No. PF-35AE

TCM®

PARTS CATALOGUE

FORKLIFT TRUCK

GAS & DIESEL POWERED

FG35T8 FD35C8,T8
FG40T8 FD40C8,T8
FG45T8 FD45C8,T8
FG50T8 FD50T8

TCM CORPORATION

ご使用のまえに

このパーツカタログは，TCM フォークリフトの構成部品を収録しています。

部品ご注文について

部品ご注文の際は，必ず車両の形式・仕様・製造番号（号車），部品番号および注文数を明示してください。車両の製造番号（号車）は車両銘板に表示しています。

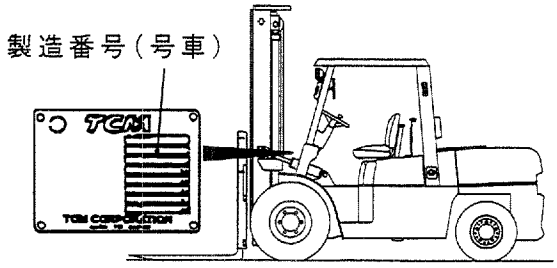

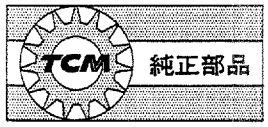

部品は，必ず「TCM 純正部品」をご使用ください。
純正部品以外の部品をご使用になり，故障が発生した場合は保証できません。

ご使用について

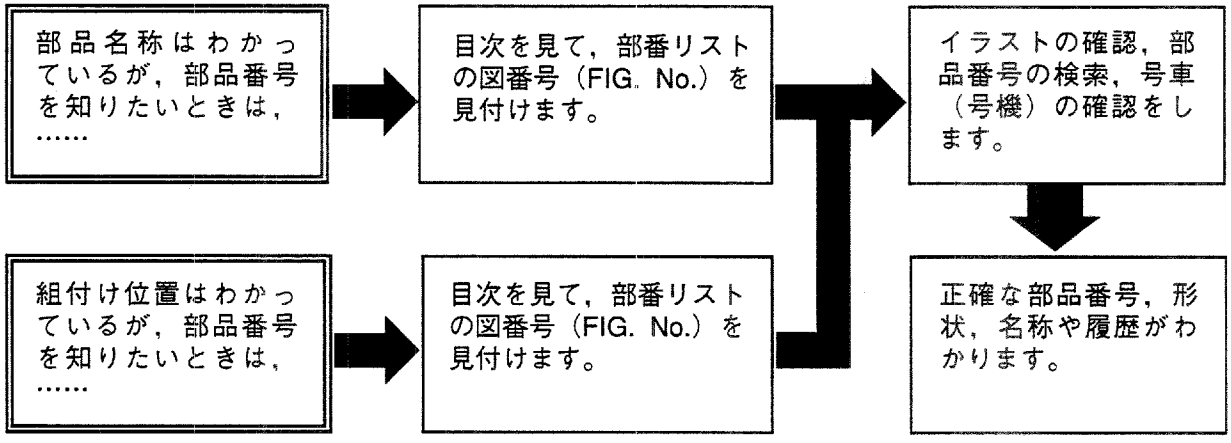

略語および記号

ＡＳＳＹ	組立品を示します。
ＲＨ	車両の前方向に向かって右側を示します。
ＬＨ	車両の前方向に向かって左側を示します。
ＡＲ	必要に応じた数を使用します。
＊	セットおよびキットの販売部品を示します。
Ｔ	厚みを示します。
＋	図示していません。
♯	単体販売しません。

部品は，品質向上のため予告なく変更することがありますので，あらかじめご了承ください。
詳細は，TCM 指定整備工場にご相談ください。

INTRODUCTION

This Parts Catalogue contains the component parts of the **TCM FORKLIFT TRUCK**.

How to order parts

When ordering, be sure to specify the model name, specification and serial number (machine number) of your machine, as well as the part number and desired quantity for each part. The machine serial number (machine number) is indicated on the machine name plate.

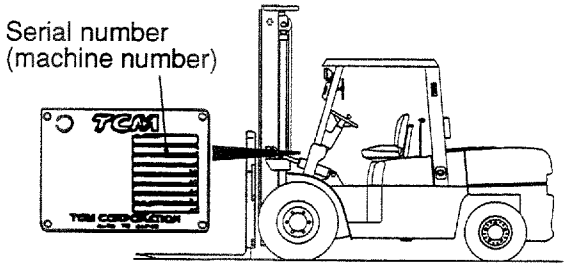

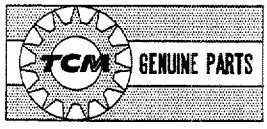

Always use "TCM's Genuine Parts". We cannot guarantee any loss or trouble attributable to other parts than ours.

How to use the Parts Catalogue

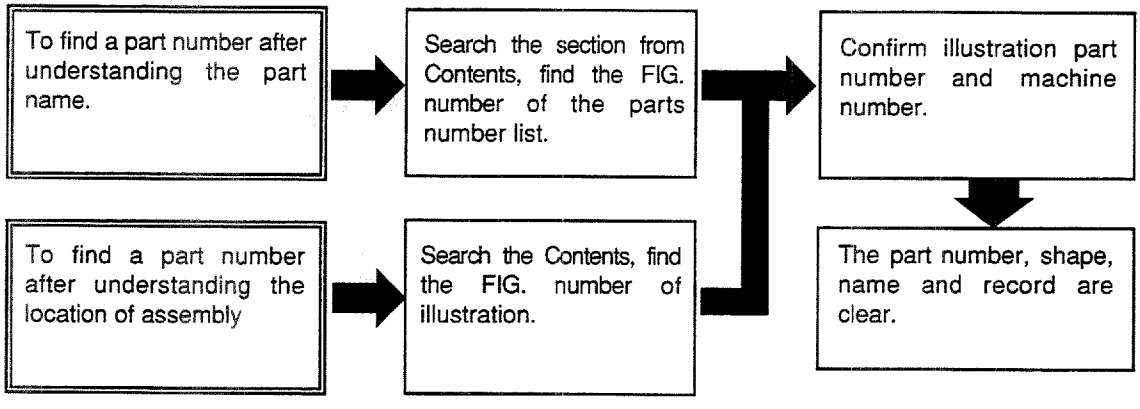

Abbreviations and symbols

ASSY ···	Assembled unit.
RH ·····	Right-hand when viewed forward on the truck.
LH ·····	Left-hand when viewed forward on the truck.
AR ·····	Quantity required.
* ·····	The marketable part set or kit.
T ·····	Thickness.
+ ·····	Not illustrated.
# ·····	Not sold separately.

Materals and specifications subject to change without notice.

CONTENTS 目次

CHASSIS シャーシ

A	FD35C8	D	FD40T8	G	FD50T8	K	FG45T8
B	FD35T8	E	FD45C8	H	FG35T8	L	FG50T8
C	FD40C8	F	FD45T8	J	FG40T8		

SECTION 部門	A	B	C	D	E	F	G	H	J	K	L	FIG. NO.
ENGINE MOUNT ｴﾝｼﾞﾝﾏｳﾝﾄ	○	○	○	○	○	○	○					1
ENGINE MOUNT ｴﾝｼﾞﾝﾏｳﾝﾄ								○	○	○	○	2
AIR CLEANER ｴｱｰｸﾘｰﾅ	○	○	○	○	○	○	○	○	○	○	○	3
AIR CLEANER [ADE/SCBAC] ｴｱｰｸﾘｰﾅ	○	○	○	○	○	○	○	○	○	○	○	4
AIR CLEANER [AC] ｴｱｰｸﾘｰﾅ	○	○	○	○	○	○	○					5
AIR CLEANER [EXA] ｴｱｰｸﾘｰﾅ								○	○	○	○	6
COOLING UNIT ｸｰﾘﾝｸﾞﾕﾆｯﾄ	○	○	○	○	○	○	○					7
COOLING UNIT ｸｰﾘﾝｸﾞﾕﾆｯﾄ								○	○	○	○	8
FUEL SYSTEM ﾌｭｰｴﾙｼｽﾃﾑ	○	○	○	○	○	○	○					9
FUEL SYSTEM ﾌｭｰｴﾙｼｽﾃﾑ								○	○	○	○	10
FUEL SYSTEM [EXA] ﾌｭｰｴﾙｼｽﾃﾑ		○		○		○	○					11
FUEL SYSTEM [EXA] ﾌｭｰｴﾙｼｽﾃﾑ								○	○	○	○	12
EXHAUST SYSTEM ｴｷｿﾞｰｽﾄｼｽﾃﾑ	○	○	○	○	○	○	○					13
EXHAUST SYSTEM ｴｷｿﾞｰｽﾄｼｽﾃﾑ								○	○	○	○	14
TAIL PIPE UPSIDE [TUE] ﾃｰﾙﾊﾟｲﾌﾟｱｯﾌﾟｻｲﾄﾞ	○	○	○	○	○	○	○	○	○	○	○	15
TAIL PIPE UPSIDE [TUE/SCB] ﾃｰﾙﾊﾟｲﾌﾟｱｯﾌﾟｻｲﾄﾞ	○	○	○	○	○	○	○	○	○	○	○	16
COMBINATION METER ｺﾝﾋﾞﾈｰｼｮﾝﾒｰﾀ	○	○	○	○	○	○	○	○	○	○	○	17
ELECTRIC PARTS (C-TYPE) ｴﾚｸﾄﾘｯｸﾊﾟｰﾂ	○		○		○							18
ELECTRIC PARTS (T-TYPE) ｴﾚｸﾄﾘｯｸﾊﾟｰﾂ		○		○		○	○					19
ELECTRIC PARTS ｴﾚｸﾄﾘｯｸﾊﾟｰﾂ								○	○	○	○	20
ELECTRIC PARTS (COVER) ｴﾚｸﾄﾘｯｸﾊﾟｰﾂ(ｶﾊﾞｰ)	○	○	○	○	○	○	○	○	○	○	○	21

CONTENTS 目次

CHASSIS シャーシ

A	FD35C8	D	FD40T8	G	FD50T8	K	FG45T8
B	FD35T8	E	FD45C8	H	FG35T8	L	FG50T8
C	FD40C8	F	FD45T8	J	FG40T8		

SECTION 部門	A	B	C	D	E	F	G	H	J	K	L	FIG. NO.
LIGHT UNIT ライトユニット	○	○	○	○	○	○	○	○	○	○	○	22
CONTROL UNIT コントロールユニット						○	○			○	○	23
SPEED METER (C-TYPE)[SM][SM/DEF] スピードメータ	○		○		○							24
SPEED METER (T-TYPE)[SM][SM/RRL][SM/DEF] スピードメータ		○		○		○	○	○	○	○	○	25
OK-MONITOR WIRING [OKM][OKM/TTM] OKモニタワイヤリング	○	○	○	○	○	○	○	○	○	○	○	26
HEAD LIGHT [RWLR][RWLL][RWL2] ヘッドライト	○	○	○	○	○	○	○	○	○	○	○	27
ROAD REGULATION [RRL][RRL/TUE] ロードレギュレーション	○	○	○	○	○	○	○	○	○	○	○	28
ROAD EGULATION[HC/RRE][RRE/(CRH,RW,CRO,CRC)][RRE/(LPG,LPO)] ロードレギュレーション	○	○	○	○	○	○	○	○	○	○	○	29
ROAD REGULATION [SCB/RRE] ロードレギュレーション	○	○	○	○	○	○	○	○	○	○	○	30
REAR WORKING LIGHT [RWLR][RWLL] リヤーワーキングライト	○	○	○	○	○	○	○	○	○	○	○	31
REAR WORKING LIGHT [RWL2] リヤーワーキングライト	○	○	○	○	○	○	○	○	○	○	○	32
REVOLVING LIGHT [RLY][RLR] リボルビングライト	○	○	○	○	○	○	○	○	○	○	○	33
BACK BUZZER [BBA] バックブザー	○	○	○	○	○	○	○	○	○	○	○	34
CAR HEATER SYSTEM [HR] カーヒータシステム	○	○	○	○	○	○	○					35
CAR HEATER SYSTEM [HR] カーヒータシステム		○		○		○	○					36
CAR HEATER UNIT [HR] カーヒータユニット	○	○	○	○	○	○	○					37
AMMETER [AM] アンメータ	○	○	○	○	○	○	○	○	○	○	○	38
TORQUE CONVERTER PRESSURE METER [TPM] トルクコンバータプレッシャメータ		○		○		○	○	○	○	○	○	39
CONTROL UNIT [EXE,EXN] コントロールユニット		○		○		○	○	○	○	○	○	40
DRIVE UNIT MOUNT (C-TYPE) ドライブユニットマウント	○		○		○							41
DRIVE UNIT MOUNT (T-TYPE) ドライブユニットマウント		○		○		○	○	○	○	○	○	42

CONTENTS 目次

CHASSIS シャーシ

A	FD35C8	D	FD40T8	G	FD50T8	K	FG45T8
B	FD35T8	E	FD45C8	H	FG35T8	L	FG50T8
C	FD40C8	F	FD45T8	J	FG40T8		

SECTION 部門	A	B	C	D	E	F	G	H	J	K	L	FIG. NO.
DRIVE UNIT (1/3) (C-TYPE) ﾄﾞﾗｲﾌﾞﾕﾆｯﾄ(1/3)	○		○		○							43
DRIVE UNIT (2/3) (C-TYPE) ﾄﾞﾗｲﾌﾞﾕﾆｯﾄ(2/3)	○		○		○							44
DRIVE UNIT (3/3) (C-TYPE) ﾄﾞﾗｲﾌﾞﾕﾆｯﾄ(3/3)	○		○		○							45
DRIVE UNIT (1/2) (T-TYPE) ﾄﾞﾗｲﾌﾞﾕﾆｯﾄ(1/2)		○		○				○	○			46
DRIVE UNIT (2/2) (T-TYPE) ﾄﾞﾗｲﾌﾞﾕﾆｯﾄ(2/2)		○		○				○	○			47
DRIVE UNIT (1/2) (T-TYPE) ﾄﾞﾗｲﾌﾞﾕﾆｯﾄ(1/2)						○	○			○	○	48
DRIVE UNIT (2/2) (T-TYPE) ﾄﾞﾗｲﾌﾞﾕﾆｯﾄ(2/2)						○	○			○	○	49
MAIN SHAFT (C-TYPE) ﾒｲﾝｼｬﾌﾄ	○		○		○							50
CLUTCH PAC (T-TYPE) ｸﾗｯﾁﾊﾟｯｸ		○		○				○	○			51
CLUTCH PAC (FIRST)(T-TYPE) ｸﾗｯﾁﾊﾟｯｸ						○	○			○	○	52
CLUTCH PAC (SECOND)(T-TYPE) ｸﾗｯﾁﾊﾟｯｸ						○	○			○	○	53
CONTROL VALVE (T-TYPE) ｺﾝﾄﾛｰﾙﾊﾞﾙﾌﾞ		○		○				○	○			54
CONTROL VALVE (T-TYPE) ｺﾝﾄﾛｰﾙﾊﾞﾙﾌﾞ						○	○			○	○	55
CHARGING PUMP (T-TYPE) ﾁｬｰｼﾞﾝｸﾞﾎﾟﾝﾌﾟ		○		○		○	○	○	○	○	○	56
TRANSMISSION CONTROL (C-TYPE) ﾄﾗﾝｽﾐｯｼｮﾝｺﾝﾄﾛｰﾙ	○		○		○							57
DRIVE AXLE ﾄﾞﾗｲﾌﾞｱｸｽﾙ	○	○	○	○				○	○			58
DRIVE AXLE ﾄﾞﾗｲﾌﾞｱｸｽﾙ					○	○	○			○	○	59
DIFFERENTIAL ﾃﾞｨﾌｧﾚﾝｼｬﾙ	○	○	○	○	○	○	○	○	○	○	○	60
WHEEL BRAKE ﾎｲｰﾙﾌﾞﾚｰｷ	○	○	○	○				○	○			61
WHEEL BRAKE ﾎｲｰﾙﾌﾞﾚｰｷ	○	○	○	○				○	○			61A
WHEEL BRAKE ﾎｲｰﾙﾌﾞﾚｰｷ					○	○	○			○	○	62

CONTENTS 目次

CHASSIS シャーシ

A	FD35C8	D	FD40T8	G	FD50T8	K	FG45T8
B	FD35T8	E	FD45C8	H	FG35T8	L	FG50T8
C	FD40C8	F	FD45T8	J	FG40T8		

SECTION 部門	A	B	C	D	E	F	G	H	J	K	L	FIG. NO.
F/R SWITCH F/Rスイッチ		O		O		O	O	O	O	O	O	63
STEERING WHEEL UNIT ステアリング゛ホイールユニット	O	O	O	O	O	O	O	O	O	O	O	64
GEAR BOX MOUNT [JPN][PSS/(EXA,EXC,EXD,EXE,EXH,EXN)] ギ゛ヤーボ゛ックスマウント	O	O	O	O	O	O	O	O	O	O	O	65
ORBITROL MOUNT [OBT] オーヒ゛ットロールマウント	O	O	O	O	O	O	O	O	O	O	O	66
ORBITROL [OBT] オーヒ゛ットロール	O	O	O	O	O	O	O	O	O	O	O	67
STEERING WHEEL ステアリング゛ホイール	O	O	O	O	O	O	O	O	O	O	O	68
DRAG LINK [JPN][PSS/(EXA,EXC,EXD,EXE,EXH,EXN)] ト゛ラッグ゛リンク	O	O	O	O	O	O	O	O	O	O	O	69
STEERING AXLE [JPN][PSS/(EXA,EXC,EXD,EXE,EXH,EXN)] ステアリング゛アクスル	O	O	O	O	O	O	O	O	O	O	O	70
STEERING AXLE [OBT] ステアリング゛アクスル	O	O	O	O	O	O	O	O	O	O	O	71
FENDER & HUB NUT フェンタ゛ & ハフ゛ナット	O	O	O	O	O	O	O	O	O	O	O	72
FRONT WHEEL フロントホイール	O	O	O	O	O	O	O	O	O	O	O	73
FRONT WHEEL [TJF][TJF30][TF][TF82] フロントホイール	O	O	O	O	O	O	O	O	O	O	O	74
FRONT WHEEL [TUF][TUJF][TUJF30] フロントホイール	O	O	O	O	O	O	O	O	O	O	O	75
FRONT WHEEL [TUSF][TUWF][TUGF] フロントホイール	O	O	O	O	O	O	O	O	O	O	O	76
FRONT WHEEL [DD/TW,TJW][SDD/TW82,TJW82] フロントホイール	O	O	O	O	O	O	O	O	O	O	O	77
FRONT WHEEL [TUJW][TUSW][TUWW][TUGR] フロントホイール	O	O	O	O	O	O	O	O	O	O	O	78
REAR WHEEL [STD] リヤーホイール	O	O	O	O	O	O	O	O	O	O	O	79
REAR WHEEL [TR][TJR] リヤーホイール	O	O	O	O	O	O	O	O	O	O	O	80
REAR WHEEL [TUR][TUJR] リヤーホイール	O	O	O	O	O	O	O	O	O	O	O	81
REAR WHEEL [TUSR][TUWR][TUGR] リヤーホイール	O	O	O	O	O	O	O	O	O	O	O	82
POWER CYLINDER [JPN][EXA/PSS,EXC/PSS,EXE/PSS,EXN/PSS] パ゜ワーシリンタ゛	O	O	O	O	O	O	O	O	O	O	O	83

CONTENTS 目次

CHASSIS シャーシ

A	FD35C8	D	FD40T8	G	FD50T8	K	FG45T8
B	FD35T8	E	FD45C8	H	FG35T8	L	FG50T8
C	FD40C8	F	FD45T8	J	FG40T8		

SECTION 部門	A	B	C	D	E	F	G	H	J	K	L	FIG. NO.
POWER CYLINDER [OBT] ﾊﾟﾜｰｼﾘﾝﾀﾞ	○	○	○	○	○	○	○	○	○	○	○	84
OVERHEAD GUARD ｵｰﾊﾞﾍｯﾄﾞｶﾞｰﾄﾞ	○	○	○	○	○	○	○	○	○	○	○	85
OVERHEAD GUARD [HG/ZZZ] ｵｰﾊﾞﾍｯﾄﾞｶﾞｰﾄﾞ	○	○	○	○	○	○	○	○	○	○	○	86
ACCEL PEDAL ｱｸｾﾙﾍﾟﾀﾞﾙ	○	○	○	○	○	○	○	○	○	○	○	87
ACCEL PEDAL [EXN] ｱｸｾﾙﾍﾟﾀﾞﾙ	○	○	○	○	○	○	○	○	○	○	○	88
CLUTCH & BRAKE PEDAL (C-TYPE) ｸﾗｯﾁ & ﾌﾞﾚｰｷﾍﾟﾀﾞﾙ	○		○		○							89
BRAKE & INCHING PEDAL (T-TYPE) ﾌﾞﾚｰｷ & ｲﾝﾁﾝｸﾞﾍﾟﾀﾞﾙ		○		○		○	○	○	○	○	○	90
CLUTCH RELEASE CYLINDER (C-TYPE) ｸﾗｯﾁﾘﾘｰｽｼﾘﾝﾀﾞ	○		○		○							91
BRAKE BOOSTER ﾌﾞﾚｰｷﾌﾞｰｽﾀ	○	○	○	○	○	○	○	○	○	○	○	92
CLUTCH BOOSTER (C-TYPE) ｸﾗｯﾁﾌﾞｰｽﾀ	○		○		○							93
BRAKE LEVER ﾌﾞﾚｰｷﾚﾊﾞｰ	○	○	○	○	○	○	○	○	○	○	○	94
FRAME ﾌﾚｰﾑ	○	○	○	○	○	○	○	○	○	○	○	95
OIL TANK ｵｲﾙﾀﾝｸ	○	○	○	○	○	○	○	○	○	○	○	96
FUEL TANK ﾌｭｰｴﾙﾀﾝｸ	○	○	○	○	○	○	○	○	○	○	○	97
BALANCE WEIGHT ﾊﾞﾗﾝｽｳｴｲﾄ	○	○	○	○	○	○	○	○	○	○	○	98
FRONT GUARD ﾌﾛﾝﾄｶﾞｰﾄﾞ	○	○	○	○	○	○	○	○	○	○	○	99
BONNET ﾎﾞﾝﾈｯﾄ	○	○	○	○	○	○	○	○	○	○	○	100
RADIATOR COVER ﾗｼﾞｴｰﾀｶﾊﾞｰ	○	○	○	○	○	○	○	○	○	○	○	101
RADIATOR COVER [SCB001][AC][SCBAC][TUE/SCB] ﾗｼﾞｴｰﾀｶﾊﾞｰ	○	○	○	○	○	○	○	○	○	○	○	102
FLOOR BOARD ﾌﾛｱﾎﾞｰﾄﾞ	○	○	○	○	○	○	○	○	○	○	○	103
SEAT ｼｰﾄ	○	○	○	○	○	○	○	○	○	○	○	104

CONTENTS 目次

CHASSIS シャーシ

A	FD35C8	D	FD40T8	G	FD50T8	K	FG45T8
B	FD35T8	E	FD45C8	H	FG35T8	L	FG50T8
C	FD40C8	F	FD45T8	J	FG40T8		

SECTION 部門	A	B	C	D	E	F	G	H	J	K	L	FIG. NO.
SEAT シート	○	○	○	○	○	○	○	○	○	○	○	104A
SEAT [EXA] シート		○		○		○	○	○	○	○	○	105
SEAT [EXA] シート							○				○	105A
SEAT [EXC,EXD,EXE,EXH,EXN] シート	○	○	○	○	○	○	○	○	○	○	○	106
SEAT [HGL] シート	○	○	○	○	○	○	○	○	○	○	○	107
PUMP DRIVING SYSTEM ポンプドライビングシステム	○	○	○	○	○	○	○	○	○	○	○	108
GEAR PUMP ギヤーポンプ	○	○	○	○	○	○	○	○	○	○	○	109
CONTROL VALVE [2SV] コントロールバルブ	○	○	○	○	○	○	○	○	○	○	○	110
CONTROL VALVE [2SV] コントロールバルブ	○	○	○	○	○	○	○	○	○	○	○	110A
CONTROL VALVE [3SV] コントロールバルブ	○	○	○	○	○	○	○	○	○	○	○	111
CONTROL VALVE [3SV] コントロールバルブ	○	○	○	○	○	○	○	○	○	○	○	111A
CONTROL VALVE [4SV] コントロールバルブ	○	○	○	○	○	○	○	○	○	○	○	112
CONTROL VALVE [4SV] コントロールバルブ	○	○	○	○	○	○	○	○	○	○	○	112A
CONTROL VALVE [5SV] コントロールバルブ	○	○	○	○	○	○	○	○	○	○	○	113
CONTROL VALVE [5SV] コントロールバルブ	○	○	○	○	○	○	○	○	○	○	○	113A
CONTROL VALVE FITTING [2SV] コントロールバルブフィッティング	○	○	○	○	○	○	○	○	○	○	○	114
CONTROL VALVE FITTING [5SV] コントロールバルブフィッティング	○	○	○	○	○	○	○	○	○	○	○	115
VALVE CONTROL [2SV] バルブコントロール	○	○	○	○	○	○	○	○	○	○	○	116
VALVE CONTROL [3SV] バルブコントロール	○	○	○	○	○	○	○	○	○	○	○	117
VALVE CONTROL [4SV] バルブコントロール	○	○	○	○	○	○	○	○	○	○	○	118
VALVE CONTROL [5SV] バルブコントロール	○	○	○	○	○	○	○	○	○	○	○	119

CONTENTS 目次

CHASSIS シャーシ

A	FD35C8	D	FD40T8	G	FD50T8	K	FG45T8
B	FD35T8	E	FD45C8	H	FG35T8	L	FG50T8
C	FD40C8	F	FD45T8	J	FG40T8		

SECTION 部門	A	B	C	D	E	F	G	H	J	K	L	FIG.NO.
INLET SECTION インレットセクション	○	○	○	○	○	○	○	○	○	○	○	120
SPOOL SECTION (LIFT) スプールセクション	○	○	○	○	○	○	○	○	○	○	○	121
SPOOL SECTION (TILT) スプールセクション	○	○	○	○	○	○	○	○	○	○	○	122
SPOOL SECTION (ATT) スプールセクション	○	○	○	○	○	○	○	○	○	○	○	123
OUTLET SECTION アウトレットセクション	○	○	○	○	○	○	○	○	○	○	○	124
HYDRAULIC LINE (MAIN)(1/4) ハイドロリックライン(メイン)(1/4)	○	○	○	○	○	○	○	○	○	○	○	125
HYDRAULIC LINE (MAIN)(2/4) ハイドロリックライン(メイン)(2/4)	○	○	○	○	○	○	○	○	○	○	○	126
HYDRAULIC LINE(MAIN)(2/4)[OBT] ハイドロリックライン(メイン)(2/4)	○	○	○	○	○	○	○	○	○	○	○	127
HYDRAULIC LINE (MAIN)(3/4) ハイドロリックライン(メイン)(3/4)	○	○	○	○	○	○	○	○	○	○	○	128
HYDRAULIC LINE (MAIN)(4/4)(C-TYPE) ハイドロリックライン(メイン)(4/4)	○		○		○							129
HYDRAULIC LINE (MAIN)(4/4)(T-TYPE) ハイドロリックライン(メイン)(4/4)		○		○		○	○	○	○	○	○	130
HYDRAULIC LINE (CLUTCH LINE)(C-TYPE) ハイドロリックライン(クラッチライン)	○		○		○							131
HYDRAULIC LINE (TOR-CON LINE)(T-TYPE) ハイドロリックライン(トルコンライン)		○		○		○	○	○	○	○	○	132
HYDRAULIC PUMP (C-TYPE) ハイドロリックポンプ	○		○		○							133
OIL COOLER [CRH][CRO][CRC] オイルクーラ	○	○	○	○	○	○	○					134
OIL COOLER-INNER PARTS [CRH][CRO][CRC] オイルクーラーインナパーツ	○	○	○	○	○	○	○					135
TILT CYLINDER ティルトシリンダ	○	○	○	○	○	○	○	○	○	○	○	136
TILT CYLINDER ティルトシリンダ	○	○	○	○	○	○	○	○	○	○	○	136A
DECAL [JPN] デカル	○	○	○	○	○	○	○	○	○	○	○	137
DECAL [EXA,EXB,EXC,EXE,EXK,EXN] デカル	○	○	○	○	○	○	○	○	○	○	○	138
SERVICE TOOLS サービスツール	○	○	○	○	○	○	○	○	○	○	○	139

CONTENTS 目次

CHASSIS シャーシ

A	FD35C8	D	FD40T8	G	FD50T8	K	FG45T8
B	FD35T8	E	FD45C8	H	FG35T8	L	FG50T8
C	FD40C8	F	FD45T8	J	FG40T8		

SECTION 部門	A	B	C	D	E	F	G	H	J	K	L	FIG. NO.
SERVICE TOOLS [EXB] サービスツール	○	○	○	○	○	○	○	○	○	○	○	140
FRONT GLASS [AW071][AW061] フロントガラス	○	○	○	○	○	○	○	○	○	○	○	141
LPG SYSTEM [LPG] LPGシステム								○	○	○	○	142
LPO SYSTEM [LPO] LPOシステム								○	○	○	○	143
LPO SYSTEM [LPO] LPOシステム								○	○	○	○	143A
CARBURATOR [LPO] キャブレタ								○	○	○	○	144
CONVERTER [LPO] コンバータ								○	○	○	○	145
CONVERTER [LPO] コンバータ								○	○	○	○	145A
LPG CONTAINER [LPG][LPO] LPGコンテナ								○	○	○	○	146
FIRE EXTINGUISHER [FE] ファイヤイクスティングイッシャ	○	○	○	○	○	○	○	○	○	○	○	147
CABIN MOUNT [SCB] キャビネットマウント	○	○	○	○	○	○	○	○	○	○	○	148
CABIN [SCB] キャビン	○	○	○	○	○	○	○	○	○	○	○	149
AIR CONDITIONER [SCB/AC] エアーコンディショナ	○	○	○	○	○	○	○					150
AIR CONDITIONER WIRING [SCB/AC] エアーコンディショナワイヤリング	○	○	○	○	○	○	○					151

CONTENTS 目次

MAST マスト

A	FD35C8	D	FD40T8	G	FD50T8	K	FG45T8
B	FD35T8	E	FD45C8	H	FG35T8	L	FG50T8
C	FD40C8	F	FD45T8	J	FG40T8		

SECTION 部門	A	B	C	D	E	F	G	H	J	K	L	FIG. NO.
[VM24T]												
FORK & LIFT BRACKET [VM24T] ﾌｫｰｸ&ﾘﾌﾄﾌﾞﾗｹｯﾄ	○	○	○	○				○	○			152
MAST [VM24T] ﾏｽﾄ	○	○	○	○				○	○			153
LAMP GUARD [(HL,HLG/HL,BKH)/VM24T] ﾗﾝﾌﾟｶﾞｰﾄﾞ	○	○	○	○				○	○			154
LAMP GUARD [(HL,BKH)/VM24T] ﾗﾝﾌﾟｶﾞｰﾄﾞ	○	○	○	○				○	○			154A
LIFT CYLINDER [VM24T] ﾘﾌﾄｼﾘﾝﾀﾞ	○	○	○	○				○	○			155
MAST PIPING [VM24T] ﾏｽﾄﾊﾟｲﾋﾟﾝｸﾞ	○	○	○	○				○	○			156
[VM24U]												
FORK & LIFT BRACKET [VM24U](FREE LIFT TYPE) ﾌｫｰｸ&ﾘﾌﾄﾌﾞﾗｹｯﾄ	○	○	○	○				○	○			157
MAST [VM24U](FREE LIFT TYPE) ﾏｽﾄ	○	○	○	○				○	○			158
LAMP GUARD [(HL,HLG/HL,BKH)/VM24U](FREE LIFT TYPE) ﾗﾝﾌﾟｶﾞｰﾄﾞ	○	○	○	○				○	○			159
LIFT CYLINDER [VM24U](FREE LIFT TYPE) ﾘﾌﾄｼﾘﾝﾀﾞ	○	○	○	○				○	○			160
MAST PIPING [VM24U](FREE LIFT TYPE) ﾏｽﾄﾊﾟｲﾋﾟﾝｸﾞ	○	○	○	○				○	○			161
[VM28C]												
FORK & LIFT BRACKET [VM28C] ﾌｫｰｸ&ﾘﾌﾄﾌﾞﾗｹｯﾄ					○	○				○		162
MAST [VM28C] ﾏｽﾄ					○	○				○		163
LAMP GUARD [(HL,HLG/HL,BKH)/VM28C] ﾗﾝﾌﾟｶﾞｰﾄﾞ					○	○				○		164
LAMP GUARD [(HL,BKH)/VM28C] ﾗﾝﾌﾟｶﾞｰﾄﾞ					○	○				○		164A
LIFT CYLINDER [VM28C] ﾘﾌﾄｼﾘﾝﾀﾞ					○	○				○		165
MAST PIPING [VM28C] ﾏｽﾄﾊﾟｲﾋﾟﾝｸﾞ					○	○				○		166

CONTENTS 目次

MAST マスト

A	FD35C8	D	FD40T8	G	FD50T8	K	FG45T8
B	FD35T8	E	FD45C8	H	FG35T8	L	FG50T8
C	FD40C8	F	FD45T8	J	FG40T8		

SECTION 部門	A	B	C	D	E	F	G	H	J	K	L	FIG. NO.
[VM28E]												
FORK & LIFT BRACKET [VM28E] ﾌｫｰｸ&ﾘﾌﾄﾌﾞﾗｹｯﾄ					○	○				○		167
MAST [VM28E](FREE LIFT TYPE) ﾏｽﾄ					○	○				○		168
LAMP GUARD [(HL,HLG/HL,BKH)/VM28E] ﾗﾝﾌﾟｶﾞｰﾄﾞ					○	○				○		169
LIFT CYLINDER [VM28E] ﾘﾌﾄｼﾘﾝﾀﾞ					○	○				○		170
MAST PIPING [VM28E] ﾏｽﾄﾊﾟｲﾋﾟﾝｸﾞ					○	○				○		171
[VM35H]												
FORK & LIFT BRACKET [VM35H] ﾌｫｰｸ&ﾘﾌﾄﾌﾞﾗｹｯﾄ							○				○	172
MAST [VM35H] ﾏｽﾄ							○				○	173
LAMP GUARD [(HL,BKH)/VM35H] ﾗﾝﾌﾟｶﾞｰﾄﾞ							○				○	174
LIFT CYLINDER [VM35H] ﾘﾌﾄｼﾘﾝﾀﾞ							○				○	175
MAST PIPING [VM35H] ﾏｽﾄﾊﾟｲﾋﾟﾝｸﾞ							○				○	176
[VFM24T]												
FORK & LIFT BRACKET [VFM24T](3CYLINDER) ﾌｫｰｸ&ﾘﾌﾄﾌﾞﾗｹｯﾄ	○	○	○	○				○	○			177
MAST [VFM24T](3CYLINDER) ﾏｽﾄ	○	○	○	○				○	○			178
LAMP GUARD [(HL,HLG/HL,BKH)/VFM24T](3CYLINDER) ﾗﾝﾌﾟｶﾞｰﾄﾞ	○	○	○	○				○	○			179
LAMP GUARD [(HL,BKH)/VFM24T](3CYLINDER) ﾗﾝﾌﾟｶﾞｰﾄﾞ	○	○	○	○				○	○			179A
LIFT CYLINDER (FRONT)[VFM24T](3CYLINDER) ﾘﾌﾄｼﾘﾝﾀﾞ	○	○	○	○				○	○			180
LIFT CYLINDER (REAR)[VFM24T](3CYLINDER) ﾘﾌﾄｼﾘﾝﾀﾞ	○	○	○	○				○	○			181
MAST PIPING [VFM24T](3CYLINDER) ﾏｽﾄﾊﾟｲﾋﾟﾝｸﾞ	○	○	○	○				○	○			182

CONTENTS 目次

MAST マスト

A	FD35C8	D	FD40T8	G	FD50T8	K	FG45T8
B	FD35T8	E	FD45C8	H	FG35T8	L	FG50T8
C	FD40C8	F	FD45T8	J	FG40T8		

SECTION 部門	A	B	C	D	E	F	G	H	J	K	L	FIG. NO.
[VFM24X]												
FORK & LIFT BRACKET [VFM24X](4 CYLINDER) ﾌｫｰｸ&ﾘﾌﾄﾌﾞﾗｹｯﾄ	○	○	○	○				○	○			183
MAST [VFM24X](4 CYLINDER) ﾏｽﾄ	○	○	○	○				○	○			184
LIFT CYLINDER (FRONT)[VFM24X](4 CYLINDER) ﾘﾌﾄｼﾘﾝﾀﾞ	○	○	○	○				○	○			185
LIFT CYLINDER (REAR)[VFM24X](4 CYLINDER) ﾘﾌﾄｼﾘﾝﾀﾞ	○	○	○	○				○	○			186
MAST PIPING [VFM24X](4 CYLINDER) ﾏｽﾄﾊﾟｲﾋﾟﾝｸﾞ	○	○	○	○				○	○			187
[VFM28C]												
FORK & LIFT BRACKET [VFM28C](3CYLINDER) ﾌｫｰｸ&ﾘﾌﾄﾌﾞﾗｹｯﾄ					○	○				○		188
MAST [VFM28C](3CYLINDER) ﾏｽﾄ					○	○				○		189
LAMP GUARD [(HL,HLG/HL,BKH)/VFM28C](3CYLINDER)(OLD PART) ﾗﾝﾌﾟｶﾞｰﾄﾞ					○	○				○		190
LAMP GUARD [(HL,BKH)/VFM28C](3CYLINDER)(NEW PART) ﾗﾝﾌﾟｶﾞｰﾄﾞ					○	○				○		190A
LIFT CYLINDER (FRONT)[VFM28C](3CYLINDER) ﾘﾌﾄｼﾘﾝﾀﾞ					○	○				○		191
LIFT CYLINDER (REAR)[VFM28C](3CYLINDER) ﾘﾌﾄｼﾘﾝﾀﾞ					○	○				○		192
MAST PIPING [VFM28C](3CYLINDER) ﾏｽﾄﾊﾟｲﾋﾟﾝｸﾞ					○	○				○		193
[VFM28E]												
FORK & LIFT BRACKET [VFM28E](4CYLINDER) ﾌｫｰｸ&ﾘﾌﾄﾌﾞﾗｹｯﾄ					○	○				○		194
MAST [VFM28E](4CYLINDER) ﾏｽﾄ					○	○				○		195
LIFT CYLINDER (FRONT)[VFM28E](4CYLINDER) ﾘﾌﾄｼﾘﾝﾀﾞ					○	○				○		196
LIFT CYLINDER (REAR)[VFM28E](4CYLINDER) ﾘﾌﾄｼﾘﾝﾀﾞ					○	○				○		197
MAST PIPING [VFM28E](4CYLINDER) ﾏｽﾄﾊﾟｲﾋﾟﾝｸﾞ					○	○				○		198

CONTENTS 目次

MAST マスト

A	FD35C8	D	FD40T8	G	FD50T8	K	FG45T8
B	FD35T8	E	FD45C8	H	FG35T8	L	FG50T8
C	FD40C8	F	FD45T8	J	FG40T8		

SECTION 部門	A	B	C	D	E	F	G	H	J	K	L	FIG. NO.
[VFM35H]												
FORK & LIFT BRACKET [VFM35H] ﾌｫｰｸ&ﾘﾌﾄﾌﾞﾗｹｯﾄ							O				O	199
MAST [VFM35H] ﾏｽﾄ							O				O	200
LAMP GUARD [(HL,BKH)/VFM35H] ﾗﾝﾌﾟｶﾞｰﾄﾞ							O				O	201
TILT GAUGE [TG/VFM35H] ﾃｨﾙﾄｹﾞｰｼﾞ							O				O	202
LIFT CYLINDER (FRONT)[VFM35H] ﾘﾌﾄｼﾘﾝﾀﾞ							O				O	203
LIFT CYLINDER (REAR)[VFM35H] ﾘﾌﾄｼﾘﾝﾀﾞ							O				O	204
MAST PIPING [VFM35H] ﾏｽﾄﾊﾟｲﾋﾟﾝｸﾞ							O				O	205
[VFHM24T]												
FORK & LIFT BRACKET [VFHM24T] ﾌｫｰｸ&ﾘﾌﾄﾌﾞﾗｹｯﾄ	O	O	O	O				O	O			206
MAST [VFHM24T] ﾏｽﾄ	O	O	O	O				O	O			207
LAMP GUARD [(HL,HLG/HL,BKH)/VFHM24T](OLD PART) ﾗﾝﾌﾟｶﾞｰﾄﾞ	O	O	O	O				O	O			208
LAMP GUARD [(HL,BKH)/VFHM24T](NEW PART) ﾗﾝﾌﾟｶﾞｰﾄﾞ	O	O	O	O				O	O			208A
LIFT CYLINDER (FRONT)[VFHM24T] ﾘﾌﾄｼﾘﾝﾀﾞ	O	O	O	O				O	O			209
LIFT CYLINDER (REAR)[VFHM24T] ﾘﾌﾄｼﾘﾝﾀﾞ	O	O	O	O				O	O			210
MAST PIPING [VFHM24T] ﾏｽﾄﾊﾟｲﾋﾟﾝｸﾞ	O	O	O	O				O	O			211

CONTENTS 目次

MAST マスト

A	FD35C8	D	FD40T8	G	FD50T8	K	FG45T8
B	FD35T8	E	FD45C8	H	FG35T8	L	FG50T8
C	FD40C8	F	FD45T8	J	FG40T8		

SECTION 部門	A	B	C	D	E	F	G	H	J	K	L	FIG. NO.
[VFHM28C]												
FORK & LIFT BRACKET [VFHM28C] ﾌｫｰｸ&ﾘﾌﾄﾌﾞﾗｹｯﾄ					○	○				○		212
MAST [VFHM28C] ﾏｽﾄ					○	○				○		213
LAMP GUARD [(HL,HLG/HL,BKH)/VFHM28C](OLD PART) ﾗﾝﾌﾟｶﾞｰﾄﾞ					○	○				○		214
LAMP GUARD [(HL,BKH)/VFHM28C](NEW PART) ﾗﾝﾌﾟｶﾞｰﾄﾞ					○	○				○		214A
LIFT CYLINDER (FRONT)[VFHM28C] ﾘﾌﾄｼﾘﾝﾀﾞ					○	○				○		215
LIFT CYLINDER (REAR)[VFHM28C] ﾘﾌﾄｼﾘﾝﾀﾞ					○	○				○		216
MAST PIPING [VFHM28C] ﾏｽﾄﾊﾟｲﾋﾟﾝｸﾞ					○	○				○		217
[VFHM35H]												
FORK & LIFT BRACKET [VFHM35H] ﾌｫｰｸ&ﾘﾌﾄﾌﾞﾗｹｯﾄ							○				○	218
MAST [VFHM35H] ﾏｽﾄ							○				○	219
LAMP GUARD [(HL,BKH)/VFHM35H] ﾗﾝﾌﾟｶﾞｰﾄﾞ							○				○	220
LIFT CYLINDER (FRONT)[VFHM35H] ﾘﾌﾄｼﾘﾝﾀﾞ							○				○	221
LIFT CYLINDER (REAR)[VFHM35H] ﾘﾌﾄｼﾘﾝﾀﾞ							○				○	222
MAST PIPING [VFHM35H] ﾏｽﾄﾊﾟｲﾋﾟﾝｸﾞ							○				○	223

FIG.1 ENGINE MOUNT

(F4041010) エンジンマウント

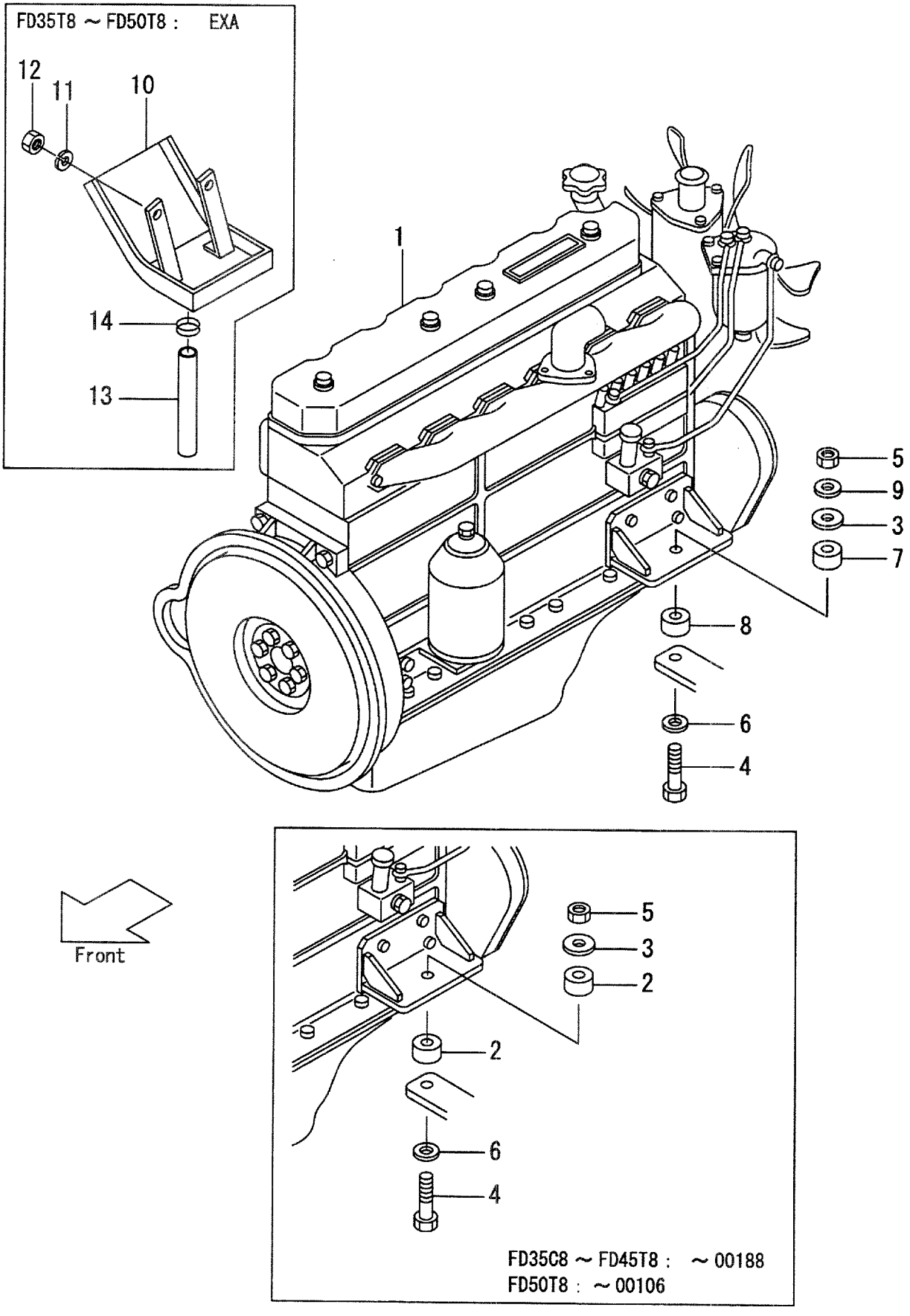

A:FD35C8 D:FD40T8 G:FD50T8 K:FG45T8
B:FD35T8 E:FD45C8 H:FG35T8 L:FG50T8
C:FD40C8 F:FD45T8 J:FG40T8

FIG.1
(F4041010)

Item No	Part No.	Mark	Description		Req'd	Remarks : Serial No.
1	235C1-00101		ENGINE,A-6BG1QC07	ｴﾝｼﾞﾝ	1	A,C,E (E.NO.-108900)
-	235C1-00102		ENGINE,A-6BG1QC07	ｴﾝｼﾞﾝ	1	A,C,E (E.NO.108901-)
-	535C3-40251		ENGINE,A-6BG1QC07	ｴﾝｼﾞﾝ	1	A,C,E [GEO40](E.NO.-108900)
-	535C3-40252		ENGINE,A-6BG1QC07	ｴﾝｼﾞﾝ	1	A,C,E [GEO40](E.NO.108901-)
-	235E1-00101		ENGINE,A-6BG1QC05	ｴﾝｼﾞﾝ	1	B,D,F,G
-	535E2-70101		ENGINE,A-6BG1QC06	ｴﾝｼﾞﾝ	1	B,D,F:1-529 G:1-179 [EXA][EXE]
-	535E2-70102		ENGINE,A-6BG1QC06	ｴﾝｼﾞﾝ	1	B,D,F:530- G:180- [EXA][EXE]
-	535E3-40251		ENGINE,A-6BG1QC08	ｴﾝｼﾞﾝ	1	B,D,F:1-529 G:1-179 [EXN][GEO40]
-	535E3-40252		ENGINE,A-6BG1QC08	ｴﾝｼﾞﾝ	1	B,D,F:530- G:180- [EXN][GEO40]
-	535C6-60101		ENGINE,A-6BG1QC07	ｴﾝｼﾞﾝ	1	A,C,E:949- [RADPF](E.NO.-108900)
	535C6-60102		ENGINE,A-6BG1QC07	ｴﾝｼﾞﾝ	1	A,C,E:949- [RADPF](E.NO.108901-)
-	535E6-60101		ENGINE,A-6BG1QC05	ｴﾝｼﾞﾝ	1	B,D,F:949- G:251- [RADPF]
-	535E6-60201		ENGINE,A-6BG1QC06	ｴﾝｼﾞﾝ	1	B,D,F:949- G:251- [EXA/RADPF][EXE/RADPF]
-	535C6-60151		ENGINE,A-6BG1QC07	ｴﾝｼﾞﾝ	1	A,C,E:949- [GEO40/RADPF](E.NO.-108900)
	535C6-60152		ENGINE,A-6BG1QC07	ｴﾝｼﾞﾝ	1	A,C,E:949- [GEO40/RADPF](E.NO.108901-)
-	535E6-60151		ENGINE,A-6BG1QC08	ｴﾝｼﾞﾝ	1	B,D,F:949- G:251- [GEO40/RADPF][EXN/RADPF]
2	235C1-02051		CUSHION	ｸｯｼｮﾝ	4	A,B,C,D,E,F:1-188 G:1-106
3	235C1-02061		PLATE	ﾌﾟﾚｰﾄ	2	A,B,C,D,E,F,G
4	235C1-02071		BOLT	ﾎﾞﾙﾄ	2	A,B,C,D,E,F,G
5	256C2-92021		NUT	ﾅｯﾄ	2	A,B,C,D,E,F,G
6	02000-00016		WASHER	ﾜｯｼｬ	2	A,B,C,D,E,F,G
7	235C1-02051		CUSHION	ｸｯｼｮﾝ	2	A,B,C,D,E,F:189- G:107-
8	235C1-02151		CUSHION	ｸｯｼｮﾝ	2	A,B,C,D,E,F:189- G:107-

FIG.1 ENGINE MOUNT

(F4041010) エンジンマウント

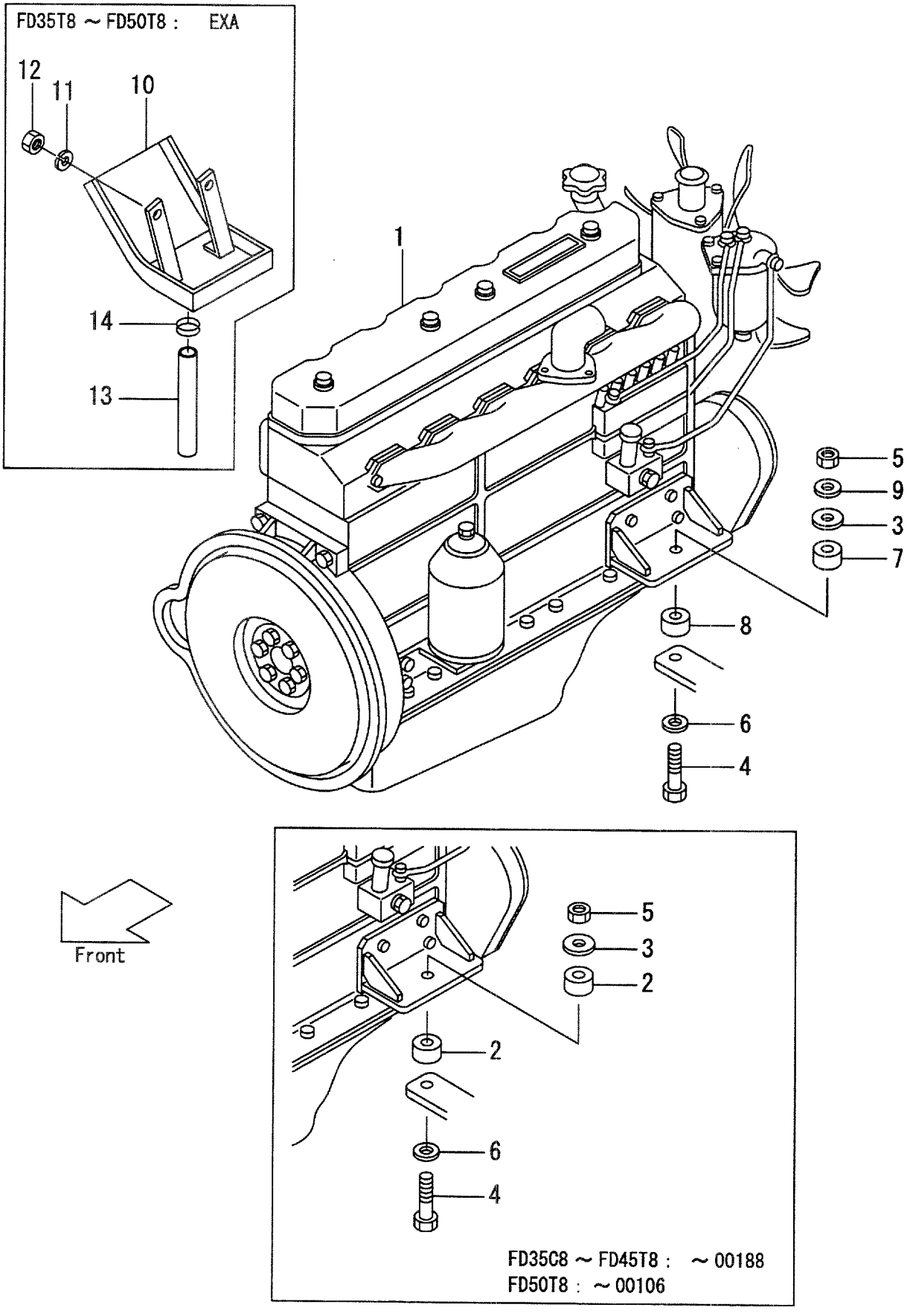

A:FD35C8 D:FD40T8 G:FD50T8 K:FG45T8
B:FD35T8 E:FD45C8 H:FG35T8 L:FG50T8
C:FD40C8 F:FD45T8 J:FG40T8

FIG.1
(F4041010)

Item No	Part No.	Mark	Description		Req'd	Remarks : Serial No.
9	23200-72221		WASHER	ﾜｯｼｬ	2	A,B,C,D,E,F:246- G:128-
10	524W2-72401		DRIP,OIL	ﾄﾞﾘｯﾌﾟ	1	B,D,F,G [EXA]
11	02010-00008		WASHER	ﾜｯｼｬ	1	B,D,F,G [EXA]
12	01400-00008		NUT	ﾅｯﾄ	1	B,D,F,G [EXA]
13	04710-04050		HOSE	ﾎｰｽ	1	B,D,F,G [EXA]
14	04911-00022		CLIP	ｸﾘｯﾌﾟ	1	B,D,F,G [EXA]
15	530C3-40501	+	WIRE,LEAD	ﾜｲﾔ	1	B,D,F,G [EXN][GEO40]

FIG.2 ENGINE MOUNT

(F4041020) エンジンマウント

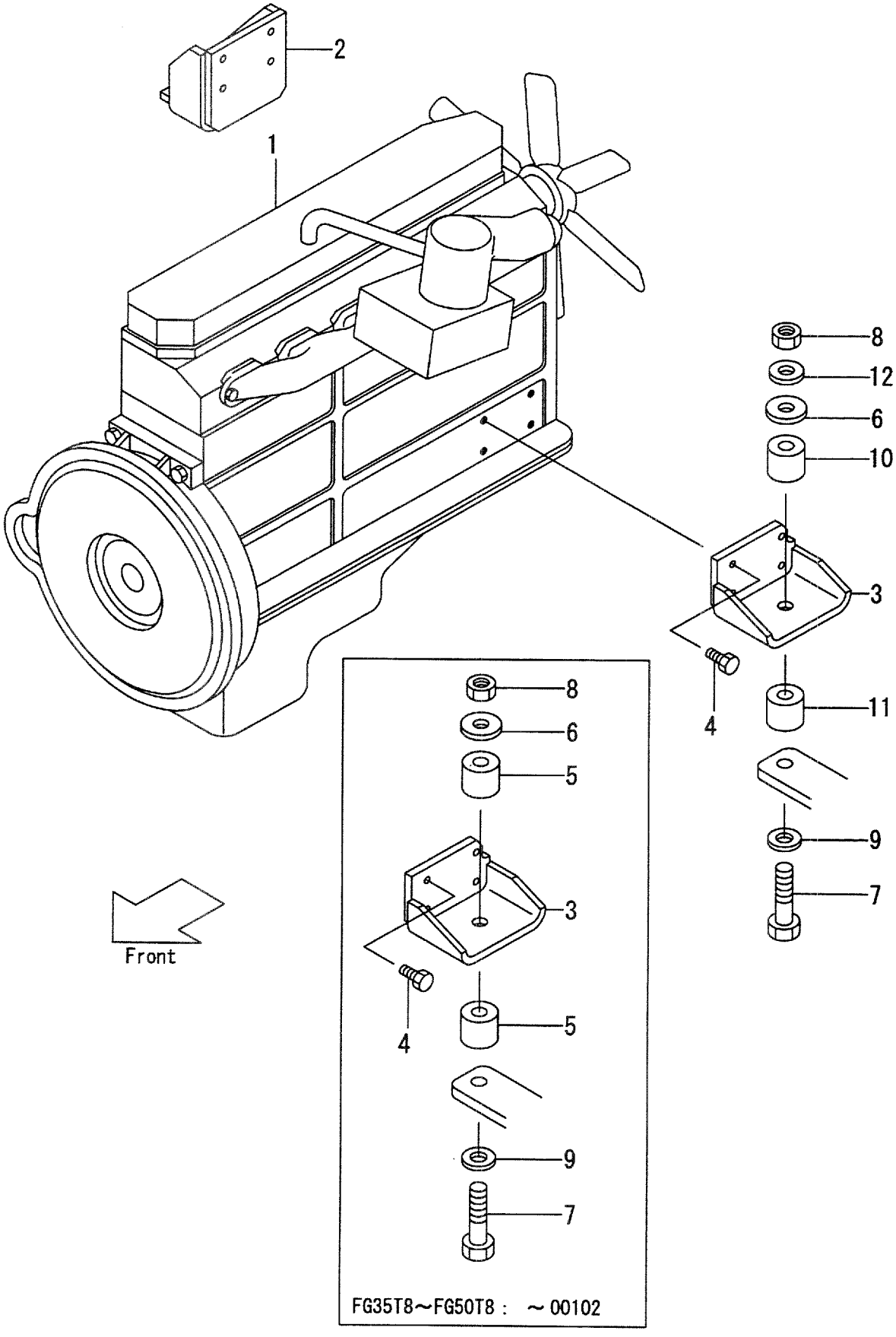

A:FD35C8 D:FD40T8 G:FD50T8 K:FG45T8
B:FD35T8 E:FD45C8 H:FG35T8 L:FG50T8
C:FD40C8 F:FD45T8 J:FG40T8

FIG.2
(F4041020)

Item No	Part No.	Mark	Description		Req'd	Remarks : Serial No.
1	235L1-00101		ENGINE,TB42KA4GR60	ｴﾝｼﾞﾝ	1	H,J,K,L
-	535L3-40251		ENGINE,TB42	ｴﾝｼﾞﾝ	1	H,J,K,L [GE040][SCB001]
2	235L1-00011		BRACKET,RH	ﾌﾞﾗｹｯﾄ	1	H,J,K,L
3	223W1-00112		BRACKET,LH	ﾌﾞﾗｹｯﾄ	1	H,J,K,L
4	01212-12030		BOLT	ﾎﾞﾙﾄ	8	H,J,K,L
5	235C1-02051		CUSHION	ｸｯｼｮﾝ	4	H,J,K,L:1-102
6	235C1-02061		PLATE	ﾌﾟﾚｰﾄ	2	H,J,K,L
7	235C1-02071		BOLT	ﾎﾞﾙﾄ	2	H,J,K,L
8	256C2-92021		NUT	ﾅｯﾄ	2	H,J,K,L
9	02000-00016		WASHER	ﾜｯｼｬ	2	H,J,K,L
10	235C1-02051		CUSHION	ｸｯｼｮﾝ	2	H,J,K,L:103-
11	235C1-02151		CUSHION	ｸｯｼｮﾝ	2	H,J,K,L:103-
12	23200-72221		WASHER	ﾜｯｼｬ	2	H,J,K:106- L:103-
13	535L3-40501	+	WIRE,LEAD	ﾜｲﾔ	1	H,J,K,L [GE040][SCB001]

FIG.3 AIR CLEANER

(F4041030) エアークリーナ

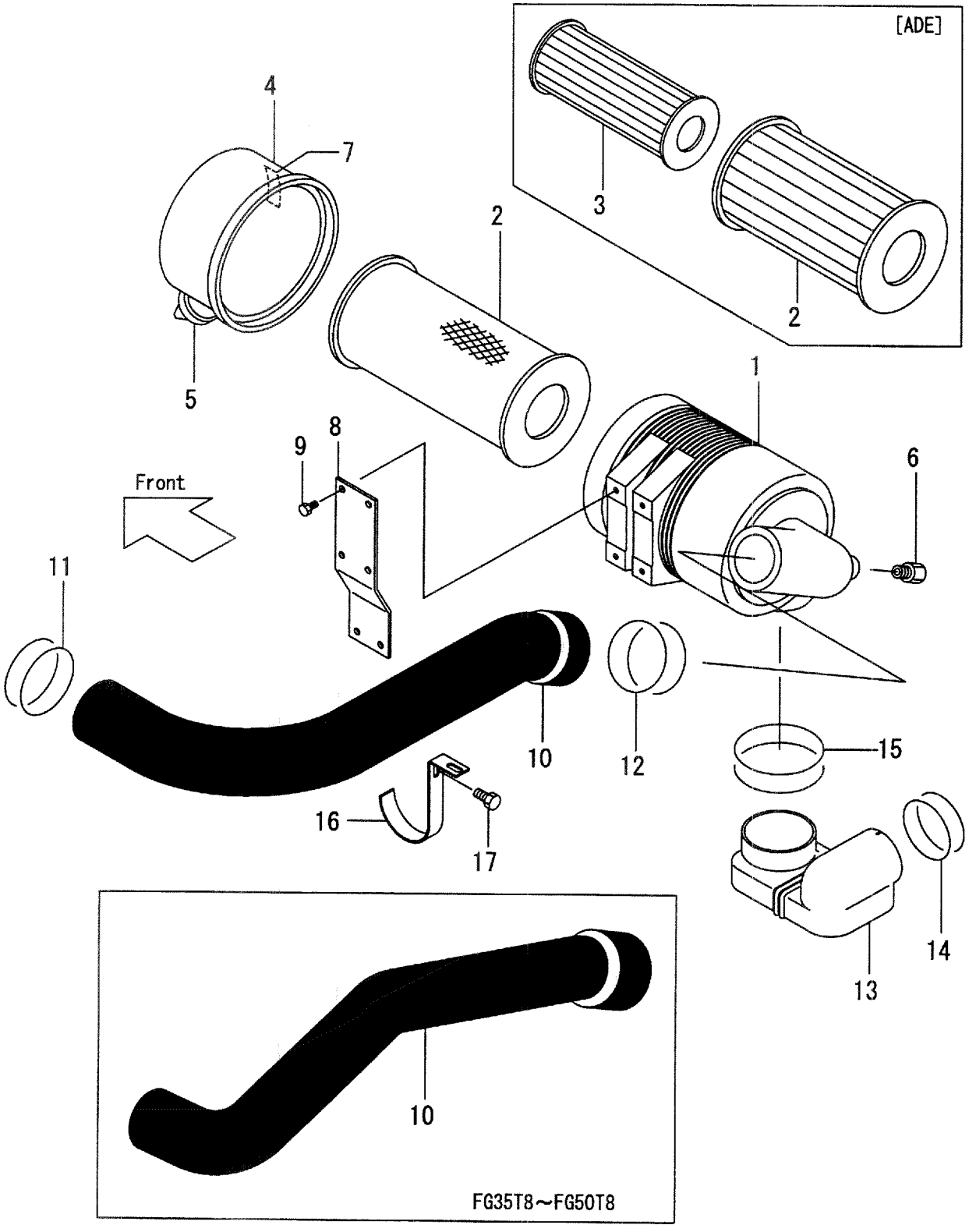

A:FD35C8 D:FD40T8 G:FD50T8 K:FG45T8
B:FD35T8 E:FD45C8 H:FG35T8 L:FG50T8
C:FD40C8 F:FD45T8 J:FG40T8

FIG.3
(F4041030)

Item No	Part No.	Mark	Description		Req'd	Remarks : Serial No.
A1	235C1-00301		CLEANER-ASSY,AIR	ｸﾘｰﾅｱｯｾﾝ	1	INC.1-5
-	535C0-60001		CLEANER-ASSY,AIR	ｸﾘｰﾅｱｯｾﾝ	1	[ADE] INC.1-7
1	235C1-02211		BODY	ﾎﾞﾃﾞｨ	1	
2	230C1-02061		ELEMENT	ｴﾚﾒﾝﾄ	1	
-	26402-37011		ELEMENT	ｴﾚﾒﾝﾄ	1	[ADE]
3	530C0-62011		ELEMENT	ｴﾚﾒﾝﾄ	1	[ADE]
4	230C1-02071		COVER	ｶﾊﾞｰ	1	
5	230C1-02081		VALVE	ﾊﾞﾙﾌﾞ	1	
6	230C1-02091		INDICATOR	ｲﾝｼﾞｹｰﾀ	1	
7	530C0-62021		MARKING	ﾏｰｷﾝｸﾞ	1	[ADE]
8	235C1-00371		BRACKET	ﾌﾞﾗｹｯﾄ	1	A,B,C,D,E,F:108- G:102- H,J,K,L:103-
9	01185-08016		BOLT	ﾎﾞﾙﾄ	4	A,B,C,D,E,F:1-107 G:1-101 H,J,K,L:1-102
-	01185-08016		BOLT & WASHER	ﾎﾞﾙﾄ&ﾜｯｼｬ	6	A,B,C,D,E,F:108- G:102- H,J,K,L:103-
10	235C1-00311		HOSE,AC-E/G	ﾎｰｽ	1	A,B,C,D,E,F,G
-	235L1-02021		HOSE,AC-E/G	ﾎｰｽ	1	H,J,K,L
-	535E2-72151		HOSE,AC-E/G	ﾎｰｽ	1	A,B,C,D,E,F,G [EXA]
11	04911-00095		CLIP	ｸﾘｯﾌﾟ	1	A,B,C,D,E,F,G
-	04911-00090		CLIP	ｸﾘｯﾌﾟ	1	H,J,K,L
12	04911-00105		CLIP	ｸﾘｯﾌﾟ	1	A,B,C,D,E,F:1-188 G:1-106 H,J,K,L:1-102
-	04911-00110		CLIP	ｸﾘｯﾌﾟ	1	A,B,C,D,E,F:189- G:107- H,J,K,L:103-
13	235C1-00351		PIPE,HG-AC	ﾊﾟｲﾌﾟ	1	
14	04911-00080		CLIP	ｸﾘｯﾌﾟ	1	A,B,C,D,E,F:1-449 G:1-165 H,J,K:1-155 L:1-105
-	04911-00085		CLIP	ｸﾘｯﾌﾟ	1	A,B,C,D,E,F:450- G:166- H,J,K:156- L:106-
15	04911-00100		CLIP	ｸﾘｯﾌﾟ	1	A,B,C,D,E,F:111- G:102- H,J,K,L:103-
16	235C1-02031		SUPPORT	ｻﾎﾟｰﾄ	1	A,B,C,D,E,F:111- G:102- H,J,K,L:103-
17	01183-08016		BOLT & WASHER	ﾎﾞﾙﾄ&ﾜｯｼｬ	1	A,B,C,D,E,F:111- G:102- H,J,K,L:103-

FIG.4 AIR CLEANER [ADE/SCBAC]

(F4041040) エアークリーナ

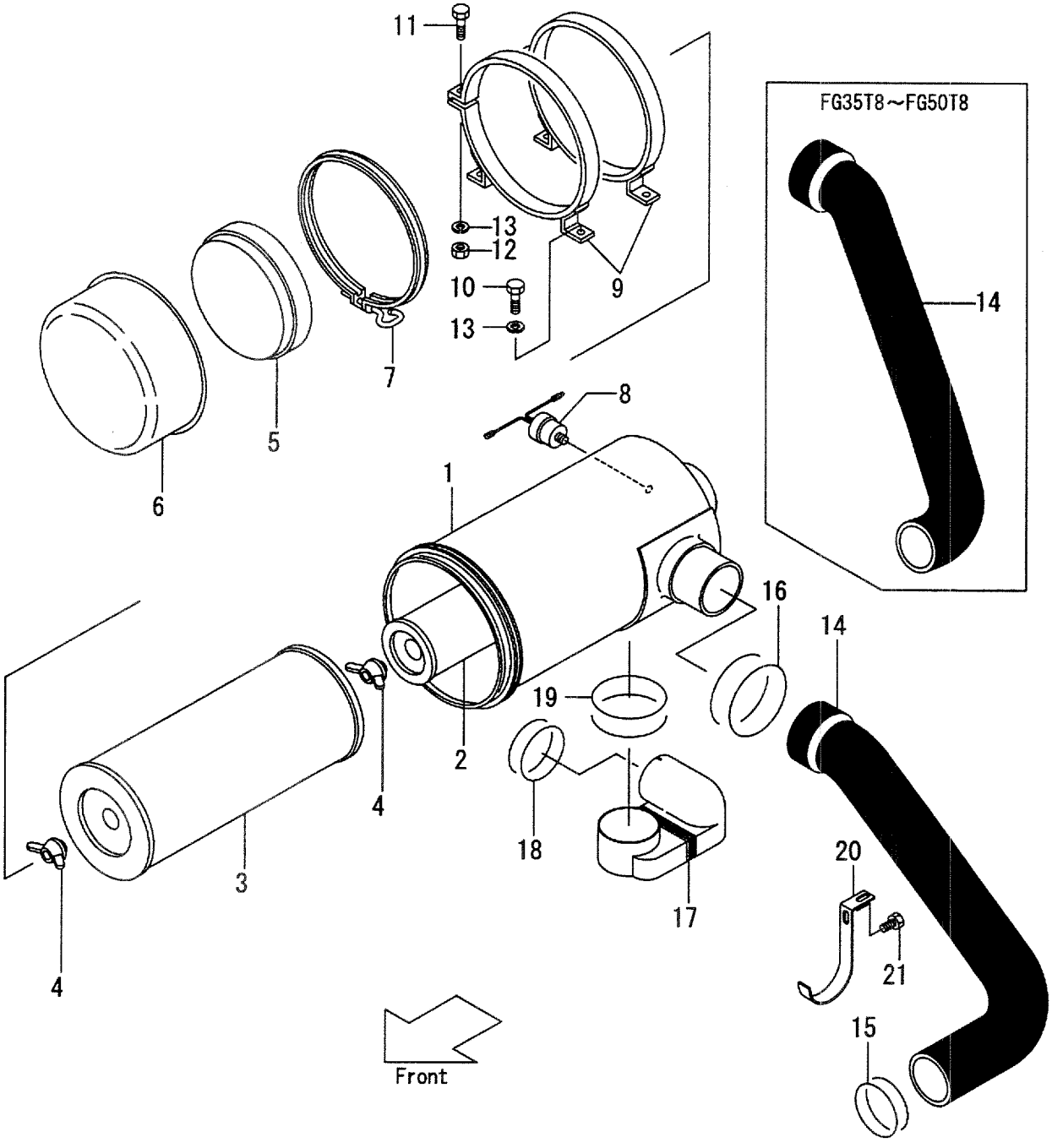

A:FD35C8 D:FD40T8 G:FD50T8 K:FG45T8
B:FD35T8 E:FD45C8 H:FG35T8 L:FG50T8
C:FD40C8 F:FD45T8 J:FG40T8

FIG.4
(F4041040)

Item No	Part No.	Mark	Description		Req'd	Remarks : Serial No.
A1	55781-10101		CLEANER-ASSY,AIR	ｸﾘｰﾅｱｯｾﾝ	1	INC.1-8
1	NO PART NO.	#	BODY	ﾎﾞﾃﾞｨ	1	
2	55781-12011		ELEMENT	ｴﾚﾒﾝﾄ	1	
3	20801-03391		ELEMENT	ｴﾚﾒﾝﾄ	1	
-	55781-12021		ELEMENT	ｴﾚﾒﾝﾄ	1	(NO CONTROL NO.)
4	53651-12511		NUT	ﾅｯﾄ	2	
5	55781-12031		SCARF	ｽｶｰﾌ	1	
6	NO PART NO.	#	CUP	ｶｯﾌﾟ	1	
7	24351-02241		CLAMP	ｸﾗﾝﾌﾟ	1	
8	522A1-10201		SENSOR	ｾﾝｻ	1	
9	25951-02031		BAND	ﾊﾞﾝﾄﾞ	2	
10	01100-08012		BOLT	ﾎﾞﾙﾄ	4	
11	01183-08025		BOLT & WASHER	ﾎﾞﾙﾄ&ﾜｯｼｬ	2	
12	01400-00008		NUT	ﾅｯﾄ	2	
13	02010-00008		WASHER	ﾜｯｼｬ	6	
14	235C1-00311		HOSE	ﾎｰｽ	1	A,B,C,D,E,F,G
-	235L1-02021		HOSE	ﾎｰｽ	1	H,J,K,L
15	04911-00095		CLIP	ｸﾘｯﾌﾟ	1	A,B,C,D,E,F,G
-	04911-00090		CLIP	ｸﾘｯﾌﾟ	1	H,J,K,L
16	04911-00105		CLIP	ｸﾘｯﾌﾟ	1	A,B,C,D,E,F:1-188 G:1-106 H,J,K,L:1-102
-	04911-00110		CLIP	ｸﾘｯﾌﾟ	1	A,B,C,D,E,F:189- G:107- H,J,K,L:103-
17	235C1-00351		PIPE	ﾊﾟｲﾌﾟ	1	
18	04911-00080		CLIP	ｸﾘｯﾌﾟ	1	
19	04911-00100		CLIP	ｸﾘｯﾌﾟ	1	A,B,C,D,E,F:111- G:102- H,J,K,L:103-
20	235C1-02031		SUPPORT	ｻﾎﾟｰﾄ	1	A,B,C,D,E,F:111- G:102- H,J,K,L:103-
21	01183-08016		BOLT & WASHER	ﾎﾞﾙﾄ&ﾜｯｼｬ	1	A,B,C,D,E,F:111- G:102- H,J,K,L:103-

FIG.5 AIR CLEANER [AC]

(F4041050) エアークリーナ

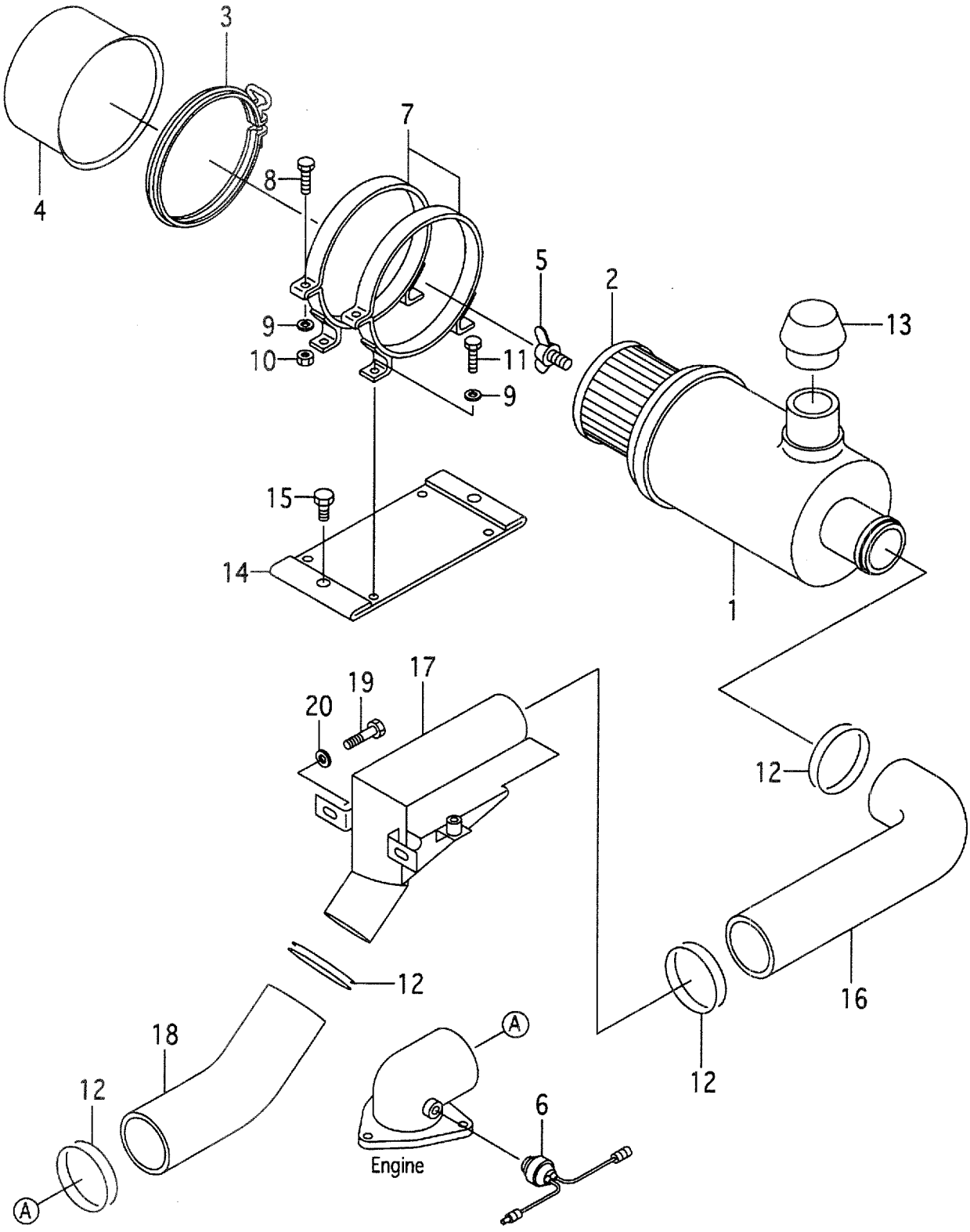

A:FD35C8 D:FD40T8 G:FD50T8 K:FG45T8
B:FD35T8 E:FD45C8 H:FG35T8 L:FG50T8
C:FD40C8 F:FD45T8 J:FG40T8

FIG.5
(F4041050)

Item No	Part No.	Mark	Description		Req'd	Remarks : Serial No.
A1	24351-00111		CLEANER-ASSY,AIR,CYC	ｸﾘｰﾅｱｯｾﾝ	1	A,B,C,D,E,F,G [AC] INC.1-5
1	NO PART NO.	#	BODY	ﾎﾞﾃﾞｨ	1	A,B,C,D,E,F,G [AC]
2	20801-03091		ELEMENT	ｴﾚﾒﾝﾄ	1	A,B,C,D,E,F,G [AC]
-	53911-12011		ELEMENT,AIR	ｴﾚﾒﾝﾄ	1	A,B,C,D,E,F,G [AC](NO CONTROL NO.)
3	24351-02241		CLAMP	ｸﾗﾝﾌﾟ	1	A,B,C,D,E,F,G [AC]
4	24351-02231		CUP	ｶｯﾌﾟ	1	A,B,C,D,E,F,G [AC]
5	24351-02221		BOLT & GASKET	ﾎﾞﾙﾄ&ｶﾞｽｹｯﾄ	1	A,B,C,D,E,F,G [AC]
6	522A1-10201		SENSOR	ｾﾝｻ	1	A,B,C,D,E,F,G [AC]
7	25951-02031		BAND	ﾊﾞﾝﾄﾞ	2	A,B,C,D,E,F,G [AC]
8	01181-08025		BOLT	ﾎﾞﾙﾄ	2	A,B,C,D,E,F,G [AC]
9	02010-00008		WASHER	ﾜｯｼｬ	6	A,B,C,D,E,F,G [AC]
10	01400-00008		NUT	ﾅｯﾄ	2	A,B,C,D,E,F,G [AC]
11	01100-08012		BOLT	ﾎﾞﾙﾄ	4	A,B,C,D,E,F,G [AC]
12	04911-00095		CLAMP	ｸﾗﾝﾌﾟ	4	A,B,C,D,E,F,G [AC]
13	25781-02101		CAP,INLET	ｷｬｯﾌﾟ	1	A,B,C,D,E,F,G [AC]
14	524W7-62141		PLATE	ﾌﾟﾚｰﾄ	1	A,B,C,D,E,F,G [AC]
15	01186-10025		BOLT	ﾎﾞﾙﾄ	2	A,B,C,D,E,F,G [AC]
16	535C7-62081		HOSE,A/C-E/G	ﾎｰｽ	1	A,B,C,D,E,F [AC]
-	535H7-62081		HOSE,A/C-E/G	ﾎｰｽ	1	G [AC]
17	535C7-62091		PIPE,JOINT	ﾊﾟｲﾌﾟ	1	A,B,C,D,E,F,G [AC]
18	535C7-62021		HOSE	ﾎｰｽ	1	A,B,C,D,E,F,G [AC]
19	01185-08020		BOLT	ﾎﾞﾙﾄ	2	A,B,C,D,E,F,G [AC]
20	02000-00008		WASHER	ﾜｯｼｬ	2	A,B,C,D,E,F,G [AC]

FIG.6 AIR CLEANER [EXA]

(F4041060) エアークリーナ

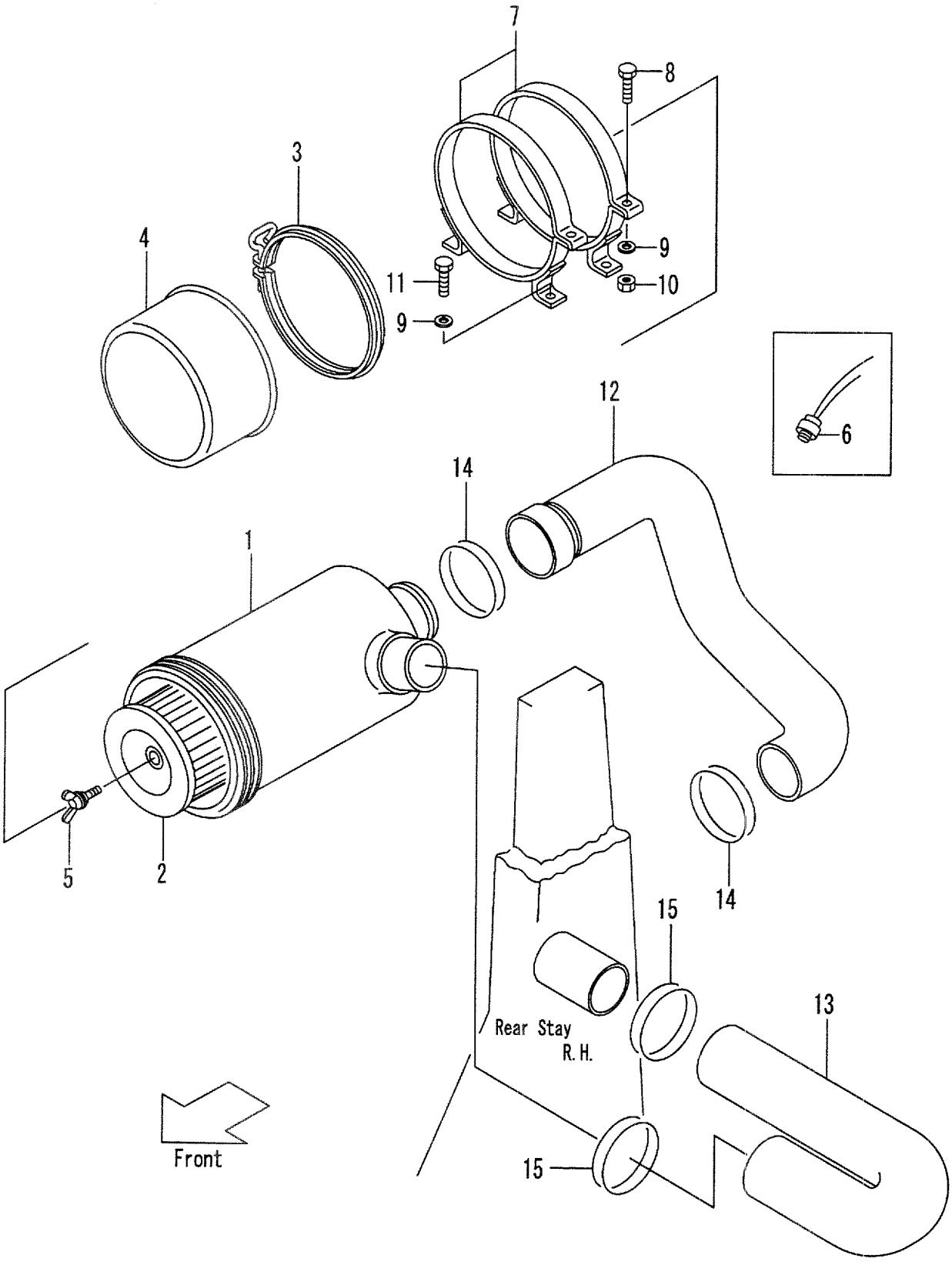

A:FD35C8 D:FD40T8 G:FD50T8 K:FG45T8
B:FD35T8 E:FD45C8 H:FG35T8 L:FG50T8
C:FD40C8 F:FD45T8 J:FG40T8

FIG.6
(F4041060)

Item No	Part No.	Mark	Description		Req'd	Remarks : Serial No.
A1	54352-72051		CLEANER-ASSY,AIR,CYC	ｸﾘｰﾅｱｯｾﾝ	1	H,J,K,L [EXA] INC.1-5
1	NO PART NO.	#	BODY	ﾎﾞﾃﾞｨ	1	H,J,K,L [EXA]
2	54352-72061		ELEMENT	ｴﾚﾒﾝﾄ	1	H,J,K,L [EXA]
3	24351-02241		CLAMP	ｸﾗﾝﾌﾟ	1	H,J,K,L [EXA]
4	24351-02231		CUP	ｶｯﾌﾟ	1	H,J,K,L [EXA]
5	24351-02221		BOLT & GASKET	ﾎﾞﾙﾄ&ｶﾞｽｹｯﾄ	1	H,J,K,L [EXA]
6	522A1-10201		SENSOR	ｾﾝｻ	1	H,J,K,L [EXA]
7	25951-02031		BAND	ﾊﾞﾝﾄﾞ	2	H,J,K,L [EXA]
8	01181-08025		BOLT	ﾎﾞﾙﾄ	2	H,J,K,L [EXA]
9	02010-00008		WASHER	ﾜｯｼｬ	6	H,J,K,L [EXA]
10	01400-00008		NUT	ﾅｯﾄ	2	H,J,K,L [EXA]
11	01100-08012		BOLT	ﾎﾞﾙﾄ	4	H,J,K,L [EXA]
12	535L2-72021		HOSE,A/C-E/G	ﾎｰｽ	1	H,J,K,L [EXA]
13	535L2-72031		HOSE,A/C-H/G	ﾎｰｽ	1	H,J,K,L [EXA]
14	04911-00090		CLAMP	ｸﾗﾝﾌﾟ	2	H,J,K:1-308 L:1-132 [EXA]
-	04911-00095		CLIP	ｸﾘｯﾌﾟ	2	H,J,K:309- L:133- [EXA]
15	04911-00095		CLAMP	ｸﾗﾝﾌﾟ	2	H,J,K,L [EXA]

FIG.7 COOLING UNIT

(F4042110) クーリング゛ユニット

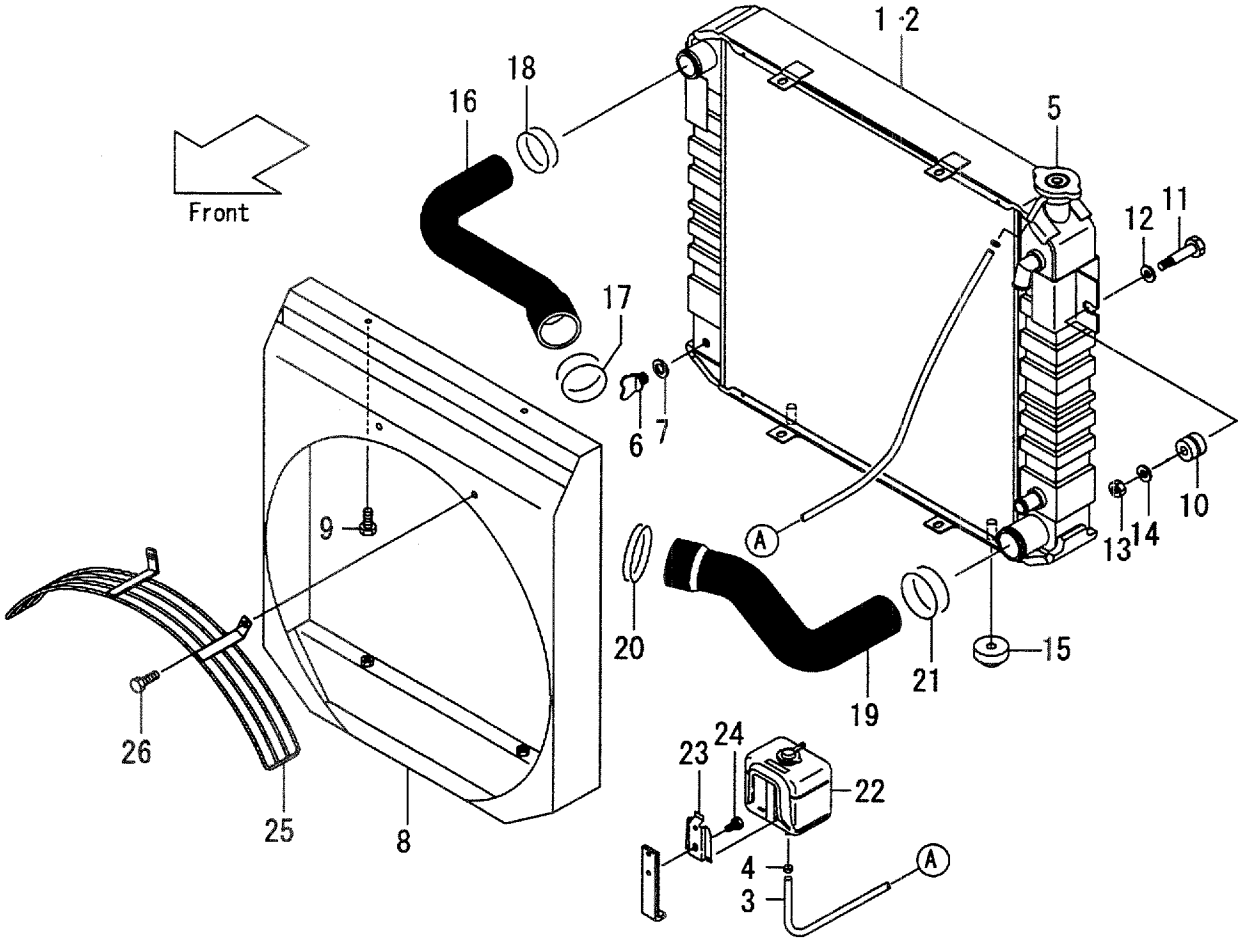

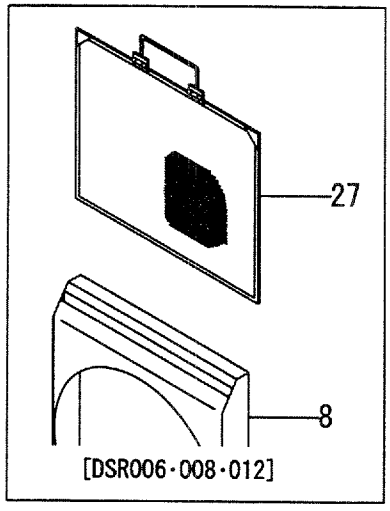

A:FD35C8 D:FD40T8 G:FD50T8 K:FG45T8
B:FD35T8 E:FD45C8 H:FG35T8 L:FG50T8
C:FD40C8 F:FD45T8 J:FG40T8

FIG.7
(F4042110)

Item No	Part No.	Mark	Description		Req'd	Remarks : Serial No.
1	235E2-10201		RADIATOR	ﾗｼﾞｴｰﾀ	1	A,B,C,D,E,F:1-1007 G:1-242 INC.2-7
-	235E2-10202		RADIATOR	ﾗｼﾞｴｰﾀ	1	A,B,C,D,E,F:1008- G:243- INC.2-7
-	235E2-10401		RADIATOR	ﾗｼﾞｴｰﾀ	1	A,B,C,D,E,F:1-1007 G:1-242 [EXA][RADPF] INC.2-7
-	235E2-10402		RADIATOR	ﾗｼﾞｴｰﾀ	1	A,B,C,D,E,F:1008- G:243- [EXA][RADPF] INC.2-7
-	235E2-10501		RADIATOR	ﾗｼﾞｴｰﾀ	1	A,B,C,D,E,F:1-1007 G:1-242 [RADPF2] INC.2-7
-	235E2-10502		RADIATOR	ﾗｼﾞｴｰﾀ	1	A,B,C,D,E,F:1008- G:243- [RADPF2] INC.2-7
2	NO PART NO.	#	BODY	ﾎﾞﾃﾞｨ	1	A,B,C,D,E,F,G
3	NO PART NO.		HOSE	ﾎｰｽ	1	A,B,C,D,E,F:1-1007 G:1-242
-	224W2-12541		HOSE	ﾎｰｽ	1	A,B,C,D,E,F:1008- G:243-
-	224W2-12541		HOSE	ﾎｰｽ	1	A,B,C,D,E,F,G [EXA][RADPF]
4	23772-12071		CLIP	ｸﾘｯﾌﾟ	2	A,B,C,D,E,F,G
5	25592-13021		CAP	ｷｬｯﾌﾟ	1	A,B,C,D,E,F,G
6	22192-12111		COCK	ｺｯｸ	1	A,B,C,D,E,F,G
7	22192-12121		PACKING	ﾊﾟｯｷﾝｸﾞ	1	A,B,C,D,E,F,G
8	235C2-12031		SHROUD	ｼｭﾗｳﾄﾞ	1	A,B,C,D,E,F:1-340 G:1-143
-	535C3-82031		SHROUD	ｼｭﾗｳﾄﾞ	1	A,B,C,D,E,F:341- G:144-
-	535C3-82031		SHROUD	ｼｭﾗｳﾄﾞ	1	A,B,C,D,E,F,G [EXE][EXN]
-	535C6-52001		SHROUD	ｼｭﾗｳﾄﾞ	1	A,B,C,D,E,F:1-542 G:1-179 [DSR]
-	535C6-52002		SHROUD	ｼｭﾗｳﾄﾞ	1	A,B,C,D,E,F:543- G:180- [DSR]
-	535C7-62551		SHROUD	ｼｭﾗｳﾄﾞ	1	A,B,C,D,E,F:720- G:228- [SCBAC]
9	01185-08020		BOLT	ﾎﾞﾙﾄ	4	A,B,C,D,E,F,G
10	214A2-12001		RUBBER	ﾗﾊﾞｰ	2	A,B,C,D,E,F,G
11	214A2-12021		BOLT	ﾎﾞﾙﾄ	2	A,B,C,D,E,F,G
12	22252-32251		WASHER	ﾜｯｼｬ	2	A,B,C,D,E,F,G
13	23652-12051		NUT	ﾅｯﾄ	2	A,B,C,D,E,F,G
14	02000-00008		WASHER	ﾜｯｼｬ	2	A,B,C,D,E,F,G

FIG.7 COOLING UNIT

(F4042110) クーリング゛ユニット

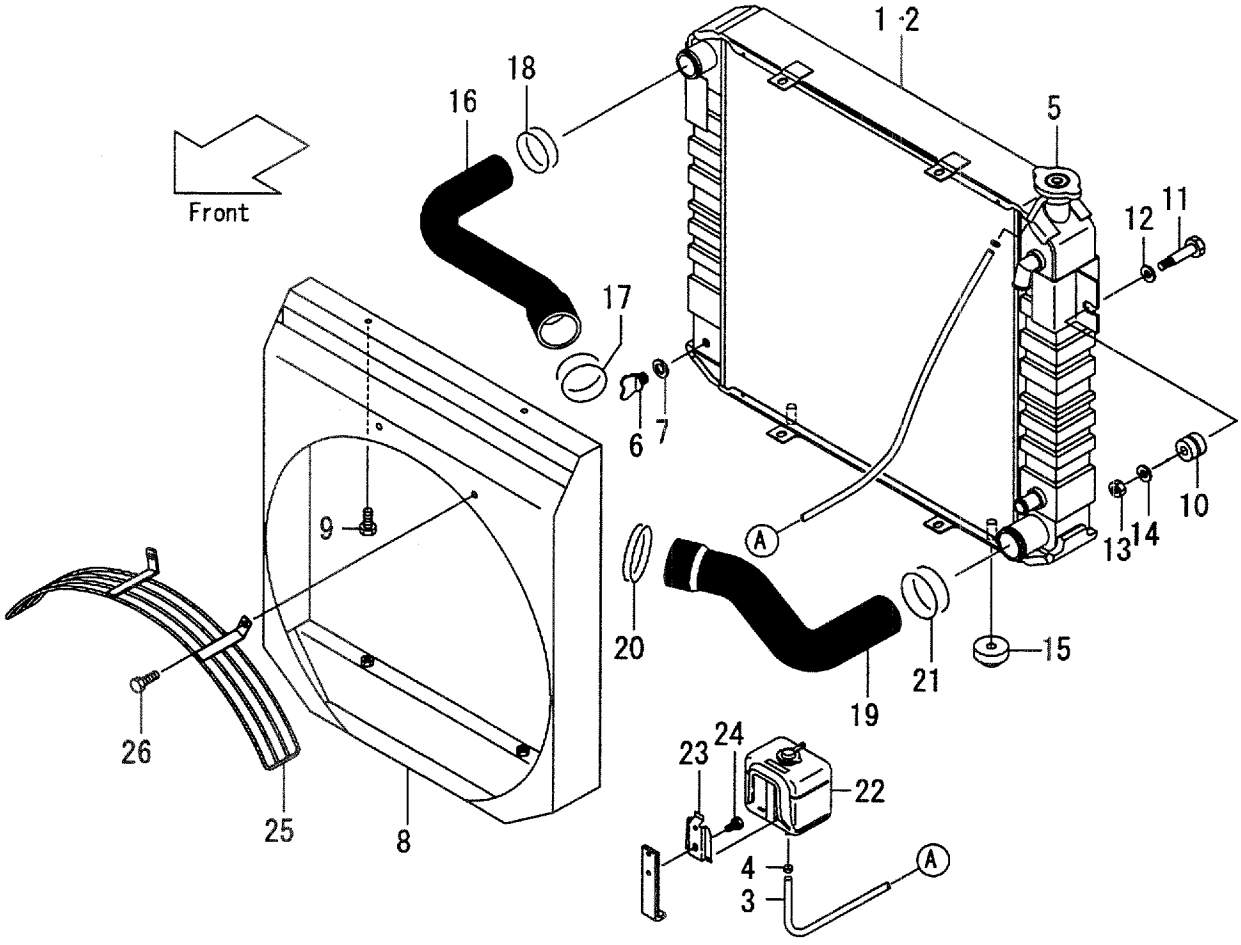

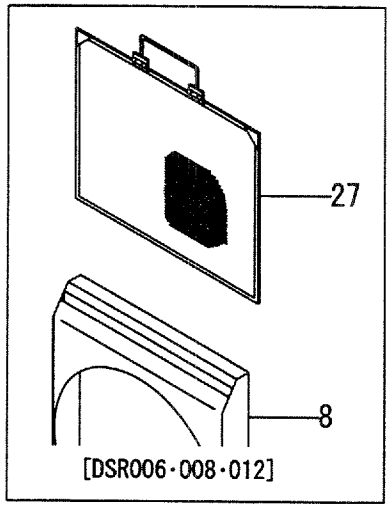

A:FD35C8 D:FD40T8 G:FD50T8 K:FG45T8
B:FD35T8 E:FD45C8 H:FG35T8 L:FG50T8
C:FD40C8 F:FD45T8 J:FG40T8

FIG.7
(F4042110)

Item No	Part No.	Mark	Description		Req'd	Remarks : Serial No.
15	214A2-12011		RUBBER	ﾗﾊﾞｰ	2	A,B,C,D,E,F,G
16	235C2-12011		HOSE,UPPER	ﾎｰｽ	1	A,B,C,D,E,F,G
17	04911-00060		CLIP	ｸﾘｯﾌﾟ	1	A,B,C,D,E,F:1-1191 G:1-260
-	22678-42611		CLIP	ｸﾘｯﾌﾟ	1	A,B,C,D,E,F:1192- G:261-
18	04911-00050		CLIP	ｸﾘｯﾌﾟ	1	A,B,C,D,E,F,G
19	235C2-12021		HOSE,LOWER	ﾎｰｽ	1	A,B,C,D,E,F,G
20	04911-00065		CLIP	ｸﾘｯﾌﾟ	1	A,B,C,D,E,F:1-1191 G:1-260
-	22678-42611		BAND	ﾊﾞﾝﾄﾞ	1	A,B,C,D,E,F:1192- G:261-
21	04911-00055		CLIP	ｸﾘｯﾌﾟ	1	A,B,C,D,E,F,G
22	214A2-12111		TANK,RESERVE	ﾀﾝｸ	1	A,B,C,D,E,F,G
-	214A2-12121		TANK,RESERVE	ﾀﾝｸ	1	A,B,C,D,E,F,G [OKM]
23	214A2-12141		BRACKET	ﾌﾞﾗｹｯﾄ	1	A,B,C,D,E,F,G
24	01183-06012		BOLT	ﾎﾞﾙﾄ	2	A,B,C,D,E,F,G
25	535C3-83011		GUARD,FAN	ｶﾞｰﾄﾞ	1	A,B,C,D,E,F,G [EXD][EXE][EXN]
26	01183-08020		BOLT	ﾎﾞﾙﾄ	2	A,B,C,D,E,F,G [EXD][EXE][EXN]
27	535C6-50101		SCREEN,DUST	ｽｸﾘｰﾝ	1	A,B,C,D,E,F,G [DSR006]
-	535C6-50111		SCREEN,DUST	ｽｸﾘｰﾝ	1	A,B,C,D,E,F,G [DSR008]
-	535C6-50121		SCREEN,DUST	ｽｸﾘｰﾝ	1	A,B,C,D,E,F,G [DSR012]
28	530C6-52181	+	BRACKET	ﾌﾞﾗｹｯﾄ	1	A,B,C,D,E,F,G [DSR]
29	530C6-52191	+	BRACKET	ﾌﾞﾗｹｯﾄ	1	A,B,C,D,E,F,G [DSR]

FIG.8 COOLING UNIT

(F4042120) クーリング゛ユニット

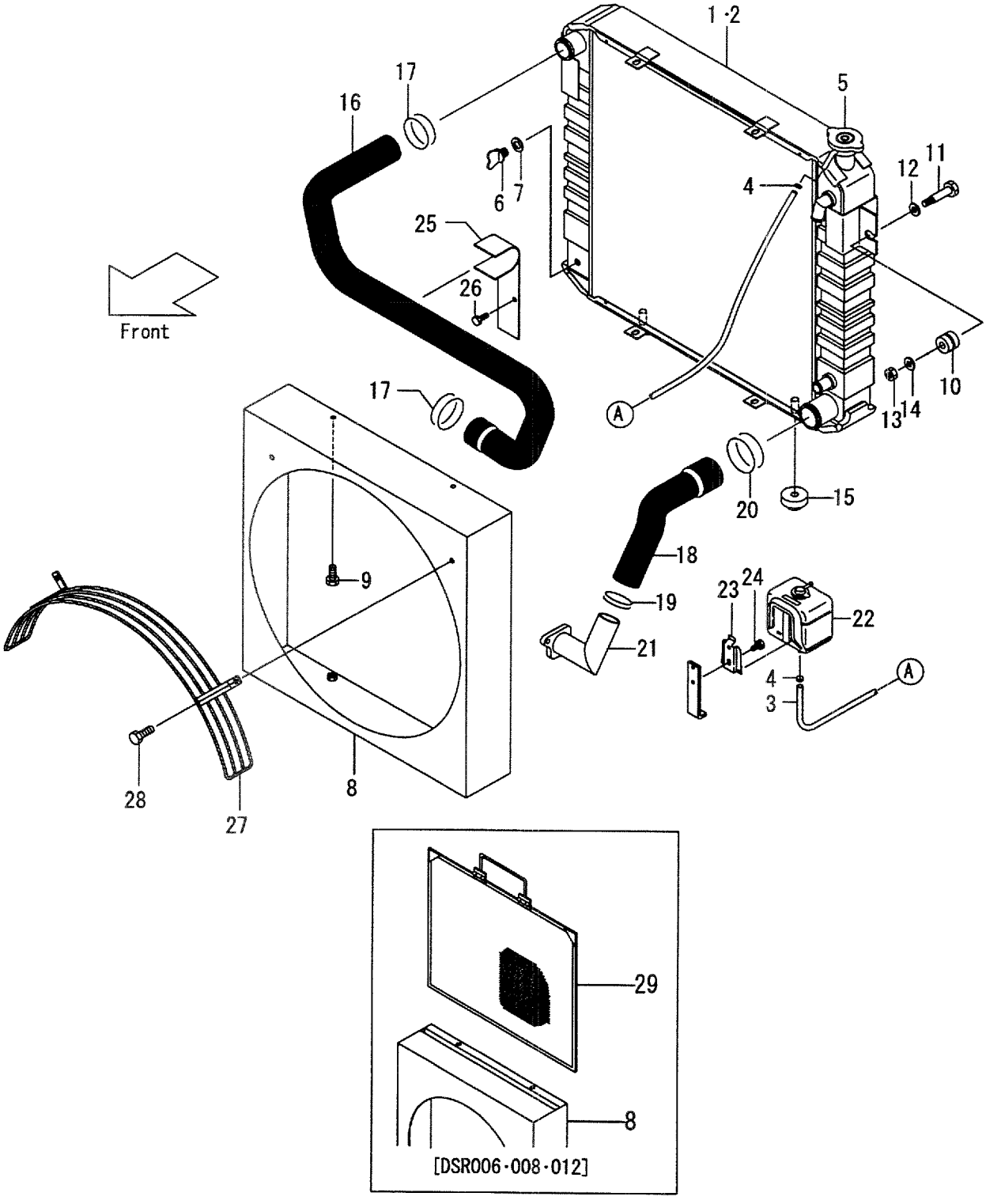

A:FD35C8 D:FD40T8 G:FD50T8 K:FG45T8
B:FD35T8 E:FD45C8 H:FG35T8 L:FG50T8
C:FD40C8 F:FD45T8 J:FG40T8

FIG.8
(F4042120)

Item No	Part No.	Mark	Description		Req'd	Remarks : Serial No.
1	235E2-10201		RADIATOR	ﾗｼﾞｴｰﾀ	1	H,J,K:1-214 L:1-108 INC.2-7
-	235E2-10202		RADIATOR	ﾗｼﾞｴｰﾀ	1	H,J,K:215- L:109- INC.2-7
-	235E2-10401		RADIATOR	ﾗｼﾞｴｰﾀ	1	H,J,K:1-214 L:1-108 [RADPF] INC.2-7
-	235E2-10402		RADIATOR	ﾗｼﾞｴｰﾀ	1	H,J,K:215- L:109- [RADPF] INC.2-7
-	235E2-10501		RADIATOR	ﾗｼﾞｴｰﾀ	1	H,J,K:1-214 L:1-108 [RADPF2] INC.2-7
-	235E2-10502		RADIATOR	ﾗｼﾞｴｰﾀ	1	H,J,K:215- L:109- [RADPF2] INC.2-7
2	NO PART NO.	#	BODY	ﾎﾞﾃﾞｨ	1	H,J,K,L
3	NO PART NO.		HOSE	ﾎｰｽ	1	H,J,K:1-214 L:1-108
-	224W2-12541		HOSE	ﾎｰｽ	1	H,J,K:215- L:109-
4	23772-12071		CLIP	ｸﾘｯﾌﾟ	2	H,J,K,L
5	25592-13021		CAP	ｷｬｯﾌﾟ	1	H,J,K,L
6	22192-12111		COCK	ｺｯｸ	1	H,J,K,L
7	22192-12121		PACKING	ﾊﾟｯｷﾝｸﾞ	1	H,J,K,L
8	235L2-12031		SHROUD	ｼｭﾗｳﾄﾞ	1	H,J,K:1-133 L:1-102
-	535L3-82031		SHROUD	ｼｭﾗｳﾄﾞ	1	H,J,K:134- L:103-
-	535L3-82031		SHROUD	ｼｭﾗｳﾄﾞ	1	H,J,K,L [EXE][EXN]
-	535L6-52001		SHROUD	ｼｭﾗｳﾄﾞ	1	H,J,K:1-161 L:1-105 [DSR]
-	535L6-52002		SHROUD	ｼｭﾗｳﾄﾞ	1	H,J,K:162- L:106- [DSR]
9	01185-08020		BOLT	ﾎﾞﾙﾄ	4	H,J,K,L
10	214A2-12001		RUBBER	ﾗﾊﾞｰ	2	H,J,K,L
11	214A2-12021		BOLT	ﾎﾞﾙﾄ	2	H,J,K,L
12	22252-32251		WASHER	ﾜｯｼｬ	2	H,J,K,L
13	23652-12051		NUT	ﾅｯﾄ	2	H,J,K,L
14	02000-00008		WASHER	ﾜｯｼｬ	2	H,J,K,L
15	214A2-12011		RUBBER	ﾗﾊﾞｰ	2	H,J,K,L
16	235L2-12001		HOSE,UPPER	ﾎｰｽ	1	H,J,K,L
17	04911-00050		CLIP	ｸﾘｯﾌﾟ	2	H,J,K,L
18	235L2-12011		HOSE,LOWER	ﾎｰｽ	1	H,J,K,L
19	04911-00050		CLIP	ｸﾘｯﾌﾟ	1	H,J,K,L

FIG.8 COOLING UNIT

(F4042120) クーリング゛ユニット

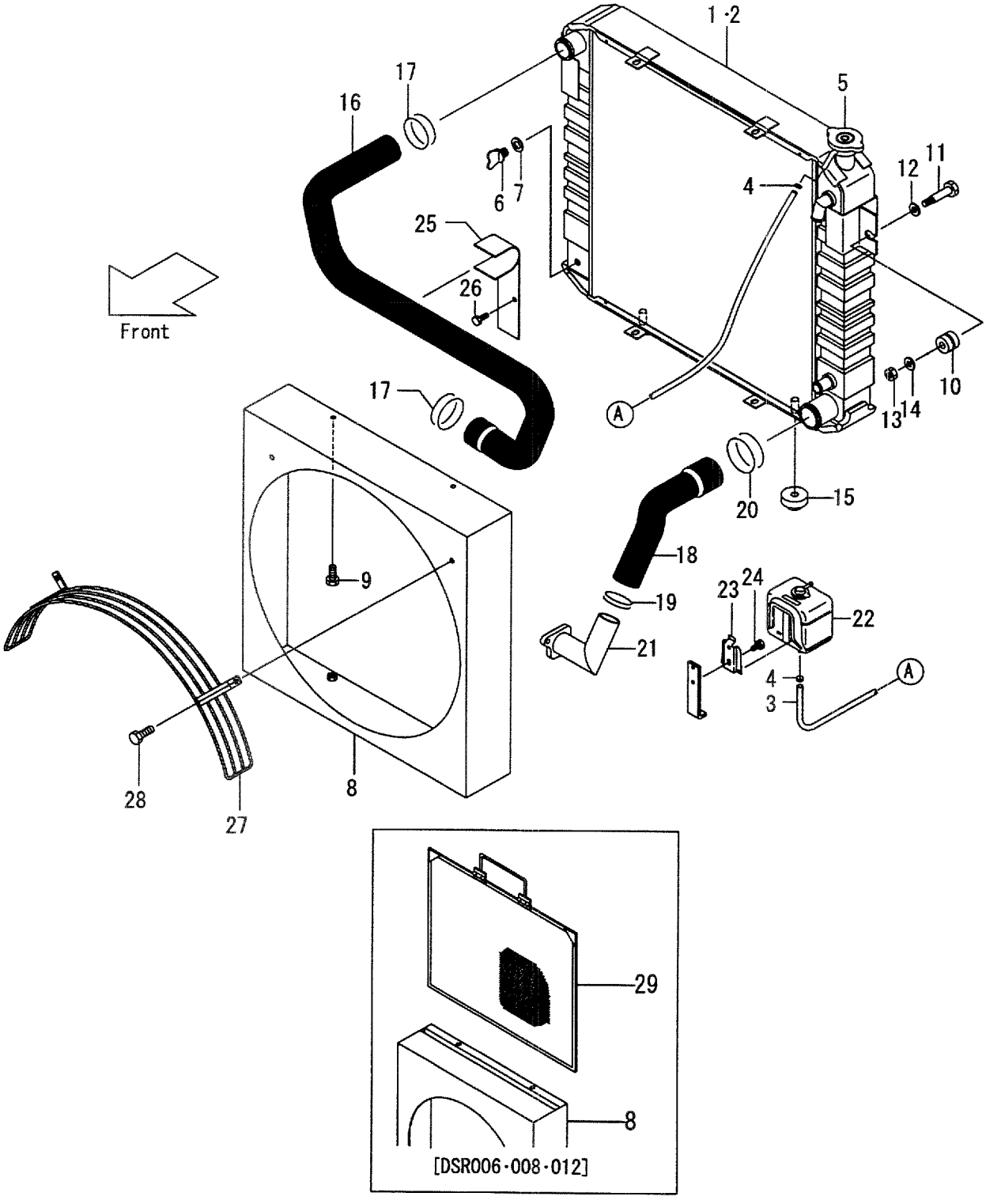

A:FD35C8 D:FD40T8 G:FD50T8 K:FG45T8
B:FD35T8 E:FD45C8 H:FG35T8 L:FG50T8
C:FD40C8 F:FD45T8 J:FG40T8

FIG.8
(F4042120)

Item No	Part No.	Mark	Description		Req'd	Remarks : Serial No.
20	04911-00055		CLIP	ｸﾘｯﾌﾟ	1	H,J,K,L
21	235L2-12021		FITTING,HOSE	ﾌｨｯﾃｨﾝｸﾞ	1	H,J,K,L
22	214A2-12111		TANK,RESERVE	ﾀﾝｸ	1	H,J,K,L
-	214A2-12121		TANK,RESERVE	ﾀﾝｸ	1	H,J,K,L
						[OKM]
23	214A2-12141		BRACKET	ﾌﾞﾗｹｯﾄ	1	H,J,K,L
24	01183-06012		BOLT	ﾎﾞﾙﾄ	2	H,J,K,L
25	235L2-12071		CLAMP	ｸﾗﾝﾌﾟ	1	H,J,K,L:103-
-	535L2-72051		CLAMP	ｸﾗﾝﾌﾟ	1	H,J,K,L
						[EXA]
26	01183-06016		BOLT	ﾎﾞﾙﾄ	1	H,J,K,L:103-
-	01183-08016		BOLT & WASHER	ﾎﾞﾙﾄ&ﾜｯｼｬ	1	H,J,K,L
						[EXA]
27	535L3-83011		GUARD,FAN	ｶﾞｰﾄﾞ	1	H,J,K,L
						[EXD][EXE][EXN]
28	01183-08020		BOLT	ﾎﾞﾙﾄ	2	H,J,K,L
						[EXE][EXN]
29	535C6-50101		SCREEN,DUST	ｽｸﾘｰﾝ	1	H,J,K,L
						[DSR006]
-	535C6-50111		SCREEN,DUST	ｽｸﾘｰﾝ	1	H,J,K,L
						[DSR008]
-	535C6-50121		SCREEN,DUST	ｽｸﾘｰﾝ	1	H,J,K,L
						[DSR012]
30	530C6-52181	+	BRACKET	ﾌﾞﾗｹｯﾄ	1	H,J,K,L
						[DSR]
31	530C6-52191	+	BRACKET	ﾌﾞﾗｹｯﾄ	1	H,J,K,L
						[DSR]

FIG.9 FUEL SYSTEM

(F4042210) フューエルシステム

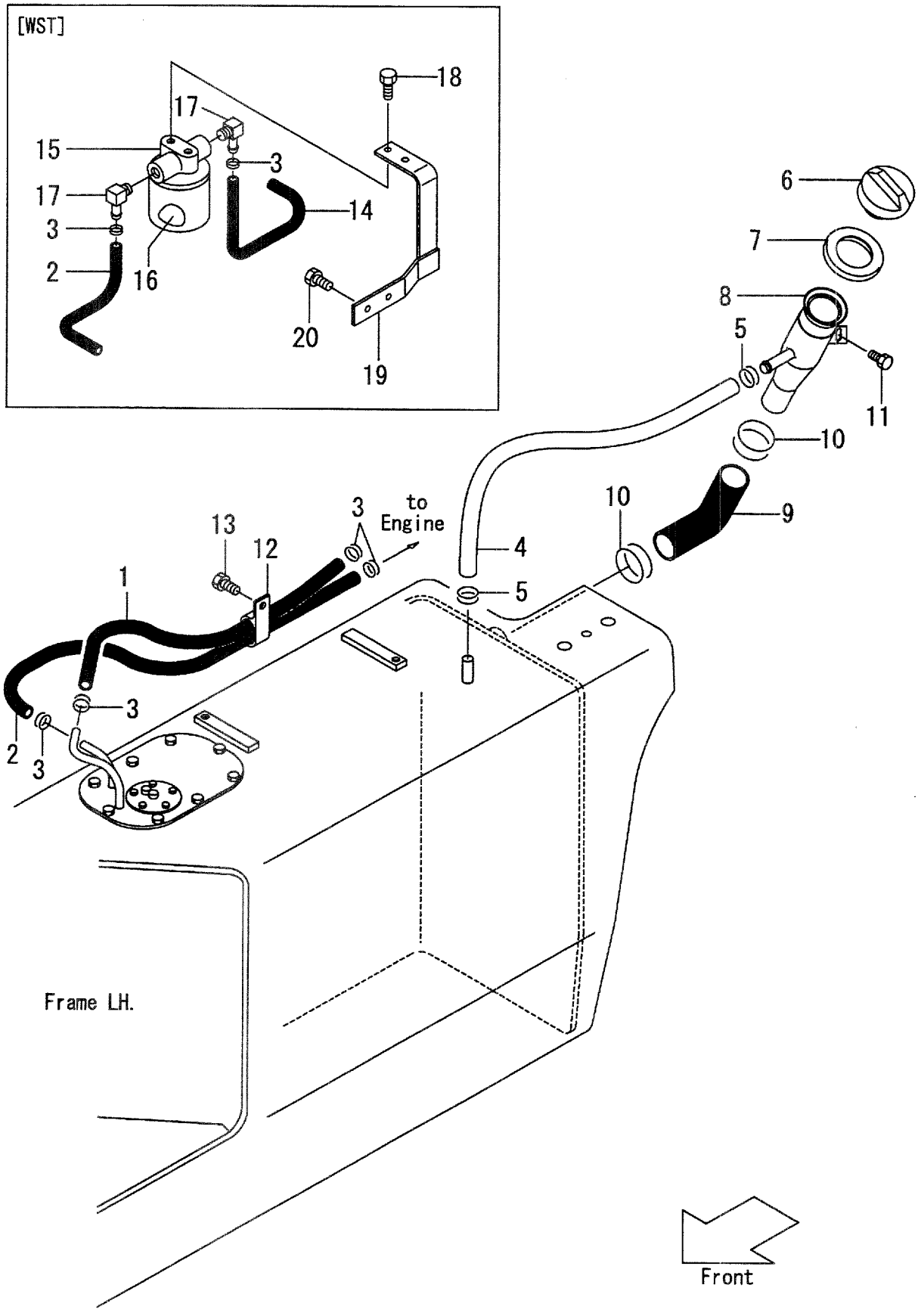

A:FD35C8 D:FD40T8 G:FD50T8 K:FG45T8
B:FD35T8 E:FD45C8 H:FG35T8 L:FG50T8
C:FD40C8 F:FD45T8 J:FG40T8

FIG.9
(F4042210)

Item No	Part No.	Mark	Description		Req'd	Remarks : Serial No.
1	224W2-22071		HOSE	ﾎｰｽ	1	A,B,C,D,E,F,G
2	224W2-22071		HOSE	ﾎｰｽ	1	A,B,C,D,E,F,G
-	23912-22031		HOSE	ﾎｰｽ	1	A,B,C,D,E,F,G [WST]
3	23652-23051		CLIP	ｸﾘｯﾌﾟ	4	A,B,C,D,E,F,G
-	23652-23051		CLIP	ｸﾘｯﾌﾟ	6	A,B,C,D,E,F,G [WST]
4	25592-22051		TUBE,VINYL	ﾁｭｰﾌﾞ	1	A,B,C,D,E,F,G
5	23652-23051		CLIP	ｸﾘｯﾌﾟ	2	A,B,C,D,E,F,G
6	216G2-22051		CAP	ｷｬｯﾌﾟ	1	A,B,C,D,E,F,G
7	216G2-22211		GROMMET	ｸﾞﾛﾒｯﾄ	1	A,B,C,D,E,F,G
8	235C2-22101		PIPE	ﾊﾟｲﾌﾟ	1	A,B,C,D,E,F,G
9	235C2-22011		HOSE	ﾎｰｽ	1	A,B,C,D,E,F,G
10	04911-00044		CLIP	ｸﾘｯﾌﾟ	2	A,B,C,D,E,F:1-107 G:1-101
-	04911-00048		CLIP	ｸﾘｯﾌﾟ	2	A,B,C,D,E,F:108- G:102-
11	01185-08016		BOLT	ﾎﾞﾙﾄ	1	A,B,C,D,E,F,G
12	25957-62201		CLIP	ｸﾘｯﾌﾟ	1	A,B,C,D,E,F:111- G:102-
13	01185-08016		BOLT & WASHER	ﾎﾞﾙﾄ&ﾜｯｼｬ	1	A,B,C,D,E,F:111- G:102-
14	25412-22001		HOSE	ﾎｰｽ	1	A,B,C,D,E,F,G [WST]
A1	53653-20201		FILTER-ASSY	ﾌｨﾙﾀｱｯｾﾝ	1	A,B,C,D,E,F,G [WST] INC.15,16
15	53653-22061		COVER	ｶﾊﾞｰ	1	A,B,C,D,E,F,G [WST]
16	53653-22071		ELEMENT	ｴﾚﾒﾝﾄ	1	A,B,C,D,E,F,G [WST]
17	53653-22011		ELBOW	ｴﾙﾎﾞ	2	A,B,C,D,E,F,G [WST]
18	01183-08016		BOLT	ﾎﾞﾙﾄ	2	A,B,C,D,E,F,G [WST]
19	535C3-22101		BRACKET	ﾌﾞﾗｹｯﾄ	1	A,B,C,D,E,F,G [WST]
20	01183-08020		BOLT	ﾎﾞﾙﾄ	2	A,B,C,D,E,F,G [WST]

FIG.10 FUEL SYSTEM

(F4042220) フューエルシステム

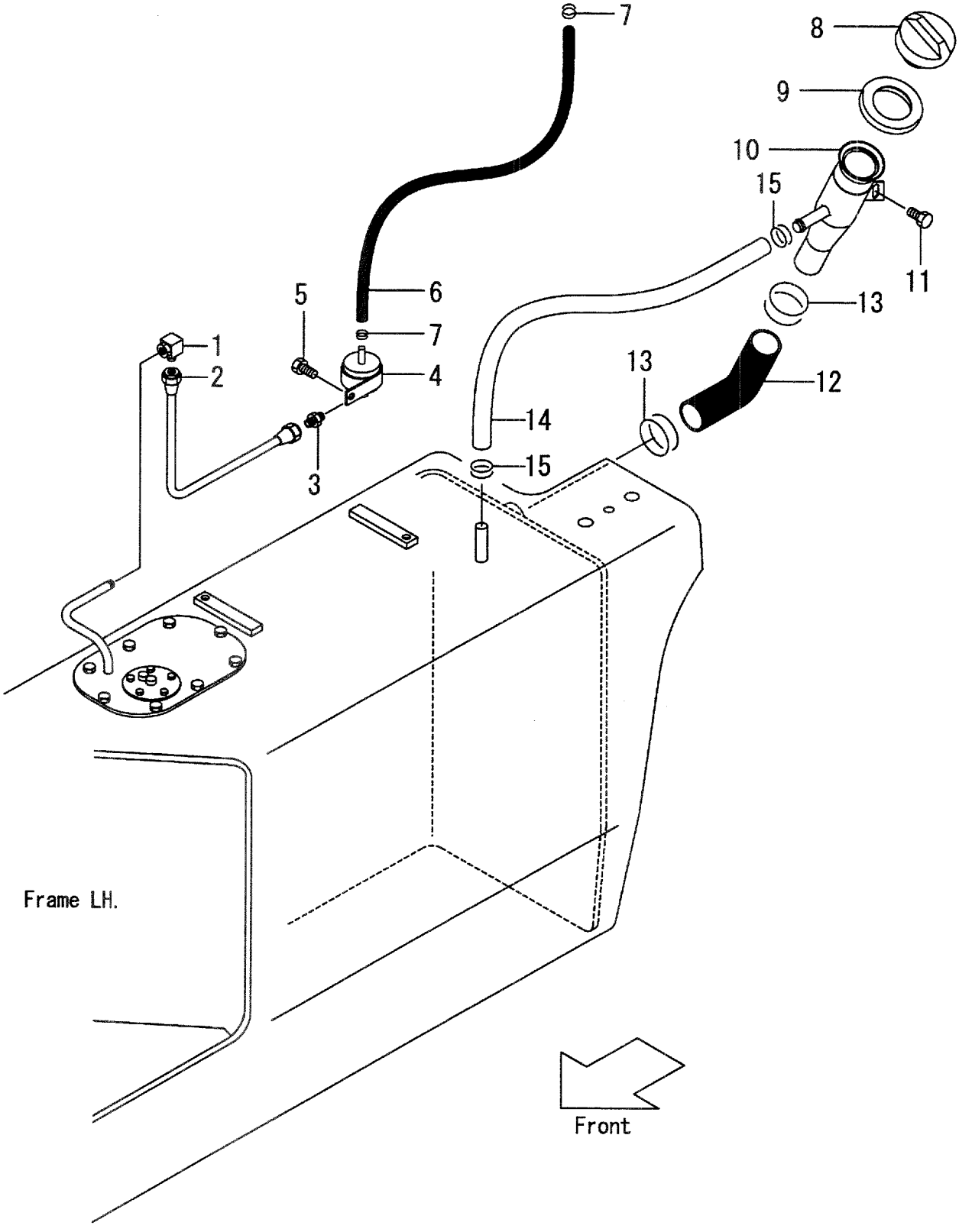

A:FD35C8 D:FD40T8 G:FD50T8 K:FG45T8
B:FD35T8 E:FD45C8 H:FG35T8 L:FG50T8
C:FD40C8 F:FD45T8 J:FG40T8

FIG.10
(F4042220)

Item No	Part No.	Mark	Description		Req'd	Remarks : Serial No.
1	55952-72051		ELBOW	ｴﾙﾎﾞ	1	H,J,K,L
2	223W2-22031		PIPE	ﾊﾟｲﾌﾟ	1	H,J,K,L
3	23442-20041		NIPPLE	ﾆｯﾌﾟﾙ	1	H,J,K,L
4	23862-22021		FILTER	ﾌｲﾙﾀ	1	H,J,K,L
5	01185-08016		BOLT	ﾎﾞﾙﾄ	1	H,J,K,L
6	23252-22001		HOSE	ﾎｰｽ	1	H,J,K,L
7	22192-22091		CLIP	ｸﾘｯﾌﾟ	2	H,J,K,L
8	216G2-22051		CAP	ｷｬｯﾌﾟ	1	H,J,K,L
9	216G2-22211		GROMMET	ｸﾞﾛﾒｯﾄ	1	H,J,K,L
10	235C2-22101		PIPE	ﾊﾟｲﾌﾟ	1	H,J,K,L
11	01185-08016		BOLT	ﾎﾞﾙﾄ	1	H,J,K,L
12	235C2-22011		HOSE	ﾎｰｽ	1	H,J,K,L
13	04911-00048		CLIP	ｸﾘｯﾌﾟ	2	H,J,K,L
14	25592-22051		TUBE,VINYL	ﾁｭｰﾌﾞ	1	H,J,K,L
15	23652-23051		CLIP	ｸﾘｯﾌﾟ	2	H,J,K,L

FIG.11 FUEL SYSTEM [EXA]

(F4042230) フューエルシステム

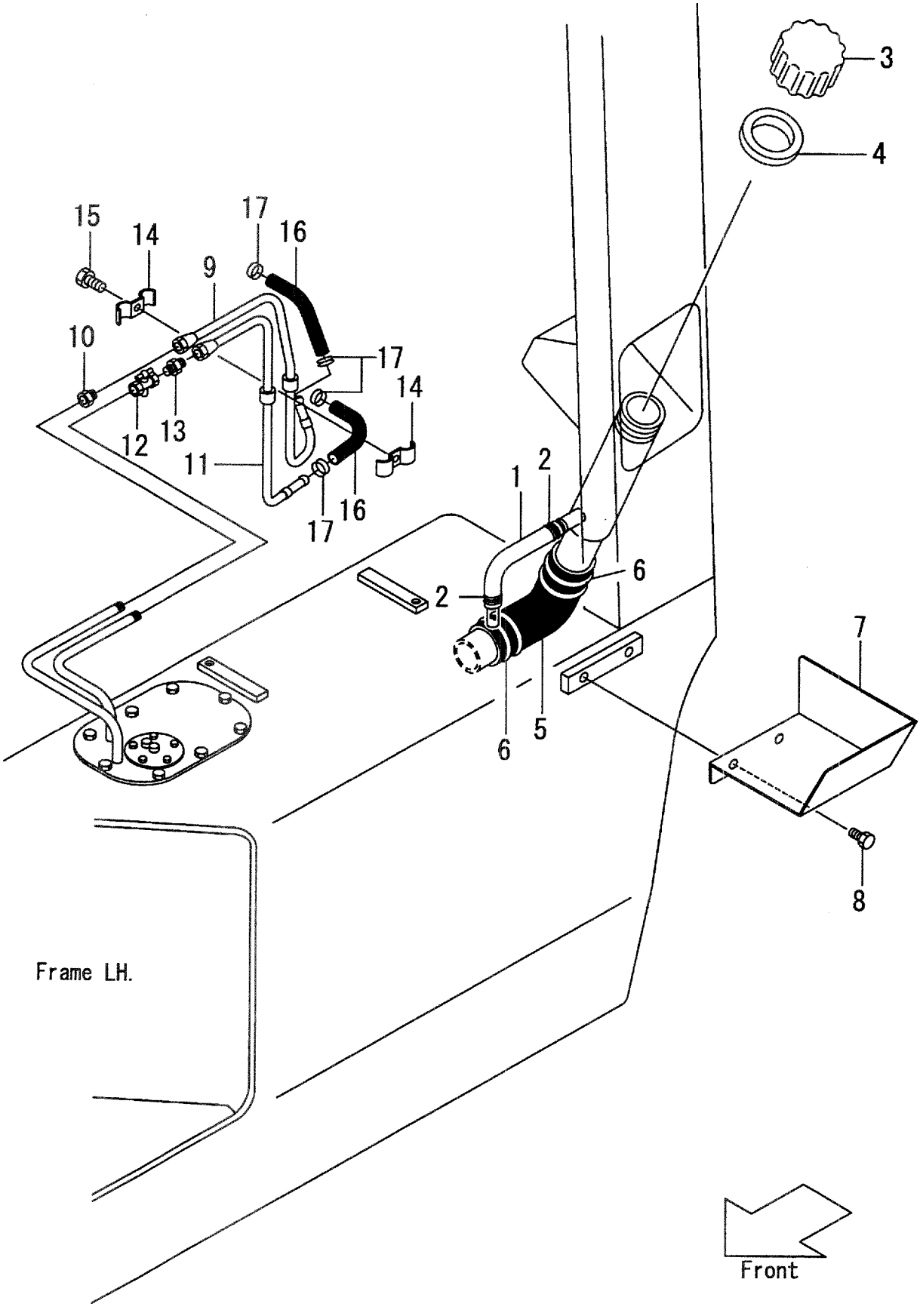

A:FD35C8 D:FD40T8 G:FD50T8 K:FG45T8
B:FD35T8 E:FD45C8 H:FG35T8 L:FG50T8
C:FD40C8 F:FD45T8 J:FG40T8

FIG.11
(F4042230)

Item No	Part No.	Mark	Description		Req'd	Remarks : Serial No.
1	25592-22051		TUBE,VINYL	ﾁｭｰﾌﾞ	1	B,D,F,G [EXA]
2	23652-23051		CLIP	ｸﾘｯﾌﾟ	2	B,D,F,G [EXA]
3	215E2-22021		CAP	ｷｬｯﾌﾟ	1	B,D,F,G [EXA] INC.4
4	215E2-22041		RUBBER	ﾗﾊﾞｰ	1	B,D,F,G [EXA]
5	235C2-22011		HOSE	ﾎｰｽ	1	B,D,F,G [EXA]
6	04911-00050		CLIP	ｸﾘｯﾌﾟ	2	B,D,F,G [EXA]
7	535E2-72071		COVER	ｶﾊﾞｰ	1	B,D,F,G [EXA]
8	01185-08012		BOLT	ﾎﾞﾙﾄ	2	B,D,F,G [EXA]
9	535E2-72051		PIPE	ﾊﾟｲﾌﾟ	1	B,D,F,G [EXA]
10	514A2-72251		NIPPLE	ﾆｯﾌﾟﾙ	1	B,D,F,G [EXA]
11	535E2-72031		PIPE	ﾊﾟｲﾌﾟ	1	B,D,F,G [EXA]
12	23442-20131		COCK	ｺｯｸ	1	B,D,F,G [EXA]
13	23442-20041		NIPPLE	ﾆｯﾌﾟﾙ	1	B,D,F,G [EXA]
14	20317-60331		BAND	ﾊﾞﾝﾄﾞ	2	B,D,F,G [EXA]
15	01183-08025		BOLT	ﾎﾞﾙﾄ	1	B,D,F,G [EXA]
16	22452-22001		HOSE	ﾎｰｽ	2	B,D,F,G [EXA]
17	23652-23051		CLIP	ｸﾘｯﾌﾟ	4	B,D,F,G [EXA]
18	535E2-72421	+	COVER	ｶﾊﾞｰ	1	B,D,F,G [EXA]

FIG.12 FUEL SYSTEM [EXA]

(F4042240) フューエルシステム

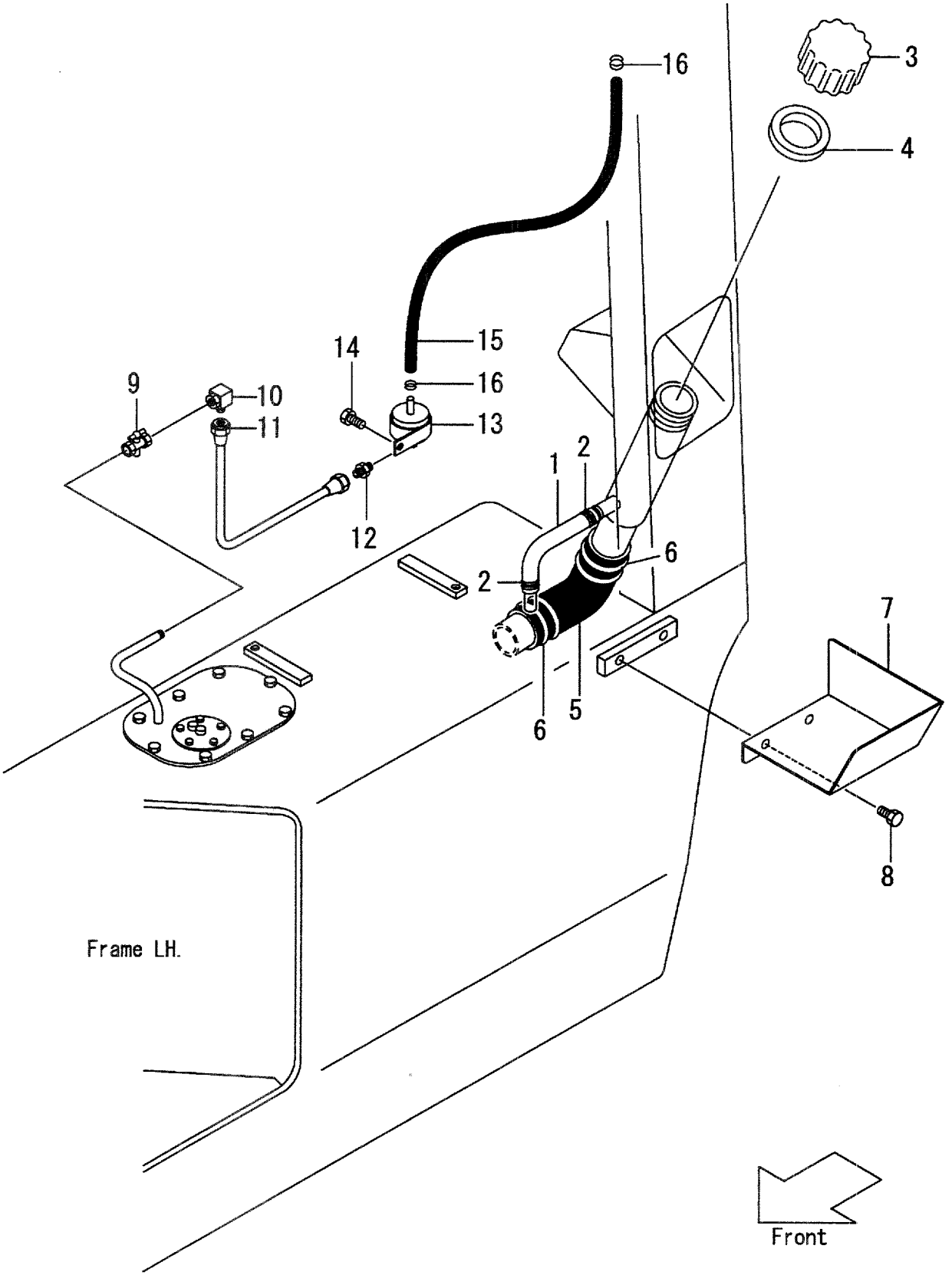

A:FD35C8 D:FD40T8 G:FD50T8 K:FG45T8
B:FD35T8 E:FD45C8 H:FG35T8 L:FG50T8
C:FD40C8 F:FD45T8 J:FG40T8

FIG.12
(F4042240)

Item No	Part No.	Mark	Description		Req'd	Remarks : Serial No.
1	25592-22051		TUBE,VINYL	ﾁｭｰﾌﾞ	1	H,J,K,L [EXA]
2	23652-23051		CLIP	ｸﾘｯﾌﾟ	2	H,J,K,L [EXA]
3	215E2-22021		CAP	ｷｬｯﾌﾟ	1	H,J,K,L [EXA] INC.4
4	215E2-22041		RUBBER	ﾗﾊﾞｰ	1	H,J,K,L [EXA]
5	235C2-22011		HOSE	ﾎｰｽ	1	H,J,K,L [EXA]
6	04911-00050		CLIP	ｸﾘｯﾌﾟ	2	H,J,K,L [EXA]
7	535E2-72071		COVER	ｶﾊﾞｰ	1	H,J,K,L [EXA]
8	01185-08012		BOLT	ﾎﾞﾙﾄ	2	H,J,K,L [EXA]
9	23442-20131		COCK	ｺｯｸ	1	H,J,K,L [EXA]
10	23442-20161		ELBOW	ｴﾙﾎﾞ	1	H,J,K,L [EXA]
11	523W2-70011		PIPE	ﾊﾟｲﾌﾟ	1	H,J,K,L [EXA]
12	23442-20041		NIPPLE	ﾆｯﾌﾟﾙ	1	H,J,K,L [EXA]
13	23862-22021		FILTER	ﾌｲﾙﾀ	1	H,J,K,L [EXA]
14	01185-08016		BOLT	ﾎﾞﾙﾄ	1	H,J,K,L [EXA]
15	23252-22001		HOSE	ﾎｰｽ	1	H,J,K,L [EXA]
16	22192-22091		CLIP	ｸﾘｯﾌﾟ	2	H,J,K,L [EXA]
17	535L2-72111	+	COVER	ｶﾊﾞｰ	1	H,J,K,L [EXA]

FIG.13 EXHAUST SYSTEM

(F4042310) エキゾーストシステム

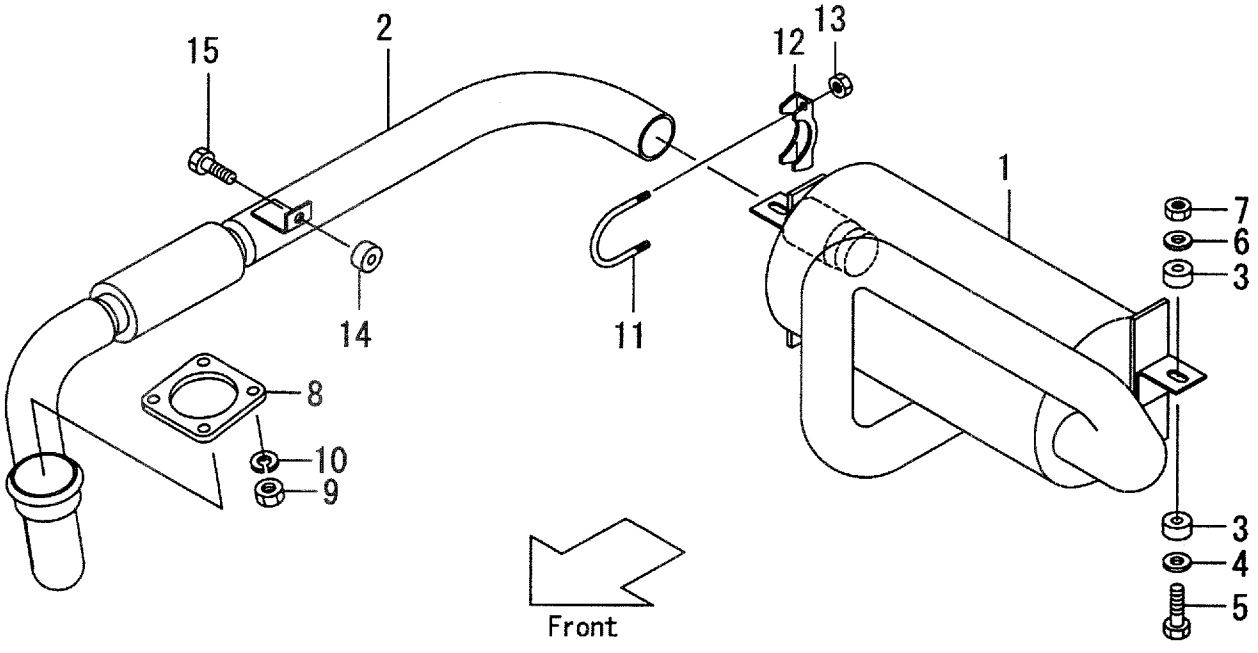

A:FD35C8 D:FD40T8 G:FD50T8 K:FG45T8
B:FD35T8 E:FD45C8 H:FG35T8 L:FG50T8
C:FD40C8 F:FD45T8 J:FG40T8

FIG.13
(F4042310)

Item No	Part No.	Mark	Description		Req'd	Remarks : Serial No.
1	235C2-32051		MUFFLER	ﾏﾌﾗ	1	A,B,C,D,E,F
-	235H2-32051		MUFFLER	ﾏﾌﾗ	1	G
-	535C1-70101		MUFFLER	ﾏﾌﾗ	1	A,B,C,D,E,F [EPM]
-	535H1-70101		MUFFLER	ﾏﾌﾗ	1	G [EPM]
-	535C1-70201		MUFFLER	ﾏﾌﾗ	1	A,B,C,D,E,F [CBM]
-	535H1-70201		MUFFLER	ﾏﾌﾗ	1	G [CBM]
2	235C2-32001		TUBE,FRONT	ﾁｭｰﾌﾞ	1	A,B,C,D,E,F,G
3	22252-32241		CUSHION	ｸｯｼｮﾝ	4	A,B,C,D,E,F,G
4	22252-32251		WASHER	ﾜｯｼｬ	2	A,B,C,D,E,F,G
5	21232-32551		BOLT	ﾎﾞﾙﾄ	2	A,B,C,D,E,F,G
6	02000-00010		WASHER	ﾜｯｼｬ	2	A,B,C,D,E,F,G
7	23652-12051		NUT	ﾅｯﾄ	2	A,B,C,D,E,F,G
8	25952-32011		PLATE	ﾌﾟﾚｰﾄ	1	A,B,C,D,E,F,G
9	01400-20010		NUT	ﾅｯﾄ	4	A,B,C,D,E,F,G
10	02010-00010		WASHER	ﾜｯｼｬ	4	A,B,C,D,E,F,G
A1	224W2-32301		CLAMP-ASSY	ｸﾗﾝﾌﾟｱｯｾﾝ	1	A,B,C,D,E,F,G INC.11-13
11	NO PART NO.	#	U-BOLT	Uﾎﾞﾙﾄ	1	A,B,C,D,E,F,G
12	NO PART NO.	#	CLAMP	ｸﾗﾝﾌﾟ	1	A,B,C,D,E,F,G
13	224W2-32311		NUT	ﾅｯﾄ	2	A,B,C,D,E,F,G
14	214A2-12001		RUBBER	ﾗﾊﾞｰ	1	A,B,C,D,E,F:1-107 G:1-101
-	22252-32241		RUBBER	ﾗﾊﾞｰ	1	A,B,C,D,E,F:108- G:102-
15	01182-10030		BOLT	ﾎﾞﾙﾄ	1	A,B,C,D,E,F:108- G:102-

FIG.14 EXHAUST SYSTEM

(F4042320) エキゾーストシステム

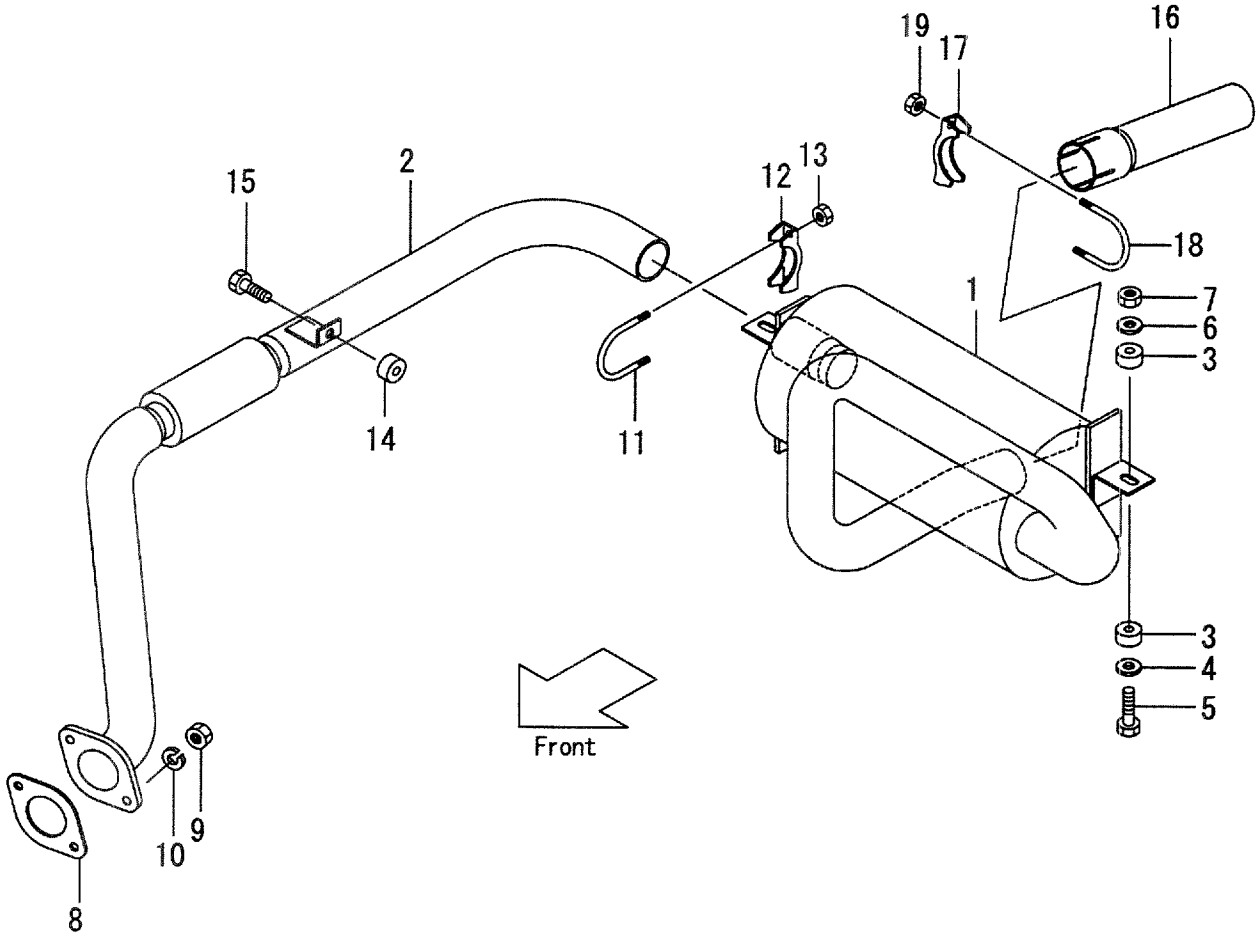

A:FD35C8 D:FD40T8 G:FD50T8 K:FG45T8
B:FD35T8 E:FD45C8 H:FG35T8 L:FG50T8
C:FD40C8 F:FD45T8 J:FG40T8

FIG.14
(F4042320)

Item No	Part No.	Mark	Description		Req'd	Remarks : Serial No.
1	235C2-32051		MUFFLER	ﾏﾌﾗ	1	H,J,K
-	235C2-32051		MUFFLER	ﾏﾌﾗ	1	L:1-101
-	235H2-32051		MUFFLER	ﾏﾌﾗ	1	L:102-
2	235L2-32001		TUBE,FRONT	ﾁｭｰﾌﾞ	1	H,J,K,L
3	22252-32241		CUSHION	ｸｯｼｮﾝ	4	H,J,K,L
4	22252-32251		WASHER	ﾜｯｼｬ	2	H,J,K,L
5	21232-32551		BOLT	ﾎﾞﾙﾄ	2	H,J,K,L
6	02000-00010		WASHER	ﾜｯｼｬ	2	H,J,K,L
7	23652-12051		NUT	ﾅｯﾄ	2	H,J,K,L
8	223W2-32021		GASKET	ｶﾞｽｹｯﾄ	1	H,J,K,L
9	01400-20010		NUT	ﾅｯﾄ	2	H,J,K,L
10	02010-00010		WASHER	ﾜｯｼｬ	2	H,J,K,L
A1	224W2-32301		CLAMP-ASSY	ｸﾗﾝﾌﾟｱｯｾﾝ	1	H,J,K,L
						INC.11-13
11	NO PART NO.	#	U-BOLT	Uﾎﾞﾙﾄ	1	H,J,K,L
12	NO PART NO.	#	CLAMP	ｸﾗﾝﾌﾟ	1	H,J,K,L
13	224W2-32311		NUT	ﾅｯﾄ	2	H,J,K,L
14	214A2-12001		RUBBER	ﾗﾊﾞｰ	1	H,J,K,L:1-102
-	22252-32241		RUBBER	ﾗﾊﾞｰ	1	H,J,K,L:103-
15	01182-10030		BOLT	ﾎﾞﾙﾄ	1	H,J,K,L:103-
16	235H2-32001		PIPE,TAIL	ﾊﾟｲﾌﾟ	1	L:1-101
A2	224W2-32301		CLAMP-ASSY	ｸﾗﾝﾌﾟｱｯｾﾝ	1	L:1-101
						INC.17-19
17	NO PART NO.	#	CLAMP	ｸﾗﾝﾌﾟ	1	L:1-101
18	NO PART NO.	#	U-BOLT	Uﾎﾞﾙﾄ	1	L:1-101
19	224W2-32311		NUT	ﾅｯﾄ	2	L:1-101

FIG.15 TAIL PIPE UPSIDE [TUE]

(F4042330) テールパイプアップサイド

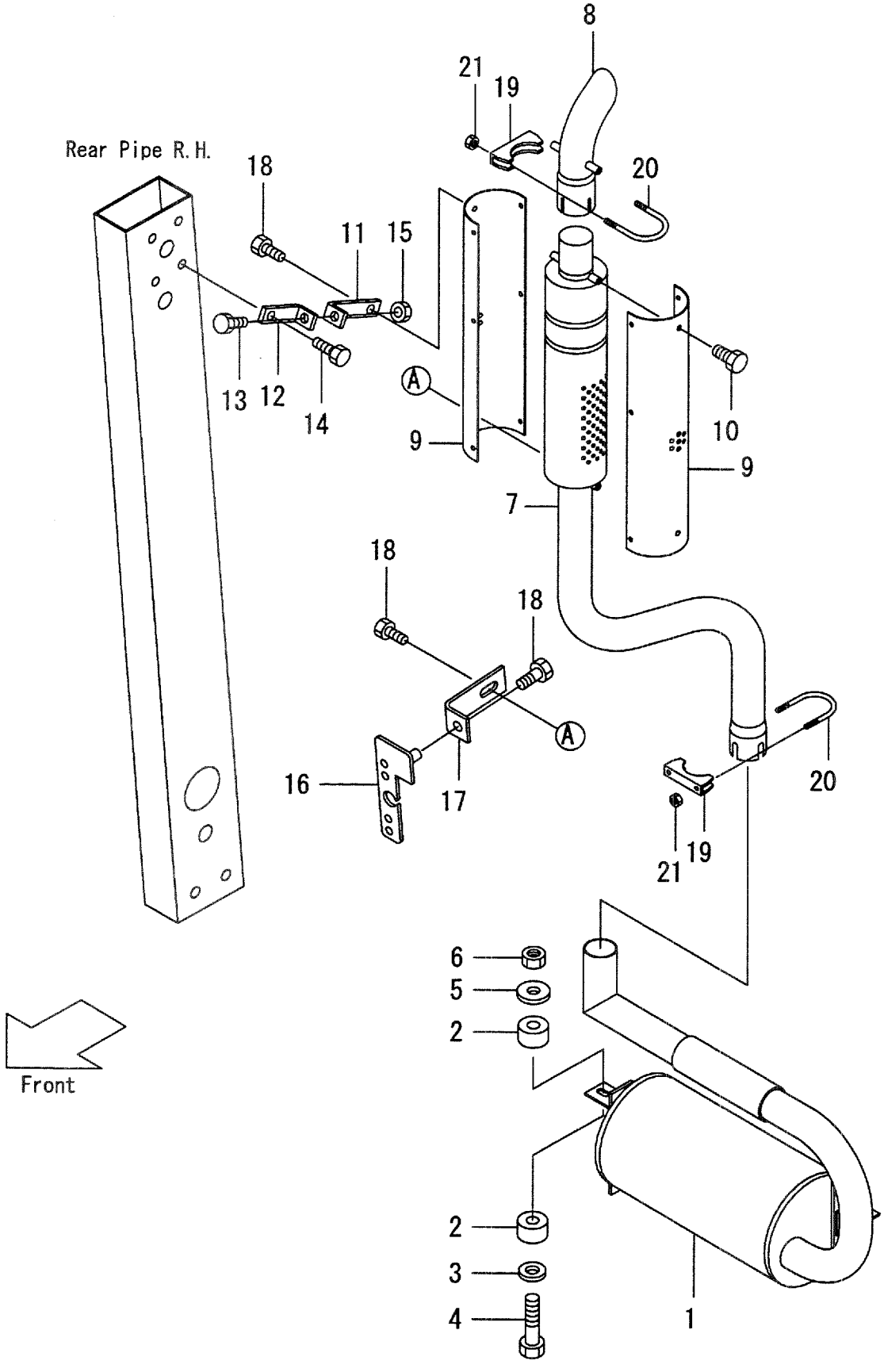

A:FD35C8 D:FD40T8 G:FD50T8 K:FG45T8
B:FD35T8 E:FD45C8 H:FG35T8 L:FG50T8
C:FD40C8 F:FD45T8 J:FG40T8

FIG.15
(F4042330)

Item No	Part No.	Mark	Description		Req'd	Remarks : Serial No.
1	535C0-82001		MUFFLER	ﾏﾌﾗ	1	[TUE]
-	535C0-82211		MUFFLER	ﾏﾌﾗ	1	[TUE/EPM]
-	535C0-82201		MUFFLER	ﾏﾌﾗ	1	[TUE/CBM]
2	22252-32241		CUSHION	ｸｯｼｮﾝ	4	[TUE]
3	22252-32251		WASHER	ﾜｯｼｬ	2	[TUE]
4	21232-32551		BOLT	ﾎﾞﾙﾄ	2	[TUE]
5	02000-00010		WASHER	ﾜｯｼｬ	2	[TUE]
6	23652-12051		NUT	ﾅｯﾄ	2	[TUE]
7	535C0-82101		PIPE,TAIL	ﾊﾟｲﾌﾟ	1	[TUE]
8	524W0-82131		PIPE,TAIL	ﾊﾟｲﾌﾟ	1	[TUE]
-	524T1-72001		PIPE,TAIL	ﾊﾟｲﾌﾟ	1	[TUE/HGL]
9	535C0-82071		GUARD	ｶﾞｰﾄﾞ	2	[TUE]
10	01185-10016		BOLT	ﾎﾞﾙﾄ	2	[TUE]
11	535C0-82021		STAY,A	ｽﾃｰ	1	[TUE]
12	535C0-82081		STAY,C	ｽﾃｰ	1	[TUE]
-	535C0-82151		STAY,C	ｽﾃｰ	1	[TUE/HGE][EXE]
-	535C0-82161		STAY,C	ｽﾃｰ	1	[TUE/HGH][EXN]
-	535C0-82171		STAY,C	ｽﾃｰ	1	[TUE]
13	01186-10030		BOLT	ﾎﾞﾙﾄ	1	[TUE]
14	01182-12030		BOLT	ﾎﾞﾙﾄ	1	[TUE]
15	01400-00010		NUT	ﾅｯﾄ	1	[TUE]
16	535C0-82031		BRACKET	ﾌﾞﾗｹｯﾄ	1	[TUE]
17	535C0-82041		STAY,B	ｽﾃｰ	1	[TUE]
18	01186-10025		BOLT	ﾎﾞﾙﾄ	3	[TUE]
A1	224W2-32301		CLAMP-ASSY	ｸﾗﾝﾌﾟｱｯｾﾝ	2	[TUE] INC.19-21
19	201B2-32111		CLAMP	ｸﾗﾝﾌﾟ	2	[TUE]
20	201B2-32121		U-BOLT	Uﾎﾞﾙﾄ	2	[TUE]
21	224W2-32311		NUT	ﾅｯﾄ	4	[TUE]

FIG.16 TAIL PIPE UPSIDE [TUE/SCB]

(F4042340) テールパイプアップサイド

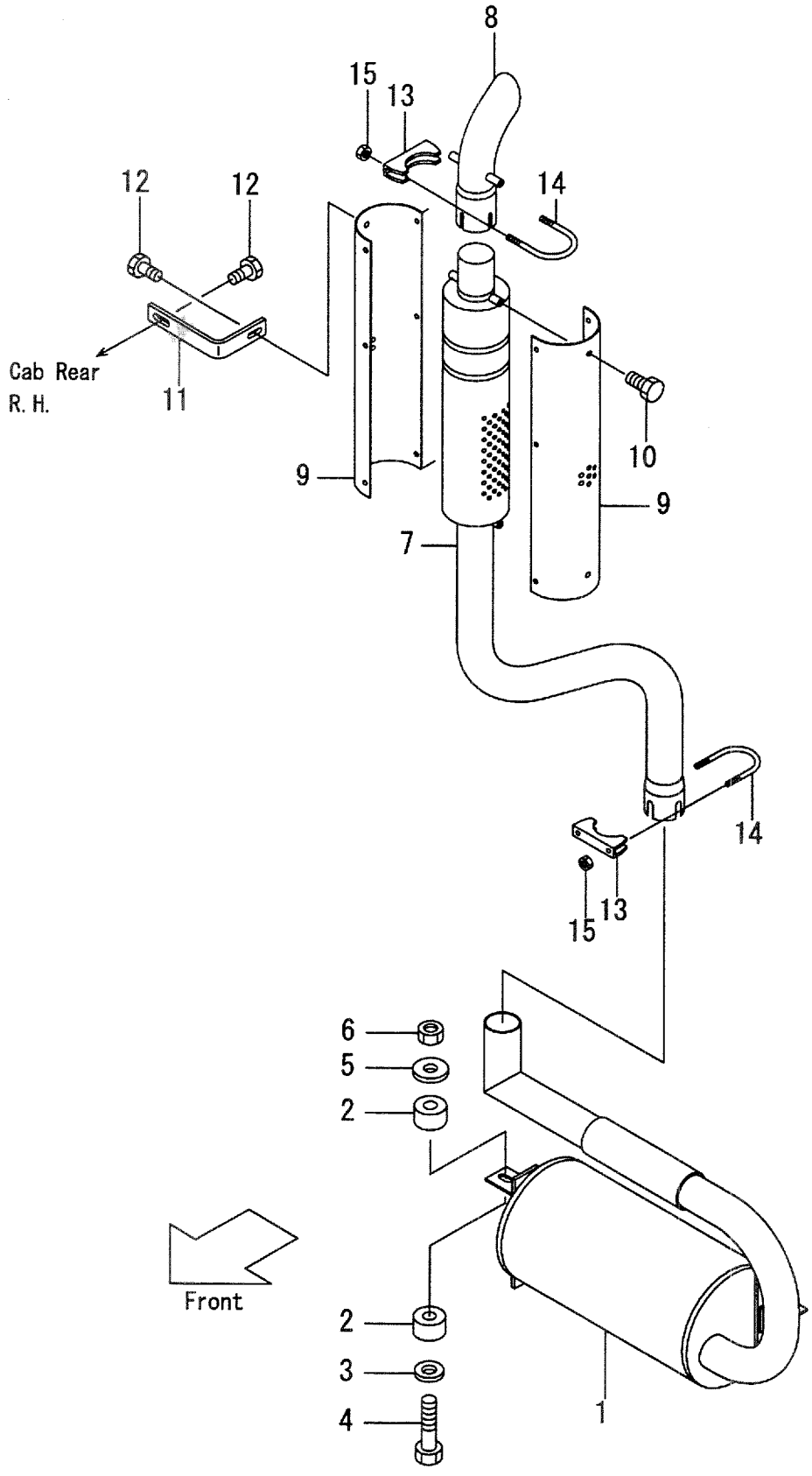

A:FD35C8 D:FD40T8 G:FD50T8 K:FG45T8
B:FD35T8 E:FD45C8 H:FG35T8 L:FG50T8
C:FD40C8 F:FD45T8 J:FG40T8

FIG.16
(F4042340)

Item No	Part No.	Mark	Description		Req'd	Remarks : Serial No.
1	535C0-82001		MUFFLER	ﾏﾌﾗ	1	[TUE/SCB]
2	22252-32241		CUSHION	ｸｯｼｮﾝ	4	[TUE/SCB]
3	22252-32251		WASHER	ﾜｯｼｬ	2	[TUE/SCB]
4	21232-32551		BOLT	ﾎﾞﾙﾄ	2	[TUE/SCB]
5	02000-00010		WASHER	ﾜｯｼｬ	2	[TUE/SCB]
6	23652-12051		NUT	ﾅｯﾄ	2	[TUE/SCB]
7	535C0-82101		PIPE,TAIL	ﾊﾟｲﾌﾟ	1	[TUE/SCB]
8	524W0-82131		PIPE,TAIL	ﾊﾟｲﾌﾟ	1	[TUE/SCB]
9	535C0-82071		GUARD	ｶﾞｰﾄﾞ	2	[TUE/SCB]
10	01185-10016		BOLT	ﾎﾞﾙﾄ	2	[TUE/SCB]
11	535C5-32301		BRACKET	ﾌﾞﾗｹｯﾄ	2	[TUE/SCB]
12	01186-10025		BOLT	ﾎﾞﾙﾄ	4	[TUE/SCB]
A1	224W2-32301		CLAMP-ASSY	ｸﾗﾝﾌﾟｱｯｾﾝ	2	[TUE/SCB] INC.13-15
13	201B2-32111		CLAMP	ｸﾗﾝﾌﾟ	2	[TUE/SCB]
14	201B2-32121		U-BOLT	Uﾎﾞﾙﾄ	2	[TUE/SCB]
15	224W2-32311		NUT	ﾅｯﾄ	4	[TUE/SCB]

FIG.17 COMBINATION METER

(F4042410) コンビネーションメータ

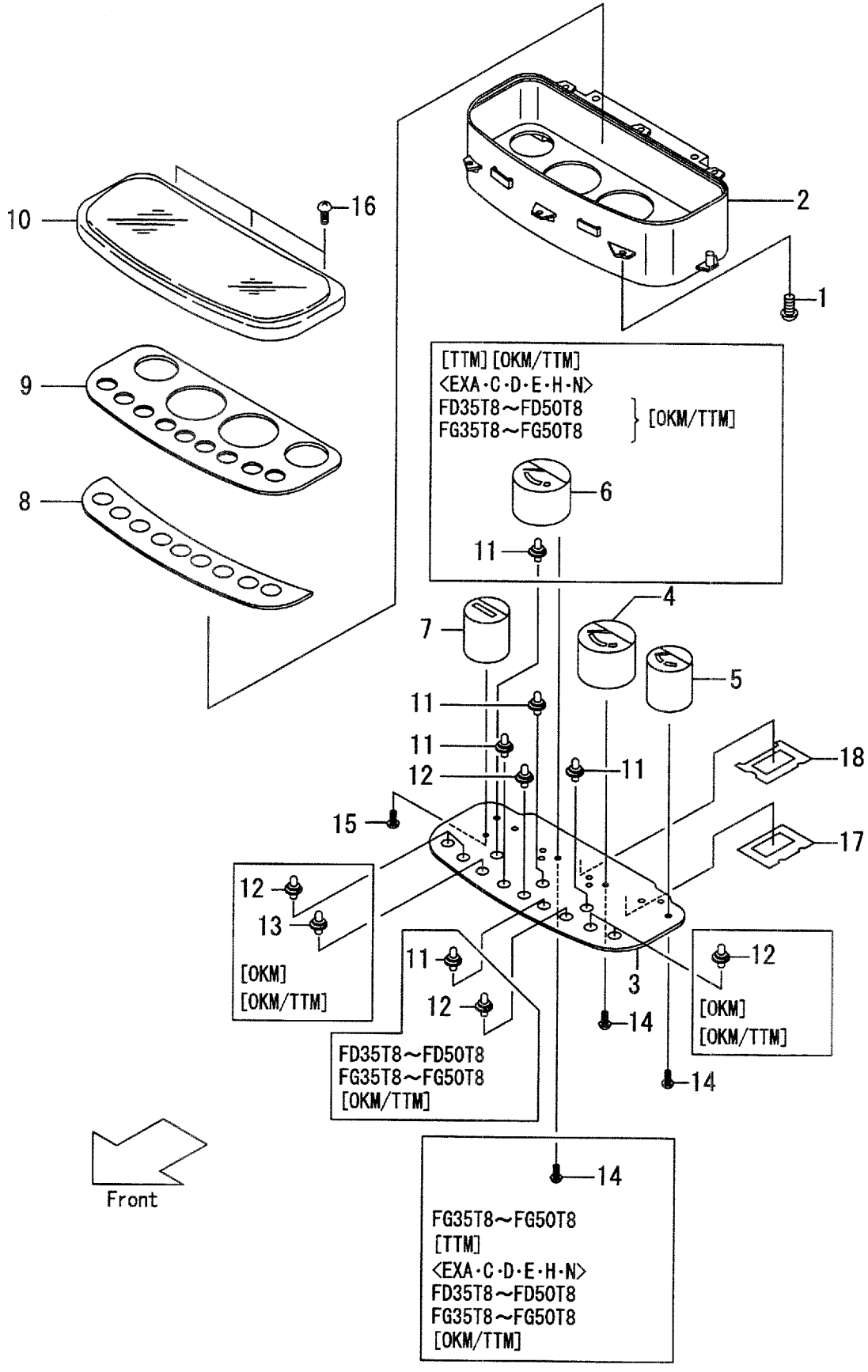

A:FD35C8 D:FD40T8 G:FD50T8 K:FG45T8
B:FD35T8 E:FD45C8 H:FG35T8 L:FG50T8
C:FD40C8 F:FD45T8 J:FG40T8

FIG.17
(F4042410)

Item No	Part No.	Mark	Description		Req'd	Remarks : Serial No.
1	222A2-42031		SCREW	ｽｸﾘｭ	5	A,B,C,D,E,F,G
-	222A2-42031		SCREW	ｽｸﾘｭ	5	H,J,K,L
-	222A2-42031		SCREW	ｽｸﾘｭ	6	A,B,C,D,E,F,G [OKM]
-	222A2-42031		SCREW	ｽｸﾘｭ	6	H,J,K,L [OKM]
-	222A2-42031		SCREW	ｽｸﾘｭ	9	B,D,F,G [OKM/TTM]
-	222A2-42031		SCREW	ｽｸﾘｭ	9	H,J,K,L [OKM/TTM]
-	222A2-42031		SCREW	ｽｸﾘｭ	5	A,B,C,D,E,F,G [TTM][EXA][EXC][EXD][EXE] [EXH][EXN]
-	222A2-42031		SCREW	ｽｸﾘｭ	9	H,J,K,L [TTM][EXA][EXC][EXD][EXE] [EXH][EXN]
A1	230C2-40101		METER-ASSY,COMBINATION	ﾒｰﾀｱｯｾﾝ	1	A,B,C,D,E,F,G INC.2-5,7-12,14-18
-	235L2-40201		METER-ASSY,COMBINATION	ﾒｰﾀｱｯｾﾝ	1	H,J,K,L INC.2-5,7-12,14-18
-	535C6-20201		METER-ASSY,COMBINATION	ﾒｰﾀｱｯｾﾝ	1	A,B,C,D,E,F,G [OKM] INC.2-5,7-18
-	516G6-20101		METER-ASSY,COMBINATION	ﾒｰﾀｱｯｾﾝ	1	H,J,K,L [OKM] INC.2-5,7-18
-	230C2-40151		METER-ASSY,COMBINATION	ﾒｰﾀｱｯｾﾝ	1	B,D,F,G [OKM/TTM] INC.2-18
-	516G6-20201		METER-ASSY,COMBINATION	ﾒｰﾀｱｯｾﾝ	1	H,J,K,L [OKM/TTM] INC.2-18
-	230C2-40161		METER-ASSY,COMBINATION	ﾒｰﾀｱｯｾﾝ	1	A,B,C,D,E,F,G [TTM][EXA][EXC][EXD][EXE] [EXH][EXN] INC.2-12,14-18
-	517H8-80101		METER-ASSY,COMBINATION	ﾒｰﾀｱｯｾﾝ	1	H,J,K,L:1-141 [TTM][EXA][EXC][EXD][EXE] [EXH][EXN] INC.2-12,14-18
-	535L8-80101		METER-ASSY,COMBINATION	ﾒｰﾀｱｯｾﾝ	1	H,J,K:142- L:103- [TTM][EXA][EXC][EXD][EXE] [EXH][EXN] INC.2-12,14-18
2	216G2-43201		HOUSING	ﾊｳｼﾞﾝｸﾞ	1	
3	230C2-42221		CIRCUIT,PRINTED	ｻｰｷｯﾄ	1	A,B,C,D,E,F,G
-	516G6-22051		CIRCUIT,PRINTED	ｻｰｷｯﾄ	1	H,J,K,L
-	230C2-42211		CIRCUIT,PRINTED	ｻｰｷｯﾄ	1	A,B,C,D,E,F,G [OKM]
-	230C2-42211		CIRCUIT,PRINTED	ｻｰｷｯﾄ	1	B,D,F,G [OKM/TTM]
-	216G2-43221		CIRCUIT,PRINTED	ｻｰｷｯﾄ	1	H,J,K:1-141 L:1-102 [TTM][EXA][EXC][EXD][EXE] [EXH][EXN]

FIG.17 COMBINATION METER

(F4042410) コンビネーションメータ

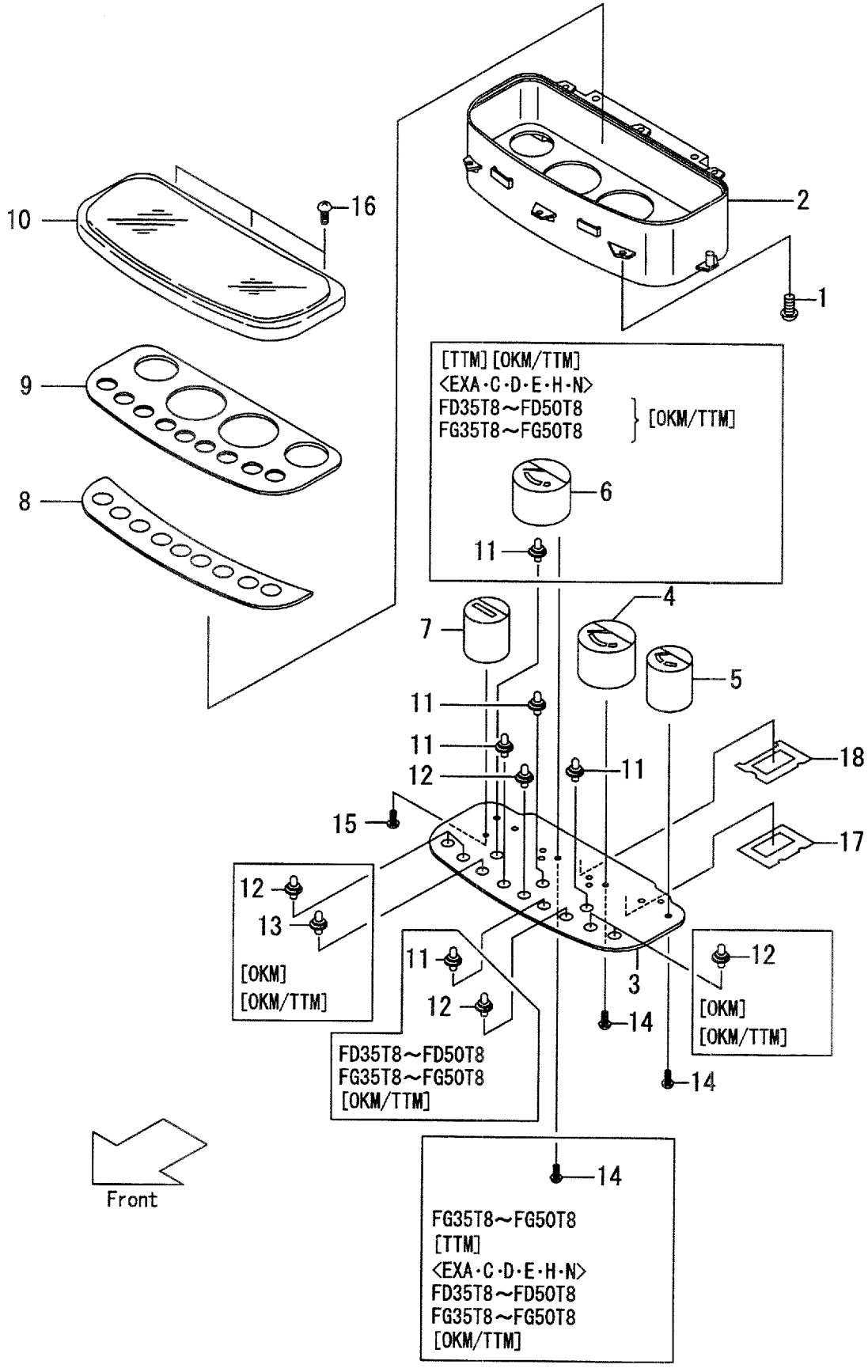

A:FD35C8 D:FD40T8 G:FD50T8 K:FG45T8
B:FD35T8 E:FD45C8 H:FG35T8 L:FG50T8
C:FD40C8 F:FD45T8 J:FG40T8

FIG.17
(F4042410)

Item No	Part No.	Mark	Description		Req'd	Remarks : Serial No.
-	516G6-22051		CIRCUIT,PRINTED	ｻｰｷｯﾄ	1	H,J,K:142- L:103- [TTM][EXA][EXC][EXD][EXE] [EXH][EXN]
4	232W2-42201		GAUGE,WATER-TEMP	ｹﾞｰｼﾞ	1	A,B,C,D,E,F,G
-	216G2-43231		GAUGE,WATER-TEMP	ｹﾞｰｼﾞ	1	H,J,K,L
5	232W2-42211		GAUGE,FUEL	ｹﾞｰｼﾞ	1	A,B,C,D,E,F,G
-	216G2-43241		GAUGE,FUEL	ｹﾞｰｼﾞ	1	H,J,K,L
6	232W2-42181		GAUGE,OIL-TEMP	ｹﾞｰｼﾞ	1	A,B,C,D,E,F,G [TTM][EXA][EXC][EXD][EXE] [EXH][EXN]
-	216G2-43251		GAUGE,OIL-TEMP	ｹﾞｰｼﾞ	1	H,J,K,L [TTM][EXA][EXC][EXD][EXE] [EXH][EXN]
-	232W2-42181		GAUGE,OIL-TEMP	ｹﾞｰｼﾞ	1	B,D,F,G [OKM/TTM]
-	216G2-43251		GAUGE,OIL-TEMP	ｹﾞｰｼﾞ	1	H,J,K,L [OKM/TTM]
7	216G2-43261		METER,HOUR	ﾒｰﾀ	1	
8	216G2-43271		LENS	ﾚﾝｽﾞ	1	
9	216G2-43281		PLATE	ﾌﾟﾚｰﾄ	1	
-	216G2-43281		PLATE	ﾌﾟﾚｰﾄ	1	A,B,C,D,E,F,G [OKM]
-	216G2-43291		PLATE	ﾌﾟﾚｰﾄ	1	B,D,F,G [OKM/TTM]
-	216G2-43291		PLATE	ﾌﾟﾚｰﾄ	1	[TTM][EXA][EXC][EXD][EXE] [EXH][EXN]
10	216G2-43301		COVER	ｶﾊﾞｰ	1	
11	522A7-12051		SOCKET & BULB	ｿｹｯﾄ&ﾊﾞﾙﾌﾞ	3	A,B,C,D,E,F,G
-	222A2-42331		SOCKET & BULB	ｿｹｯﾄ&ﾊﾞﾙﾌﾞ	3	H,J,K,L
-	522A7-12051		SOCKET & BULB	ｿｹｯﾄ&ﾊﾞﾙﾌﾞ	3	A,B,C,D,E,F,G [OKM]
-	522A7-12051		SOCKET & BULB	ｿｹｯﾄ&ﾊﾞﾙﾌﾞ	4	B,D,F,G [OKM/TTM]
-	222A2-42331		SOCKET & BULB	ｿｹｯﾄ&ﾊﾞﾙﾌﾞ	3	H,J,K,L [OKM]
-	222A2-42331		SOCKET & BULB	ｿｹｯﾄ&ﾊﾞﾙﾌﾞ	4	H,J,K,L [OKM/TTM]
-	222A2-42331		SOCKET & BULB	ｿｹｯﾄ&ﾊﾞﾙﾌﾞ	5	H,J,K:1-141 L:1-102 [TTM][EXA][EXC][EXD][EXE] [EXH][EXN]
-	222A2-42331		SOCKET & BULB	ｿｹｯﾄ&ﾊﾞﾙﾌﾞ	4	H,J,K:142- L:103- [TTM][EXA][EXC][EXD][EXE] [EXH][EXN]
12	522A7-12301		SOCKET & BULB	ｿｹｯﾄ&ﾊﾞﾙﾌﾞ	2	A,B,C,D,E,F,G
-	222A2-42401		SOCKET & BULB	ｿｹｯﾄ&ﾊﾞﾙﾌﾞ	2	H,J,K,L
-	522A7-12301		SOCKET & BULB	ｿｹｯﾄ&ﾊﾞﾙﾌﾞ	5	A,B,C,D,E,F,G [OKM]

FIG.17 COMBINATION METER

(F4042410) コンビネーションメータ

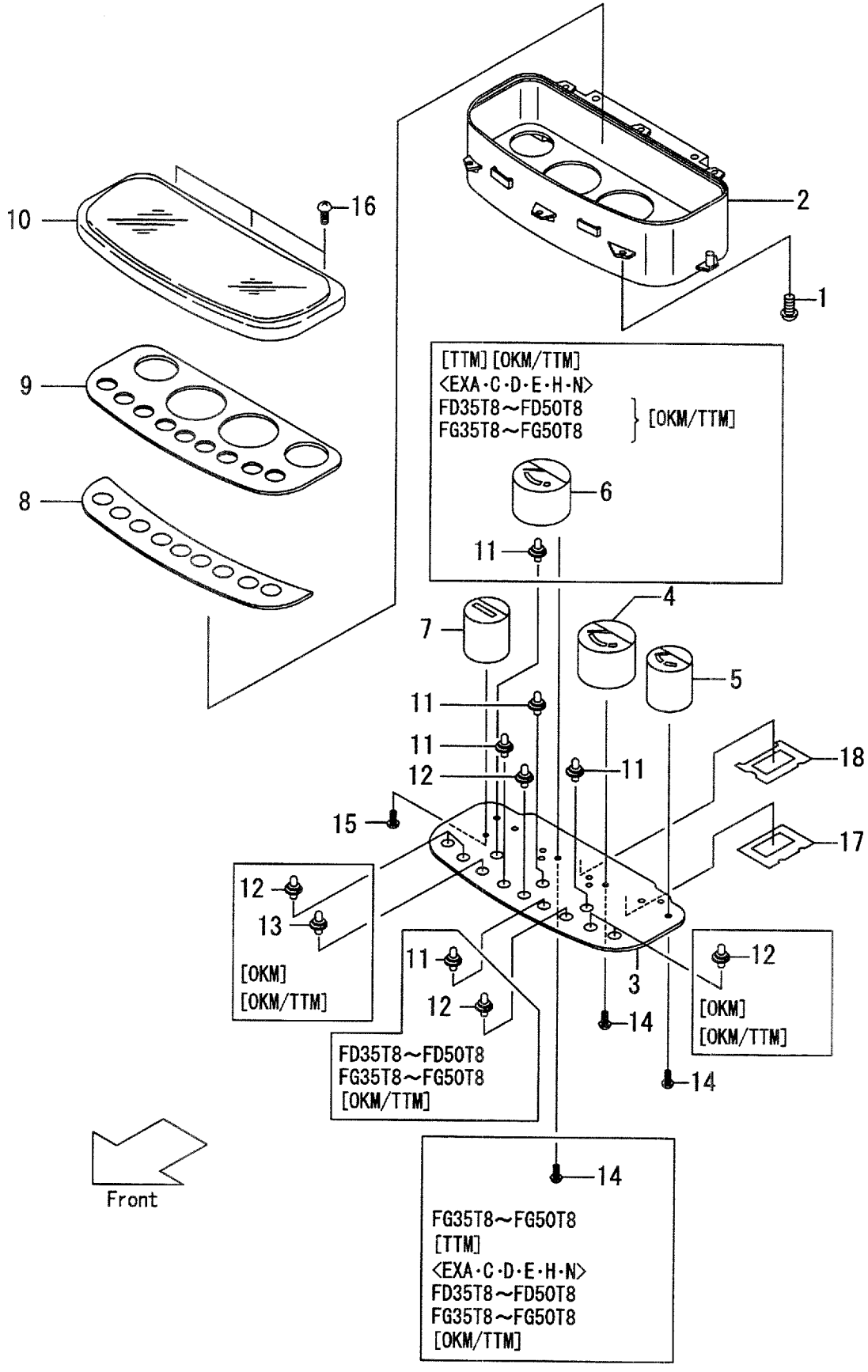

A:FD35C8 D:FD40T8 G:FD50T8 K:FG45T8
B:FD35T8 E:FD45C8 H:FG35T8 L:FG50T8
C:FD40C8 F:FD45T8 J:FG40T8

FIG.17
(F4042410)

Item No	Part No.	Mark	Description		Req'd	Remarks : Serial No.
-	522A7-12301		SOCKET & BULB	ｿｹｯﾄ&ﾊﾞﾙﾌﾞ	5	B,D,F,G [OKM/TTM]
-	222A2-42401		SOCKET & BULB	ｿｹｯﾄ&ﾊﾞﾙﾌﾞ	5	H,J,K,L [OKM][OKM/TTM]
13	224W2-42701		SOCKET & BULB	ｿｹｯﾄ&ﾊﾞﾙﾌﾞ	1	A,B,C,D,E,F,G [OKM]
-	224W2-42701		SOCKET & BULB	ｿｹｯﾄ&ﾊﾞﾙﾌﾞ	1	B,D,F,G [OKM/TTM]
-	222A2-42341		SOCKET & BULB	ｿｹｯﾄ&ﾊﾞﾙﾌﾞ	1	H,J,K,L [OKM][OKM/TTM]
14	229F2-42421		SCREW	ｽｸﾘｭ	6	
-	229F2-42421		SCREW	ｽｸﾘｭ	6	[OKM]
-	229F2-42421		SCREW	ｽｸﾘｭ	9	B,D,F,G,H,J,K,L [OKM/TTM]
-	229F2-42421		SCREW	ｽｸﾘｭ	9	H,J,K,L [TTM][EXA][EXC][EXD][EXE] [EXH][EXN]
15	229F2-42431		SCREW	ｽｸﾘｭ	3	
16	222A2-42361		SCREW	ｽｸﾘｭ	3	
17	516G6-22031		GASKET	ｶﾞｽｹｯﾄ	1	
18	216G2-43161		GASKET	ｶﾞｽｹｯﾄ	1	

FIG.18 ELECTRIC PARTS (C-TYPE)

(F4042420) エレクトリックパーツ

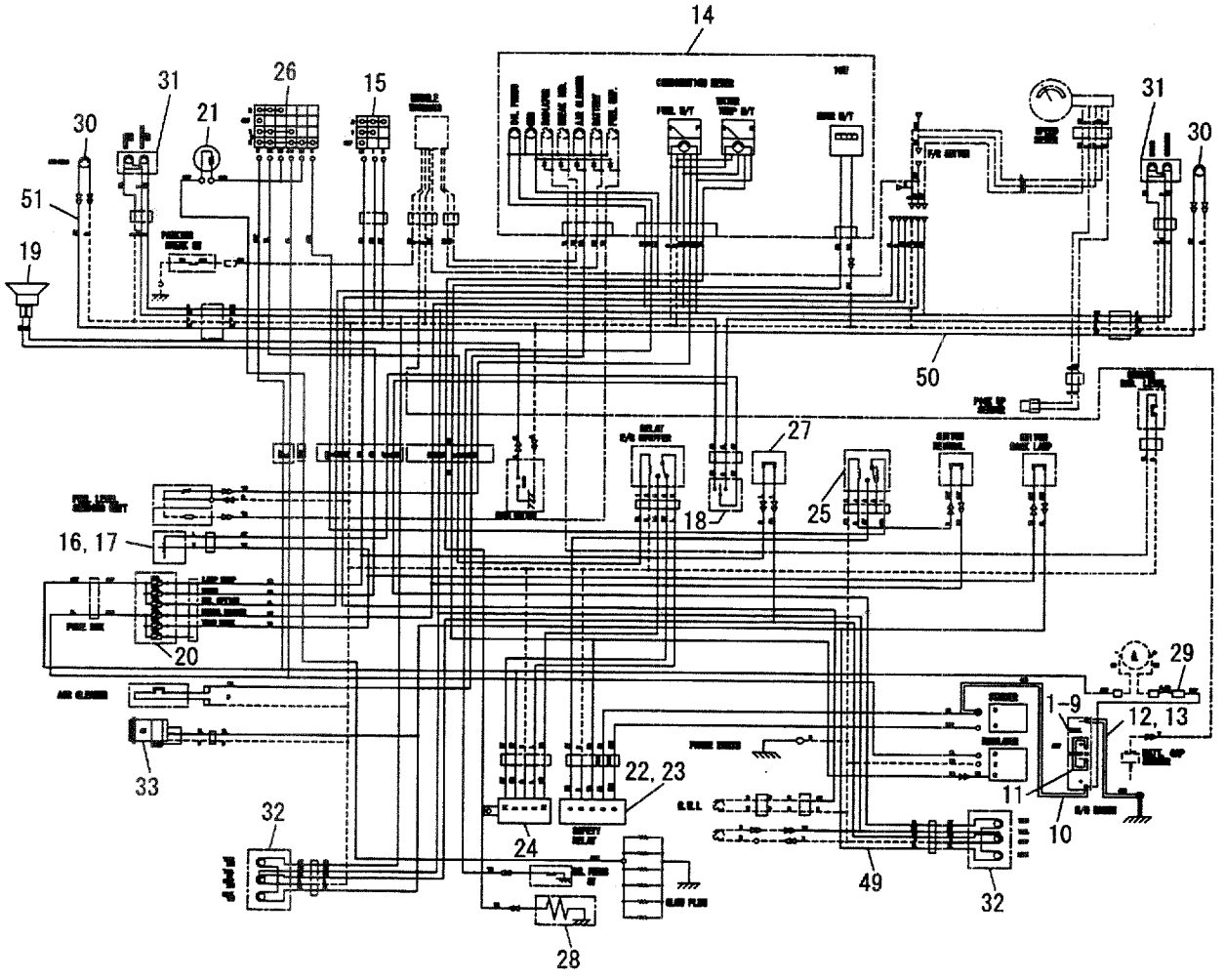

A:FD35C8 D:FD40T8 G:FD50T8 K:FG45T8
B:FD35T8 E:FD45C8 H:FG35T8 L:FG50T8
C:FD40C8 F:FD45T8 J:FG40T8

FIG.18
(F4042420)

Item No	Part No.	Mark	Description		Req'd	Remarks : Serial No.
1	05100-07001		BATTERY	ﾊﾞｯﾃﾘ	2	A,C,E:1-110
-	05000-07001		BATTERY	ﾊﾞｯﾃﾘ	2	A,C,E:111-
2	235C2-40101		CASE	ｹｰｽ	1	A,C,E
3	24232-42051		BOLT,ANCHOR	ﾎﾞﾙﾄ	2	A,C,E:1-110
-	235C2-40111		BOLT,ANCHOR	ﾎﾞﾙﾄ	2	A,C,E:111-
4	01420-00006		NUT	ﾅｯﾄ	2	A,C,E
5	02010-00006		WASHER	ﾜｯｼｬ	2	A,C,E
6	73452-42181		WASHER	ﾜｯｼｬ	2	A,C,E
7	01183-08012		BOLT	ﾎﾞﾙﾄ	2	A,C,E
8	217G2-42021		HOLDER	ﾎﾙﾀﾞ	2	A,C,E
9	216G2-43111		RUBBER	ﾗﾊﾞｰ	4	A,C,E
10	235C2-42171		CABLE,+	ｹｰﾌﾞﾙ	1	A,C,E
11	224W2-42411		CABLE,+,-	ｹｰﾌﾞﾙ	1	A,C,E:1-107
-	53657-12101		CABLE,+,-	ｹｰﾌﾞﾙ	1	A,C,E:108-110
-	235C2-42231		CABLE,+,-	ｹｰﾌﾞﾙ	1	A,C,E:111-
12	224W2-42421		CABLE,-	ｹｰﾌﾞﾙ	1	A,C,E:1-107
-	55777-12011		CABLE,-	ｹｰﾌﾞﾙ	1	A,C,E:108-110
-	55817-12051		CABLE,-	ｹｰﾌﾞﾙ	1	A,C,E:111-2545
-	25782-42181		CABLE,-	ｹｰﾌﾞﾙ	1	A,C,E:2546-
-	535C3-82001		CABLE,-	ｹｰﾌﾞﾙ	1	A,C,E:1-692 [EXD][EXE][EXN]
-	535C3-82002		CABLE,-	ｹｰﾌﾞﾙ	1	A,C,E:693- [EXD][EXE][EXN]
13	01185-08020		BOLT	ﾎﾞﾙﾄ	1	A,C,E
14	230C2-40101		METER,COMBINATION	ﾒｰﾀ	1	A,C,E SEE FIG.17
15	216G2-42302		SWITCH,LIGHTING	ｽｲｯﾁ	1	A,C,E
16	24352-42551		UNIT,FLASHER	ﾌﾗｯｼｬﾕﾆｯﾄ	1	A,C,E:1-2354
-	24352-42552		UNIT,FLASHER	ﾌﾗｯｼｬﾕﾆｯﾄ	1	A,C,E:2355-
17	01183-06012		BOLT	ﾎﾞﾙﾄ	6	A,C,E
18	214A2-40401		SWITCH,TURN-SIGNAL	ｽｲｯﾁ	1	A,C,E
19	23812-42002		HORN	ﾎｰﾝ	1	A,C,E
20	216G2-40801		BOX,FUSE	ﾎﾞｯｸｽ	1	A,C,E:1-772 INC.214T2-42311, 214T2-42321
-	235C2-40301		BOX,FUSE	ﾎﾞｯｸｽ	1	A,C,E:773- INC.214T2-42311, 214T2-42321
-	214T2-42311		FUSE,10A	ﾋｭｰｽﾞ	6	A,C,E
-	214T2-42321		FUSE,30A	ﾋｭｰｽﾞ	2	A,C,E
21	25782-42111		RESISTANCE,CONTROL	ﾚｼﾞｽﾀﾝｽ	1	A,C,E
22	25952-42031		RELAY,SAFETY	ﾘﾚｰ	1	A,C,E
23	01183-08012		BOLT	ﾎﾞﾙﾄ	2	A,C,E
24	224W2-42371		RELAY,AUTO-STOPPER	ﾘﾚｰ	1	A,C,E
25	24352-42531		RELAY,NEUTRAL	ﾘﾚｰ	1	A,C,E
26	20802-42161		SWITCH,STARTER	ｽｲｯﾁ	1	A,C,E
-	24352-42521		SWITCH,STARTER	ｽｲｯﾁ	1	A,C,E (NO CONTROL NO.)
-	522A3-82061		SWITCH,STARTER	ｽｲｯﾁ	1	A,C,E [EXE][EXN]

FIG.18 ELECTRIC PARTS (C-TYPE)

(F4042420) エレクトリックパーツ

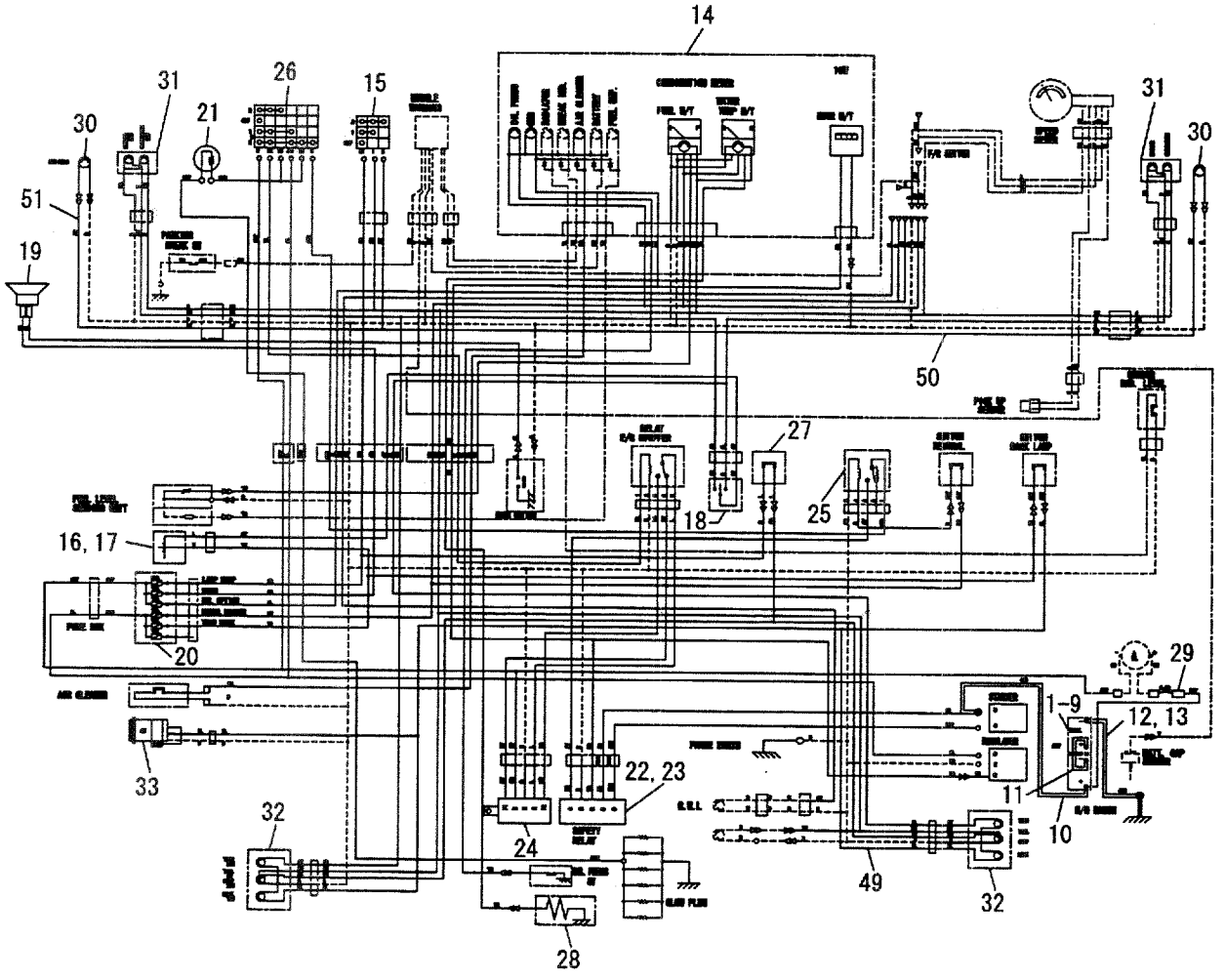

A:FD35C8 D:FD40T8 G:FD50T8 K:FG45T8
B:FD35T8 E:FD45C8 H:FG35T8 L:FG50T8
C:FD40C8 F:FD45T8 J:FG40T8

FIG.18
(F4042420)

Item No	Part No.	Mark	Description		Req'd	Remarks : Serial No.
27	23232-42072		SWITCH,STOP-LAMP	ｽｲｯﾁ	1	A,C,E
28	23652-44001		UNIT,SENDING	ｾﾝﾃﾞｨﾝｸﾞﾕﾆｯﾄ	1	A,C,E
29	224W2-42431		WIRE,FUSIBLE-LINK	ﾜｲﾔ	1	A,C,E
-	24602-42111		WIRE,FUSIBLE-LINK	ﾜｲﾔ	1	A,C,E
						[CRC][CRH][CRO]
30	235C2-42101		LAMP,HEAD	ﾗﾝﾌﾟ	2	A,C,E
						SEE FIG.22
31	230C2-40351		LAMP,COMBINATION,F	ﾗﾝﾌﾟ	2	A,C,E
						SEE FIG.22
32	514A7-10212		LAMP,COMBINATION,R	ﾗﾝﾌﾟ	2	A,C,E
						SEE FIG.22
33	235C2-42121		BUZZER,BACK	ﾌﾞｻﾞｰ	1	A,C,E
34	27042-42312	+	BAND	ﾊﾞﾝﾄﾞ	2	A,C,E
35	27042-42292	+	BAND	ﾊﾞﾝﾄﾞ	11	A,C,E
36	214A2-42331	+	CLIP	ｸﾘｯﾌﾟ	3	A,C,E
37	01184-10020	+	BOLT	ﾎﾞﾙﾄ	1	A,C,E
38	25592-42121	+	WIRE	ﾜｲﾔ	1	A,C,E
39	216G2-42131	+	BAND	ﾊﾞﾝﾄﾞ	14	A,C,E
40	04913-11200	+	BAND	ﾊﾞﾝﾄﾞ	1	A,C,E
41	04913-10100	+	BAND	ﾊﾞﾝﾄﾞ	8	A,C,E
42	04913-11100	+	BAND	ﾊﾞﾝﾄﾞ	2	A,C,E
43	04913-10200	+	BAND	ﾊﾞﾝﾄﾞ	2	A,C,E
44	235C2-42021	+	BRACKET	ﾌﾞﾗｹｯﾄ	1	A,C,E
45	01183-08025	+	BOLT	ﾎﾞﾙﾄ	2	A,C,E
46	235C2-42191	+	PLATE	ﾌﾟﾚｰﾄ	1	A,C,E
-	535C4-12001	+	PLATE	ﾌﾟﾚｰﾄ	1	A,C,E
						[CRC][CRH][CRO]
47	222A2-42511	+	WIRE,LEAD	ﾜｲﾔ	1	A,C,E
						[RRL][RRL/TUE][SCB]
48	01183-08025	+	BOLT	ﾎﾞﾙﾄ	1	A,C,E
49	235C2-42061		WIRE-HARNESS,ENGINE	ﾜｲﾔﾊｰﾈｽ	1	A,C,E
50	235C2-42051		WIRE-HARNESS,FRONT	ﾜｲﾔﾊｰﾈｽ	1	A,C,E
51	235C2-42071		WIRE-HARNESS,HG	ﾜｲﾔﾊｰﾈｽ	2	A,C,E
52	04913-11100	+	BAND	ﾊﾞﾝﾄﾞ	2	A,C,E
53	01400-00008	+	NUT,BACK BUZZER	ﾅｯﾄ	1	A,C,E:189-
54	01420-00008	+	NUT	ﾅｯﾄ	1	A,C,E:1-692
						[EXD][EXE][EXN]
55	530C3-82361	+	TERMINAL	ﾀｰﾐﾅﾙ	1	A,C,E:693-
						[EXD][EXE][EXN]

FIG.19 ELECTRIC PARTS (T-TYPE)

(F4042430) エレクトリックパーツ

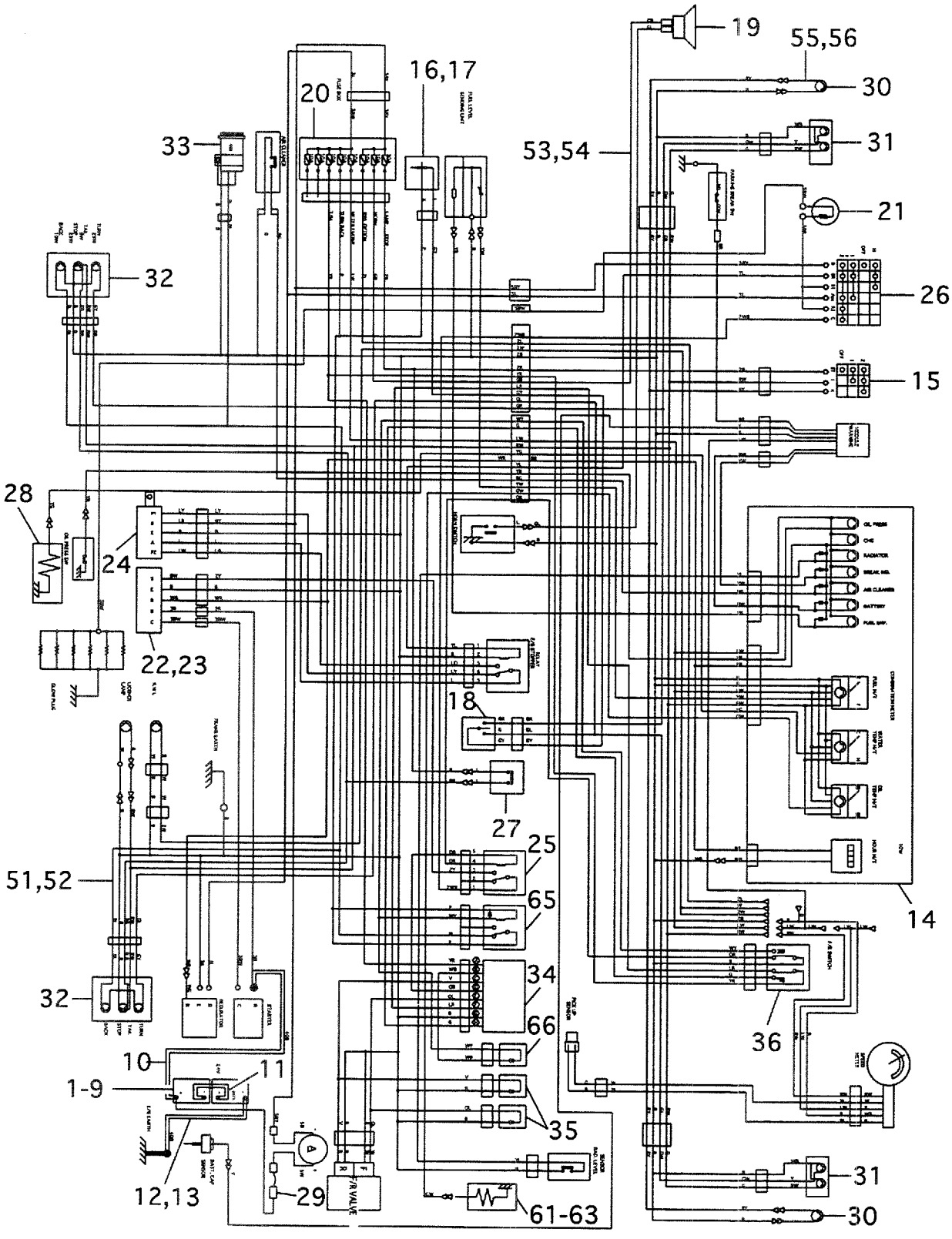

A:FD35C8 D:FD40T8 G:FD50T8 K:FG45T8
B:FD35T8 E:FD45C8 H:FG35T8 L:FG50T8
C:FD40C8 F:FD45T8 J:FG40T8

FIG.19
(F4042430)

Item No	Part No.	Mark	Description		Req'd	Remarks : Serial No.
1	05100-07001		BATTERY	ﾊﾞｯﾃﾘ	2	B,D,F:1-110 G:1-101
-	05000-07001		BATTERY	ﾊﾞｯﾃﾘ	2	B,D,F:111- G:102-
2	235C2-40101		CASE	ｹｰｽ	1	B,D,F,G
3	24232-42051		BOLT,ANCHOR	ﾎﾞﾙﾄ	2	B,D,F:1-110 G:1-101
-	235C2-40111		BOLT,ANCHOR	ﾎﾞﾙﾄ	2	B,D,F:111- G:102-
4	01420-00006		NUT	ﾅｯﾄ	2	B,D,F,G
5	02010-00006		WASHER	ﾜｯｼｬ	2	B,D,F,G
6	73452-42181		WASHER	ﾜｯｼｬ	2	B,D,F,G
7	01183-08012		BOLT	ﾎﾞﾙﾄ	2	B,D,F,G
8	217G2-42021		HOLDER	ﾎﾙﾀﾞ	2	B,D,F,G
9	216G2-43111		RUBBER	ﾗﾊﾞｰ	4	B,D,F,G
10	235C2-42171		CABLE,+	ｹｰﾌﾞﾙ	1	B,D,F,G
11	224W2-42411		CABLE,+,-	ｹｰﾌﾞﾙ	1	B,D,F:1-107 G:1-101
-	53657-12101		CABLE,+,-	ｹｰﾌﾞﾙ	1	B,D,F:108-110 G:101-101
-	235C2-42231		CABLE,+,-	ｹｰﾌﾞﾙ	1	B,D,F:111- G:102-
12	224W2-42421		CABLE,-	ｹｰﾌﾞﾙ	1	B,D,F:1-107 G:1-101
-	55777-12011		CABLE,-	ｹｰﾌﾞﾙ	1	B,D,F:108-110 G:101-101
-	55817-12051		CABLE,-	ｹｰﾌﾞﾙ	1	B,D,F:111-2545 G:102-609
-	25782-42181		CABLE,-	ｹｰﾌﾞﾙ	1	B,D,F:2546- G:610-
-	535C3-82001		CABLE,-	ｹｰﾌﾞﾙ	1	B,D,F:1-692 G:1-221 [EXD][EXE][EXN]
-	535C3-82002		CABLE,-	ｹｰﾌﾞﾙ	1	B,D,F:693- G:222- [EXD][EXE][EXN]
13	01185-08020		BOLT	ﾎﾞﾙﾄ	1	B,D,F,G
14	230C2-40101		METER,COMBINATION	ﾒｰﾀ	1	B,D,F,G SEE FIG.17
15	23652-42221		SWITCH,LIGHTING	ｽｲｯﾁ	1	B,D,F,G
16	24352-42551		UNIT,FLASHER	ﾌﾗｯｼｬﾕﾆｯﾄ	1	B,D,F:1-2354 G:1-547
-	24352-42552		UNIT,FLASHER	ﾌﾗｯｼｬﾕﾆｯﾄ	1	B,D,F:2355- G:548-
17	01183-06012		BOLT	ﾎﾞﾙﾄ	6	B,D,F,G
18	214A2-40401		SWITCH,TURN-SIGNAL	ｽｲｯﾁ	1	B,D,F,G
19	23812-42002		HORN	ﾎｰﾝ	1	B,D,F,G

FIG.19 ELECTRIC PARTS (T-TYPE)

(F4042430) エレクトリックパーツ

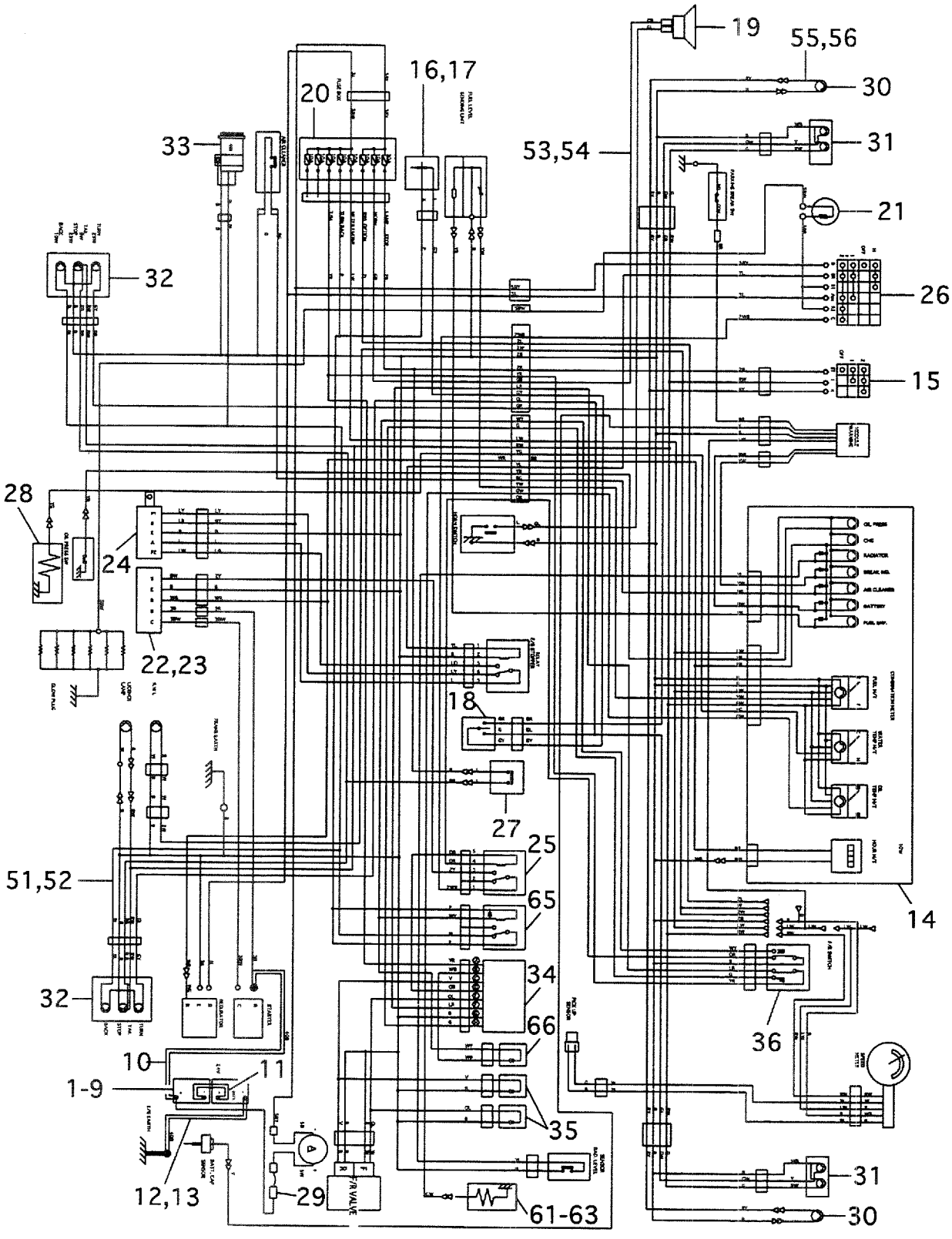

A:FD35C8 D:FD40T8 G:FD50T8 K:FG45T8
B:FD35T8 E:FD45C8 H:FG35T8 L:FG50T8
C:FD40C8 F:FD45T8 J:FG40T8

FIG.19
(F4042430)

Item No	Part No.	Mark	Description		Req'd	Remarks : Serial No.
20	216G2-40801		BOX,FUSE	ﾎﾞｯｸｽ	1	B,D,F:1-772 G:1-208 INC.214T2-42311, 214T2-42321
-	235C2-40301		BOX,FUSE	ﾎﾞｯｸｽ	1	B,D,F:773- G:209- INC.214T2-42311, 214T2-42321
-	214T2-42311		FUSE,10A	ﾋｭｰｽﾞ	6	B,D,F,G
-	214T2-42321		FUSE,30A	ﾋｭｰｽﾞ	2	B,D,F,G
21	25782-42111		RESISTANCE,CONTROL	ﾚｼﾞｽﾀﾝｽ	1	B,D,F,G
22	25952-42031		RELAY,SAFETY	ﾘﾚｰ	1	B,D,F,G
23	01183-08012		BOLT	ﾎﾞﾙﾄ	2	B,D,F,G
24	224W2-42371		RELAY,AUTO-STOPPER	ﾘﾚｰ	1	B,D,F,G
25	24352-42531		RELAY,NEUTRAL	ﾘﾚｰ	1	B,D,F,G
26	20802-42161		SWITCH,STARTER	ｽｲｯﾁ	1	B,D,F,G
-	24352-42521		SWITCH,STARTER	ｽｲｯﾁ	1	B,D,F,G (NO CONTROL NO.)
-	522A3-82061		SWITCH,STARTER	ｽｲｯﾁ	1	B,D,F,G [EXE][EXN]
27	23232-42072		SWITCH,STOP-LAMP	ｽｲｯﾁ	1	B,D,F,G
28	23652-44001		UNIT,SENDING	ｾﾝﾃﾞｨﾝｸﾞﾕﾆｯﾄ	1	B,D,F,G
29	224W2-42431		WIRE,FUSIBLE-LINK	ﾜｲﾔ	1	B,D,F,G
-	24602-42111		WIRE,FUSIBLE-LINK	ﾜｲﾔ	1	B,D,F,G [CRC][CRH][CRO]
30	235C2-42101		LAMP,HEAD	ﾗﾝﾌﾟ	2	B,D SEE FIG.22
-	235H2-42101		LAMP,HEAD	ﾗﾝﾌﾟ	2	F,G SEE FIG.22
31	230C2-40351		LAMP,COMBINATION,F	ﾗﾝﾌﾟ	2	B,D,F,G SEE FIG.22
32	514A7-10212		LAMP,COMBINATION	ﾗﾝﾌﾟ	2	B,D,F,G SEE FIG.22
33	235C2-42121		BUZZER,BACK	ﾌﾞｻﾞｰ	1	B,D,F,G
34	235E2-42201		UNIT,RELAY	ﾘﾚｰﾕﾆｯﾄ	1	B,D,F,G
35	230C2-42201		UNIT,DIODE	ﾀﾞｲｵｰﾄﾞﾕﾆｯﾄ	2	B,D,F,G
36	135H2-60201		UNIT,CONTROL	ｺﾝﾄﾛｰﾙﾕﾆｯﾄ	1	F,G SEE FIG.23
37	27042-42312	+	BAND	ﾊﾞﾝﾄﾞ	2	B,D,F,G
38	27042-42292	+	BAND	ﾊﾞﾝﾄﾞ	11	B,D,F,G
39	214A2-42331	+	CLIP	ｸﾘｯﾌﾟ	3	B,D,F,G
40	01184-10020	+	BOLT	ﾎﾞﾙﾄ	1	B,D,F,G
41	25592-42121	+	WIRE	ﾜｲﾔ	1	B,D,F,G
42	216G2-42131	+	BAND	ﾊﾞﾝﾄﾞ	14	B,D,F,G
43	04913-11200	+	BAND	ﾊﾞﾝﾄﾞ	1	B,D,F,G
44	04913-10100	+	BAND	ﾊﾞﾝﾄﾞ	8	B,D,F,G
45	04913-11100	+	BAND	ﾊﾞﾝﾄﾞ	2	B,D,F,G
46	04913-10200	+	BAND	ﾊﾞﾝﾄﾞ	2	B,D,F,G
47	235C2-42021	+	BRACKET	ﾌﾞﾗｹｯﾄ	1	B,D,F,G
48	01183-08025	+	BOLT	ﾎﾞﾙﾄ	2	B,D,F,G

FIG.19 ELECTRIC PARTS (T-TYPE)

(F4042430) エレクトリックパーツ

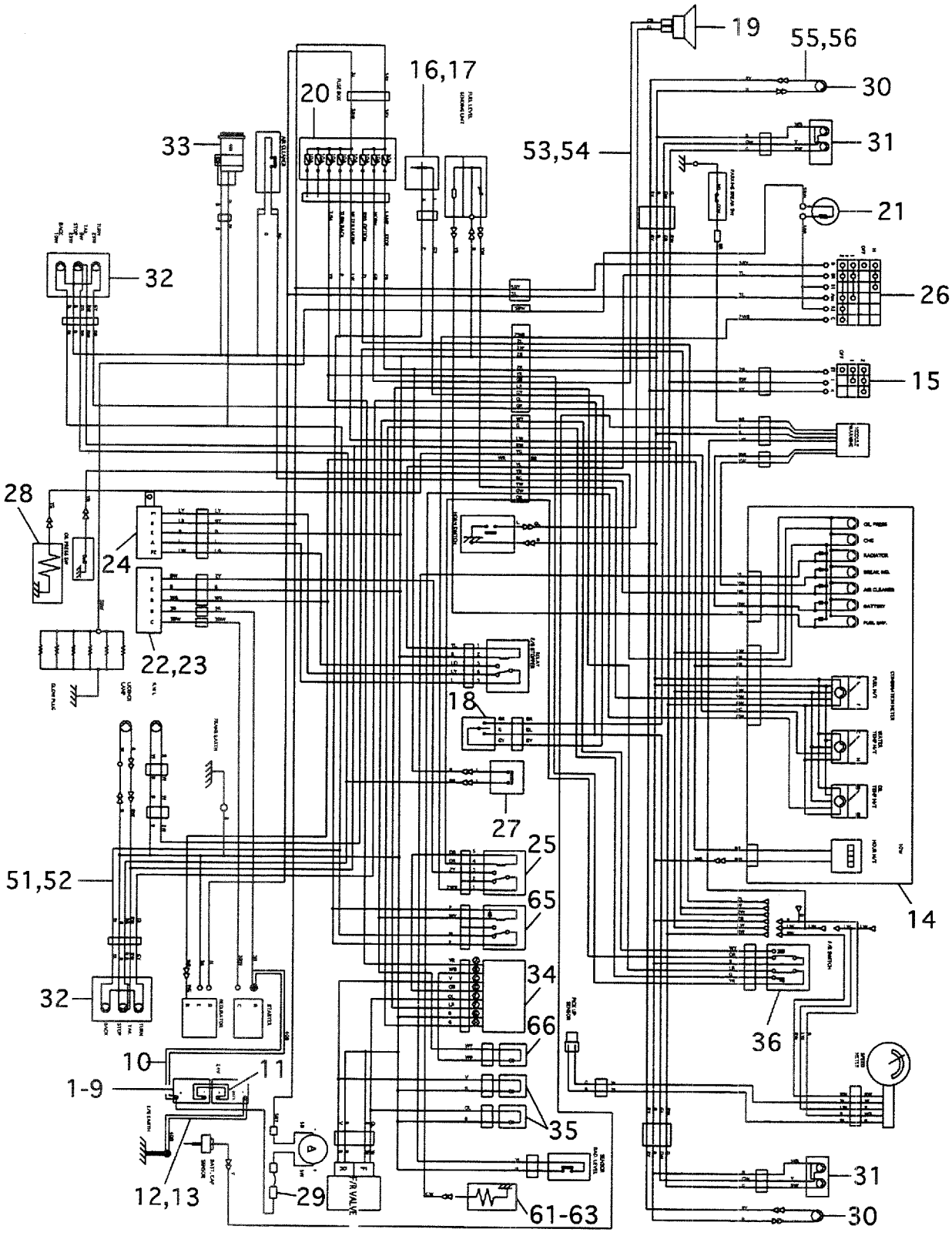

A:FD35C8 D:FD40T8 G:FD50T8 K:FG45T8
B:FD35T8 E:FD45C8 H:FG35T8 L:FG50T8
C:FD40C8 F:FD45T8 J:FG40T8

FIG.19
(F4042430)

Item No	Part No.	Mark	Description		Req'd	Remarks : Serial No.
49	235C2-42191	+	PLATE	ﾌﾟﾚｰﾄ	1	B,D,F,G
-	535C4-12001	+	PLATE	ﾌﾟﾚｰﾄ	1	B,D,F,G [CRC][CRH][CRO]
50	222A2-42511	+	WIRE,LEAD	ﾜｲﾔ	1	B,D,F,G [RRL][RRL/TUE][SCB/RRE]
51	235E2-42021		WIRE-HARNESS,ENGINE	ﾜｲﾔﾊｰﾈｽ	1	B,D:1-759
-	235E2-42023		WIRE-HARNESS,ENGINE	ﾜｲﾔﾊｰﾈｽ	1	B,D:760-
-	535E2-72201		WIRE-HARNESS,ENGINE	ﾜｲﾔﾊｰﾈｽ	1	B,D:1-759 [EXA]
-	535E2-72203		WIRE-HARNESS,ENGINE	ﾜｲﾔﾊｰﾈｽ	1	B,D:760- [EXA]
52	235G2-42021		WIRE-HARNESS,ENGINE	ﾜｲﾔﾊｰﾈｽ	1	F:1-759 G:1-206
-	235G2-42023		WIRE-HARNESS,ENGINE	ﾜｲﾔﾊｰﾈｽ	1	F:760- G:207-
-	535G2-72201		WIRE-HARNESS,ENGINE	ﾜｲﾔﾊｰﾈｽ	1	F:1-759 G:1-206 [EXA]
-	535G2-72203		WIRE-HARNESS,ENGINE	ﾜｲﾔﾊｰﾈｽ	1	F:760- G:207- [EXA]
53	235E2-42011		WIRE-HARNESS,FRONT	ﾜｲﾔﾊｰﾈｽ	1	B,D
-	235E2-72301		WIRE-HARNESS,FRONT	ﾜｲﾔﾊｰﾈｽ	1	B,D [EXA]
54	235G2-42011		WIRE-HARNESS,FRONT	ﾜｲﾔﾊｰﾈｽ	1	F,G
-	235G2-72301		WIRE-HARNESS,FRONT	ﾜｲﾔﾊｰﾈｽ	1	F,G [EXA]
55	235C2-42071		WIRE-HARNESS,HG	ﾜｲﾔﾊｰﾈｽ	2	B,D
-	535E2-72211		WIRE-HARNESS,HG	ﾜｲﾔﾊｰﾈｽ	2	B,D [EXA]
56	235M2-42031		WIRE-HARNESS,HG	ﾜｲﾔﾊｰﾈｽ	2	F,G
-	535M2-72211		WIRE-HARNESS,HG	ﾜｲﾔﾊｰﾈｽ	2	F,G [EXA]
57	04913-11100	+	BAND	ﾊﾞﾝﾄﾞ	2	B,D,F,G
58	01183-08025	+	BOLT	ﾎﾞﾙﾄ	1	B,D,F,G
59	01400-00008	+	NUT,BACK BUZZER	ﾅｯﾄ	1	B,D,F:189- G:107-
60	01402-00008	+	NUT	ﾅｯﾄ	1	B,D,F:1-692 G:1-221 [EXD][EXE][EXN]
61	23652-44001		UNIT,SENDING	ｾﾝﾃﾞｨﾝｸﾞﾕﾆｯﾄ	1	B,D,F,G [TTM][OKM][EXA][EXC][EXD] [EXE][EXN]
62	15943-83311		NIPPLE	ﾆｯﾌﾟﾙ	1	B,D,F,G [TTM][OKM][EXA][EXC][EXD] [EXE][EXN]
63	24252-42011		WIRE,LEAD	ﾜｲﾔ	1	B,D,F,G [TTM][OKM][EXA][EXC][EXD] [EXE][EXN]

FIG.19 ELECTRIC PARTS (T-TYPE)

(F4042430) エレクトリックパーツ

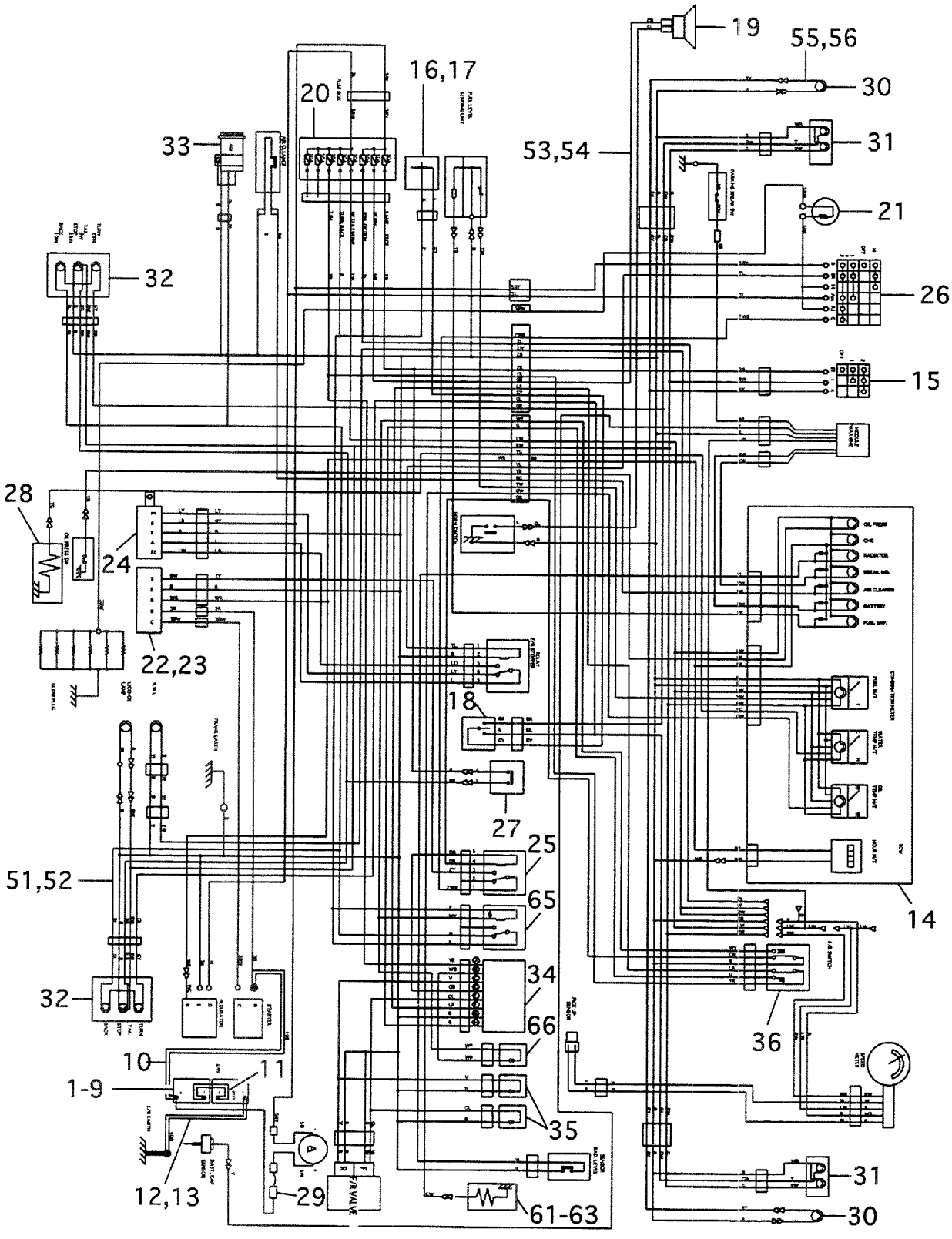

A:FD35C8 D:FD40T8 G:FD50T8 K:FG45T8
B:FD35T8 E:FD45C8 H:FG35T8 L:FG50T8
C:FD40C8 F:FD45T8 J:FG40T8

FIG.19
(F4042430)

Item No	Part No.	Mark	Description		Req'd	Remarks : Serial No.
64	530C3-82361	+	TERMINAL	ﾀｰﾐﾅﾙ	1	B,D,F:693- G:222- [EXD][EXE][EXN]
65	26402-42191		RELAY	ﾘﾚｰ	1	B,D,F:692- G:194-
66	21152-42091		DIODE	ﾀﾞｲｵｰﾄﾞ	1	B,D,F:760- G:207-

FIG.20 ELECTRIC PARTS

(F4042440) エレクトリックパーツ

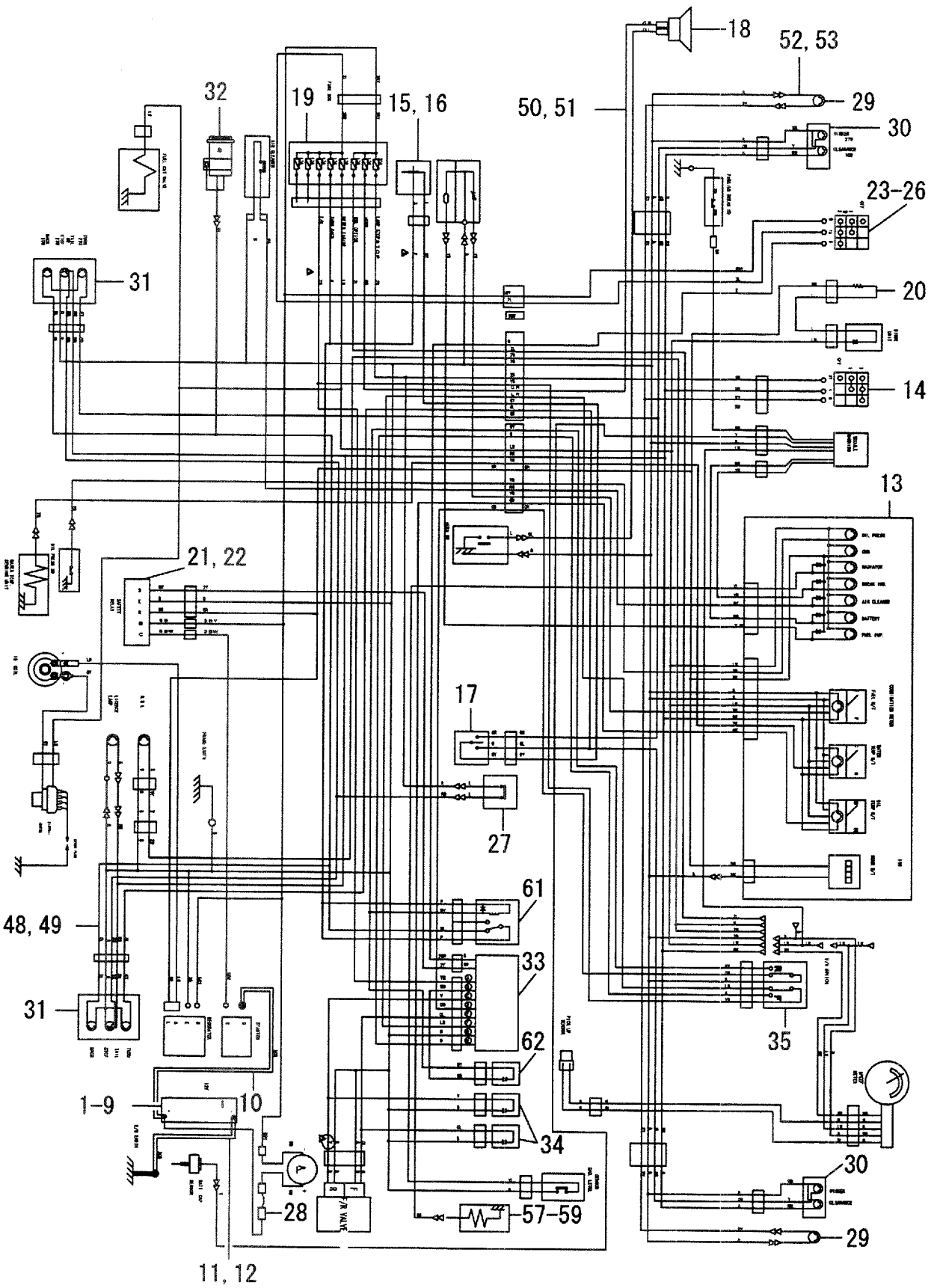

A:FD35C8 D:FD40T8 G:FD50T8 K:FG45T8
B:FD35T8 E:FD45C8 H:FG35T8 L:FG50T8
C:FD40C8 F:FD45T8 J:FG40T8

FIG.20
(F4042440)

Item No	Part No.	Mark	Description		Req'd	Remarks : Serial No.
1	225N2-42031		BATTERY,WET	ﾊﾞｯﾃﾘ	2	H,J,K,L:1-102
-	225N2-42031		BATTERY,WET	ﾊﾞｯﾃﾘ	1	H,J,K,L:103-
2	235N2-42001		CASE	ｹｰｽ	1	H,J,K,L
-	535L0-52111		CASE	ｹｰｽ	1	H,J,K,L [LPG][LPO]
3	24232-42051		BOLT,ANCHOR	ﾎﾞﾙﾄ	1	H,J,K,L:1-102
-	235C2-40111		BOLT,ANCHOR	ﾎﾞﾙﾄ	1	H,J,K,L:103-
4	01420-00006		NUT	ﾅｯﾄ	1	H,J,K,L
5	02010-00006		WASHER	ﾜｯｼｬ	1	H,J,K,L
6	73452-42181		WASHER	ﾜｯｼｬ	1	H,J,K,L
7	01183-08012		BOLT	ﾎﾞﾙﾄ	1	H,J,K,L
8	217G2-42021		HOLDER	ﾎﾙﾀﾞ	1	H,J,K,L
9	216G2-43111		RUBBER	ﾗﾊﾞｰ	2	H,J,K,L
10	223W2-42091		CABLE,+	ｹｰﾌﾞﾙ	1	H,J,K,L:1-102
-	235L2-42071		CABLE +	ｹｰﾌﾞﾙ	1	H,J,K,L:103-
11	223W2-42081		CABLE -	ｹｰﾌﾞﾙ	1	H,J,K,L
-	535L3-82001		CABLE -	ｹｰﾌﾞﾙ	1	H,J,K:1-174 L:1-106 [EXD][EXE][EXN]
-	535L3-82002		CABLE -	ｹｰﾌﾞﾙ	1	H,J,K:175- L:107- [EXD][EXE][EXN]
12	01185-08020	+	BOLT	ﾎﾞﾙﾄ	1	H,J,K,L
13	235L2-40201		METER,COMBINATION	ﾒｰﾀ	1	H,J,K,L SEE FIG.17
14	216G2-42302		SWITCH,LIGHTING	ｽｲｯﾁ	1	H,J
-	23652-42221		SWITCH,LIGHTING	ｽｲｯﾁ	1	K,L
15	24402-42051		UNIT,FLASHER	ﾌﾗｯｼｬﾕﾆｯﾄ	1	H,J,K:1-374 L:1-125
-	24402-42052		UNIT,FLASHER	ﾌﾗｯｼｬﾕﾆｯﾄ	1	H,J,K:375- L:126-
16	01183-06012		BOLT	ﾎﾞﾙﾄ	7	H,J,K,L
17	214A2-40401		SWITCH,TURN-SIGNAL	ｽｲｯﾁ	1	H,J,K,L
18	20712-40275		HORN	ﾎｰﾝ	1	H,J,K,L
19	216G2-40801		BOX,FUSE	ﾎﾞｯｸｽ	1	H,J,K:1-180 L:1-106 INC.214T2-42311, 214T2-42321
-	235C2-40301		BOX,FUSE	ﾎﾞｯｸｽ	1	H,J,K:181- L:107- INC.214T2-42311, 214T2-42321
-	214T2-42311		FUSE,10A	ﾋｭｰｽﾞ	6	H,J,K,L
-	214T2-42321		FUSE,30A	ﾋｭｰｽﾞ	2	H,J,K,L
20	21232-42142		RESISTANCE,CHG.LAMP	ﾚｼﾞｽﾀﾝｽ	1	H,J,K,L
21	223W2-42051		RELAY,SAFETY	ﾘﾚｰ	1	H,J,K,L
22	01183-08012		BOLT	ﾎﾞﾙﾄ	2	H,J,K,L
23	22192-42301		SWITCH,STARTER	ｽｲｯﾁ	1	H,J,K,L
24	235N2-42021		BRACKET	ﾌﾞﾗｹｯﾄ	1	H,J,K,L
25	01183-08025		BOLT	ﾎﾞﾙﾄ	2	H,J,K,L

FIG.20 ELECTRIC PARTS

(F4042440) エレクトリックパーツ

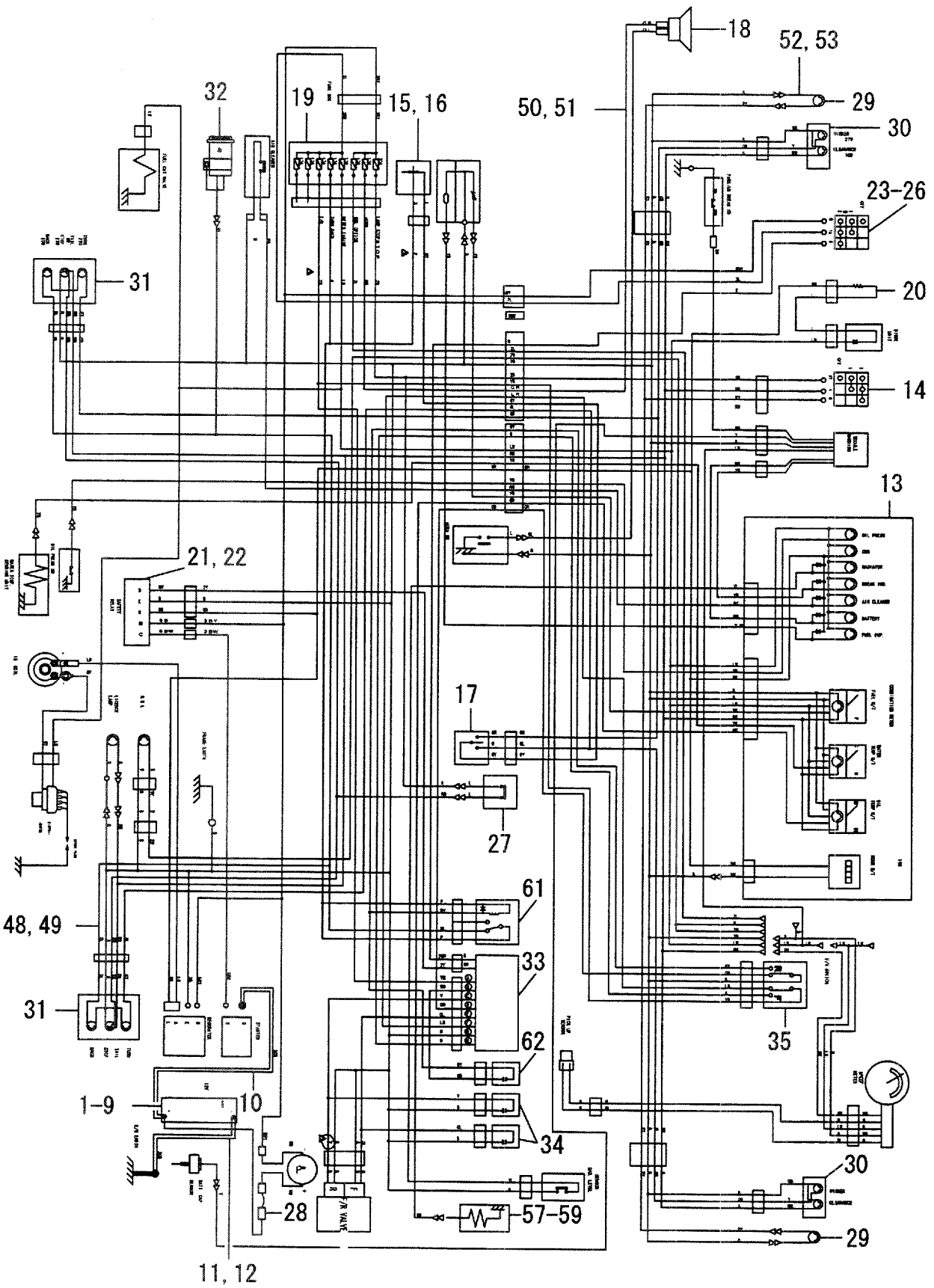

A:FD35C8 D:FD40T8 G:FD50T8 K:FG45T8
B:FD35T8 E:FD45C8 H:FG35T8 L:FG50T8
C:FD40C8 F:FD45T8 J:FG40T8

FIG.20
(F4042440)

Item No	Part No.	Mark	Description		Req'd	Remarks : Serial No.
26	235C2-42191		PLATE	ﾌﾟﾚｰﾄ	1	H,J,K,L
27	23232-42072		SWITCH,STOP-LAMP	ｽｲｯﾁ	1	H,J,K,L
28	224W2-42431		WIRE,FUSIBLE-LINK	ﾜｲﾔ	1	H,J,K,L
29	216G2-40602		LAMP,HEAD	ﾗﾝﾌﾟ	2	H,J
						SEE FIG.22
-	235N2-42101		LAMP,HEAD	ﾗﾝﾌﾟ	2	K,L
30	216G2-40701		LAMP,COMBINATION,F	ﾗﾝﾌﾟ	2	H,J,K,L
						SEE FIG.22
31	214A2-40202		LAMP,COMBINATION,R	ﾗﾝﾌﾟ	2	H,J,K,L
						SEE FIG.22
32	235C2-42121		BUZZER,BACK	ﾌﾞｻﾞｰ	1	H,J,K,L
33	235L2-42051		UNIT,RELAY	ﾘﾚｰﾕﾆｯﾄ	1	H,J,K,L
34	21152-42091		UNIT,DIODE,MOLD	ﾀﾞｲｵｰﾄﾞﾕﾆｯﾄ	2	H,J,K,L
35	135N2-60201		UNIT,CONTROL	ｺﾝﾄﾛｰﾙﾕﾆｯﾄ	1	K,L
						SEE FIG.23
36	27042-42312	+	BAND	ﾊﾞﾝﾄﾞ	2	H,J,K,L
37	27042-42292	+	BAND	ﾊﾞﾝﾄﾞ	11	H,J,K,L
38	214A2-42331	+	CLIP	ｸﾘｯﾌﾟ	3	H,J,K,L
39	01184-10020	+	BOLT	ﾎﾞﾙﾄ	1	H,J,K,L
40	25592-42121	+	WIRE	ﾜｲﾔ	1	H,J,K,L
41	216G2-42131	+	BAND	ﾊﾞﾝﾄﾞ	14	H,J,K,L
42	04913-11200	+	BAND	ﾊﾞﾝﾄﾞ	1	H,J,K,L
43	04913-10100	+	BAND	ﾊﾞﾝﾄﾞ	8	H,J,K,L
44	04913-11100	+	BAND	ﾊﾞﾝﾄﾞ	2	H,J,K,L
45	04913-10200	+	BAND	ﾊﾞﾝﾄﾞ	2	H,J,K,L
46	53657-12301	+	WIRE,LEAD	ﾜｲﾔ	1	H,J,K,L
47	01183-08025	+	BOLT	ﾎﾞﾙﾄ	1	H,J,K,L
48	235L2-42021		WIRE-HARNESS,ENGINE	ﾜｲﾔﾊｰﾈｽ	1	H,J:1-175
-	235L2-42023		WIRE-HARNESS,ENGINE	ﾜｲﾔﾊｰﾈｽ	1	H,J:176-
-	535L2-72201		WIRE-HARNESS,ENGINE	ﾜｲﾔﾊｰﾈｽ	1	H,J:1-175
						[EXA]
-	535L2-72203		WIRE-HARNESS,ENGINE	ﾜｲﾔﾊｰﾈｽ	1	H,J:176-
						[EXA]
49	235M2-42021		WIRE-HARNESS,ENGINE	ﾜｲﾔﾊｰﾈｽ	1	K:1-175
						L:1-106
-	235M2-42023		WIRE-HARNESS,ENGINE	ﾜｲﾔﾊｰﾈｽ	1	K:176-
						L:107-
-	535L2-72201		WIRE-HARNESS,ENGINE	ﾜｲﾔﾊｰﾈｽ	1	H,J:1-175
						[EXA]
-	535L2-72203		WIRE-HARNESS,ENGINE	ﾜｲﾔﾊｰﾈｽ	1	H,J:176-
						[EXA]
-	535M2-72201		WIRE-HARNESS,ENGINE	ﾜｲﾔﾊｰﾈｽ	1	K:112-175
						L:103-106
						[EXA]
-	535M2-72203		WIRE-HARNESS,ENGINE	ﾜｲﾔﾊｰﾈｽ	1	K:176-
						L:107-
						[EXA]
50	235L2-42011		WIRE-HARNESS,FRONT	ﾜｲﾔﾊｰﾈｽ	1	H,J
-	235L2-72301		WIRE-HARNESS,FRONT	ﾜｲﾔﾊｰﾈｽ	1	H,J
						[EXA]

FIG.20 ELECTRIC PARTS

(F4042440) エレクトリックパーツ

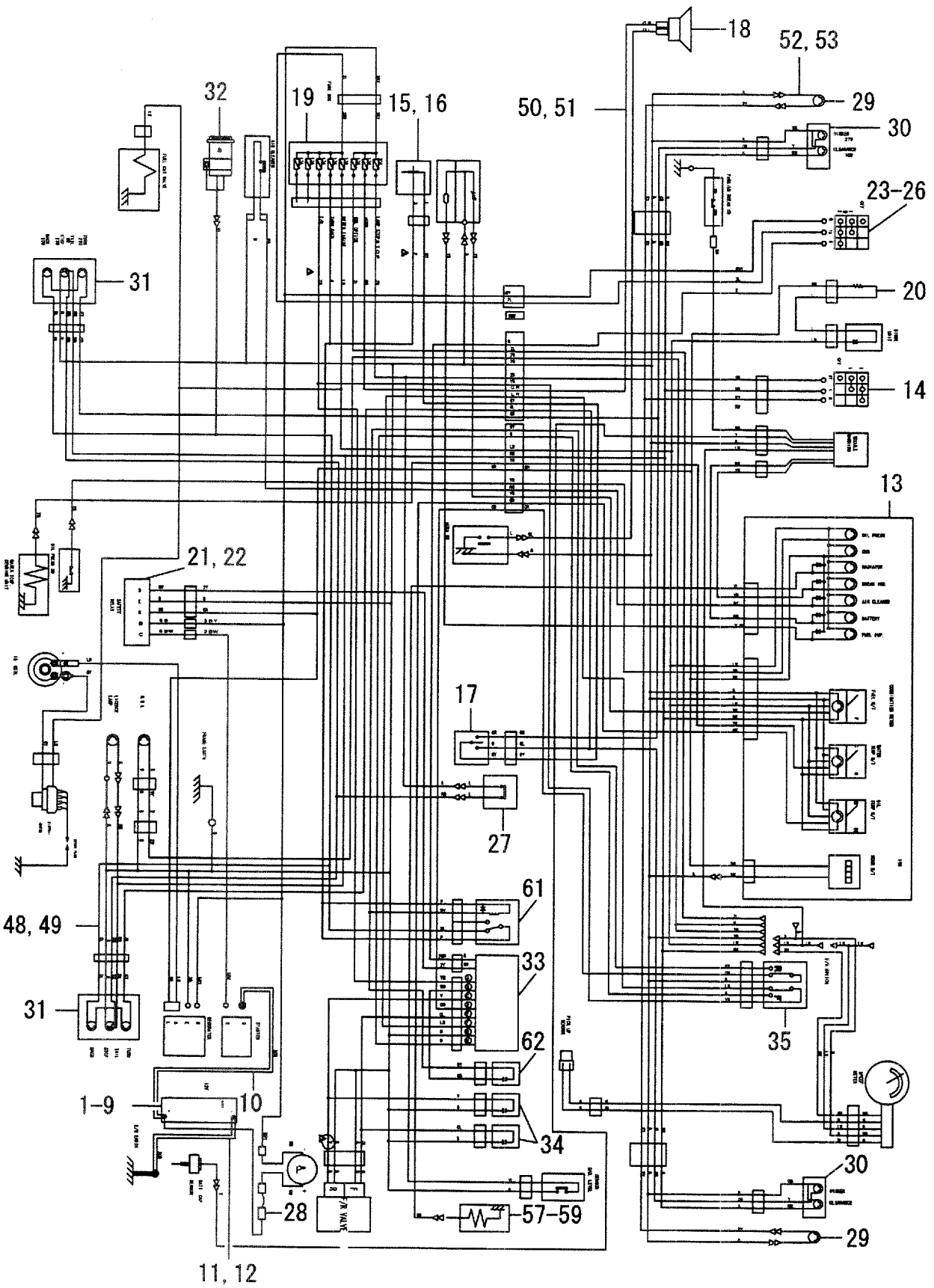

A:FD35C8 D:FD40T8 G:FD50T8 K:FG45T8
B:FD35T8 E:FD45C8 H:FG35T8 L:FG50T8
C:FD40C8 F:FD45T8 J:FG40T8

FIG.20
(F4042440)

Item No	Part No.	Mark	Description		Req'd	Remarks : Serial No.
51	235M2-42011		WIRE-HARNESS,FRONT	ﾜｲﾔﾊｰﾈｽ	1	K,L
-	235M2-72301		WIRE-HARNESS,FRONT	ﾜｲﾔﾊｰﾈｽ	1	K,L [EXA]
52	235C2-42071		WIRE-HARNESS,HG	ﾜｲﾔﾊｰﾈｽ	2	H,J
-	535E2-72211		WIRE-HARNESS,HG	ﾜｲﾔﾊｰﾈｽ	2	H,J [EXA]
53	235M2-42031		WIRE-HARNESS,HG	ﾜｲﾔﾊｰﾈｽ	2	K,L
-	535M2-72211		WIRE-HARNESS,HG	ﾜｲﾔﾊｰﾈｽ	2	K,L [EXA]
54	04913-11100	+	BAND	ﾊﾞﾝﾄﾞ	2	H,J,K,L
55	01400-00008	+	NUT,BACK BUZZER	ﾅｯﾄ	1	H,J,K,L:103-
56	01420-00008	+	NUT	ﾅｯﾄ	1	H,J,K:1-174 L:1-106 [EXD][EXE][EXN]
57	23652-44001		UNIT,SENDING	ｾﾝﾃﾞｨﾝｸﾞﾕﾆｯﾄ	1	H,J,K,L [TTM][OKM][EXA][EXC][EXD] [EXE][EXN]
58	15943-83311		NIPPLE	ﾆｯﾌﾟﾙ	1	H,J,K,L [TTM][OKM][EXA][EXC][EXD] [EXE][EXN]
59	24252-42011		WIRE,LEAD	ﾜｲﾔ	1	H,J,K,L [TTM][OKM][EXA][EXC][EXD] [EXE][EXN]
60	530C3-82361	+	TERMINAL	ﾀｰﾐﾅﾙ	1	H,J,K:175- L:107- [EXD][EXE][EXN]
61	26062-42881		RELAY	ﾘﾚｰ	1	H,J,K:172- L:107-
62	21152-42091		DIODE	ﾀﾞｲｵｰﾄﾞ	1	H,J,K:176- L:107-

FIG.21 ELECTRIC PARTS (COVER)

(F4042450) エレクトリックパーツ(カバー)

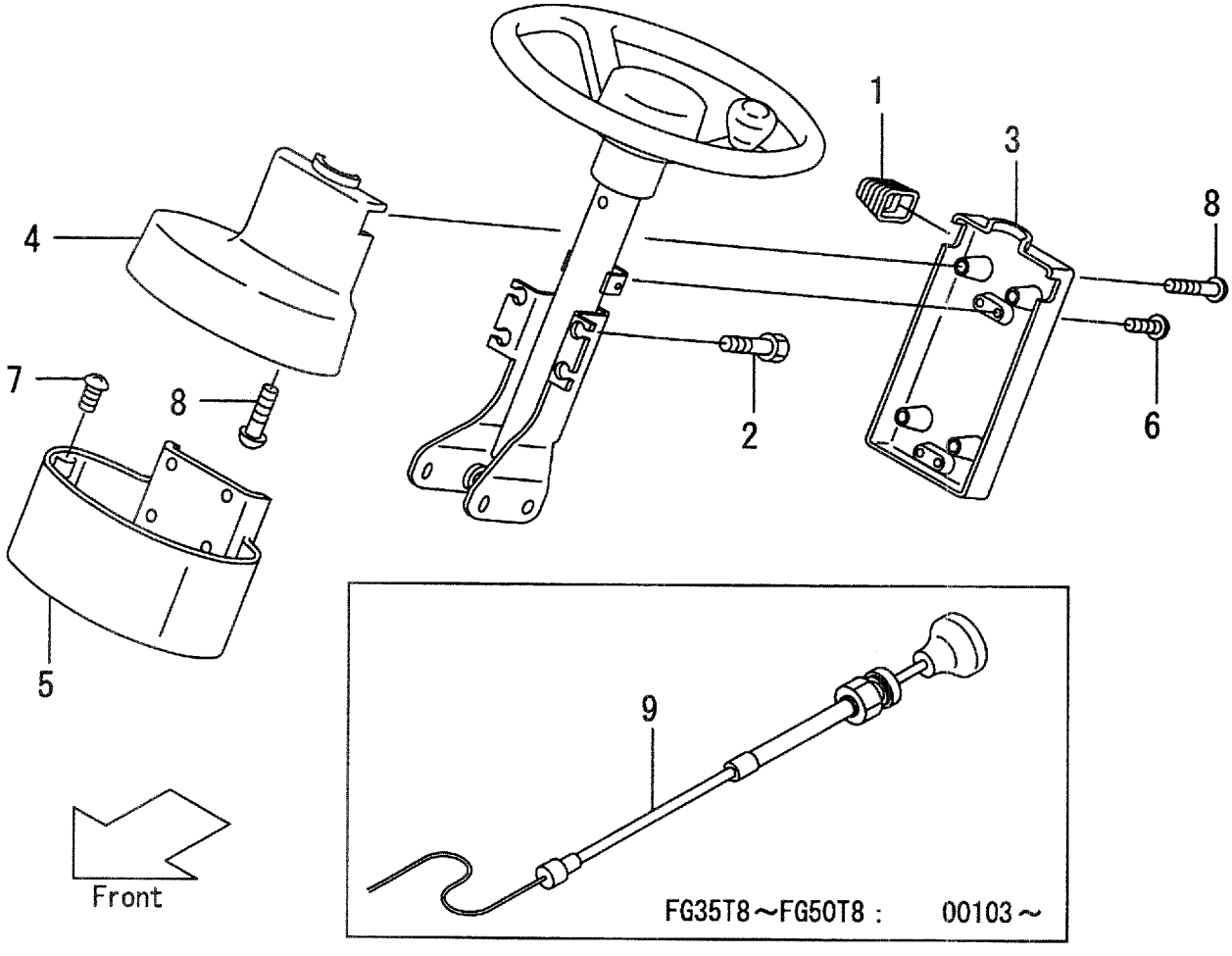

A:FD35C8 D:FD40T8 G:FD50T8 K:FG45T8
B:FD35T8 E:FD45C8 H:FG35T8 L:FG50T8
C:FD40C8 F:FD45T8 J:FG40T8

FIG.21
(F4042450)

Item No	Part No.	Mark	Description		Req'd	Remarks : Serial No.
1	216G4-12231		BOOT	ﾌﾞｰﾂ	1	
2	01185-06016		BOLT	ﾎﾞﾙﾄ	4	
3	216G4-12201		COVER,A	ｶﾊﾞｰ	1	
4	216G4-12211		COVER,B	ｶﾊﾞｰ	1	
5	230C4-12501		COVER,C	ｶﾊﾞｰ	1	
6	214A6-42771		SCREW	ｽｸﾘｭ	4	
7	216G4-12091		SCREW	ｽｸﾘｭ	2	
8	222A2-42031		SCREW	ｽｸﾘｭ	4	
9	23031-12002		WIRE,CHOKE,L-1713	ﾜｲﾔ	1	H,J,K,L:1-102
-	221A1-12001		WIRE,CHOKE,L-2113	ﾜｲﾔ	1	H,J,K,L:103-

FIG.22 LIGHT UNIT

(F4042460) ライトユニット

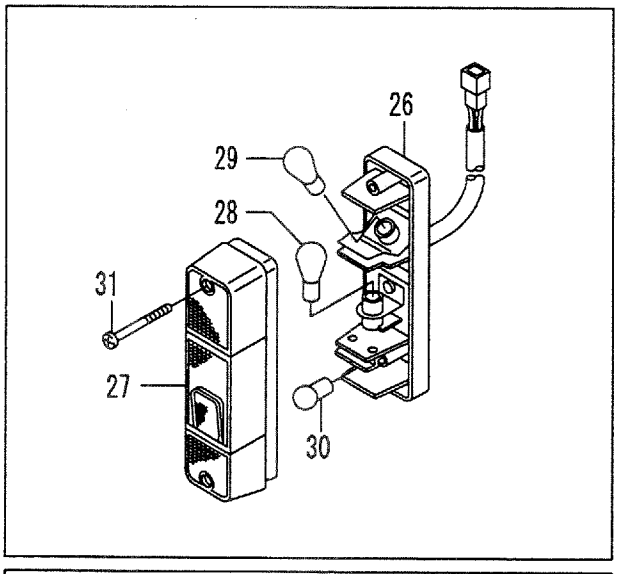

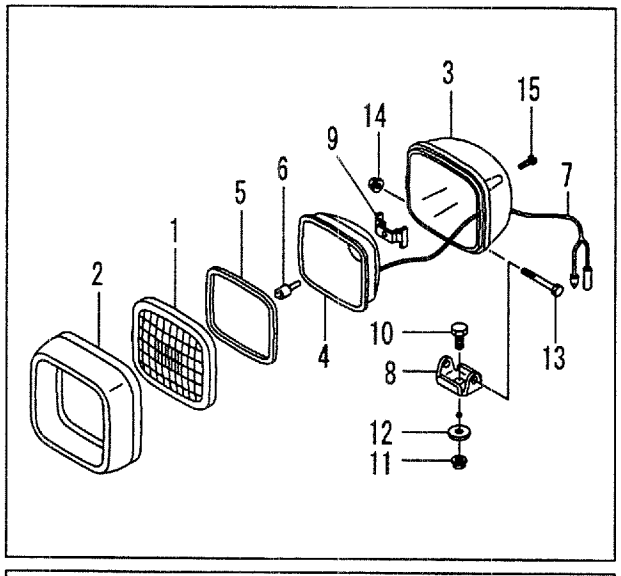

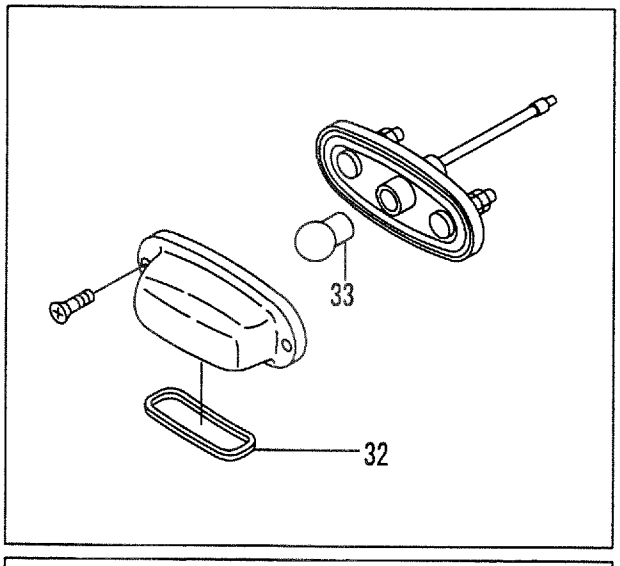

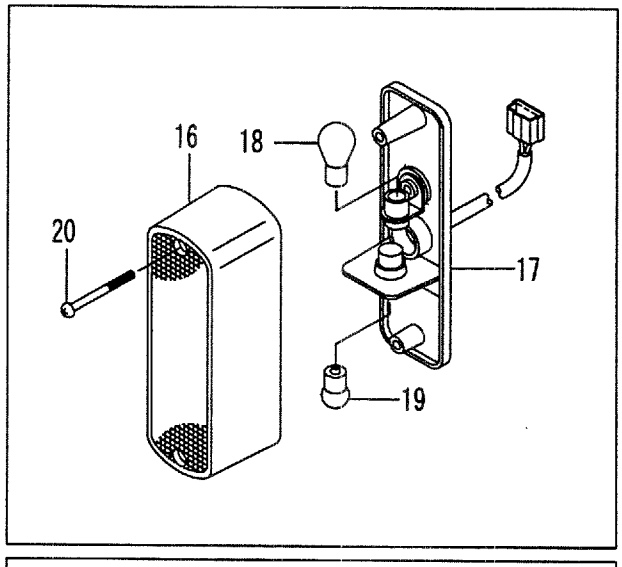

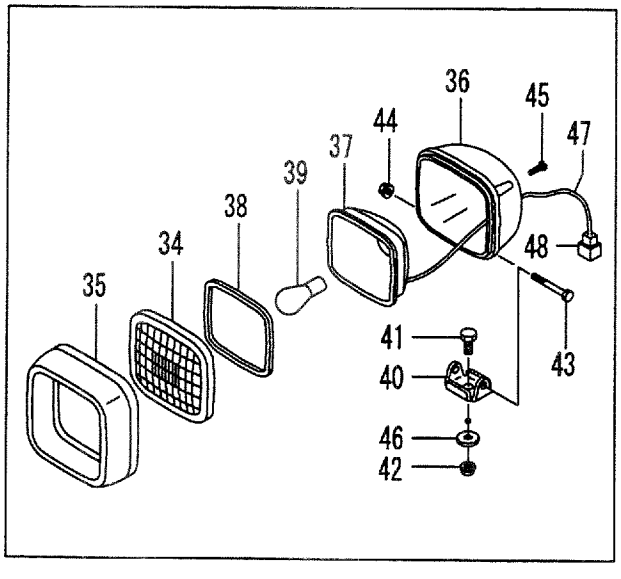

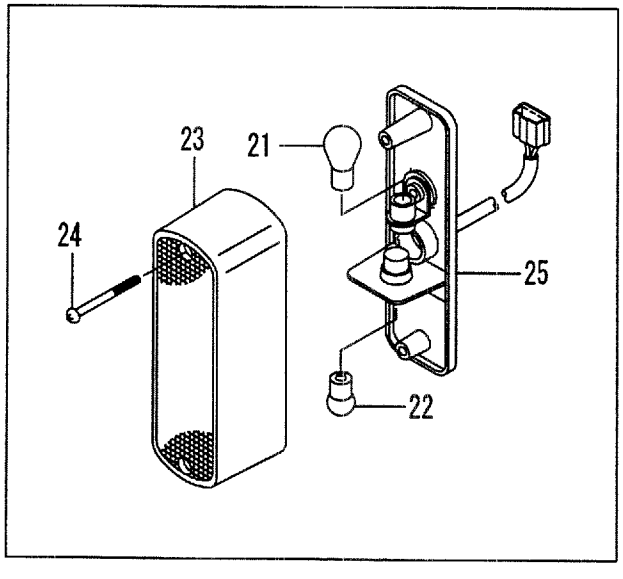

A:FD35C8 D:FD40T8 G:FD50T8 K:FG45T8
B:FD35T8 E:FD45C8 H:FG35T8 L:FG50T8
C:FD40C8 F:FD45T8 J:FG40T8

FIG.22
(F4042460)

Item No	Part No.	Mark	Description		Req'd	Remarks : Serial No.
A1	235C2-42101		LAMP-ASSY,HEAD	ﾍｯﾄﾞﾗﾝﾌﾟｱｯｾﾝ	2	A,B,C,D,E
						INC.1-15
-	216G2-40602		LAMP-ASSY,HEAD	ﾍｯﾄﾞﾗﾝﾌﾟｱｯｾﾝ	2	H,J
						INC.1-11,13-15
1	235C2-42131		LENS	ﾚﾝｽﾞ	2	A,B,C,D,E,H,J
2	235C2-42141		RIM	ﾘﾑ	2	A,B,C,D,E,H,J
3	216G2-43511		HOUSING	ﾊｳｼﾞﾝｸﾞ	2	A,B,C,D,E,H,J
4	216G2-43521		REFLECTOR	ﾘﾌﾚｸﾀ	2	A,B,C,D,E,H,J
5	216G2-43531		GASKET	ｶﾞｽｹｯﾄ	2	A,B,C,D,E,H,J
6	235C2-42111		BULB,24V/55W	ﾊﾞﾙﾌﾞ	2	A,B,C,D,E
-	216G2-43542		BULB,12V/55W	ﾊﾞﾙﾌﾞ	2	H,J
7	NO PART NO.	#	WIRE,LEAD	ﾜｲﾔ	2	A,B,C,D,E
-	216G2-43551		WIRE,LEAD	ﾜｲﾔ	2	H,J
8	216G2-43562		BRACKET	ﾌﾞﾗｹｯﾄ	2	A,B,C,D,E,H,J
9	216G2-43571		SPRING	ｽﾌﾟﾘﾝｸﾞ	2	A,B,C,D,E,H,J
10	01100-08020		BOLT	ﾎﾞﾙﾄ	2	A,B,C,D,E,H,J
11	01400-00008		NUT	ﾅｯﾄ	2	A,B,C,D,E
-	216G2-43592		NUT	ﾅｯﾄ	2	H,J
12	02010-00008		WASHER	ﾜｯｼｬ	2	A,B,C,D,E
13	01100-06050		BOLT	ﾎﾞﾙﾄ	2	A,B,C,D,E,H,J
14	216G2-43611		NUT	ﾅｯﾄ	2	A,B,C,D,E,H,J
15	01030-04018		SCREW	ｽｸﾘｭ	8	A,B,C,D,E,H,J
A2	230C2-40351		LAMP-ASSY,COMBINATION,F		2	A,B,C,D,E,F,G
				ｺﾝﾋﾞﾈｰｼｮﾝﾗﾝﾌﾟｱｯｾﾝ		INC.16-20
16	216G2-40731		LENS	ﾚﾝｽﾞ	2	A,B,C,D,E,F,G
17	NO PART NO.	#	BODY	ﾎﾞﾃﾞｨ	2	A,B,C,D,E,F,G
18	25812-42151		BULB,24V/25W	ﾊﾞﾙﾌﾞ	2	A,B,C,D,E,F,G
19	25812-42161		BULB,24V/5W	ﾊﾞﾙﾌﾞ	2	A,B,C,D,E,F,G
20	NO PART NO.		SCREW	ｽｸﾘｭ	4	A,B,C,D,E,F,G
A3	216G2-40701		LAMP-ASSY,COMBINATION,F		2	H,J,K,L
				ｺﾝﾋﾞﾈｰｼｮﾝﾗﾝﾌﾟｱｯｾﾝ		INC.21-25
21	216G2-40711		BULB	ﾊﾞﾙﾌﾞ	2	H,J,K,L
22	216G2-40721		BULB,12V/10W	ﾊﾞﾙﾌﾞ	2	H,J,K,L
23	216G2-40731		LENS	ﾚﾝｽﾞ	2	H,J,K,L
24	NO PART NO.	#	SCREW	ｽｸﾘｭ	8	H,J,K,L
25	NO PART NO.	#	BODY	ﾎﾞﾃﾞｨ	2	H,J,K,L
A4	514A7-10212		LAMP-ASSY,COMBINATION,R		2	A,B,C,D,E,F,G
				ｺﾝﾋﾞﾈｰｼｮﾝﾗﾝﾌﾟｱｯｾﾝ		INC.26-31
-	214A2-40202		LAMP-ASSY,COMBINATION,R		2	H,J,K,L
				ｺﾝﾋﾞﾈｰｼｮﾝﾗﾝﾌﾟｱｯｾﾝ		INC.26-31
26	NO PART NO.	#	BODY	ﾎﾞﾃﾞｨ	2	
27	214A2-42161		LENS	ﾚﾝｽﾞ	2	A,B,C,D,E,F,G
-	214A2-42162		LENS	ﾚﾝｽﾞ	2	H,J,K,L
28	24352-42451		BULB,24V/10W	ﾊﾞﾙﾌﾞ	2	A,B,C,D,E,F,G
-	23659-32011		BULB,12V/23,8W	ﾊﾞﾙﾌﾞ	2	H,J,K,L
29	24352-42441		BULB,24V/25W	ﾊﾞﾙﾌﾞ	2	A,B,C,D,E,F,G
-	22252-42001		BULB,12V/23W	ﾊﾞﾙﾌﾞ	2	H,J,K,L
30	53657-12111		BULB,24V/12W	ﾊﾞﾙﾌﾞ	2	A,B,C,D,E,F,G
-	23659-32021		BULB,12V/10W	ﾊﾞﾙﾌﾞ	2	H,J,K,L
31	01030-05065		SCREW	ｽｸﾘｭ	2	

FIG.22 LIGHT UNIT

(F4042460) ライトユニット

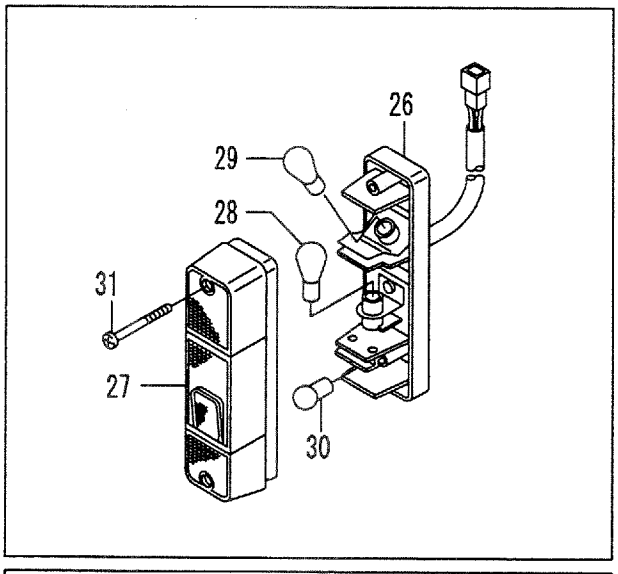

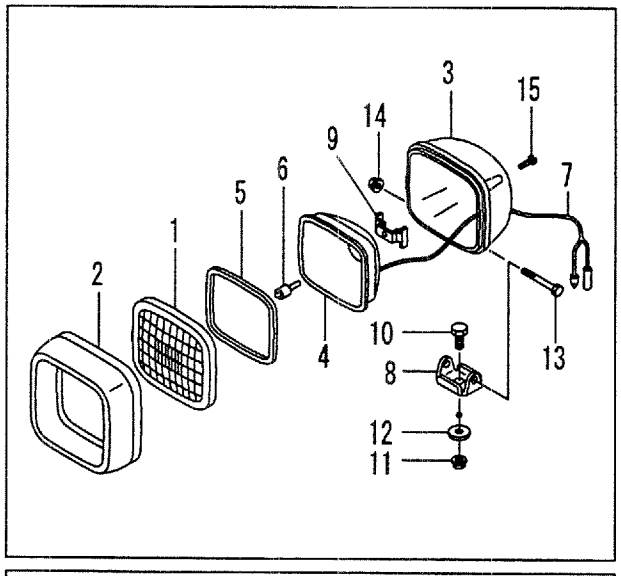

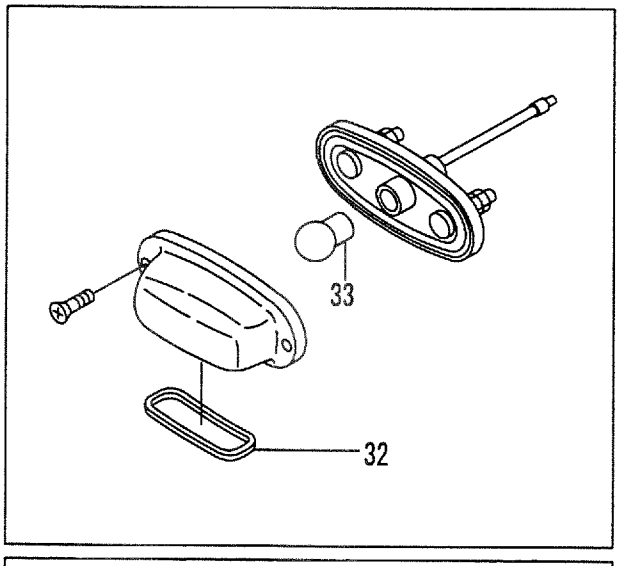

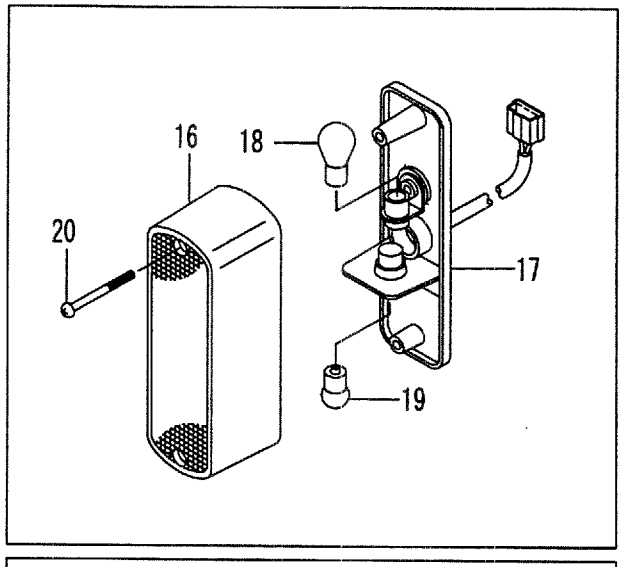

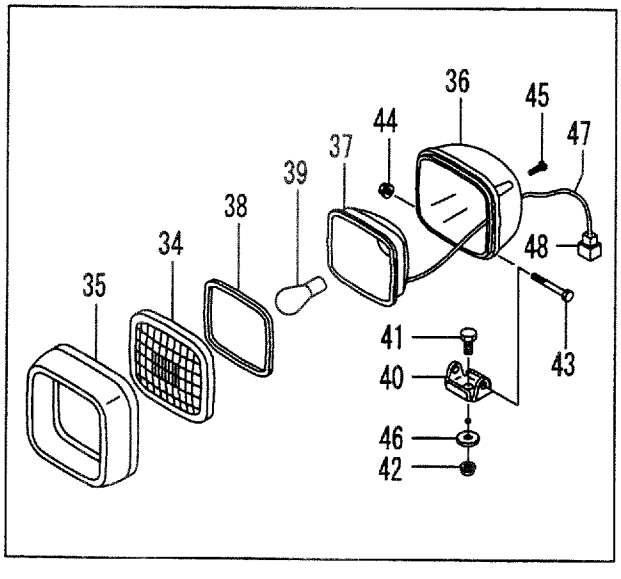

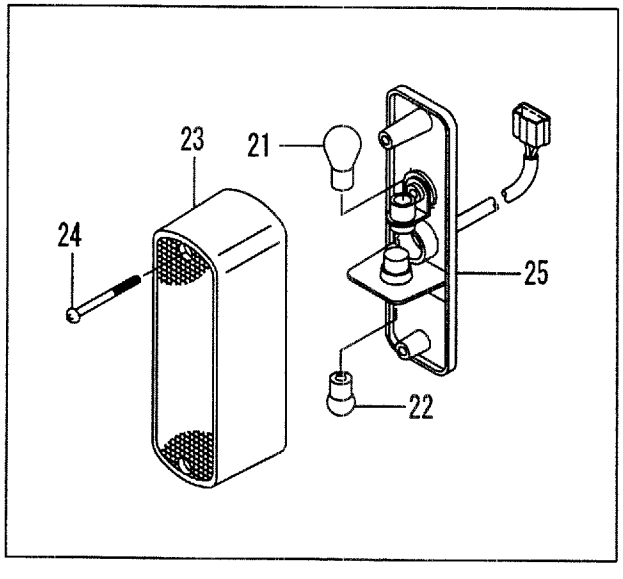

A:FD35C8 D:FD40T8 G:FD50T8 K:FG45T8
B:FD35T8 E:FD45C8 H:FG35T8 L:FG50T8
C:FD40C8 F:FD45T8 J:FG40T8

FIG.22
(F4042460)

Item No	Part No.	Mark	Description		Req'd	Remarks : Serial No.
A5	20959-30302		LAMP-ASSY,LICENCE	ﾗｲｾﾝｽﾗﾝﾌﾟｱｯｾﾝ	1	A,B,C,D,E,F,G
						INC.32,33
-	22132-40202		LAMP-ASSY,LICENCE	ﾗｲｾﾝｽﾗﾝﾌﾟｱｯｾﾝ	1	H,J,K,L
						INC.32,33
32	22192-42411		LENS	ﾚﾝｽﾞ	1	
33	3906199		BULB	ﾊﾞﾙﾌﾞ	1	A,B,C,D,E,F,G
-	22132-40041		BULB,12V/10W	ﾊﾞﾙﾌﾞ	1	H,J,K,L
A6	235H2-42101		LAMP-ASSY,HEAD	ﾍｯﾄﾞﾗﾝﾌﾟｱｯｾﾝ	2	F,G
						INC.34-48
-	235N2-42101		LAMP-ASSY,HEAD	ﾍｯﾄﾞﾗﾝﾌﾟｱｯｾﾝ	2	K,L
						INC.34-48
34	271A2-42401		LENS	ﾚﾝｽﾞ	2	F,G,K,L
35	27412-42301		RIM	ﾘﾑ	2	F,G,K,L
36	235H2-42121		HOUSING	ﾊｳｼﾞﾝｸﾞ	2	F,G,K,L
37	25812-42011		REFLECTOR	ﾘﾌﾚｸﾀ	2	F,G,K,L
38	27412-42331		GASKET	ｶﾞｽｹｯﾄ	2	F,G,K,L
39	235H2-42111		BULB,24V/62W	ﾊﾞﾙﾌﾞ	2	F,G
-	235N2-42111		BULB,12V/45W	ﾊﾞﾙﾌﾞ	2	K,L
40	216G2-43561		BRACKET	ﾌﾞﾗｹｯﾄ	2	F,G,K,L
41	216G2-43581		BOLT	ﾎﾞﾙﾄ	2	F,G,K,L
42	216G2-43591		NUT	ﾅｯﾄ	2	F,G,K,L
43	216G2-43601		BOLT	ﾎﾞﾙﾄ	2	F,G,K,L
44	235H2-42131		NUT	ﾅｯﾄ	2	F,G,K,L
45	01030-04020		SCREW	ｽｸﾘｭ	8	F,G,K,L
46	235H2-42141		WASHER	ﾜｯｼｬ	2	F,G,K,L
47	235H2-42151		LEAD	ﾘｰﾄﾞ	2	F,G,K,L
48	235H2-42161		CONNECTOR	ｺﾈｸﾀ	2	F,G,K,L
49	530C9-92001	+	BRACKET	ﾌﾞﾗｹｯﾄ	1	[RRL]
-	535C9-92001	+	BRACKET	ﾌﾞﾗｹｯﾄ	1	[RRL/TUE]
50	531A0-52521	+	BRACKET	ﾌﾞﾗｹｯﾄ	1	[SCB][RRE]
51	25596-42361	+	RIVET	ﾘﾍﾞｯﾄ	4	

FIG.23 CONTROL UNIT

(F4042470) コントロールユニット

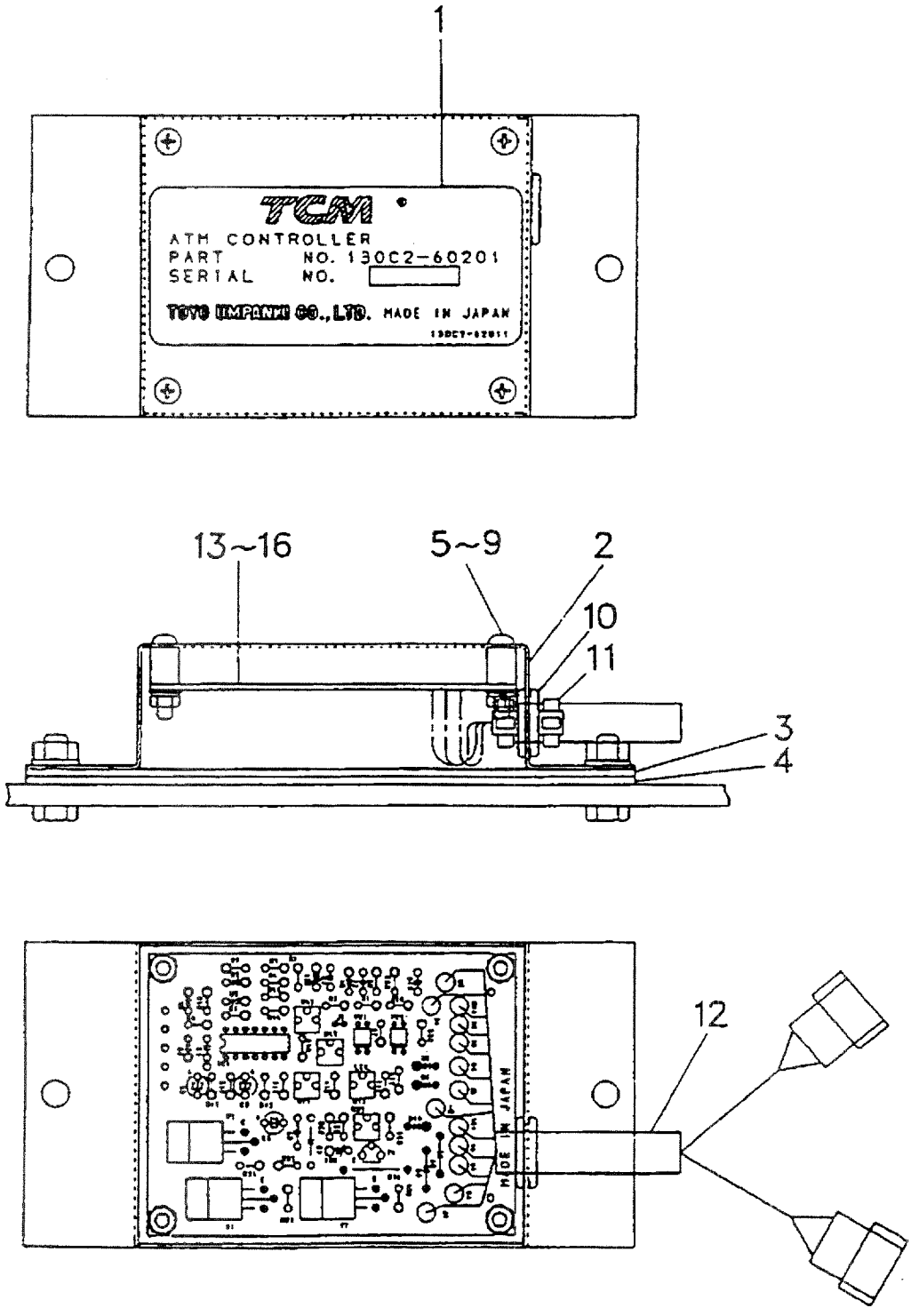

A:FD35C8 D:FD40T8 G:FD50T8 K:FG45T8
B:FD35T8 E:FD45C8 H:FG35T8 L:FG50T8
C:FD40C8 F:FD45T8 J:FG40T8

FIG.23
(F4042470)

Item No	Part No.	Mark	Description		Req'd	Remarks : Serial No.
A1	135H2-60201		UNIT-ASSY,CONTROL	ｺﾝﾄﾛｰﾙﾕﾆｯﾄｱｯｾﾝ	1	F,G INC.1-16
-	135N2-60201		UNIT-ASSY,CONTROL	ｺﾝﾄﾛｰﾙﾕﾆｯﾄｱｯｾﾝ	1	K,L INC.1-16
1	135H2-62011		PLATE,NAME	ﾌﾟﾚｰﾄ	1	F,G
-	135N2-62011		PLATE,NAME	ﾌﾟﾚｰﾄ	1	K,L
2	55792-52601		CASE	ｹｰｽ	1	F,G,K,L
3	55792-52611		SEAT	ｼｰﾄ	1	F,G,K,L
4	55792-52621		PLATE	ﾌﾟﾚｰﾄ	1	F,G,K,L
5	27042-64311		SPACER	ｽﾍﾟｰｻ	4	F,G,K,L
6	01030-04020		SCREW	ｽｸﾘｭ	4	F,G,K,L
7	01400-00004		NUT	ﾅｯﾄ	4	F,G,K,L
8	02010-00004		WASHER	ﾜｯｼｬ	4	F,G,K,L
9	02000-00004		WASHER	ﾜｯｼｬ	4	F,G,K,L
10	205A2-63311		GROMMET	ｸﾞﾛﾒｯﾄ	1	F,G,K,L
11	27042-42312		BAND	ﾊﾞﾝﾄﾞ	2	F,G,K,L
12	55792-52641		WIRE-HARNESS	ﾜｲﾔﾊｰﾈｽ	1	F,G,K,L
13	130C2-60301		BOARD,PRINTED	ﾎﾞｰﾄﾞ	1	F,G
-	135N2-60301		BOARD,PRINTED	ﾎﾞｰﾄﾞ	1	K,L
14	01100-06020		BOLT	ﾎﾞﾙﾄ	2	F,G,K,L
15	02010-00006		WASHER	ﾜｯｼｬ	2	F,G,K,L
16	01400-00006		NUT	ﾅｯﾄ	2	F,G,K,L
17	230C2-42161	+	WIRE-HARNESS,A	ﾜｲﾔﾊｰﾈｽ	1	F,G,K,L
18	27912-40301	+	SWITCH	ｽｲｯﾁ	1	F,G,K,L

FIG.24 SPEED METER (C-TYPE)[SM][SM/DEF]

(F4042480) ｽﾋﾟｰﾄﾞﾒｰﾀ

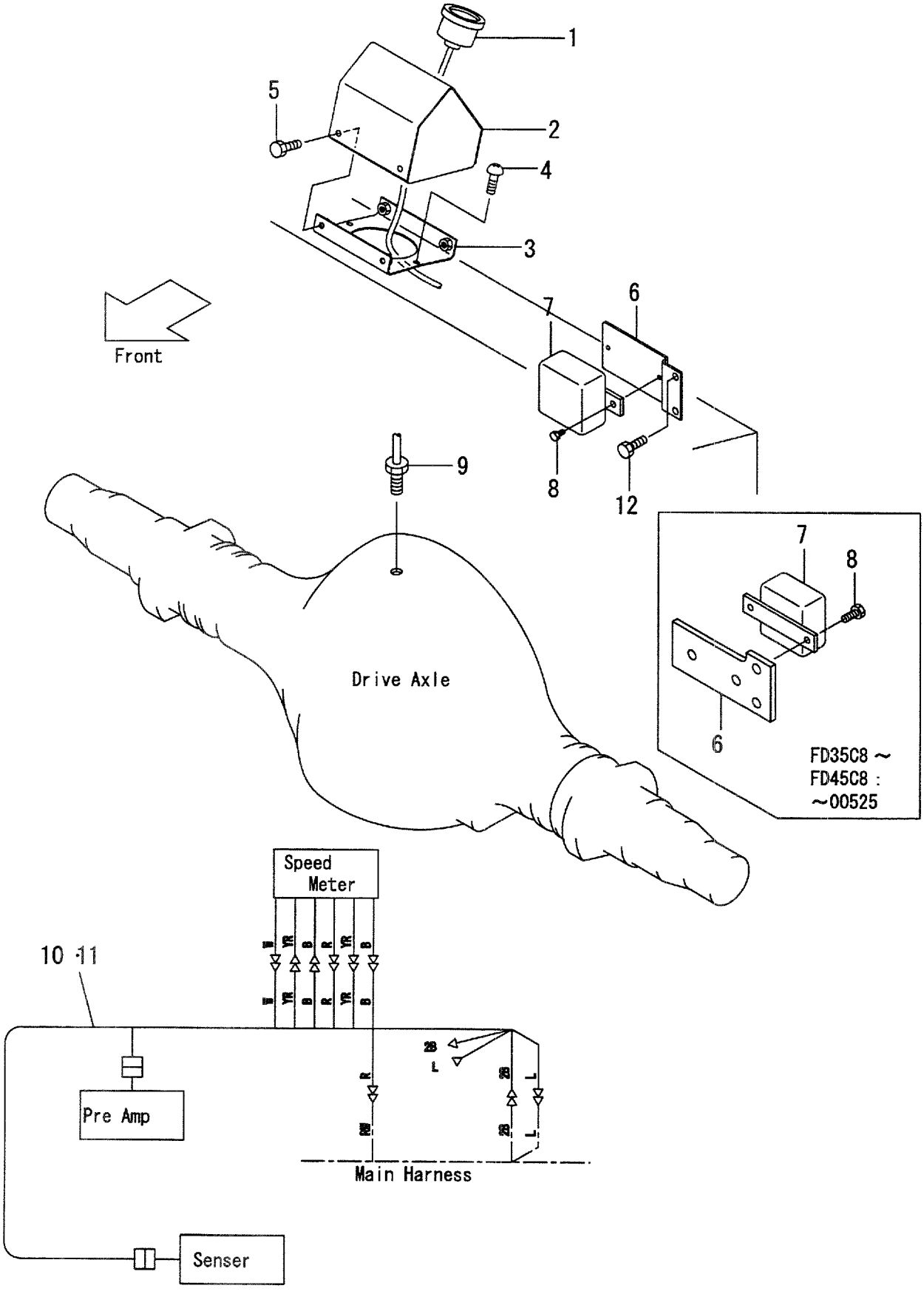

A:FD35C8 D:FD40T8 G:FD50T8 K:FG45T8
B:FD35T8 E:FD45C8 H:FG35T8 L:FG50T8
C:FD40C8 F:FD45T8 J:FG40T8

FIG.24
(F4042480)

Item No	Part No.	Mark	Description		Req'd	Remarks : Serial No.
1	54357-52001		METER,SPEED	ﾒｰﾀ	1	A,C,E [SM][SM/DEF]
2	516G7-50401		BOX	ﾎﾞｯｸｽ	1	A,C,E [SM][SM/DEF]
-	534A5-32561		BOX	ﾎﾞｯｸｽ	1	A,C,E [SM/DEF]
3	516G1-42021		BRACKET	ﾌﾞﾗｹｯﾄ	1	A,C,E [SM][SM/DEF]
4	214A6-42771		SCREW	ｽｸﾘｭ	2	A,C,E [SM][SM/DEF]
5	216G5-42261		BOLT	ﾎﾞﾙﾄ	4	A,C,E [SM][SM/DEF]
6	524W7-52001		BRACKET	ﾌﾞﾗｹｯﾄ	1	A,C,E:1-525 [SM][SM/DEF]
-	535C6-22101		BRACKET	ﾌﾞﾗｹｯﾄ	1	A,C,E:526- [SM][SM/DEF]
7	54357-52011		PREAMP	ﾌﾟﾘｱﾝﾌﾟ	1	A,C,E [SM][SM/DEF]
8	01185-06012		BOLT	ﾎﾞﾙﾄ	2	A,C,E [SM][SM/DEF]
9	54357-52021		SENSOR	ｾﾝｻ	1	A,C,E [SM][SM/DEF]
10	524W7-52021		WIRE-HARNESS	ﾜｲﾔﾊｰﾈｽ	1	A,C,E [SM][SM/DEF]
11	04913-10200		BAND	ﾊﾞﾝﾄﾞ	1	A,C,E [SM][SM/DEF]
12	01186-10030		BOLT & WASHER	ﾎﾞﾙﾄ&ﾜｯｼｬ	2	A,C,E:526- [SM][SM/DEF]
13	535C7-52111	+	WIRE-HARNESS	ﾜｲﾔﾊｰﾈｽ	1	A,C,E [SM/DEF]

FIG.25 SPEED METER (T-TYPE)[SM][SM/RRL][SM/DEF]

(F4042490) ｽﾋﾟｰﾄﾞﾒｰﾀ

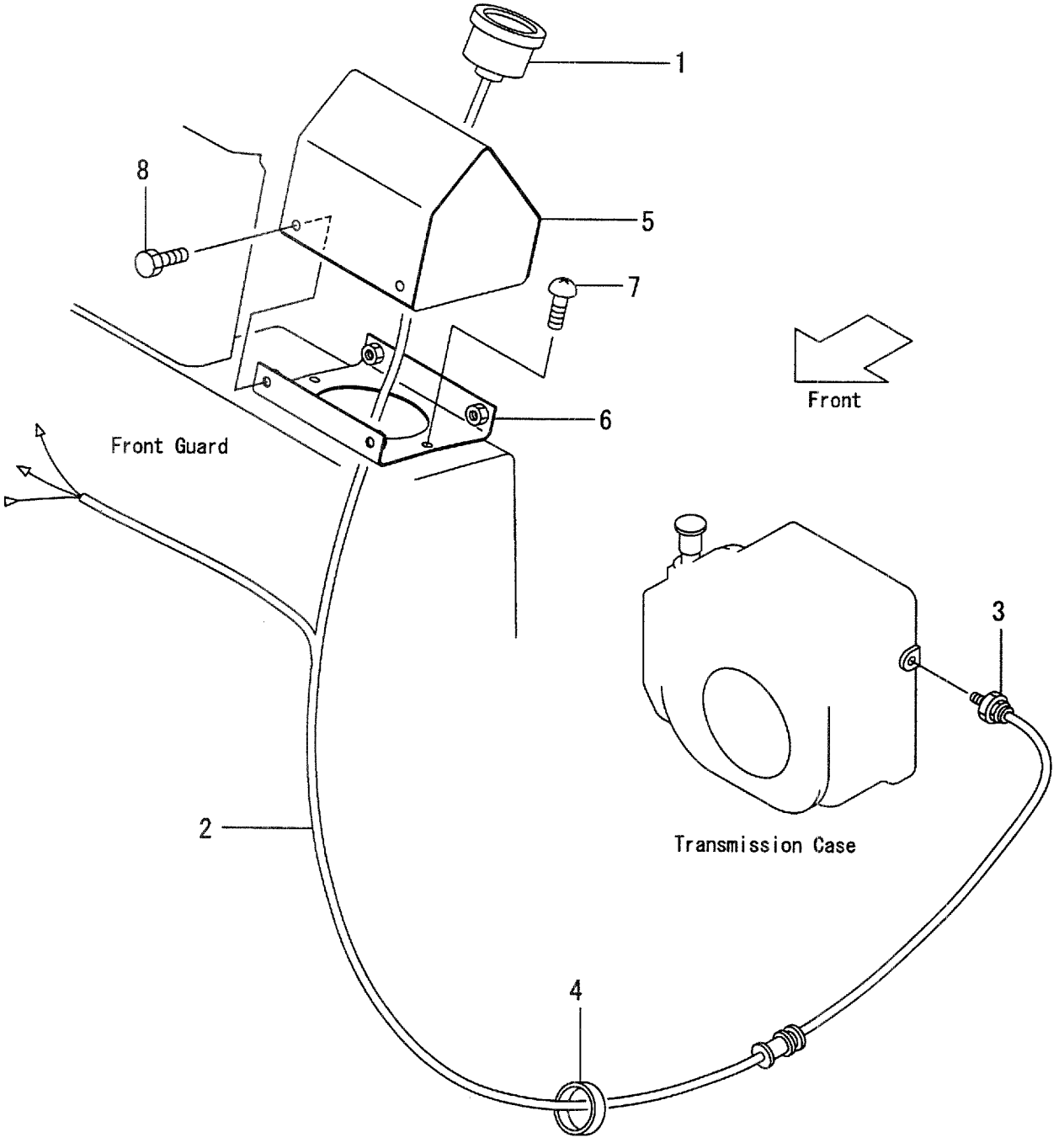

A:FD35C8 D:FD40T8 G:FD50T8 K:FG45T8
B:FD35T8 E:FD45C8 H:FG35T8 L:FG50T8
C:FD40C8 F:FD45T8 J:FG40T8

FIG.25
(F4042490)

Item No	Part No.	Mark	Description	Req'd	Remarks : Serial No.
1	228E2-42111		METER,SPEED,24V メータ	1	B,D [SM][SM/DEF]
-	228E2-42111		METER,SPEED,24V メータ	1	F,G [SM][SM/RRL][SM/DEF]
-	523W7-52001		METER,SPEED,12V メータ	1	H,J [SM][SM/DEF]
-	523W7-52001		METER,SPEED,12V メータ	1	K,L [SM][SM/RRL][SM/DEF]
2	514T7-52101		WIRE-HARNESS,SPEED-METER ワイヤハーネス	1	B,D,H,J [SM][SM/DEF]
-	530C7-52001		WIRE-HARNESS,SPEED-METER ワイヤハーネス	1	F,G,K,L [SM][SM/RRL][SM/DEF]
3	271A2-62051		SENSOR センサ	1	B,D,F:1-892 G:1-305 H,J,K:1-204 L:1-107 [SM][SM/DEF]
-	16402-54331		SENSOR センサ	1	B,D,F:893- G:306- H,J,K:205- L:108- [SM][SM/DEF]
4	04913-10200		BAND ﾊﾞﾝﾄﾞ	1	B,D,H,J [SM][SM/DEF]
5	516G7-50401		BOX ﾎﾞｯｸｽ	1	B,D,H,J [SM]
-	516G7-50401		BOX ﾎﾞｯｸｽ	1	F,G,K,L [SM][SM/RRL]
-	534A5-32561		BOX ﾎﾞｯｸｽ	1	B,D,F,G,H,J,K,L [SM/DEF]
6	516G1-42021		BRACKET ﾌﾞﾗｹｯﾄ	1	B,D,H,J [SM]
-	516G1-42021		BRACKET ﾌﾞﾗｹｯﾄ	1	F,G,K,L [SM][SM/RRL]
7	214A6-42771		SCREW ｽｸﾘｭ	2	B,D,H,J [SM]
-	214A6-42771		SCREW ｽｸﾘｭ	2	F,G,K,L [SM][SM/RRL]
8	216G5-42261		BOLT ﾎﾞﾙﾄ	4	B,D,H,J [SM]
-	216G5-42261		BOLT ﾎﾞﾙﾄ	4	F,G,K,L [SM][SM/RRL]
9	535C7-52111	+	WIRE-HARNESS ﾜｲﾔﾊｰﾈｽ	1	B,D,H,J [SM/DEF]
10	535C7-52101	+	WIRE-HARNESS ﾜｲﾔﾊｰﾈｽ	1	F,G,K,L [SM/DEF]

FIG.26 OK-MONITOR WIRING [OKM][OKM/TTM]

(F40424A0) OKモニタワイヤリング

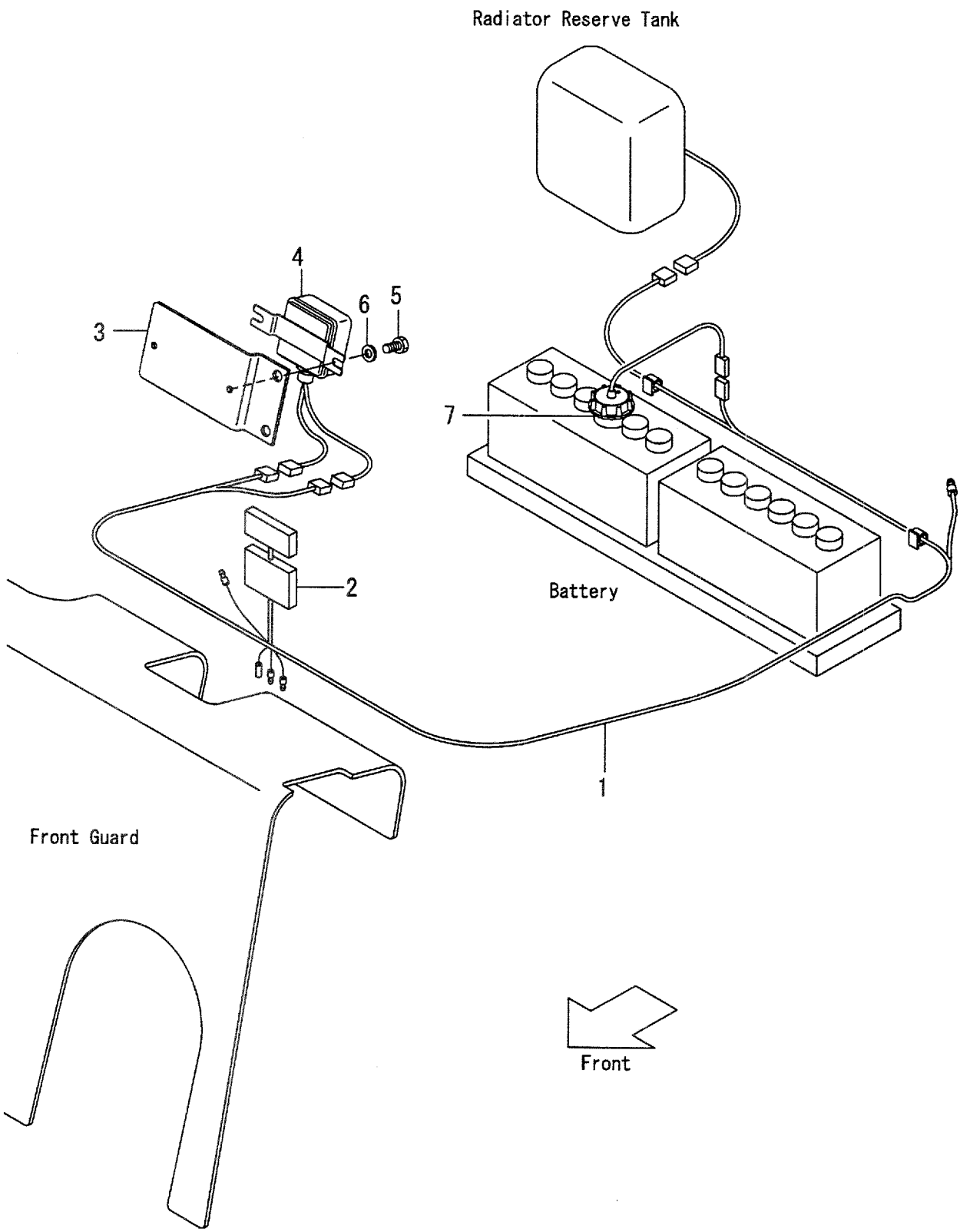

A:FD35C8 D:FD40T8 G:FD50T8 K:FG45T8
B:FD35T8 E:FD45C8 H:FG35T8 L:FG50T8
C:FD40C8 F:FD45T8 J:FG40T8

FIG.26
(F40424A0)

Item No	Part No.	Mark	Description		Req'd	Remarks : Serial No.
1	535C6-22051		WIRE-HARNESS	ﾜｲﾔﾊｰﾈｽ	1	A,C,E [OKM]
-	535C6-22051		WIRE-HARNESS	ﾜｲﾔﾊｰﾈｽ	1	B,D,F,G,H,J,K,L [OKM][OKM/TTM]
2	516G6-22011		WIRE,LEAD	ﾜｲﾔ	1	A,C,E [OKM]
-	516G6-22011		WIRE,LEAD	ﾜｲﾔ	1	B,D,F,G,H,J,K,L [OKM][OKM/TTM]
3	535C6-22101		BRACKET	ﾌﾞﾗｹｯﾄ	1	A,C,E [OKM]
-	535C6-22101		BRACKET	ﾌﾞﾗｹｯﾄ	1	B,D,F,G,H,J,K,L [OKM][OKM/TTM]
4	524W7-12301		MODULE,WARNING	ﾓｼﾞｭｰﾙ	1	A,B,C,D,E,F,G [OKM]
-	524W7-12301		MODULE,WARNING	ﾓｼﾞｭｰﾙ	1	B,D,F,G [OKM/TTM]
-	229F2-42161		MODULE,WARNING	ﾓｼﾞｭｰﾙ	1	H,J,K,L [OKM][OKM/TTM]
5	01183-06012		BOLT	ﾎﾞﾙﾄ	2	A,C,E [OKM]
-	01183-06012		BOLT	ﾎﾞﾙﾄ	2	B,D,F,G,H,J,K,L [OKM][OKM/TTM]
6	02000-00006		WASHER	ﾜｯｼｬ	2	A,C,E [OKM]
-	02000-00006		WASHER	ﾜｯｼｬ	2	B,D,F,G,H,J,K,L [OKM][OKM/TTM]
7	522A2-42001		CAP,BATTERY	ｷｬｯﾌﾟ	1	A,C,E [OKM]
-	522A2-42001		CAP,BATTERY	ｷｬｯﾌﾟ	1	B,D,F,G,H,J,K,L [OKM][OKM/TTM]

FIG.27 HEAD LIGHT [RWLR][RWLL][RWL2]

(F40424B0) ﾍｯﾄﾞﾗｲﾄ

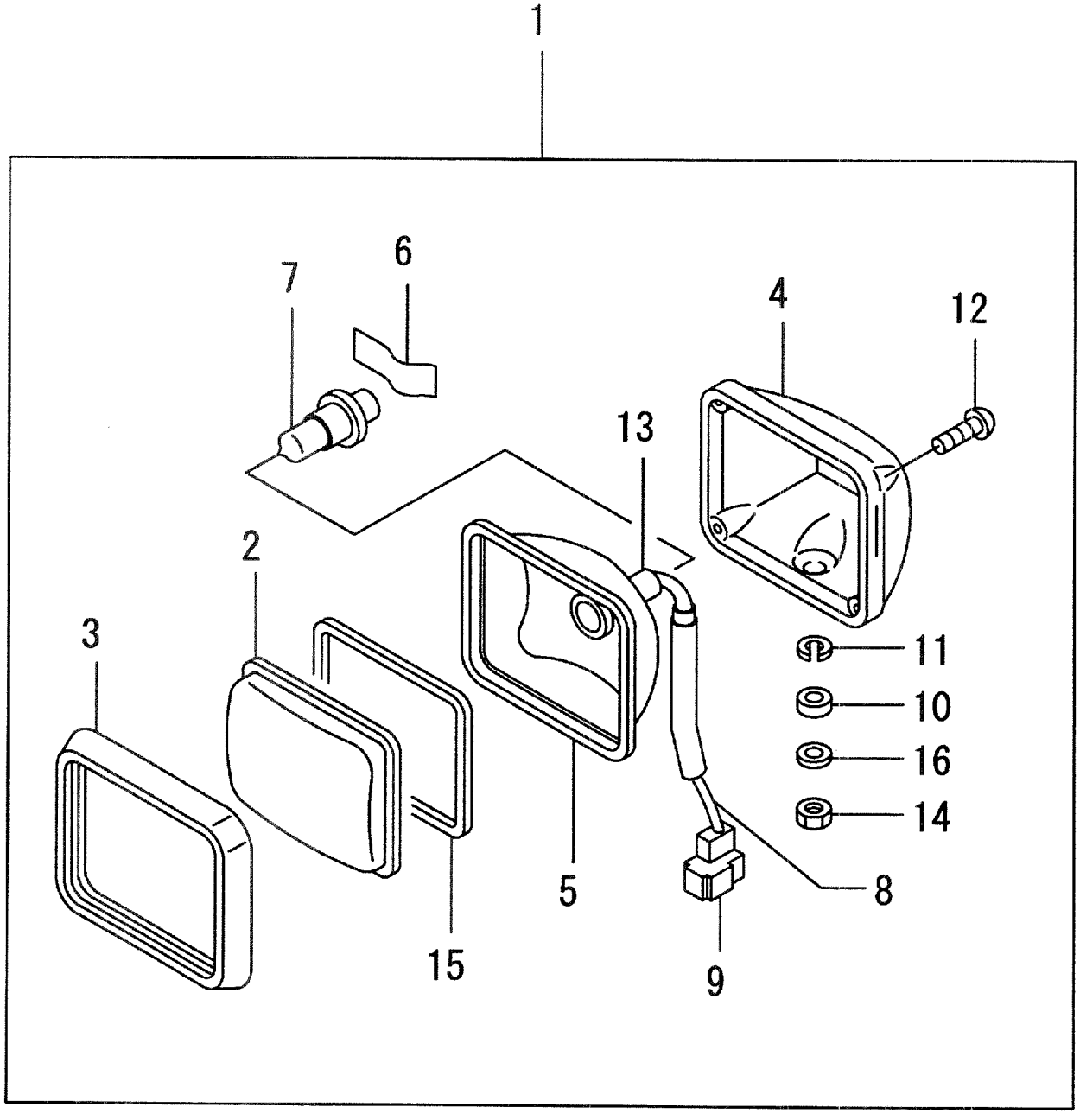

A:FD35C8 D:FD40T8 G:FD50T8 K:FG45T8
B:FD35T8 E:FD45C8 H:FG35T8 L:FG50T8
C:FD40C8 F:FD45T8 J:FG40T8

FIG.27
(F40424B0)

Item No	Part No.	Mark	Description		Req'd	Remarks : Serial No.
1	514A7-10201		LAMP,HEAD	ﾗﾝﾌﾟ	2	A,B,C,D,E,F,G [RWLR][RWLL][RWL2]
-	214A2-40501		LAMP,HEAD	ﾗﾝﾌﾟ	2	H,J,K,L [RWLR][RWLL][RWL2]
2	521A2-42111		LENS,GLASS	ﾚﾝｽﾞ	2	[RWLR][RWLL][RWL2]
3	27412-42301		RIM	ﾘﾑ	2	[RWLR][RWLL][RWL2]
4	NO PART NO.	#	HOUSING	ﾊｳｼﾞﾝｸﾞ	2	[RWLR][RWLL][RWL2]
5	521A2-42121		REFLECTOR	ﾘﾌﾚｸﾀ	2	[RWLR][RWLL][RWL2]
6	521A2-42131		SPRING	ｽﾌﾟﾘﾝｸﾞ	2	[RWLR][RWLL][RWL2]
7	514A7-12101		BULB,24V/70W	ﾊﾞﾙﾌﾞ	2	A,B,C,D,E,F,G [RWLR][RWLL][RWL2]
-	521A2-42141		BULB,12V/55W	ﾊﾞﾙﾌﾞ	2	H,J,K,L [RWLR][RWLL][RWL2]
8	NO PART NO.	#	WIRE,LEAD	ﾜｲﾔ	2	[RWLR][RWLL][RWL2]
9	NO PART NO.	#	CONNECTOR	ｺﾈｸﾀ	2	[RWLR][RWLL][RWL2]
10	NO PART NO.	#	COLLAR	ｶﾗｰ	2	[RWLR][RWLL][RWL2]
11	27412-42371		WASHER	ﾜｯｼｬ	2	[RWLR][RWLL][RWL2]
12	01030-04020		SCREW	ｽｸﾘｭ	8	[RWLR][RWLL][RWL2]
13	521A2-42181		TUBE	ﾁｭｰﾌﾞ	2	[RWLR][RWLL][RWL2]
14	214A2-42311		NUT	ﾅｯﾄ	2	[RWLR][RWLL][RWL2]
15	27412-42331		GASKET	ｶﾞｽｹｯﾄ	2	[RWLR][RWLL][RWL2]
16	NO PART NO.	#	PLATE	ﾌﾟﾚｰﾄ	2	[RWLR][RWLL][RWL2]

FIG.28 ROAD REGULATION [RRL][RRL/TUE]

(F40424C0) ﾛｰﾄﾞﾚｷﾞｭﾚｰｼｮﾝ

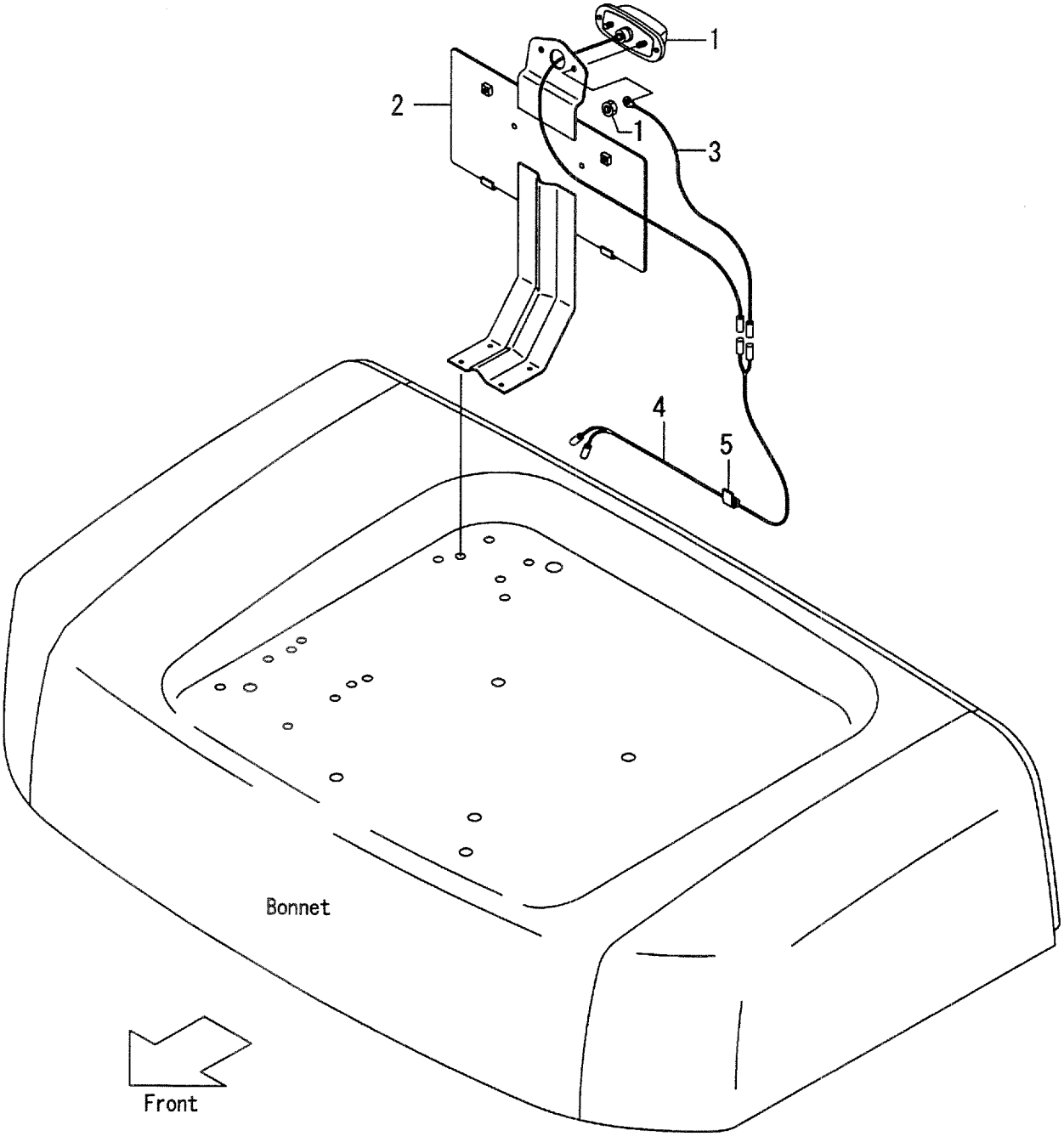

A:FD35C8 D:FD40T8 G:FD50T8 K:FG45T8
B:FD35T8 E:FD45C8 H:FG35T8 L:FG50T8
C:FD40C8 F:FD45T8 J:FG40T8

FIG.28
(F40424C0)

Item No	Part No.	Mark	Description		Req'd	Remarks : Serial No.
1	20959-30302		LAMP,LICENCE	ﾗﾝﾌﾟ	1	A,B,C,D,E,F,G [RRL][RRL/TUE]SEE FIG.22
-	22132-40202		LAMP,LICENCE	ﾗﾝﾌﾟ	1	H,J,K,L [RRL][RRL/TUE]SEE FIG.22
2	530C9-92001		BRACKET	ﾌﾞﾗｹｯﾄ	1	[RRL]
-	535C9-92001		BRACKET	ﾌﾞﾗｹｯﾄ	1	[RRL/TUE]
3	222A2-42511		WIRE,LEAD	ﾜｲﾔ	1	[RRL][RRL/TUE]
4	516G9-92101		WIRE-HARNESS	ﾜｲﾔﾊｰﾈｽ	1	[RRL][RRL/TUE]
5	27732-42311		CLAMP	ｸﾗﾝﾌﾟ	6	[RRL][RRL/TUE]
6	524W5-12091	+	GROMMET	ｸﾞﾛﾒｯﾄ	1	[RRL][RRL/TUE]

ROAD EGULATION[HC/RRE]

FIG.29 [RRE/(CRH,RW,CRO,CRC)][RRE/(LPG,LPO)]

(F40424D0) ﾛｰﾄﾞﾚｷﾞｭﾚｰｼｮﾝ

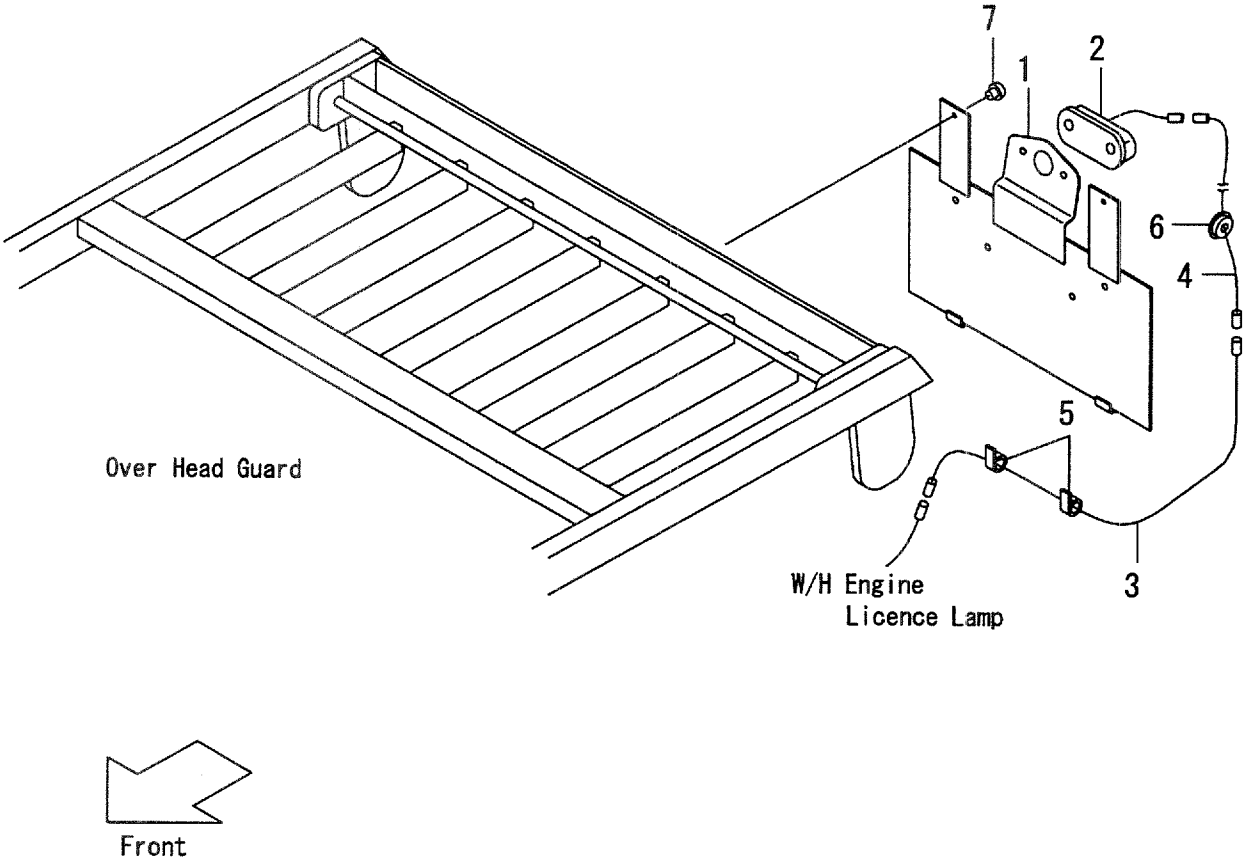

A:FD35C8 D:FD40T8 G:FD50T8 K:FG45T8
B:FD35T8 E:FD45C8 H:FG35T8 L:FG50T8
C:FD40C8 F:FD45T8 J:FG40T8

FIG.29
(F40424D0)

Item No	Part No.	Mark	Description		Req'd	Remarks : Serial No.
1	535C9-92011		BRACKET	ﾌﾞﾗｹｯﾄ	1	[HC/RRE][CRH/RRE][RW/RRE] [CRO/RRE][CRC/RRE]
-	535C9-92011		BRACKET	ﾌﾞﾗｹｯﾄ	1	[LPG/RRE][LPO/RRE]
2	20959-30302		LAMP,LICENCE	ﾗﾝﾌﾟ	1	A,B,C,D,E,F,G [HC/RRE][RRE/CRH] SEE FIG.22
-	20959-30302		LAMP,LICENCE	ﾗﾝﾌﾟ	1	C,D,E,F,G [RRE/RW]SEE FIG.22
-	20959-30302		LAMP,LICENCE	ﾗﾝﾌﾟ	1	A,C,E [RRE/CRO]SEE FIG.22
-	20959-30302		LAMP,LICENCE	ﾗﾝﾌﾟ	1	B,D,F,G [RRE/CRC]SEE FIG.22
-	22132-40202		LAMP,LICENCE	ﾗﾝﾌﾟ	1	H,J,K,L [HC/RRE]SEE FIG.22
-	22132-40202		LAMP,LICENCE	ﾗﾝﾌﾟ	1	H,J,K,L [LPG/RRE][LPO/RRE] SEE FIG.22
-	22132-40202		LAMP,LICENCE	ﾗﾝﾌﾟ	1	J,K,L [RRE/RW]SEE FIG.22
3	534A9-92131		WIRE-HARNESS	ﾜｲﾔﾊｰﾈｽ	1	A,B,C,D,E,F:1-858 G:1-169 H,J,K:1-308 L:1-132 [HC/RRE][CRH/RRE][RW/RRE] [CRO/RRE][CRC/RRE]
-	535C9-92051		WIRE-HARNESS	ﾜｲﾔﾊｰﾈｽ	1	A,B,C,D,E,F:859- G:170- H,J,K:309- L:133- [HC/RRE][CRH/RRE][RW/RRE] [CRO/RRE][CRC/RRE]
-	534A9-92131		WIRE-HARNESS	ﾜｲﾔﾊｰﾈｽ	1	A,B,C,D,E,F:1-858 G:1-169 H,J,K:1-308 L:1-132 [LPG/RRE][LPO/RRE]
-	535C9-92051		WIRE-HARNESS	ﾜｲﾔﾊｰﾈｽ	1	A,B,C,D,E,F:859- G:170- H,J,K:309- L:133- [LPG/RRE][LPO/RRE]
4	222A2-42511		WIRE,LEAD	ﾜｲﾔ	1	[HC/RRE][CRH/RRE][RW/RRE] [CRO/RRE][CRC/RRE]
-	222A2-42511		WIRE,LEAD	ﾜｲﾔ	1	[LPG/RRE][LPO/RRE]
5	27732-42311		CLAMP	ｸﾗﾝﾌﾟ	6	[HC/RRE][CRH/RRE][RW/RRE] [CRO/RRE][CRC/RRE]
-	27732-42311		CLAMP	ｸﾗﾝﾌﾟ	6	[LPG/RRE][LPO/RRE]
6	524W5-12091		GROMMET	ｸﾞﾛﾒｯﾄ	1	[HC/RRE][CRH/RRE][RW/RRE] [CRO/RRE][CRC/RRE]
-	524W5-12091		GROMMET	ｸﾞﾛﾒｯﾄ	1	[LPG/RRE][LPO/RRE]

ROAD EGULATION[HC/RRE]

FIG.29 [RRE/(CRH,RW,CRO,CRC)][RRE/(LPG,LPO)]

(F40424D0) ﾛｰﾄﾞﾚｷﾞｭﾚｰｼｮﾝ

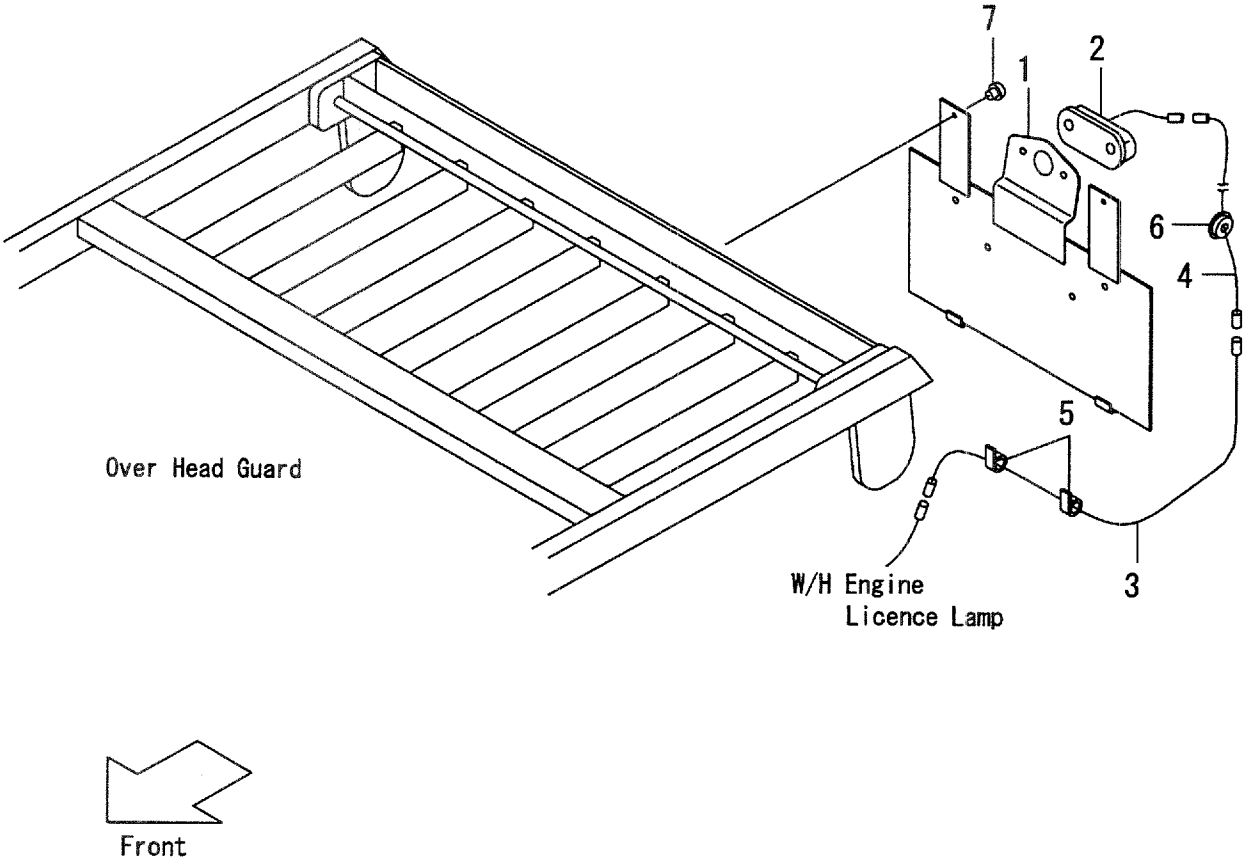

A:FD35C8 D:FD40T8 G:FD50T8 K:FG45T8
B:FD35T8 E:FD45C8 H:FG35T8 L:FG50T8
C:FD40C8 F:FD45T8 J:FG40T8

FIG.29
(F40424D0)

Item No	Part No.	Mark	Description	Req'd	Remarks : Serial No.
7	25302-42251		RIVET リベット	2	[HC/RRE][CRH/RRE][RW/RRE] [CRO/RRE][CRC/RRE]
-	25302-42251		RIVET リベット	2	[LPG/RRE][LPO/RRE]
8	25596-42361	+	RIVET,NYLON リベット	4	[HC/RRE][CRH/RRE][RW/RRE] [CRO/RRE][CRC/RRE]
-	25596-42361	+	RIVET,NYLON リベット	4	[LPG/RRE][LPO/RRE]

FIG.30 ROAD REGULATION [SCB/RRE]

(F40424E0) ﾛｰﾄﾞﾚｷﾞｭﾚｰｼｮﾝ

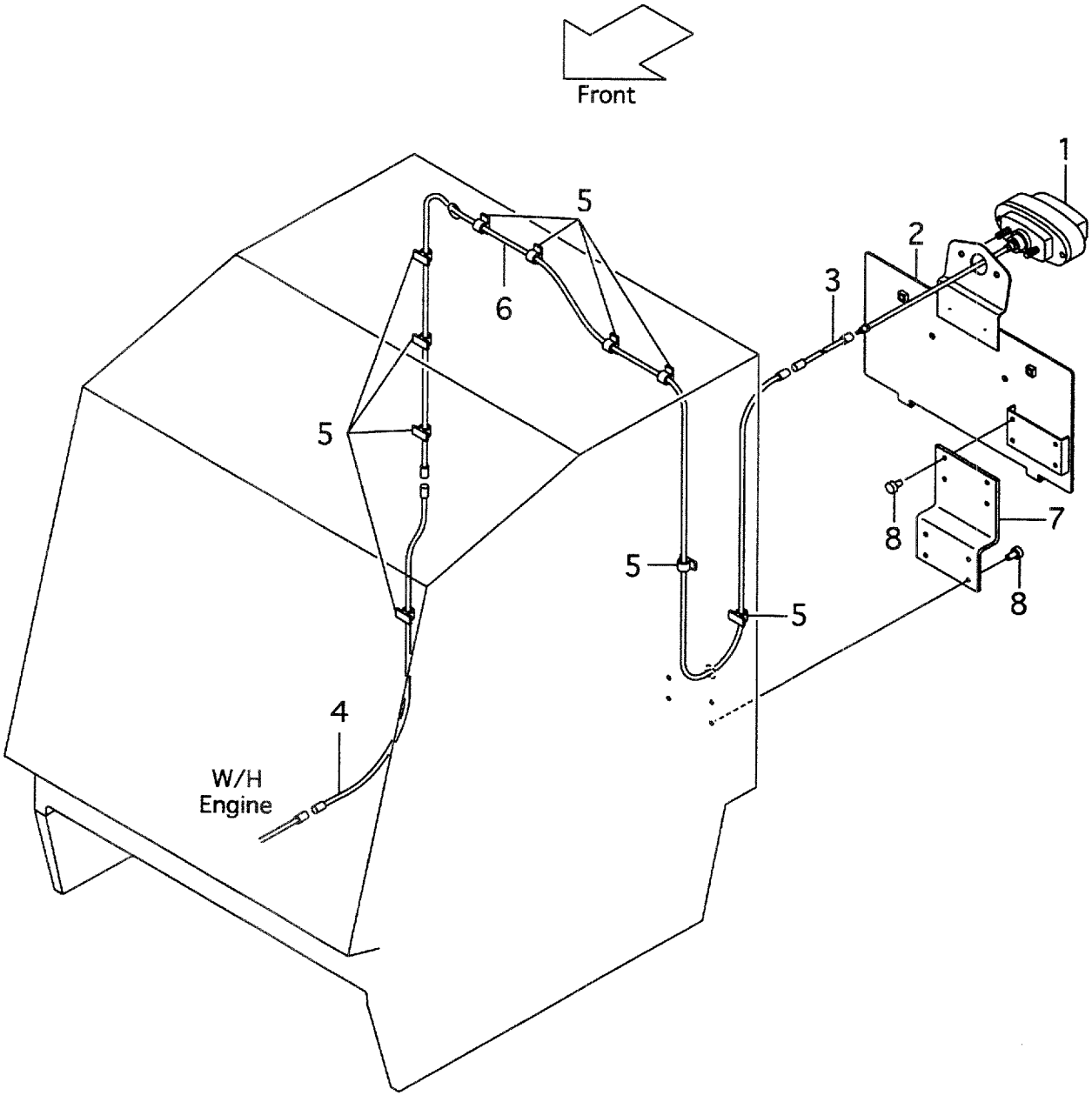

A:FD35C8 D:FD40T8 G:FD50T8 K:FG45T8
B:FD35T8 E:FD45C8 H:FG35T8 L:FG50T8
C:FD40C8 F:FD45T8 J:FG40T8

FIG.30
(F40424E0)

Item No	Part No.	Mark	Description		Req'd	Remarks : Serial No.
1	20959-30302		LAMP,LICENCE	ﾗﾝﾌﾟ	1	A,B,C,D,E,F,G [SCB][RRE]SEE FIG.22
-	22132-40202		LAMP,LICENCE	ﾗﾝﾌﾟ	1	H,J,K,L [SCB][RRE]SEE FIG.22
2	531A0-52521		BRACKET	ﾌﾞﾗｹｯﾄ	1	[SCB][RRE]
3	222A2-42511		WIRE,LEAD	ﾜｲﾔ	1	[SCB][RRE]
4	516G9-92101		WIRE-HARNESS	ﾜｲﾔﾊｰﾈｽ	1	[SCB][RRE]
5	27732-42311		CLAMP	ｸﾗﾝﾌﾟ	10	[SCB][RRE]
6	530C5-33211		WIRE,LEAD	ﾜｲﾔ	1	[SCB][RRE]
7	530C5-33181		BRACKET	ﾌﾞﾗｹｯﾄ	1	[SCB][RRE]
8	25302-42251		RIVET	ﾘﾍﾞｯﾄ	8	[SCB][RRE]
9	524W5-12091	+	GROMMET	ｸﾞﾛﾒｯﾄ	1	[SCB][RRE]

FIG.31 REAR WORKING LIGHT [RWLR][RWLL]

(F40424F0) リヤーワーキング゛ライト

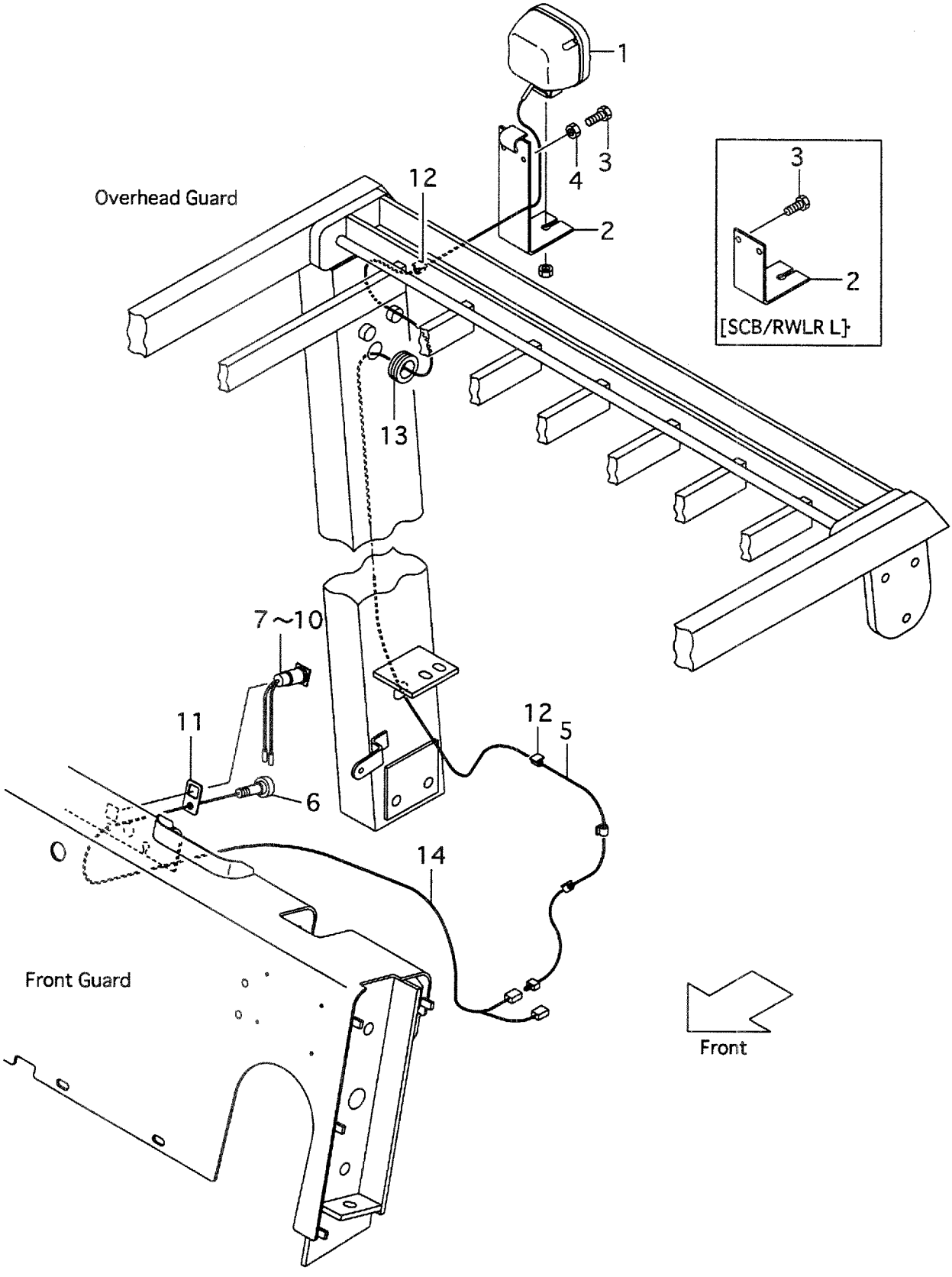

A:FD35C8 D:FD40T8 G:FD50T8 K:FG45T8
B:FD35T8 E:FD45C8 H:FG35T8 L:FG50T8
C:FD40C8 F:FD45T8 J:FG40T8

FIG.31
(F40424F0)

Item No	Part No.	Mark	Description		Req'd	Remarks : Serial No.
1	514A7-10201		LAMP,HEAD	ﾗﾝﾌﾟ	1	A,B,C,D,E,F,G [RWLR][RWLL]SEE FIG.27
-	214A2-40501		LAMP,HEAD	ﾗﾝﾌﾟ	1	H,J,K,L [RWLR][RWLL]SEE FIG.27
2	516G1-42151		BRACKET	ﾌﾞﾗｹｯﾄ	1	[RWLR][RWLL]
-	530C1-42001		BRACKET	ﾌﾞﾗｹｯﾄ	1	[SCB/RWLR][SCB/RWLL]
3	01100-08020		BOLT	ﾎﾞﾙﾄ	3	[RWLR][RWLL]
-	01185-08020		BOLT	ﾎﾞﾙﾄ	2	[SCB/RWLR][SCB/RWLL]
4	01400-00008		NUT	ﾅｯﾄ	3	[RWLR][RWLL]
5	535C1-42101		WIRE,LEAD	ﾜｲﾔ	1	[RWLR][SCB/RWLR][RWLR/BBR] [SCB/RWLR/BBR]
-	516G8-92011		WIRE,LEAD	ﾜｲﾔ	1	[RWLL][SCB/RWLL][RWLL/BBR] [SCB/RWLL/BBR]
6	22672-42501		SWITCH,LAMP	ｽｲｯﾁ	1	[RWLR][RWLL]
7	530C1-42051		LAMP,PILOT	ﾗﾝﾌﾟ	1	A,B,C,D,E,F,G [RWLR][RWLL] INC.8-10
-	522A1-42051		LAMP,PILOT	ﾗﾝﾌﾟ	1	H,J,K,L [RWLR][RWLL] INC.8-10
8	522A1-42061		LENS	ﾚﾝｽﾞ	1	[RWLR][RWLL]
9	29502-42301		SOCKET	ｿｹｯﾄ	1	[RWLR][RWLL]
10	25782-42931		BULB,48V/5W	ﾊﾞﾙﾌﾞ	1	A,B,C,D,E,F,G [RWLR][RWLL]
-	23302-42311		BULB,12V/3.4W	ﾊﾞﾙﾌﾞ	1	H,J,K,L [RWLR][RWLL]
11	530C1-42201		PLATE	ﾌﾟﾚｰﾄ	1	[RWLR][RWLL]
12	27732-42311		CLAMP	ｸﾗﾝﾌﾟ	2	[RWLR][RWLL]
13	524W5-12091		GROMMET	ｸﾞﾛﾒｯﾄ	1	[RWLR][RWLL]
14	535C1-42121		WIRE,LEAD	ﾜｲﾔ	1	A,C,E [BBR/RELR][BBR/RWLL]
-	535C1-42121		WIRE,LEAD	ﾜｲﾔ	1	A,C,E [SCB/RWLR/BBR] [SCB/RWLL/BBR]
-	535E1-42001		WIRE,LEAD	ﾜｲﾔ	1	B,D,F,G [BBR/RELR][BBR/RWLL]
-	535E1-42001		WIRE,LEAD	ﾜｲﾔ	1	B,D,F,G [SCB/RWLR/BBR] [SCB/RWLL/BBR]
-	535E1-42001		WIRE,LEAD	ﾜｲﾔ	1	H,J,K,L [RWLR][RWLL][BBR/RWLL]
15	26402-42191	+	RELAY	ﾘﾚｰ	1	B,D,F,G [BBR/RELR][BBR/RWLL]
-	26402-42191	+	RELAY	ﾘﾚｰ	1	B,D,F,G [SCB/RWLR/BBR] [SCB/RWLL/BBR]
-	26062-42881	+	RELAY	ﾘﾚｰ	1	H,J,K,L [BBR/RELR][BBR/RWLL]
-	26062-42881	+	RELAY	ﾘﾚｰ	1	H,J,K,L [SCB/RWLR/BBR] [SCB/RWLL/BBR]

FIG.31 REAR WORKING LIGHT [RWLR][RWLL]

(F40424F0) リヤーワーキング゛ライト

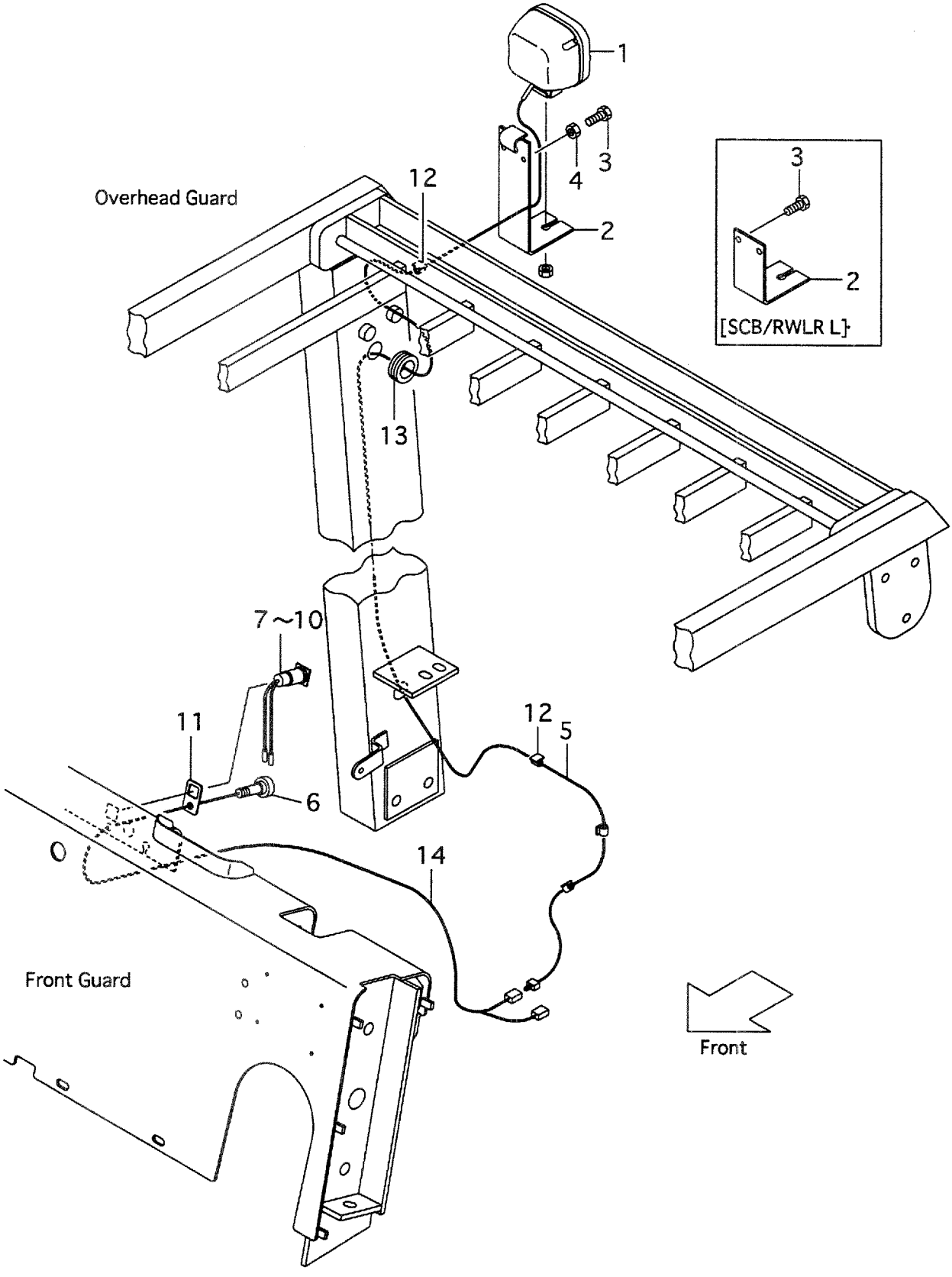

A:FD35C8 D:FD40T8 G:FD50T8 K:FG45T8
B:FD35T8 E:FD45C8 H:FG35T8 L:FG50T8
C:FD40C8 F:FD45T8 J:FG40T8

FIG.31
(F40424F0)

Item No	Part No.	Mark	Description	Req'd	Remarks : Serial No.
16	01183-06012	+	BOLT ﾎﾞﾙﾄ	1	B,D,F,G,H,J,K,L [BBR/RELR][BBR/RWLL]
-	01183-06012	+	BOLT ﾎﾞﾙﾄ	1	B,D,F,G,H,J,K,L [SCB/RWLR/BBR] [SCB/RWLL/BBR]

FIG.32 REAR WORKING LIGHT [RWL2]

(F40424G0) リヤーワーキング゛ライト

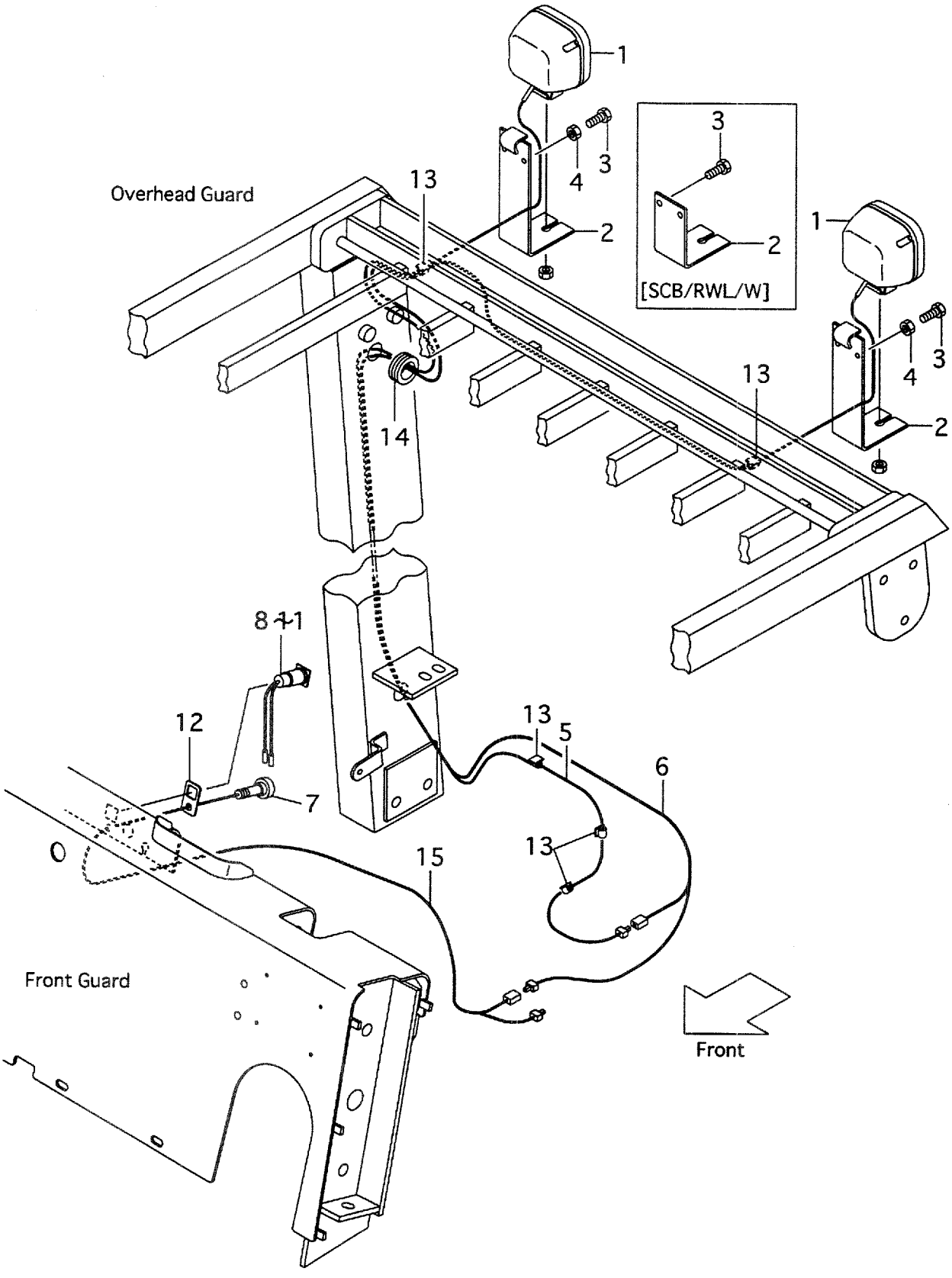

A:FD35C8 D:FD40T8 G:FD50T8 K:FG45T8
B:FD35T8 E:FD45C8 H:FG35T8 L:FG50T8
C:FD40C8 F:FD45T8 J:FG40T8

FIG.32
(F40424G0)

Item No	Part No.	Mark	Description		Req'd	Remarks : Serial No.
1	514A7-10201		LAMP,HEAD	ﾗﾝﾌﾟ	2	A,B,C,D,E,F,G [RWL2]SEE FIG.27
-	214A2-40501		LAMP,HEAD	ﾗﾝﾌﾟ	2	H,J,K,L [RWL2]SEE FIG.27
2	516G1-42151		BRACKET	ﾌﾞﾗｹｯﾄ	2	[RWL2]
-	530C1-42001		BRACKET	ﾌﾞﾗｹｯﾄ	2	[SCB/RWL/W]
3	01100-08020		BOLT	ﾎﾞﾙﾄ	6	[RWL2]
-	01185-08020		BOLT	ﾎﾞﾙﾄ	4	[SCB/RWL/W]
4	01400-00008		NUT	ﾅｯﾄ	6	[RWL2]
5	535C1-42101		WIRE,LEAD,RH	ﾜｲﾔ	1	[RWL2]
6	516G8-92011		WIRE,LEAD,LH	ﾜｲﾔ	1	[RWL2]
7	22672-42501		SWITCH,LAMP	ｽｲｯﾁ	1	[RWL2]
8	530C1-42051		LAMP,PILOT	ﾗﾝﾌﾟ	1	A,B,C,D,E,F,G [RWL2] INC.9-11
-	522A1-42051		LAMP,PILOT	ﾗﾝﾌﾟ	1	H,J,K,L [RWL2] INC.9-11
9	522A1-42061		LENS	ﾚﾝｽﾞ	1	[RWL2]
10	29502-42301		SOCKET	ｿｹｯﾄ	1	[RWL2]
11	25782-42931		BULB,48V/5W	ﾊﾞﾙﾌﾞ	1	A,B,C,D,E,F,G [RWL2]
-	23302-42311		BULB,12V/3.4W	ﾊﾞﾙﾌﾞ	1	H,J,K,L [RWL2]
12	530C1-42201		PLATE	ﾌﾟﾚｰﾄ	1	[RWL2]
13	27732-42311		CLAMP	ｸﾗﾝﾌﾟ	5	[RWL2]
14	524W5-12091		GROMMET	ｸﾞﾛﾒｯﾄ	1	[RWL2]
15	535C1-42121		WIRE,LEAD,REAR CONBINATION LAMP	ﾜｲﾔ	1	A,C,E [RWL2/BBR][SCB/RWL2/BBR]
-	535E1-42001		WIRE,LEAD,REAR CONBINATION LAMP	ﾜｲﾔ	1	B,D,F,G,H,J,K,L [RWL2/BBR][SCB/RWL2/BBR]
16	26402-42191	+	RELAY	ﾘﾚｰ	1	B,D,F,G [RWL2/BBR][SCB/RWL2/BBR]
-	26062-42881	+	RELAY	ﾘﾚｰ	1	H,J,K,L [RWL2/BBR][SCB/RWL2/BBR]
17	01183-06012	+	BOLT	ﾎﾞﾙﾄ	1	B,D,F,G,H,J,K,L [RWL2/BBR][SCB/RWL2/BBR]

FIG.33 REVOLVING LIGHT [RLY][RLR]

(F40424H0) ﾘﾎﾞﾙﾋﾞﾝｸﾞﾗｲﾄ

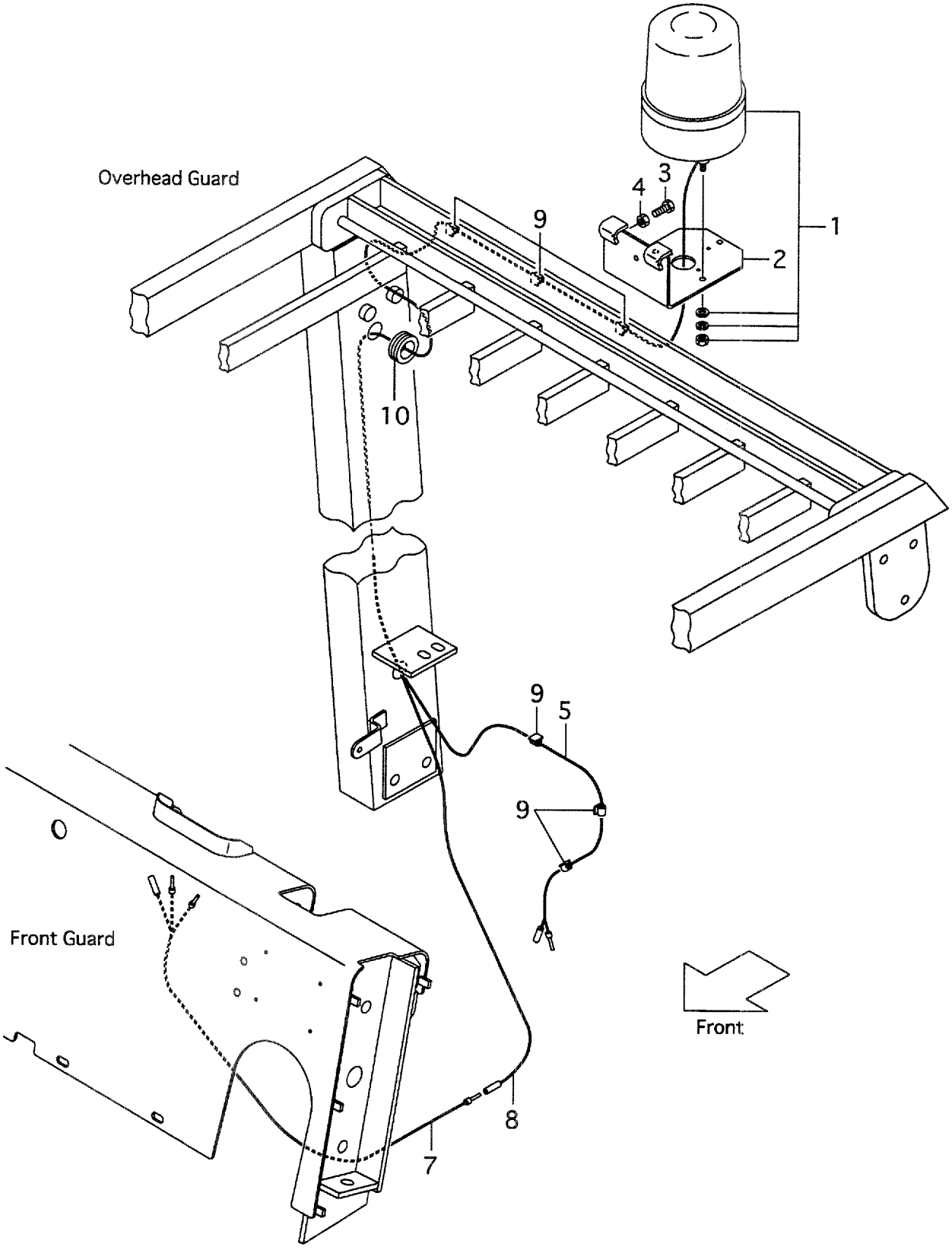

A:FD35C8 D:FD40T8 G:FD50T8 K:FG45T8
B:FD35T8 E:FD45C8 H:FG35T8 L:FG50T8
C:FD40C8 F:FD45T8 J:FG40T8

FIG.33
(F40424H0)

Item No	Part No.	Mark	Description		Req'd	Remarks : Serial No.
1	514A1-41061		LIGHT,REVOLVING,24V	ﾗｲﾄ	1	A,B,C,D,E,F,G [RLY][SCB/RLY]
-	514A1-41021		LIGHT,REVOLVING,12V	ﾗｲﾄ	1	H,J,K,L [RLY][SCB/RLY]
-	514A1-41071		LIGHT,REVOLVING,24V	ﾗｲﾄ	1	A,B,C,D,E,F,G [RLR][SCB/RLR]
-	514A1-41031		LIGHT,REVOLVING,12V	ﾗｲﾄ	1	H,J,K,L [RLR][SCB/RLR]
2	529F1-42201		BRACKET	ﾌﾞﾗｹｯﾄ	1	[RLY][RLR]
-	535C8-92051		BRACKET	ﾌﾞﾗｹｯﾄ	1	[SCB/RLY][SCB/RLR]
3	01100-08020		BOLT	ﾎﾞﾙﾄ	3	[RLY][RLR]
-	01185-08020		BOLT	ﾎﾞﾙﾄ	2	[SCB/RLY][SCB/RLR]
4	01400-00008		NUT	ﾅｯﾄ	3	[RLY][RLR]
5	516G8-92011		WIRE,LEAD	ﾜｲﾔ	1	[RLY][RLR]
-	535C8-92101		WIRE,LEAD	ﾜｲﾔ	1	A,B,C,D,E,F,G [BBR/RLY][BBR/RLR]
-	535C8-92101		WIRE,LEAD	ﾜｲﾔ	1	A,B,C,D,E,F,G [SCB/RLY/BBR][SCB/RLR/BBR]
-	535C8-92111		WIRE,LEAD	ﾜｲﾔ	1	H,J,K:1-175 L:1-106 [BBR/RLY][BBR/RLR]
-	535C8-92101		WIRE,LEAD	ﾜｲﾔ	1	H,J,K:176- L:107- [BBR/RLY][BBR/RLR]
-	535C8-92111		WIRE,LEAD	ﾜｲﾔ	1	H,J,K:1-175 L:1-106 [SCB/RLY/BBR][SCB/RLR/BBR]
-	535C8-92101		WIRE,LEAD	ﾜｲﾔ	1	H,J,K:176- L:107- [SCB/RLY/BBR][SCB/RLR/BBR]
6	516G1-42211	+	WIRE,LEAD	ﾜｲﾔ	1	[RLY][RLR]
7	514A1-42041		WIRE,LEAD	ﾜｲﾔ	1	[RWL/RLY][RWL/RLR)]
-	514A1-42041		WIRE,LEAD	ﾜｲﾔ	1	[SCB/RLY/RWL][SCB/RLR/RWL]
8	530C8-92001		WIRE,LEAD	ﾜｲﾔ	1	[RWL/RLY][RWL/RLR)]
-	530C8-92001		WIRE,LEAD	ﾜｲﾔ	1	[SCB/RLY/RWL][SCB/RLR/RWL]
9	27732-42311		CLAMP	ｸﾗﾝﾌﾟ	4	[RLY][RLR]
10	524W5-12091		GROMMET	ｸﾞﾛﾒｯﾄ	1	[RLY][RLR]
11	26062-42881	+	RELAY	ﾘﾚｰ	1	H,J,K,L [BBR/RLY][BBR/RLR]
-	26062-42881	+	RELAY	ﾘﾚｰ	1	H,J,K,L [SCB/RLY/BBR][SCB/RLR/BBR]
12	01183-06012	+	BOLT	ﾎﾞﾙﾄ	1	H,J,K,L [BBR/RLY][BBR/RLR]
-	01183-06012	+	BOLT	ﾎﾞﾙﾄ	1	H,J,K,L [SCB/RLY/BBR][SCB/RLR/BBR]

FIG.34 BACK BUZZER [BBA]

(F40424J0) ﾊﾞｯｸﾌﾞｻﾞｰ

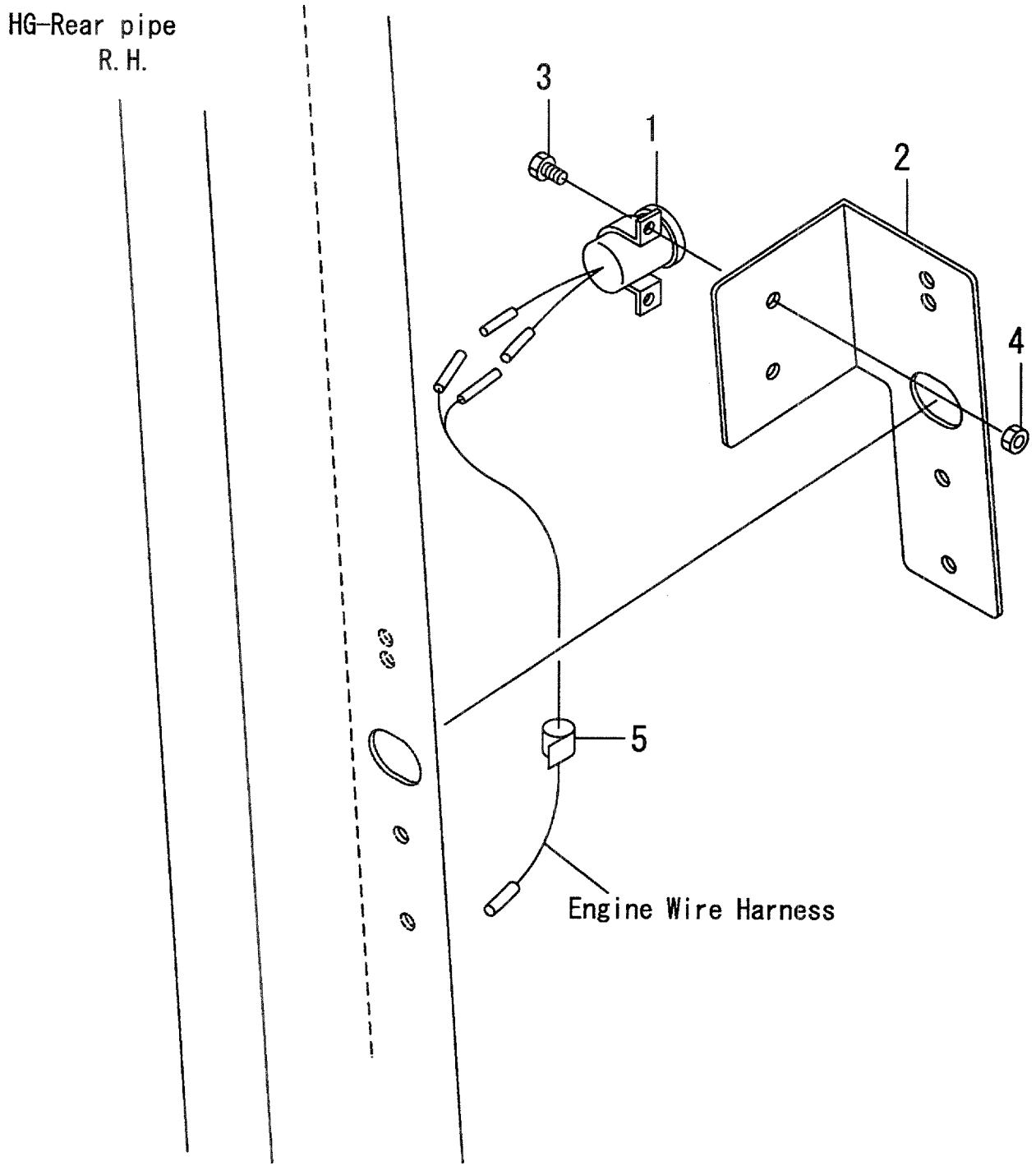

A:FD35C8 D:FD40T8 G:FD50T8 K:FG45T8
B:FD35T8 E:FD45C8 H:FG35T8 L:FG50T8
C:FD40C8 F:FD45T8 J:FG40T8

FIG.34
(F40424J0)

Item No	Part No.	Mark	Description		Req'd	Remarks : Serial No.
1	214A2-44041		BUZZER,BACK	ﾌﾞｻﾞｰ	1	A,B,C,D,E,F,G [BBA]
-	214A2-44001		BUZZER,BACK	ﾌﾞｻﾞｰ	1	H,J,K,L [BBA]
2	535C1-32101		BRACKET	ﾌﾞﾗｹｯﾄ	1	[BBA]
3	01185-06012		BOLT	ﾎﾞﾙﾄ	2	[BBA]
4	01400-00006		NUT	ﾅｯﾄ	2	[BBA]
5	27732-42311		CLIP	ｸﾘｯﾌﾟ	2	[BBA]

FIG.35 CAR HEATER SYSTEM [HR]

(F40424K0) カーヒータシステム

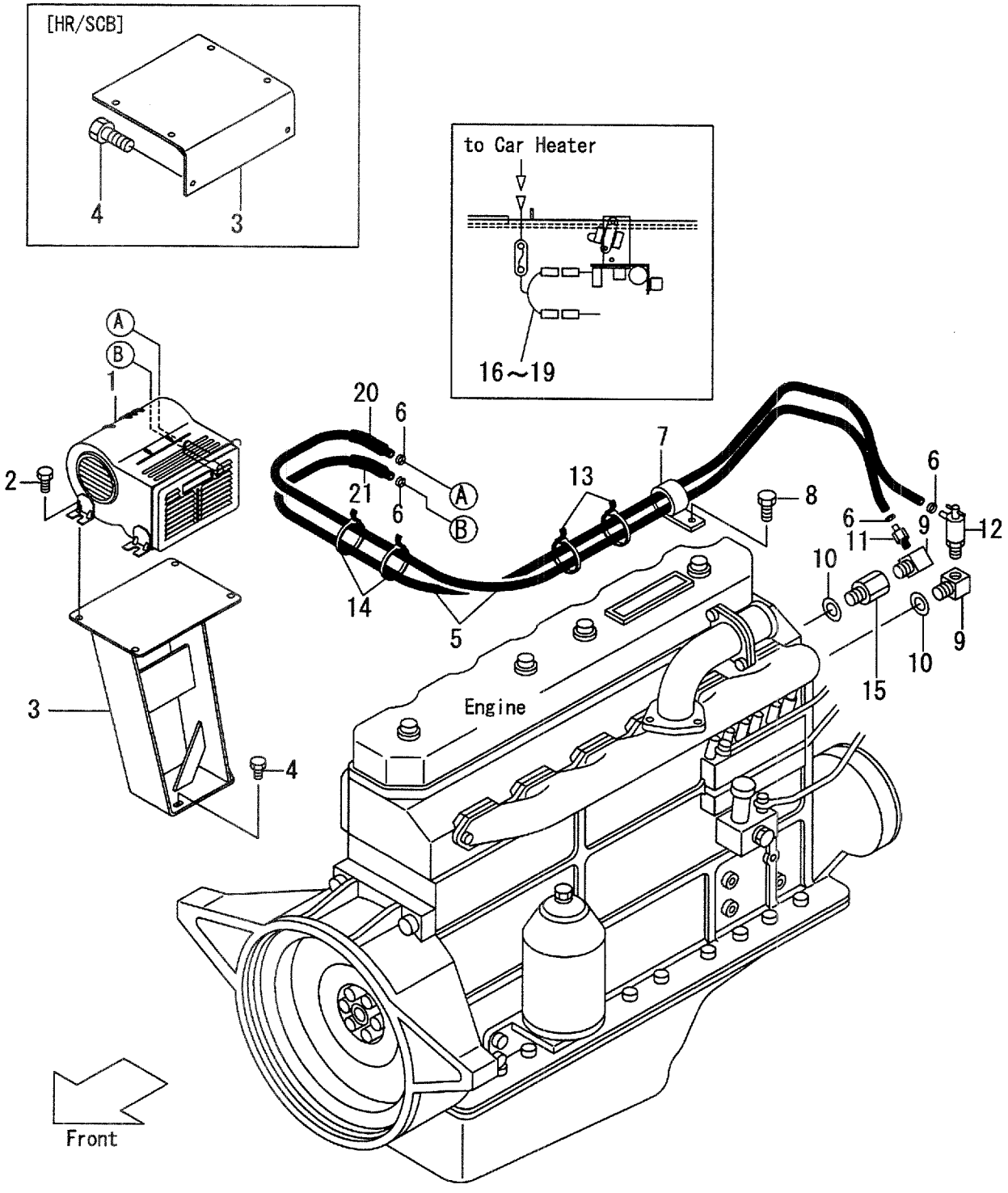

A:FD35C8 D:FD40T8 G:FD50T8 K:FG45T8
B:FD35T8 E:FD45C8 H:FG35T8 L:FG50T8
C:FD40C8 F:FD45T8 J:FG40T8

FIG.35
(F40424K0)

Item No	Part No.	Mark	Description		Req'd	Remarks : Serial No.
1	55787-20101		HEATER-UNIT,CAR	ﾋｰﾀﾕﾆｯﾄ	1	A,B,C,D,E,F,G [HR]SEE FIG.37
2	01186-10016		BOLT	ﾎﾞﾙﾄ	4	A,B,C,D,E,F,G [HR]
3	535C7-22002		BRACKET	ﾌﾞﾗｹｯﾄ	1	A,B,C,D,E,F,G [HR]
-	535C5-30431		BRACKET	ﾌﾞﾗｹｯﾄ	1	A,B,C,D,E,F,G [HR/SCB]
4	01185-08025		BOLT	ﾎﾞﾙﾄ	3	A,B,C,D,E,F,G [HR]
-	01186-10030		BOLT	ﾎﾞﾙﾄ	2	A,B,C,D,E,F,G [HR/SCB]
5	530C7-22051		HOSE,WATER	ﾎｰｽ	2	A,B,C,D,E,F,G [HR]
6	04911-00022		CLIP	ｸﾘｯﾌﾟ	4	A,B,C,D,E,F,G [HR]
7	25597-62201		CLIP	ｸﾘｯﾌﾟ	2	A,B,C,D,E,F,G [HR]
8	01183-08016		BOLT	ﾎﾞﾙﾄ	1	A,B,C,D,E,F,G [HR]
9	55957-22121		ELBOW	ｴﾙﾎﾞ	2	A,B,C,D,E,F,G [HR]
10	3978251		PACKING	ﾊﾟｯｷﾝｸﾞ	2	A,B,C,D,E,F,G [HR]
11	529F7-22001		NIPPLE	ﾆｯﾌﾟﾙ	1	A,B,C,D,E,F,G [HR]
12	56110-63521		VALVE	ﾊﾞﾙﾌﾞ	1	A,B,C,D,E,F,G [HR]
13	27262-42092		BAND	ﾊﾞﾝﾄﾞ	3	A,B,C,D,E,F,G [HR]
14	27042-42312		BAND	ﾊﾞﾝﾄﾞ	2	A,B,C,D,E,F,G [HR]
15	535C7-22111		NIPPLE	ﾆｯﾌﾟﾙ	1	A,B,C,D,E,F,G [HR]
16	27222-62021		FUSE,250V/5A	ﾋｭｰｽﾞ	1	A,B,C,D,E,F,G [HR]
17	514T7-22061		WIRE,LEAD	ﾜｲﾔ	1	A,B,C,D,E,F,G [HR]
18	535C7-22091		WIRE,LEAD	ﾜｲﾔ	1	A,B,C,D,E,F,G [HR]
19	27732-42221		CLIP	ｸﾘｯﾌﾟ	2	A,B,C,D,E,F,G [HR]
20	534A7-22201		PROTECTOR	ﾌﾟﾛﾃｸﾀ	1	A,B,C,D,E,F,G [HR]
21	534A7-22211		PROTECTOR	ﾌﾟﾛﾃｸﾀ	1	A,B,C,D,E,F,G [HR]
22	535C7-21211	+	WIRE,LEAD	ﾜｲﾔ	1	A,B,C,D,E,F:285- G:137- [HR/SCB]

FIG.36 CAR HEATER SYSTEM [HR]

(F40424L0) カーヒータシステム

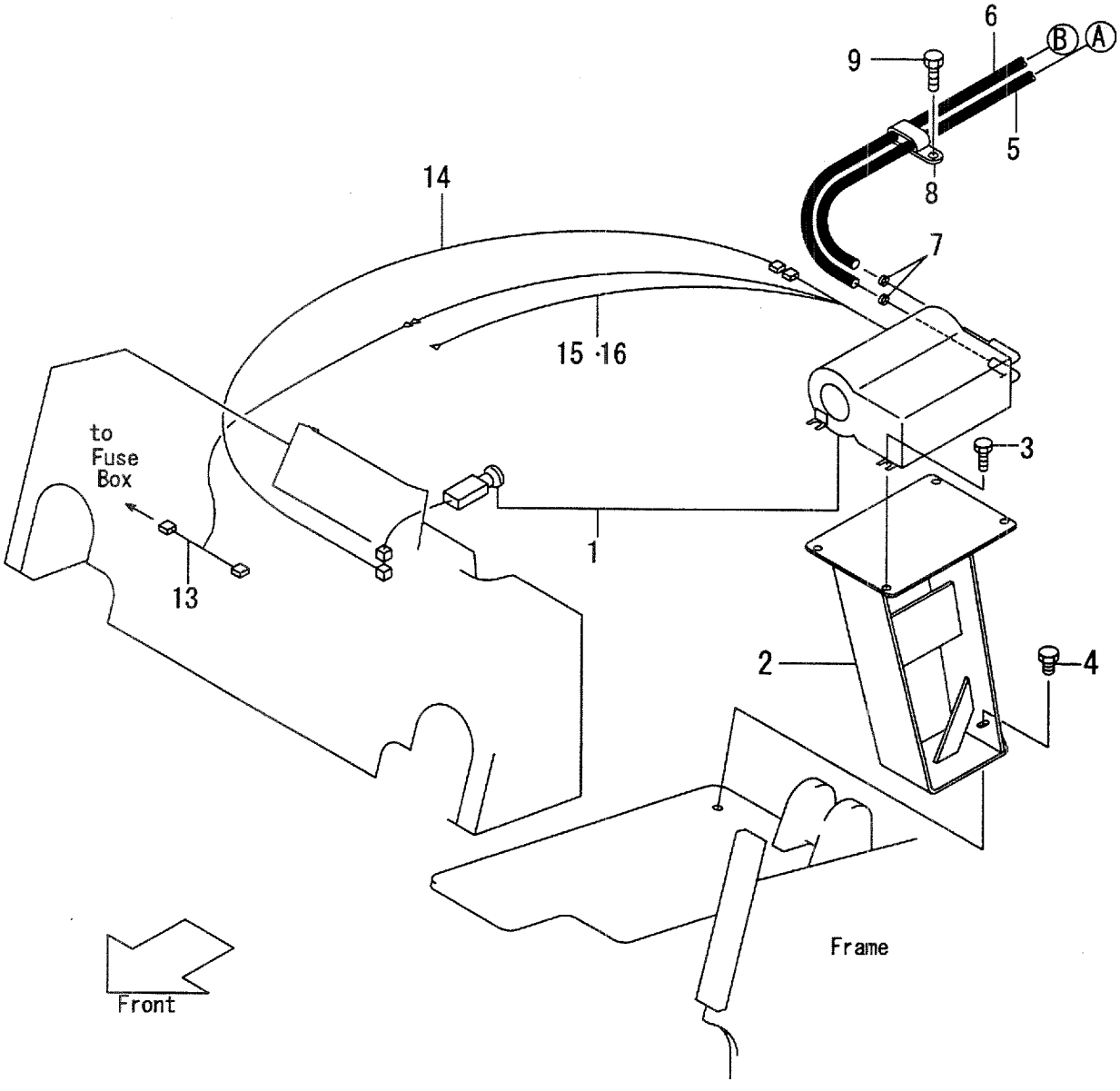

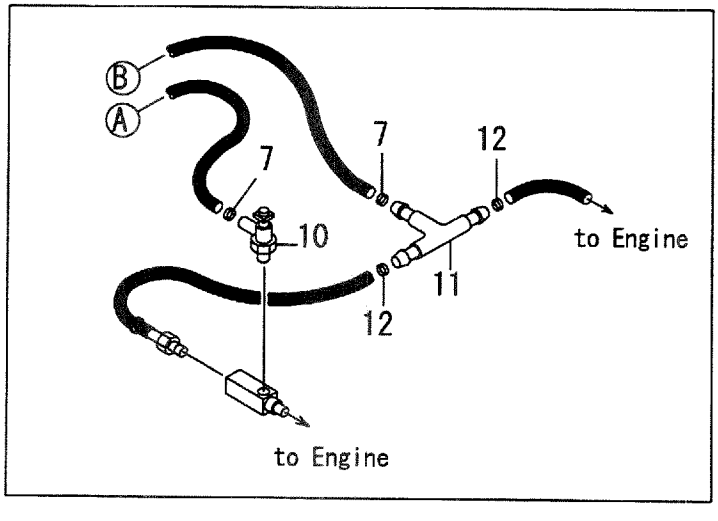

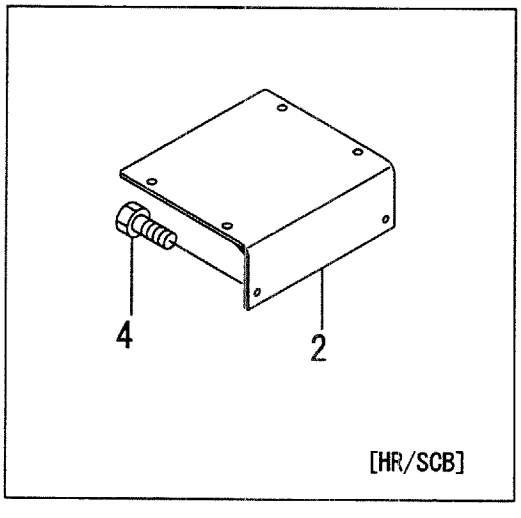

A:FD35C8 D:FD40T8 G:FD50T8 K:FG45T8
B:FD35T8 E:FD45C8 H:FG35T8 L:FG50T8
C:FD40C8 F:FD45T8 J:FG40T8

FIG.36
(F40424L0)

Item No	Part No.	Mark	Description		Req'd	Remarks : Serial No.
1	514T7-20201		HEATER	ﾋｰﾀ	1	B,D,F,G [HR]
2	535C7-22002		BRACKET	ﾌﾞﾗｹｯﾄ	1	B,D,F,G [HR]
-	535C5-30431		BRACKET	ﾌﾞﾗｹｯﾄ	1	B,D,F,G [HR/SCB]
3	01186-10016		BOLT	ﾎﾞﾙﾄ	4	B,D,F,G [HR]
4	01185-08025		BOLT	ﾎﾞﾙﾄ	3	B,D,F,G [HR]
-	01186-10030		BOLT	ﾎﾞﾙﾄ	2	B,D,F,G [HR/SCB]
5	535L7-22011		HOSE	ﾎｰｽ	1	B,D,F,G [HR]
6	535L7-22001		HOSE	ﾎｰｽ	1	B,D,F,G [HR]
7	04911-00022		CLIP	ｸﾘｯﾌﾟ	4	B,D,F,G [HR]
8	25597-62201		CLAMP	ｸﾗﾝﾌﾟ	2	B,D,F,G [HR]
9	01183-08016		BOLT	ﾎﾞﾙﾄ	2	B,D,F,G [HR]
10	535L7-22051		VALVE	ﾊﾞﾙﾌﾞ	1	B,D,F,G [HR]
11	516G7-22001		THREE-WAY	ｽﾘｰｳｴｲ	1	B,D,F,G [HR]
12	04911-00022		CLIP	ｸﾘｯﾌﾟ	2	B,D,F,G [HR]
13	514T7-22061		WIRE,LEAD,FUSE	ﾜｲﾔ	1	B,D,F,G [HR]
14	535C7-21211		WIRE,LEAD,SWITCH	ﾜｲﾔ	1	B,D,F:110- G:103- [HR/SCB]
15	535C7-22091		WIRE,LEAD,SWITCH	ﾜｲﾔ	1	B,D,F,G [HR]
16	27732-42221		CLIP	ｸﾘｯﾌﾟ	2	B,D,F,G [HR]

FIG.37 CAR HEATER UNIT [HR]

(F40424M0) カーヒータユニット

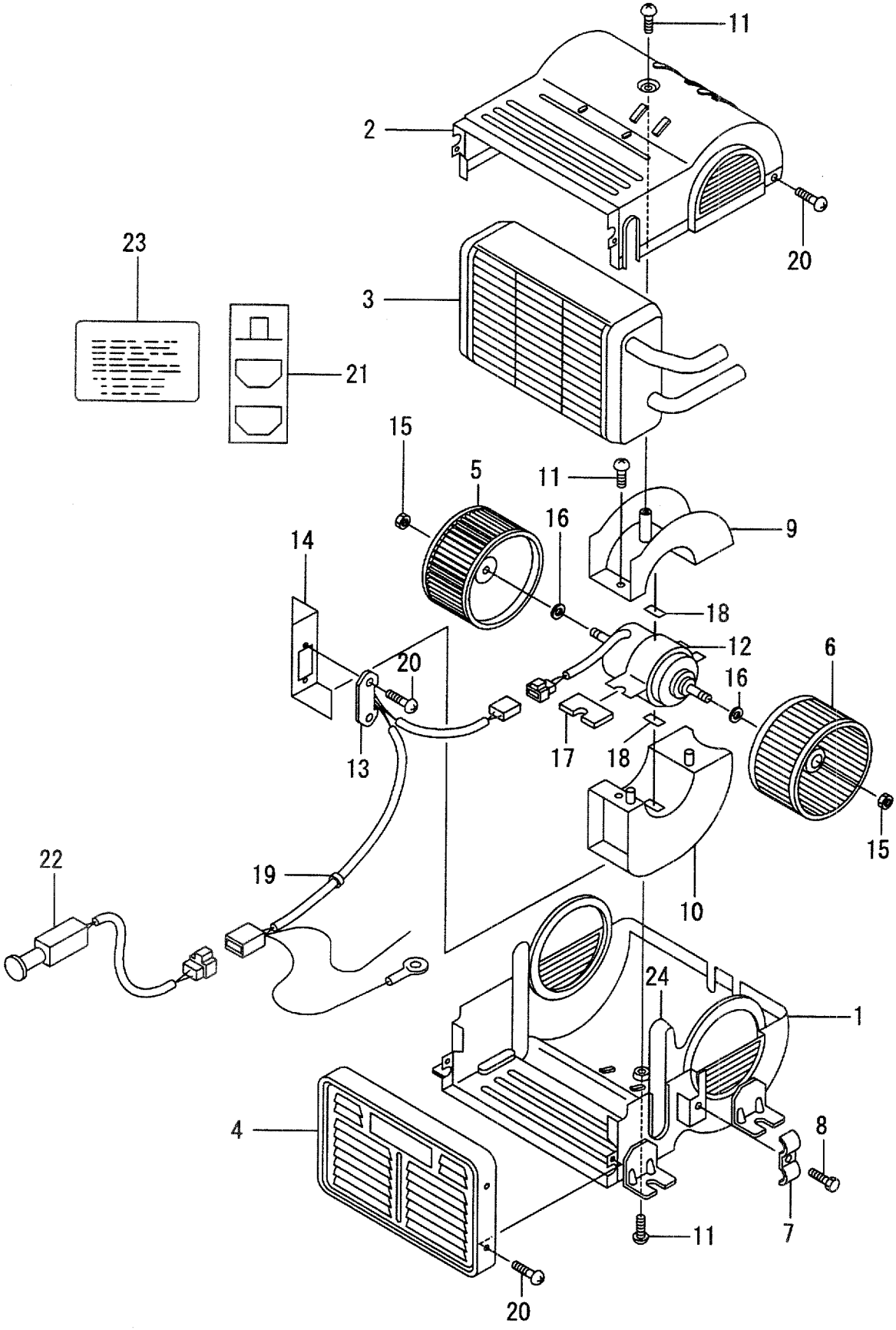

A:FD35C8 D:FD40T8 G:FD50T8 K:FG45T8
B:FD35T8 E:FD45C8 H:FG35T8 L:FG50T8
C:FD40C8 F:FD45T8 J:FG40T8

FIG.37
(F40424M0)

Item No	Part No.	Mark	Description		Req'd	Remarks : Serial No.
A1	55787-20101		HEATER-ASSY,CAR	ｶｰﾋｰﾀｱｯｾﾝ	1	A,B,C,D,E,F,G [HR] INC.1-25
1	55787-22201		CASE	ｹｰｽ	1	A,B,C,D,E,F,G [HR]
2	55787-22211		CASE	ｹｰｽ	1	A,B,C,D,E,F,G [HR]
3	55787-22221		RADIATOR	ﾗｼﾞｴｰﾀ	1	A,B,C,D,E,F,G [HR]
4	55787-22231		COVER	ｶﾊﾞｰ	1	A,B,C,D,E,F,G [HR]
5	55787-22241		FAN	ﾌｧﾝ	1	A,B,C,D,E,F,G [HR]
6	55787-22251		FAN	ﾌｧﾝ	1	A,B,C,D,E,F,G [HR]
7	55787-22261		CLAMP	ｸﾗﾝﾌﾟ	1	A,B,C,D,E,F,G [HR]
8	55787-22271		BOLT	ﾎﾞﾙﾄ	1	A,B,C,D,E,F,G [HR]
9	55787-22281		HOLDER	ﾎﾙﾀﾞ	1	A,B,C,D,E,F,G [HR]
10	55787-22291		HOLDER	ﾎﾙﾀﾞ	1	A,B,C,D,E,F,G [HR]
11	55787-22301		SCREW	ｽｸﾘｭ	4	A,B,C,D,E,F,G [HR]
12	78467-14911		MOTOR	ﾓｰﾀ	1	A,B,C,D,E,F,G [HR]
13	55787-22311		RESISTOR	ﾚｼﾞｽﾀ	1	A,B,C,D,E,F,G [HR]
14	55787-22321		PLATE	ﾌﾟﾚｰﾄ	1	A,B,C,D,E,F,G [HR]
15	26609-17361		NUT	ﾅｯﾄ	2	A,B,C,D,E,F,G [HR]
16	26609-17371		WASHER	ﾜｯｼｬ	2	A,B,C,D,E,F,G [HR]
17	55787-22341		PACKING	ﾊﾟｯｷﾝｸﾞ	2	A,B,C,D,E,F,G [HR]
18	55787-22351		PACKING	ﾊﾟｯｷﾝｸﾞ	2	A,B,C,D,E,F,G [HR]
19	55787-22361		GROMMET	ｸﾞﾛﾒｯﾄ	1	A,B,C,D,E,F,G [HR]
20	55787-22371		SCREW	ｽｸﾘｭ	10	A,B,C,D,E,F,G [HR]
21	55787-22381		ORNAMENT	ｵｰﾅﾒﾝﾄ	1	A,B,C,D,E,F,G [HR]
22	56601-62451		SWITCH	ｽｲｯﾁ	1	A,B,C,D,E,F,G [HR]
23	55787-22391		PLATE,CAUTION	ﾌﾟﾚｰﾄ	1	A,B,C,D,E,F,G [HR]
24	55787-22401		PACKING	ﾊﾟｯｷﾝｸﾞ	1	A,B,C,D,E,F,G [HR]

FIG.37 CAR HEATER UNIT [HR]

(F40424M0) カーヒータユニット

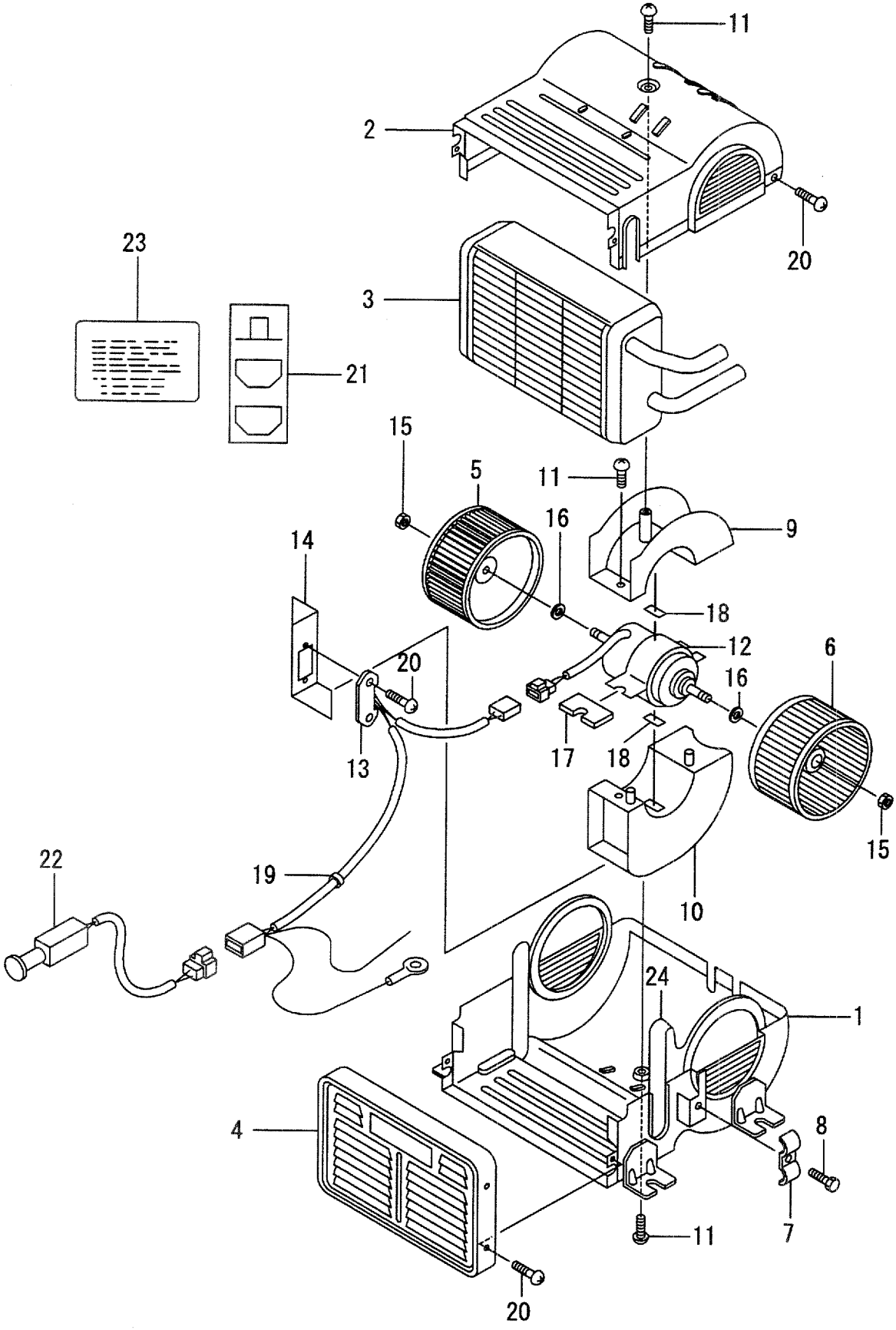

A:FD35C8 D:FD40T8 G:FD50T8 K:FG45T8
B:FD35T8 E:FD45C8 H:FG35T8 L:FG50T8
C:FD40C8 F:FD45T8 J:FG40T8

FIG.37
(F40424M0)

Item No	Part No.	Mark	Description	Req'd	Remarks : Serial No.
25	55787-22331	+	PACKING パッキング	2	A,B,C,D,E,F,G [HR]

FIG.38 AMMETER [AM]

(F40424N0) アンメータ

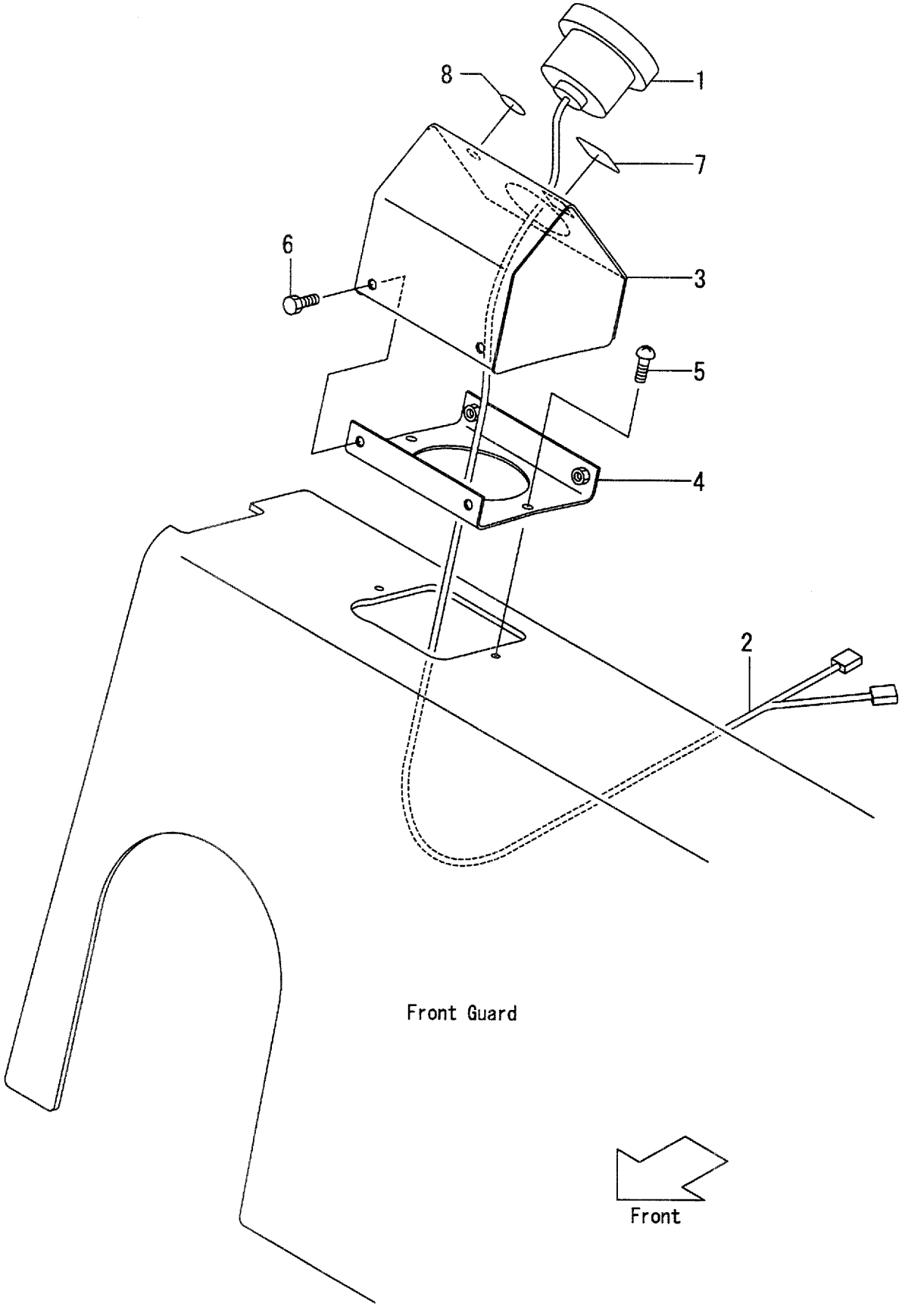

A:FD35C8 D:FD40T8 G:FD50T8 K:FG45T8
B:FD35T8 E:FD45C8 H:FG35T8 L:FG50T8
C:FD40C8 F:FD45T8 J:FG40T8

FIG.38
(F40424N0)

Item No	Part No.	Mark	Description		Req'd	Remarks : Serial No.
1	3956323		AMMETER,50A	ｱﾝﾒｰﾀ	1	[AM]
2	516G6-12051		WIRE,LEAD	ﾜｲﾔ	1	[AM]
3	516G6-90401		BOX	ﾎﾞｯｸｽ	1	[AM]
4	516G1-42021		BRACKET	ﾌﾞﾗｹｯﾄ	1	[AM]
5	214A6-42771		SCREW	ｽｸﾘｭ	2	[AM]
6	216G5-42261		BOLT	ﾎﾞﾙﾄ	4	[AM]
7	229F6-42201		SEAL	ｼｰﾙ	1	[AM]
8	229F6-42211		SEAL	ｼｰﾙ	1	[AM]

FIG.39 TORQUE CONVERTER PRESSURE METER [TPM]

(F40424P0) トルクコンバータプレッシャメータ

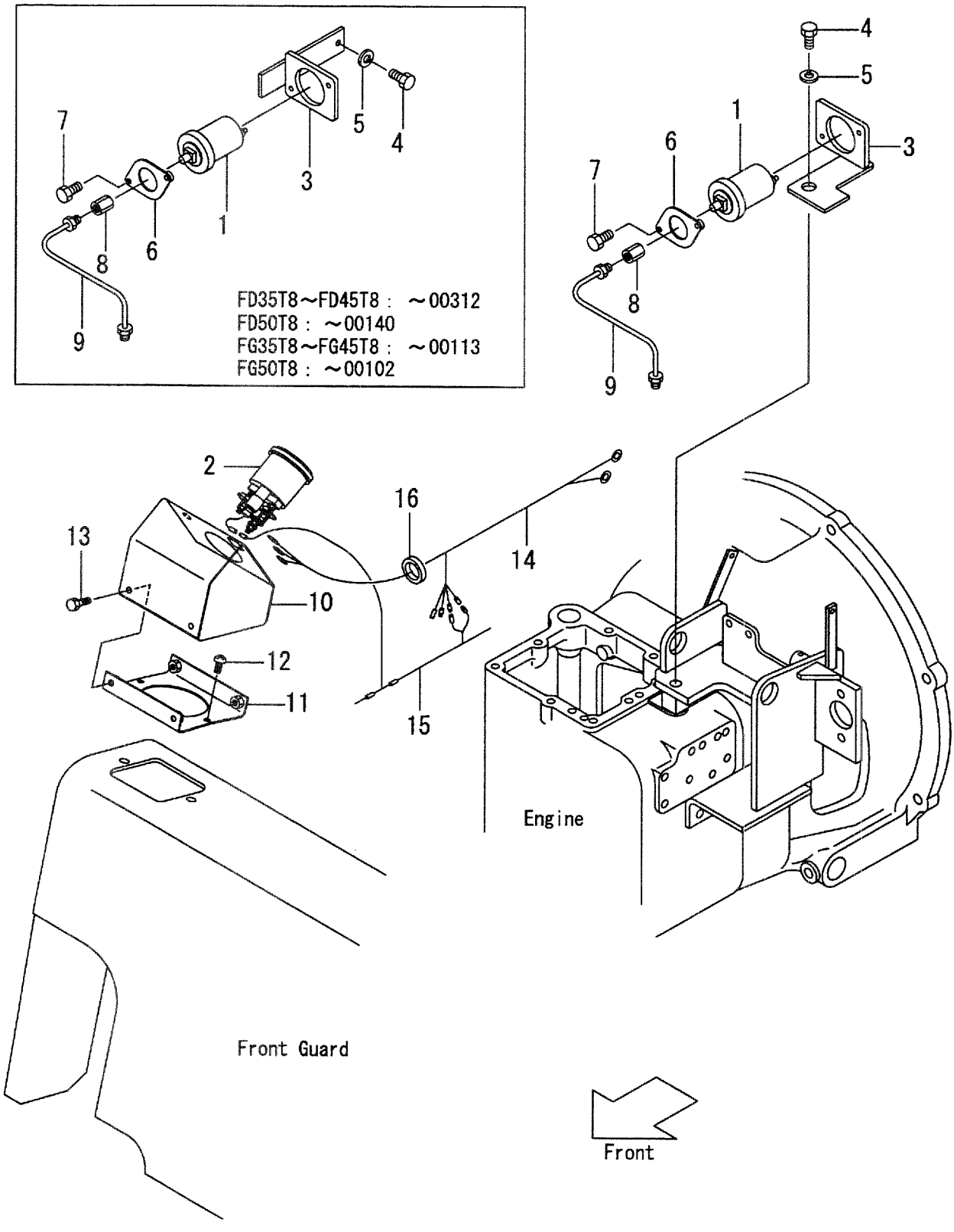

A:FD35C8 D:FD40T8 G:FD50T8 K:FG45T8
B:FD35T8 E:FD45C8 H:FG35T8 L:FG50T8
C:FD40C8 F:FD45T8 J:FG40T8

FIG.39
(F40424P0)

Item No	Part No.	Mark	Description		Req'd	Remarks : Serial No.
1	516G6-92001		SENSOR,PRESSURE	ｾﾝｻ	1	B,D,F,G,H,J,K,L [TPM]
2	516G6-92021		GAUGE,PRESSURE	ｹﾞｰｼﾞ	1	B,D,F,G,H,J,K,L [TPM]
3	535E6-92101		BRACKET	ﾌﾞﾗｹｯﾄ	1	B,D,F:1-312 G:1-140 H,J,K:1-113 L:1-102 [TPM]
-	535E6-92001		BRACKET	ﾌﾞﾗｹｯﾄ	1	B,D,F:313- G:141- H,J,K:114- L:103- [TPM]
4	01100-06060		BOLT	ﾎﾞﾙﾄ	2	B,D,F:1-312 G:1-140 H,J,K:1-113 L:1-102 [TPM]
-	01111-16025		BOLT	ﾎﾞﾙﾄ	1	B,D,F:313- G:141- H,J,K:114- L:103- [TPM]
5	02010-00006		WASHER	ﾜｯｼｬ	2	B,D,F:1-312 G:1-140 H,J,K:1-113 L:1-102 [TPM]
-	02010-00016		WASHER	ﾜｯｼｬ	1	B,D,F:313- G:141- H,J,K:114- L:103- [TPM]
6	516G6-92151		COVER	ｶﾊﾞｰ	1	B,D,F,G,H,J,K,L [TPM]
7	01186-08025		BOLT	ﾎﾞﾙﾄ	2	B,D,F,G,H,J,K,L [TPM]
8	516G6-92031		ADAPTER	ｱﾀﾞﾌﾟﾀ	1	B,D,F,G,H,J,K,L [TPM]
9	535E6-90201		PIPE	ﾊﾟｲﾌﾟ	1	B,D,F,G,H,J,K,L [TPM]
10	516G6-90401		BOX,METER	ﾎﾞｯｸｽ	1	B,D,F,G,H,J,K,L [TPM]
11	516G1-42021		BRACKET	ﾌﾞﾗｹｯﾄ	1	B,D,F,G,H,J,K,L [TPM]
12	214A6-42252		SCREW	ｽｸﾘｭ	2	B,D,F,G,H,J,K,L [TPM]
13	214A6-42771		BOLT	ﾎﾞﾙﾄ	4	B,D,F,G,H,J,K,L [TPM]

FIG.39 TORQUE CONVERTER PRESSURE METER [TPM]

(F40424P0) トルクコンバータプレッシャメータ

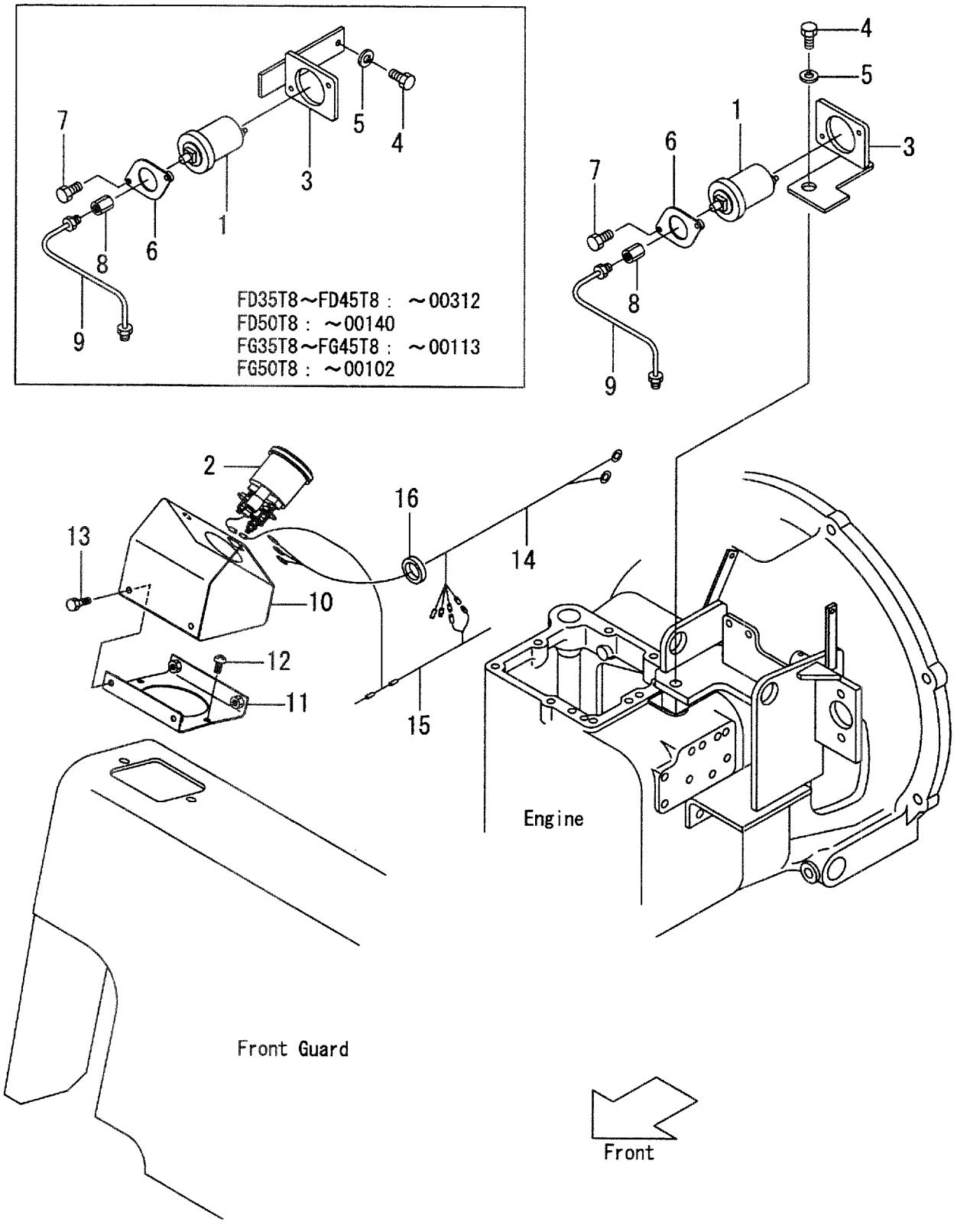

A:FD35C8 D:FD40T8 G:FD50T8 K:FG45T8
B:FD35T8 E:FD45C8 H:FG35T8 L:FG50T8
C:FD40C8 F:FD45T8 J:FG40T8

FIG.39
(F40424P0)

Item No	Part No.	Mark	Description		Req'd	Remarks : Serial No.
14	516G6-92201		WIRE-HARNESS	ﾜｲﾔﾊｰﾈｽ	1	B,D,F,G,H,J,K,L [TPM]
15	516G6-92211		WIRE-HARNESS	ﾜｲﾔﾊｰﾈｽ	1	B,D,F,G,H,J,K,L [TPM]
16	27042-42312		BAND	ﾊﾞﾝﾄﾞ	3	B,D,F,G,H,J,K,L [TPM]
17	229F6-42201	+	SEAL,COVER	ｼｰﾙ	1	B,D,F,G,H,J,K,L [TPM]
18	229F6-42211	+	SEAL,COVER	ｼｰﾙ	2	B,D,F,G,H,J,K,L [TPM]

FIG.40 CONTROL UNIT [EXE,EXN]

(F40424Q0) コントロールユニット

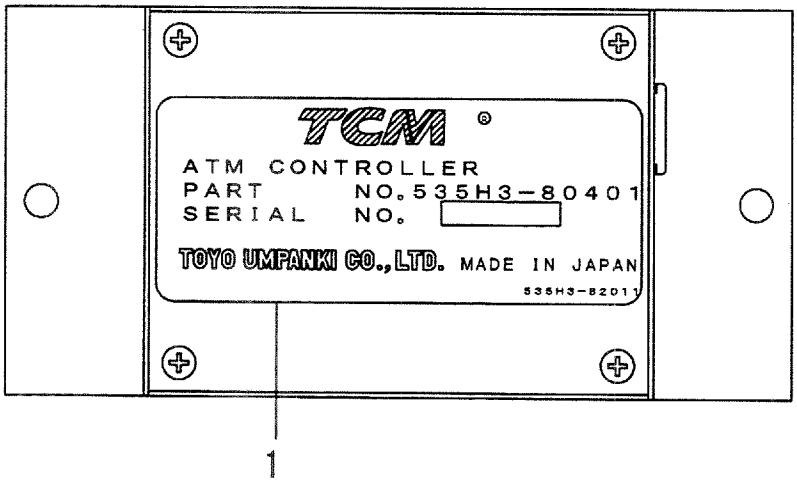

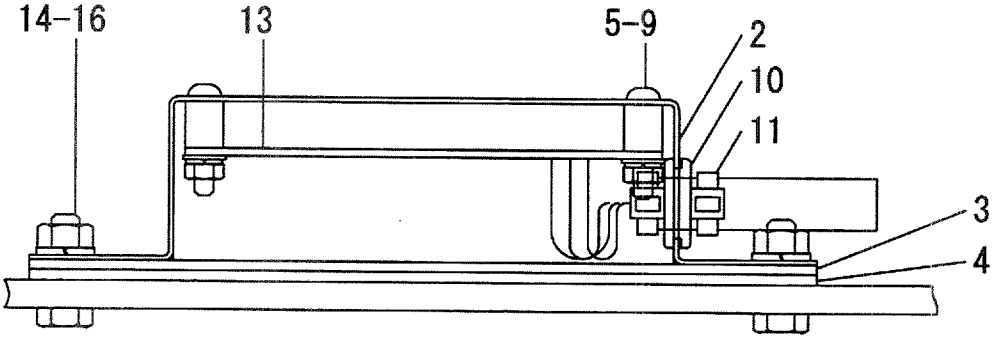

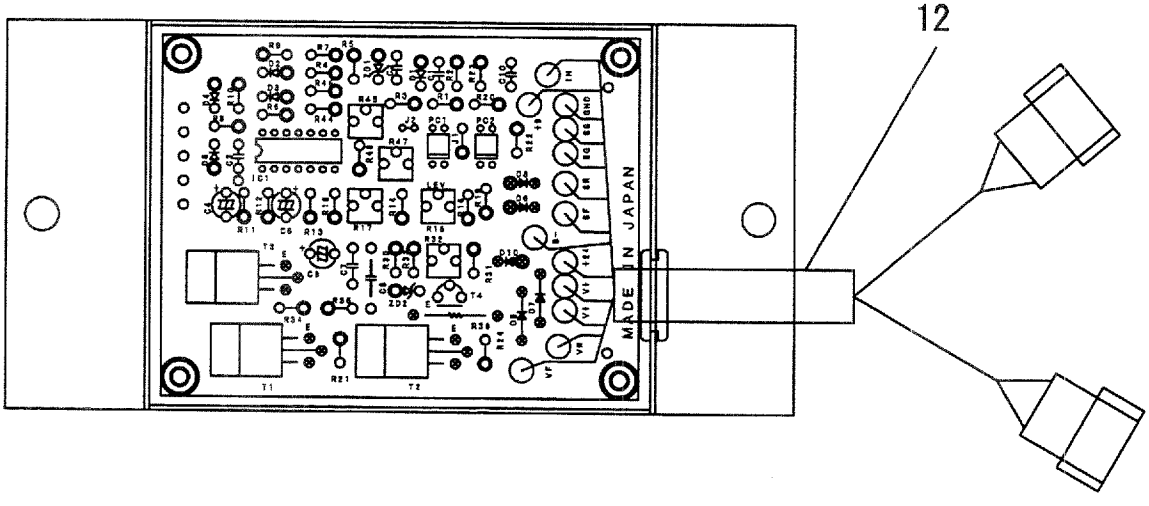

A:FD35C8 D:FD40T8:692- G:FD50T8:194- K:FG45T8:172-
B:FD35T8:692- E:FD45C8 H:FG35T8:172- L:FG50T8:107-
C:FD40C8 F:FD45T8:692- J:FG40T8:172-

FIG.40
(F40424Q0)

Item No	Part No.	Mark	Description		Req'd	Remarks : Serial No.
A1	535H3-80401		UNIT-ASSY,CONTROL	ｺﾝﾄﾛｰﾙﾕﾆｯﾄｱｯｾﾝ	1	B,D,F,G INC.1-16
-	535N3-80401		UNIT-ASSY,CONTROL	ｺﾝﾄﾛｰﾙﾕﾆｯﾄｱｯｾﾝ	1	H,J,K,L INC.1-16
1	535H3-82011		PLATE,NAME	ﾌﾟﾚｰﾄ	1	B,D,F,G
-	535N3-82011		PLATE,NAME	ﾌﾟﾚｰﾄ	1	H,J,K,L
2	55792-52601		CASE	ｹｰｽ	1	B,D,F,G,H,J,K,L
3	55792-52611		SEAT	ｼｰﾄ	1	B,D,F,G,H,J,K,L
4	55792-52621		PLATE	ﾌﾟﾚｰﾄ	1	B,D,F,G,H,J,K,L
5	27042-64311		SPACER	ｽﾍﾟｰｻ	4	B,D,F,G,H,J,K,L
6	01030-04020		SCREW	ｽｸﾘｭ	4	B,D,F,G,H,J,K,L
7	01400-00004		NUT	ﾅｯﾄ	4	B,D,F,G,H,J,K,L
8	02010-00004		WASHER	ﾜｯｼｬ	4	B,D,F,G,H,J,K,L
9	02000-00004		WASHER	ﾜｯｼｬ	4	B,D,F,G,H,J,K,L
10	205A2-63311		GROMMET	ｸﾞﾛﾒｯﾄ	1	B,D,F,G,H,J,K,L
11	27042-42312		BAND	ﾊﾞﾝﾄﾞ	2	B,D,F,G,H,J,K,L
12	55792-52641		WIRE-HARNESS	ﾜｲﾔﾊｰﾈｽ	1	B,D,F,G,H,J,K,L
13	535H3-80501		BOARD,PRINTED	ﾎﾞｰﾄﾞ	1	B,D,F,G
-	535N3-80501		BOARD,PRINTED	ﾎﾞｰﾄﾞ	1	H,J,K,L
14	01100-06020		BOLT	ﾎﾞﾙﾄ	2	B,D,F,G,H,J,K,L
15	02010-00006		WASHER	ﾜｯｼｬ	2	B,D,F,G,H,J,K,L
16	01400-00006		NUT	ﾅｯﾄ	2	B,D,F,G,H,J,K,L
17	01183-06030	+	BOLT	ﾎﾞﾙﾄ	2	B,D,F,G,H,J,K,L
18	256C5-62551	+	COLLAR	ｶﾗｰ	2	B,D,F,G,H,J,K,L
19	26402-42191	+	RELAY	ﾘﾚｰ	2	B,D,F,G
-	26062-42881	+	RELAY	ﾘﾚｰ	2	H,J,K,L
20	534A7-50601	+	WIRE-HARNESS,SAS	ﾜｲﾔﾊｰﾈｽ	1	B,D,F,G,H,J,K,L
21	535H3-82201	+	WIRE-HARNESS,CREEP A	ﾜｲﾔﾊｰﾈｽ	1	B,D,F,G,H,J,K,L
22	535H3-82211	+	WIRE-HARNESS,CREEP B	ﾜｲﾔﾊｰﾈｽ	1	B,D,F,G,H,J,K,L
23	29502-62611	+	SWITCH,MICRO	ｽｲｯﾁ	1	B,D,F,G,H,J,K,L
24	535H3-82261	+	WIRE-HARNESS	ﾜｲﾔﾊｰﾈｽ	1	B,D,F,G,H,J,K,L
25	57042-72091	+	SWITCH	ｽｲｯﾁ	1	F,G,K,L

FIG.41 DRIVE UNIT MOUNT (C-TYPE)

(F4042510) ﾄﾞﾗｲﾌﾞﾕﾆｯﾄﾏｳﾝﾄ

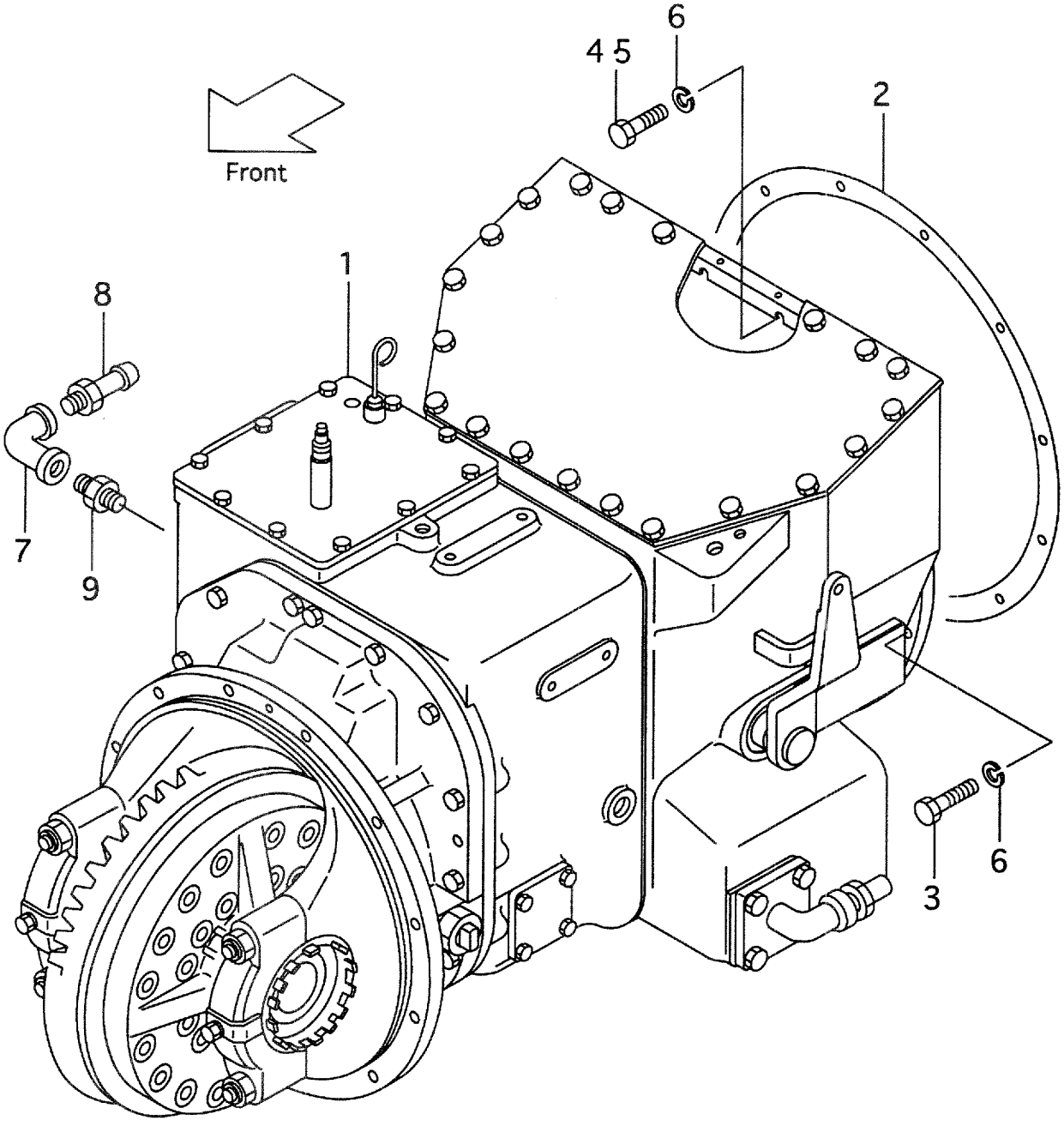

A:FD35C8 D:FD40T8 G:FD50T8 K:FG45T8
B:FD35T8 E:FD45C8 H:FG35T8 L:FG50T8
C:FD40C8 F:FD45T8 J:FG40T8

FIG.41
(F4042510)

Item No	Part No.	Mark	Description		Req'd	Remarks : Serial No.
1	135C2-50001		UNIT,DRIVE	ﾄﾞﾗｲﾌﾞﾕﾆｯﾄ	1	A,C,E
						SEE FIG.43
2	214L2-52001		GASKET	ｶﾞｽｹｯﾄ	1	A,C,E
3	01106-10040		BOLT	ﾎﾞﾙﾄ	5	A,C,E
4	01106-10035		BOLT	ﾎﾞﾙﾄ	4	A,C,E
5	01106-10050		BOLT	ﾎﾞﾙﾄ	4	A,C,E
6	02011-00010		WASHER	ﾜｯｼｬ	13	A,C,E
7	04011-00404		ELBOW	ｴﾙﾎﾞ	1	A,C,E
8	04100-00406		FITTING	ﾌｨｯﾃｨﾝｸﾞ	1	A,C,E
9	04015-00404		NIPPLE	ﾆｯﾌﾟﾙ	1	A,C,E

FIG.42 DRIVE UNIT MOUNT (T-TYPE)

(F4042520) ﾄﾞﾗｲﾌﾞﾕﾆｯﾄﾏｳﾝﾄ

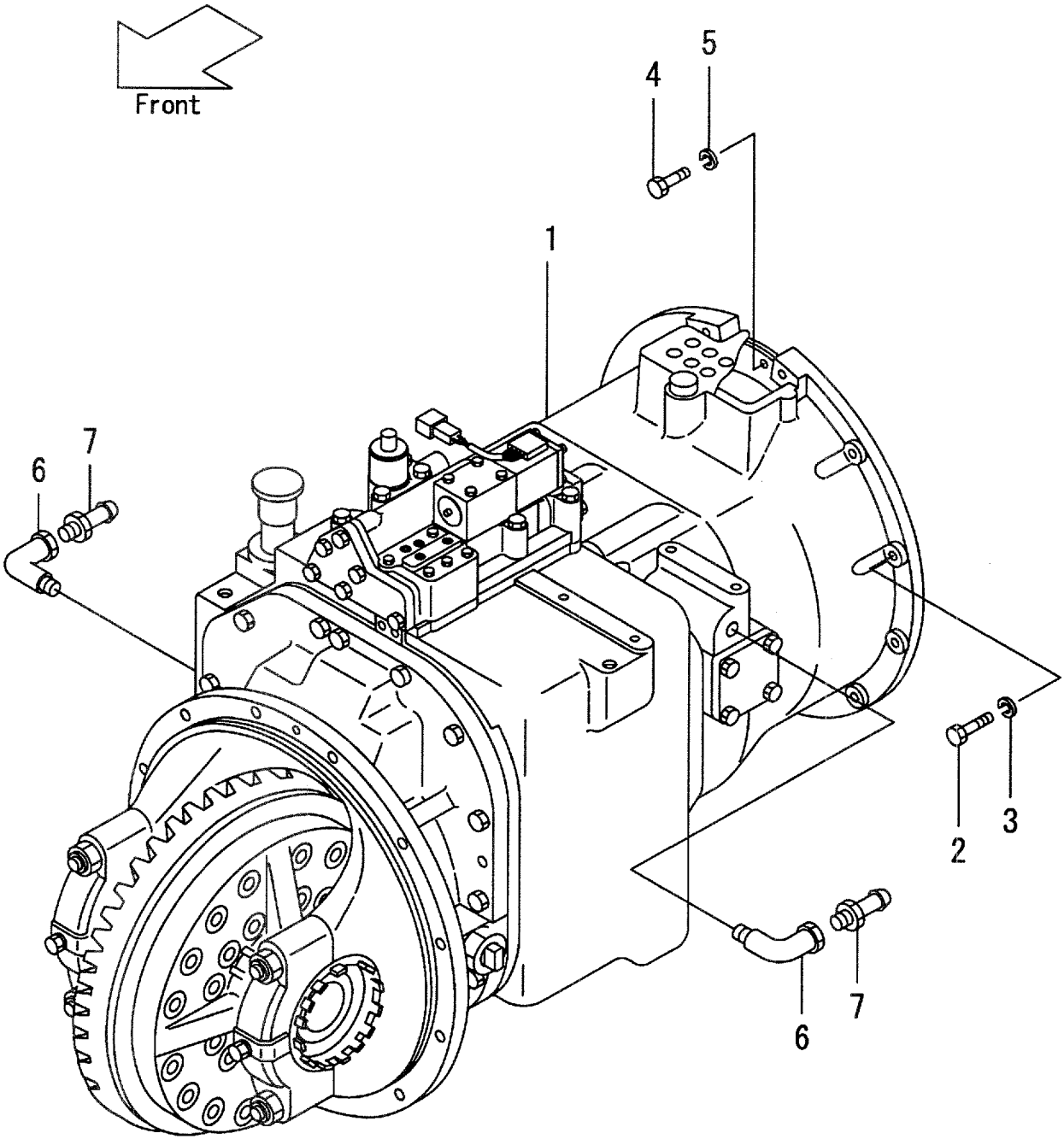

A:FD35C8 D:FD40T8 G:FD50T8 K:FG45T8
B:FD35T8 E:FD45C8 H:FG35T8 L:FG50T8
C:FD40C8 F:FD45T8 J:FG40T8

FIG.42
(F4042520)

Item No	Part No.	Mark	Description		Req'd	Remarks : Serial No.
1	135E2-50001		UNIT,DRIVE	ﾄﾞﾗｲﾌﾞﾕﾆｯﾄ	1	B,D SEE FIG.46
-	135H2-50001		UNIT,DRIVE	ﾄﾞﾗｲﾌﾞﾕﾆｯﾄ	1	F,G SEE FIG.48
-	135L2-50001		UNIT,DRIVE	ﾄﾞﾗｲﾌﾞﾕﾆｯﾄ	1	H,J SEE FIG.46
-	135N2-50001		UNIT,DRIVE	ﾄﾞﾗｲﾌﾞﾕﾆｯﾄ	1	K,L SEE FIG.48
-	135E2-50051		UNIT,DRIVE	ﾄﾞﾗｲﾌﾞﾕﾆｯﾄ	1	B,D [MDK]SEE FIG.46
-	135H2-50051		UNIT,DRIVE	ﾄﾞﾗｲﾌﾞﾕﾆｯﾄ	1	F,G [MDK]SEE FIG.48
-	135L2-50051		UNIT,DRIVE	ﾄﾞﾗｲﾌﾞﾕﾆｯﾄ	1	H,J [MDK]SEE FIG.48
-	135N2-50051		UNIT,DRIVE	ﾄﾞﾗｲﾌﾞﾕﾆｯﾄ	1	K,L [MDK]SEE FIG.48
-	535E3-80001		UNIT,DRIVE	ﾄﾞﾗｲﾌﾞﾕﾆｯﾄ	1	B,D:692- [EXE][EXN]SEE FIG.46
-	535L3-80001		UNIT,DRIVE	ﾄﾞﾗｲﾌﾞﾕﾆｯﾄ	1	H,J:172- [EXE][EXN]SEE FIG.46
2	01106-10045		BOLT	ﾎﾞﾙﾄ	13	B,D,F,G,H,J,K,L
3	02011-00010		WASHER	ﾜｯｼｬ	13	B,D,F,G,H,J,K,L
4	01116-10020		BOLT	ﾎﾞﾙﾄ	10	B,D,F,G,H,J,K,L [SM/DEF]
5	02011-00010		WASHER	ﾜｯｼｬ	10	B,D,F,G,H,J,K,L
6	04012-00404		ELBOW	ｴﾙﾎﾞ	2	B,D,F,G,H,J,K,L
-	04012-00404		ELBOW	ｴﾙﾎﾞ	1	B,D,F,G [CRC]
7	25277-82012		FITTING	ﾌｨｯﾃｨﾝｸﾞ	2	B,D,F,G,H,J,K,L
-	25277-82012		FITTING	ﾌｨｯﾃｨﾝｸﾞ	1	B,D,F,G [CRC]
8	63110-12061	+	ELBOW	ｴﾙﾎﾞ	1	B,D,F,G [CRC]

FIG.43 DRIVE UNIT (1/3) (C-TYPE)

(F4042530) ﾄﾞﾗｲﾌﾞﾕﾆｯﾄ(1/3)

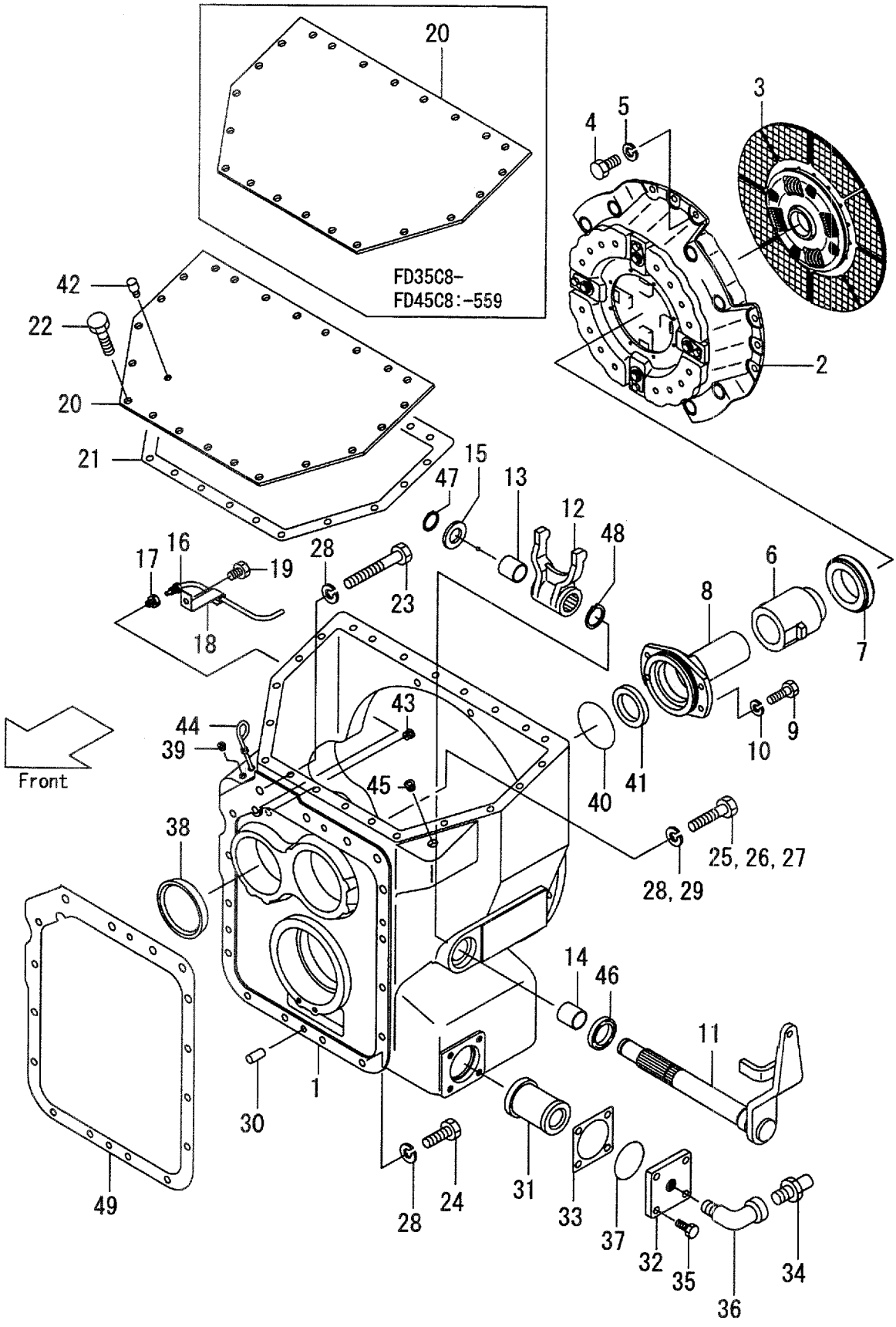

A:FD35C8 D:FD40T8 G:FD50T8 K:FG45T8
B:FD35T8 E:FD45C8 H:FG35T8 L:FG50T8
C:FD40C8 F:FD45T8 J:FG40T8

FIG.43
(F4042530)

Item No	Part No.	Mark	Description		Req'd	Remarks : Serial No.
A1	135C2-50001		UNIT-ASSY,DRIVE	ﾄﾞﾗｲﾌﾞﾕﾆｯﾄｱｯｾﾝ	1	A,C,E
						(24T-25)
						INC.1-49 & FIG.44,45
1	135C3-12001		CASE	ｹｰｽ	1	A,C,E:1-559
-	135C3-12002		CASE	ｹｰｽ	1	A,C,E:560-
2	135C3-12051		COVER,CLUTCH	ｶﾊﾞｰ	1	A,C,E
3	135C3-12061		DISK,CLUTCH	ﾃﾞｨｽｸ	1	A,C,E
4	01116-10020		BOLT	ﾎﾞﾙﾄ	10	A,C,E
5	02011-00010		WASHER	ﾜｯｼｬ	10	A,C,E
6	135C3-12071		RETAINER	ﾘﾃｰﾅ	1	A,C,E
7	135C3-12081		BEARING	ﾍﾞｱﾘﾝｸﾞ	1	A,C,E
8	135C3-42041		SUPPORT	ｻﾎﾟｰﾄ	1	A,C,E
9	01103-08025		BOLT	ﾎﾞﾙﾄ	4	A,C,E
10	02011-00008		WASHER	ﾜｯｼｬ	4	A,C,E
11	124T3-12201		ARM	ｱｰﾑ	1	A,C,E
12	124T3-12071		YOKE	ﾖｰｸ	1	A,C,E
13	12003-12021		BUSHING	ﾌﾞｯｼﾝｸﾞ	1	A,C,E
14	124T3-12261		BUSHING	ﾌﾞｯｼﾝｸﾞ	1	A,C,E
15	02000-00024		WASHER	ﾜｯｼｬ	1	A,C,E
16	135C3-12031		NOZZLE	ﾉｽﾞﾙ	1	A,C,E:1-107
-	124T3-12031		NOZZLE	ﾉｽﾞﾙ	1	A,C,E:108-
17	22655-42261		NIPPLE	ﾆｯﾌﾟﾙ	1	A,C,E
18	124T3-12161		CLAMP	ｸﾗﾝﾌﾟ	1	A,C,E
19	01184-08012		BOLT	ﾎﾞﾙﾄ	1	A,C,E
20	124T3-12013		COVER	ｶﾊﾞｰ	1	A,C,E:1-559
-	135C3-12201		COVER	ｶﾊﾞｰ	1	A,C,E:560-
21	124T3-12022		GASKET	ｶﾞｽｹｯﾄ	1	A,C,E
22	24611-02181		BOLT	ﾎﾞﾙﾄ	22	A,C,E:1-142
-	235C1-02251		BOLT	ﾎﾞﾙﾄ	22	A,C,E:143-
23	01103-10070		BOLT	ﾎﾞﾙﾄ	2	A,C,E
24	01103-10030		BOLT	ﾎﾞﾙﾄ	7	A,C,E
25	01103-10035		BOLT	ﾎﾞﾙﾄ	2	A,C,E
26	01103-12045		BOLT	ﾎﾞﾙﾄ	4	A,C,E
27	01103-12070		BOLT	ﾎﾞﾙﾄ	1	A,C,E
28	02011-00010		WASHER	ﾜｯｼｬ	11	A,C,E
29	02011-00012		WASHER	ﾜｯｼｬ	5	A,C,E
30	02212-10020		PIN	ﾋﾟﾝ	2	A,C,E
31	124U3-82521		STRAINER	ｽﾄﾚｰﾅ	1	A,C,E
32	135C3-42051		COVER	ｶﾊﾞｰ	1	A,C,E
33	124U3-82091		GASKET	ｶﾞｽｹｯﾄ	1	A,C,E
34	04100-00406		NIPPLE	ﾆｯﾌﾟﾙ	1	A,C,E:1-382
-	25277-82012		NIPPLE	ﾆｯﾌﾟﾙ	1	A,C,E:383-
35	01186-10025		BOLT	ﾎﾞﾙﾄ	4	A,C,E
36	04012-00404		ELBOW	ｴﾙﾎﾞ	1	A,C,E:108-
37	115G3-82111		O-RING	Oﾘﾝｸﾞ	1	A,C,E:108-
38	135C3-42011		CAP	ｷｬｯﾌﾟ	1	A,C,E
39	23870-52821		PLUG	ﾌﾟﾗｸﾞ	1	A,C,E:108-
40	135C3-12011		O-RING	Oﾘﾝｸﾞ	1	A,C,E:108-
41	115G3-82651		SEAL,OIL	ｼｰﾙ	1	A,C,E:108-
42	15573-42151		BREATHER	ﾌﾞﾘｰｻﾞ	1	A,C,E:108-

FIG.43 DRIVE UNIT (1/3) (C-TYPE)

(F4042530) ﾄﾞﾗｲﾌﾞﾕﾆｯﾄ(1/3)

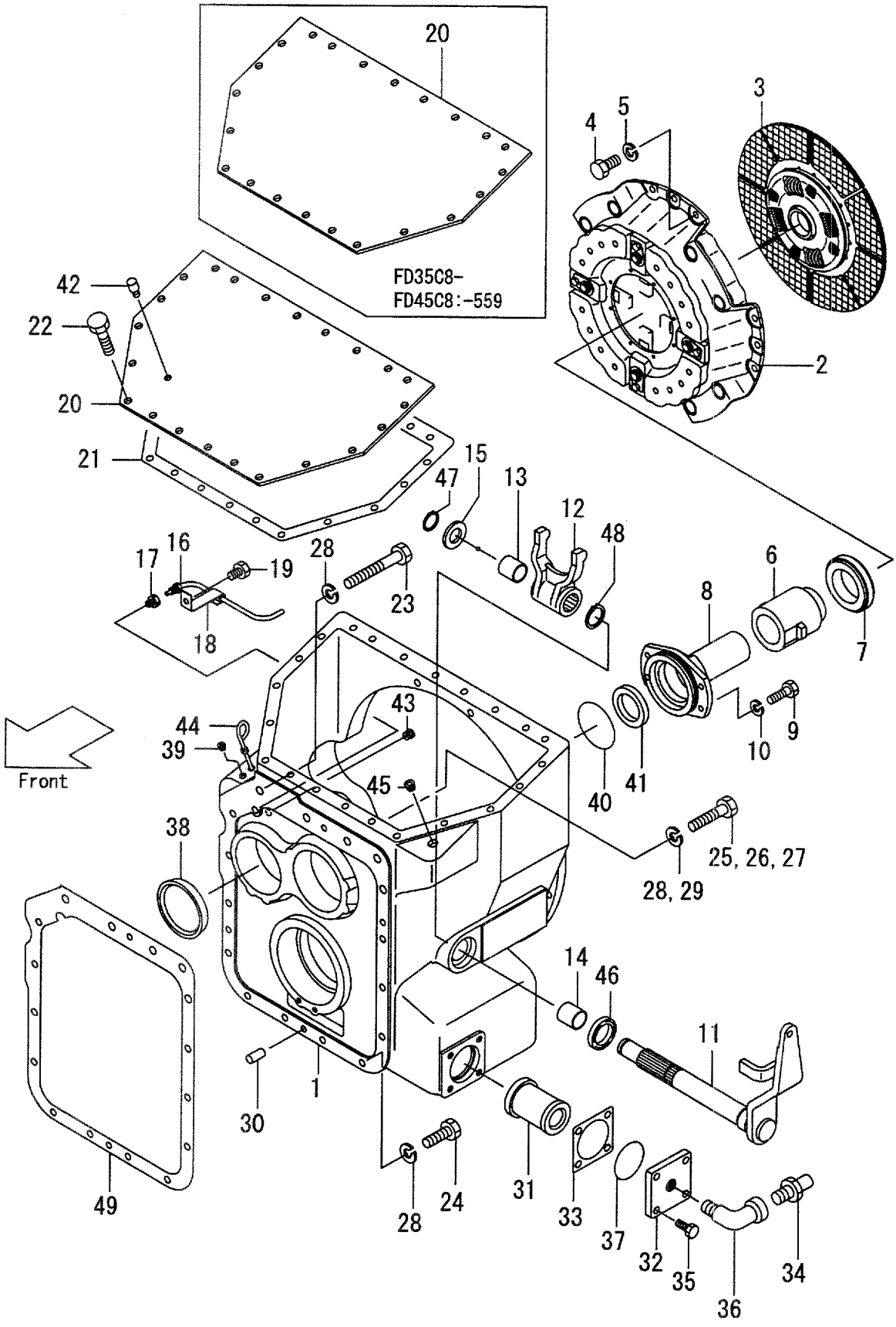

A:FD35C8 D:FD40T8 G:FD50T8 K:FG45T8
B:FD35T8 E:FD45C8 H:FG35T8 L:FG50T8
C:FD40C8 F:FD45T8 J:FG40T8

FIG.43
(F4042530)

Item No	Part No.	Mark	Description		Req'd	Remarks : Serial No.
43	135C3-12111		PLUG	ﾌﾟﾗｸﾞ	1	A,C,E:108-
44	124T3-43051		GAUGE,LEVEL	ｹﾞｰｼﾞ	1	A,C,E
45	12163-82541		PLUG	ﾌﾟﾗｸﾞ	1	A,C,E
46	124T3-12251	*	SEAL,OIL	ｼｰﾙ	1	A,C,E
47	02100-00025	*	RING,SNAP	ｽﾅｯﾌﾟﾘﾝｸﾞ	1	A,C,E
48	02100-00030	*	RING,SNAP	ｽﾅｯﾌﾟﾘﾝｸﾞ	1	A,C,E
49	124T3-42192	*	GASKET	ｶﾞｽｹｯﾄ	1	A,C,E
K1	124T3-40402		KIT,REPAIR	ﾘﾍﾟｱｷｯﾄ	1	A,C,E
						INC.46-49 & FIG.44:25-33
						& FIG.45:9,19-22,42-45

FIG.44 DRIVE UNIT (2/3) (C-TYPE)

(F4042540) ﾄﾞﾗｲﾌﾞﾕﾆｯﾄ(2/3)

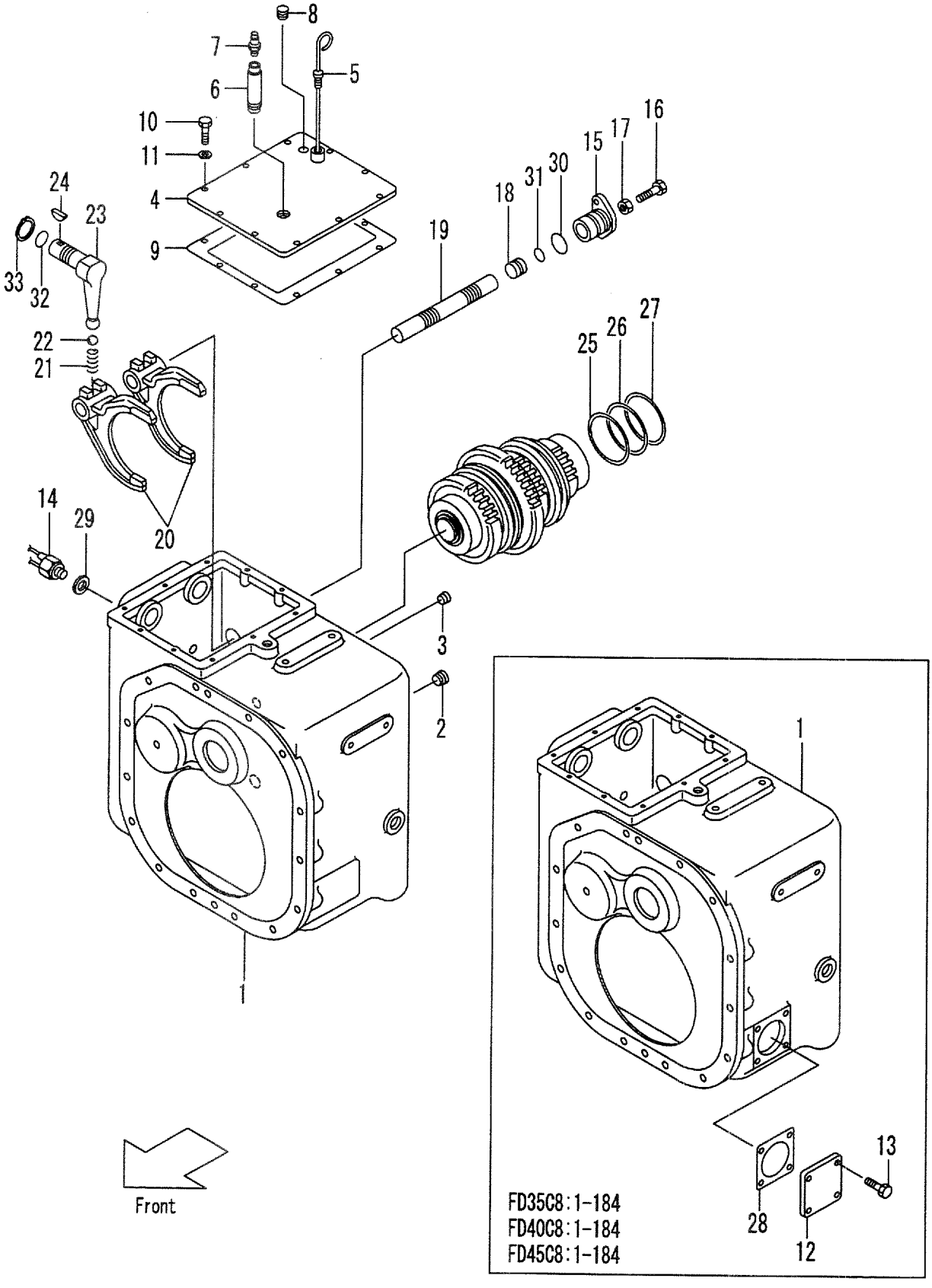

A:FD35C8 D:FD40T8 G:FD50T8 K:FG45T8
B:FD35T8 E:FD45C8 H:FG35T8 L:FG50T8
C:FD40C8 F:FD45T8 J:FG40T8

FIG.44
(F4042540)

Item No	Part No.	Mark	Description		Req'd	Remarks : Serial No.
1	124T3-42202		CASE	ｹｰｽ	1	A,C,E:1-184
-	135C3-42101		CASE	ｹｰｽ	1	A,C,E:185-
2	27397-52101		PLUG	ﾌﾟﾗｸﾞ	1	A,C,E
3	12163-82541		PLUG	ﾌﾟﾗｸﾞ	1	A,C,E
4	124T3-42531		COVER	ｶﾊﾞｰ	1	A,C,E
5	124T3-43051		LEVEL,GAUGE,OIL	ﾚﾍﾞﾙ	1	A,C,E
6	19502-52501		PIPE,BREATHER	ﾊﾟｲﾌﾟ	1	A,C,E
7	15573-42151		BREATHER,AIR	ﾌﾞﾘｰｻﾞ	1	A,C,E
8	12163-82541		PLUG	ﾌﾟﾗｸﾞ	1	A,C,E
9	124T3-42241		GASKET	ｶﾞｽｹｯﾄ	1	A,C,E
10	01103-08020		BOLT	ﾎﾞﾙﾄ	12	A,C,E
11	02011-00008		WASHER	ﾜｯｼｬ	12	A,C,E
12	135C3-42061		COVER	ｶﾊﾞｰ	1	A,C,E:1-184
13	01186-10025		BOLT	ﾎﾞﾙﾄ	4	A,C,E:1-184
14	12003-42451		SWITCH,BACK-LAMP	ｽｲｯﾁ	2	A,C,E
15	12003-42052		SUPPORT	ｻﾎﾟｰﾄ	1	A,C,E
16	01123-10045		BOLT	ﾎﾞﾙﾄ	1	A,C,E
17	01400-00010		NUT	ﾅｯﾄ	1	A,C,E
18	12003-42061		SPACER	ｽﾍﾟｰｻ	1	A,C,E
19	124T3-42161		ROD,SHIFT	ﾛｯﾄﾞ	1	A,C,E
20	124T3-42141		FORK,SHIFT	ﾌｫｰｸ	2	A,C,E
21	12003-42421		SPRING	ｽﾌﾟﾘﾝｸﾞ	2	A,C,E
22	03190-00013		BALL	ﾎﾞｰﾙ	2	A,C,E
23	124T3-42681		LEVER,SHIFT	ﾚﾊﾞｰ	2	A,C,E
24	02360-06022		KEY	ｷｰ	2	A,C,E
25	124T3-42471	*	SHIM	ｼﾑ	AR	A,C,E
26	124T3-43071	*	SHIM	ｼﾑ	AR	A,C,E
27	124T3-43081	*	SHIM	ｼﾑ	AR	A,C,E
28	124T3-42711	*	GASKET	ｶﾞｽｹｯﾄ	1	A,C,E:1-184
29	12003-42461	*	PACKING	ﾊﾟｯｷﾝｸﾞ	2	A,C,E
30	15583-82551	*	O-RING	Oﾘﾝｸﾞ	1	A,C,E
31	15583-82561	*	O-RING	Oﾘﾝｸﾞ	1	A,C,E
32	124T3-42721	*	O-RING	Oﾘﾝｸﾞ	2	A,C,E
33	02100-00032	*	RING,SNAP	ｽﾅｯﾌﾟﾘﾝｸﾞ	2	A,C,E

FIG.45 DRIVE UNIT (3/3) (C-TYPE)

(F4042550) ﾄﾞﾗｲﾌﾞﾕﾆｯﾄ(3/3)

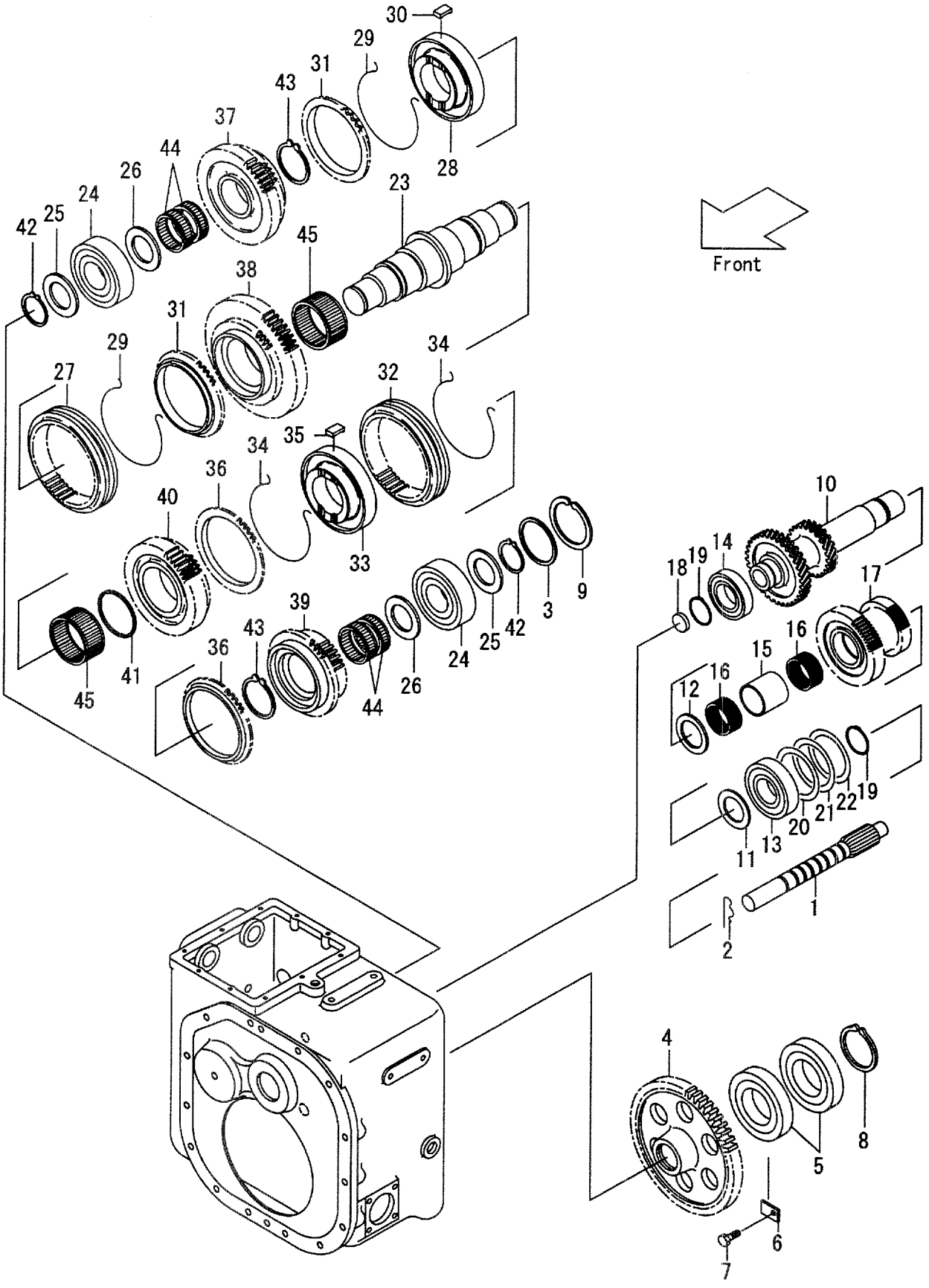

A:FD35C8 D:FD40T8 G:FD50T8 K:FG45T8
B:FD35T8 E:FD45C8 H:FG35T8 L:FG50T8
C:FD40C8 F:FD45T8 J:FG40T8

FIG.45
(F4042550)

Item No	Part No.	Mark	Description		Req'd	Remarks : Serial No.
1	135C3-12021		SHAFT,DRIVE	ｼｬﾌﾄ	1	A,C,E
2	124T3-42381		PIN	ﾋﾟﾝ	1	A,C,E
3	124T3-42501		COLLAR	ｶﾗｰ	1	A,C,E
4	124T3-42122		GEAR	ｷﾞｱｰ	1	A,C,E:1-110
-	124T3-42123		GEAR	ｷﾞｱｰ	1	A,C,E:111-
5	03000-06214		BEARING	ﾍﾞｱﾘﾝｸﾞ	2	A,C,E
6	124T3-43041		PLATE	ﾌﾟﾚｰﾄ	2	A,C,E
7	01103-08016		BOLT	ﾎﾞﾙﾄ	2	A,C,E
8	02100-00070		RING,SNAP	ｽﾅｯﾌﾟﾘﾝｸﾞ	1	A,C,E
9	02110-00090	*	RING,SNAP	ｽﾅｯﾌﾟﾘﾝｸﾞ	1	A,C,E
10	135C3-42001		SHAFT	ｼｬﾌﾄ	1	A,C,E
11	124T3-42031		PLATE,THRUST	ﾌﾟﾚｰﾄ	1	A,C,E
12	124T3-42181		PLATE,THRUST	ﾌﾟﾚｰﾄ	1	A,C,E
13	124T3-42301		BEARING	ﾍﾞｱﾘﾝｸﾞ	1	A,C,E
14	124T3-42761		BEARING	ﾍﾞｱﾘﾝｸﾞ	1	A,C,E
15	124T3-42731		SPACER	ｽﾍﾟｰｻ	1	A,C,E
16	124T3-42311		BEARING	ﾍﾞｱﾘﾝｸﾞ	2	A,C,E
17	124T3-42011		GEAR	ｷﾞｱｰ	1	A,C,E
18	135C3-42021		CAP	ｷｬｯﾌﾟ	1	A,C,E
19	02100-00045	*	RING,SNAP	ｽﾅｯﾌﾟﾘﾝｸﾞ	2	A,C,E
20	124T3-42481	*	SHIM,T-0.1	ｼﾑ	AR	A,C,E
21	124T3-43091	*	SHIM,T-0.2	ｼﾑ	AR	A,C,E
22	124T3-43101	*	SHIM,T-0.5	ｼﾑ	AR	A,C,E
23	124T3-42051		SHAFT	ｼｬﾌﾄ	1	A,C,E
24	124T3-42751		BEARING	ﾍﾞｱﾘﾝｸﾞ	2	A,C,E
25	15913-42511		SPACER	ｽﾍﾟｰｻ	2	A,C,E
26	124T3-43001		PLATE	ﾌﾟﾚｰﾄ	2	A,C,E
A1	124T3-40351		SYNCHRONIZER-ASSY	ｼﾝｸﾛﾅｲｻﾞｱｯｾﾝ	1	A,C,E
						INC.27-30
27	NO PART NO.	#	SLEEVE	ｽﾘｰﾌﾞ	1	A,C,E
28	NO PART NO.	#	HUB	ﾊﾌﾞ	1	A,C,E
29	124T3-42431		SPRING	ｽﾌﾟﾘﾝｸﾞ	2	A,C,E
30	15573-42011		INSERT	ｲﾝｻｰﾄ	3	A,C,E
31	124T3-42421		RING	ﾘﾝｸﾞ	2	A,C,E
A2	124T3-40351		SYNCHRONIZER-ASSY	ｼﾝｸﾛﾅｲｻﾞｱｯｾﾝ	1	A,C,E
						INC.32-35
32	NO PART NO.	#	SLEEVE	ｽﾘｰﾌﾞ	1	A,C,E
33	NO PART NO.	#	HUB	ﾊﾌﾞ	1	A,C,E
34	124T3-42431		SPRING	ｽﾌﾟﾘﾝｸﾞ	2	A,C,E
35	15573-42011		INSERT	ｲﾝｻｰﾄ	3	A,C,E
36	124T3-42421		RING	ﾘﾝｸﾞ	2	A,C,E
37	124T3-42081		GEAR,HIGH	ｷﾞｱｰ	1	A,C,E
38	124T3-42091		GEAR,LOW	ｷﾞｱｰ	1	A,C,E
39	124T3-42111		GEAR,FORWARD	ｷﾞｱｰ	1	A,C,E
40	124T3-42101		GEAR,REVERSE	ｷﾞｱｰ	1	A,C,E
41	124T3-42491		COLLAR	ｶﾗｰ	1	A,C,E
42	02100-00040	*	RING,SNAP	ｽﾅｯﾌﾟﾘﾝｸﾞ	2	A,C,E
43	02100-00055	*	RING,SNAP	ｽﾅｯﾌﾟﾘﾝｸﾞ	2	A,C,E
44	124T3-43021	*	BEARING	ﾍﾞｱﾘﾝｸﾞ	4	A,C,E
45	124T3-42331	*	BEARING	ﾍﾞｱﾘﾝｸﾞ	2	A,C,E

FIG.46 DRIVE UNIT (1/2) (T-TYPE)

(F4042560) ﾄﾞﾗｲﾌﾞﾕﾆｯﾄ(1/2)

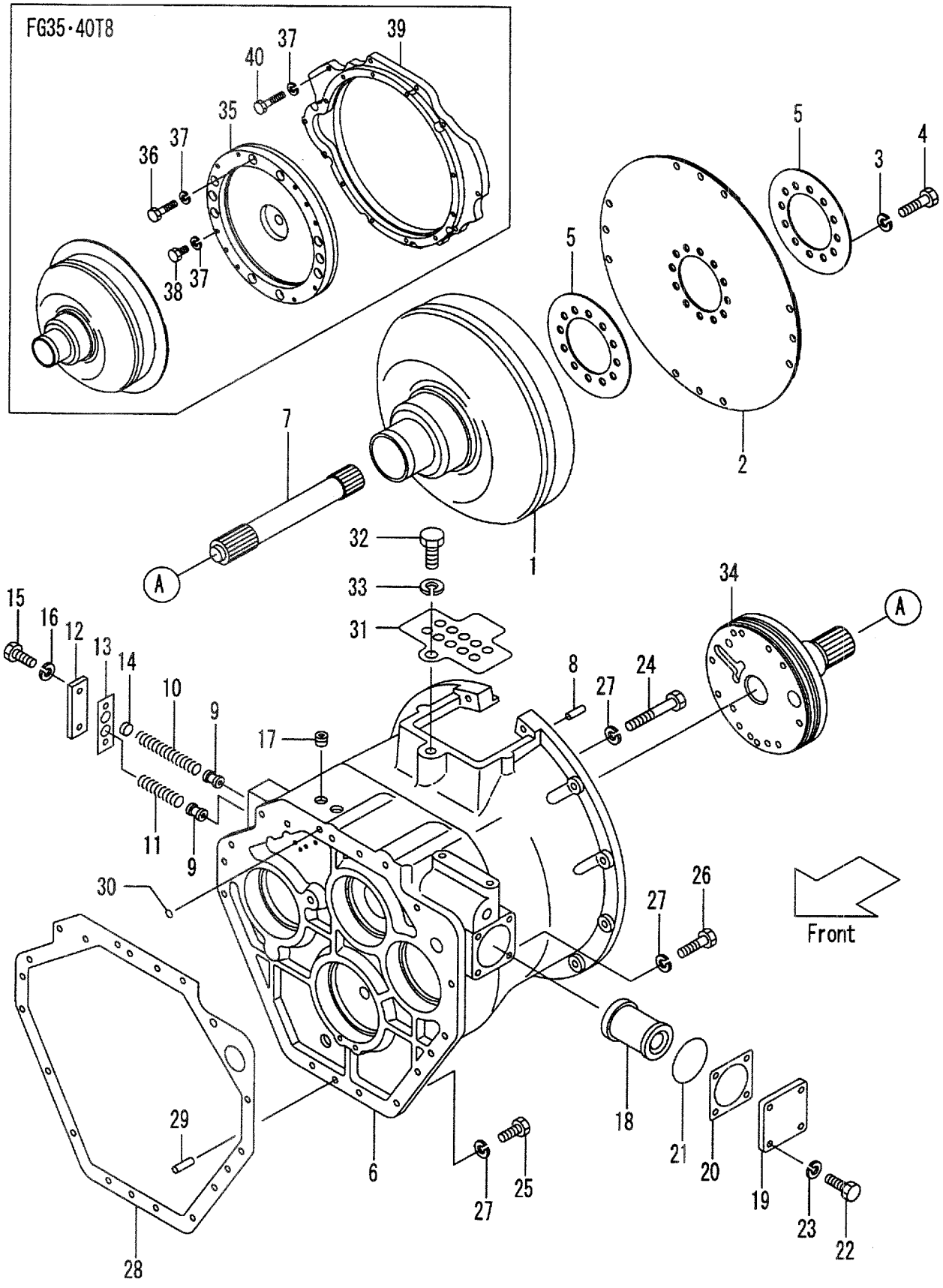

A:FD35C8 D:FD40T8 G:FD50T8 K:FG45T8
B:FD35T8 E:FD45C8 H:FG35T8 L:FG50T8
C:FD40C8 F:FD45T8 J:FG40T8

FIG.46
(F4042560)

Item No	Part No.	Mark	Description		Req'd	Remarks : Serial No.
A1	135E2-50001		UNIT-ASSY,DRIVE	ﾄﾞﾗｲﾌﾞﾕﾆｯﾄｱｯｾﾝ	1	B,D INC.1-30 & FIG.47
-	135L2-50001		UNIT-ASSY,DRIVE	ﾄﾞﾗｲﾌﾞﾕﾆｯﾄｱｯｾﾝ	1	H,J INC.1-30 & FIG.47
-	135E2-50051		UNIT-ASSY,DRIVE	ﾄﾞﾗｲﾌﾞﾕﾆｯﾄｱｯｾﾝ	1	B,D [MDK] INC.1-30 & FIG.47
-	135L2-50051		UNIT-ASSY,DRIVE	ﾄﾞﾗｲﾌﾞﾕﾆｯﾄｱｯｾﾝ	1	H,J [MDK] INC.1-30 & FIG.47
-	535E3-80001		UNIT-ASSY,DRIVE	ﾄﾞﾗｲﾌﾞﾕﾆｯﾄｱｯｾﾝ	1	B,D:692- [EXE][EXN] INC.1-30 & FIG.47
-	535L3-80001		UNIT-ASSY,DRIVE	ﾄﾞﾗｲﾌﾞﾕﾆｯﾄｱｯｾﾝ	1	H,J:172- [EXE][EXN] INC.1-30 & FIG.47
A2	135E3-80101		CIRCUIT-ASSY,TOR-CON	ｻｰｷｯﾄｱｯｾﾝ	1	B,D:1-1252 H,J:1-243 INC.1-5
-	135E3-80102		CIRCUIT-ASSY,TOR-CON	ｻｰｷｯﾄｱｯｾﾝ	1	B,D:1253- H,J:244- INC.1-5
1	BK-6B11500000		CIRCUIT,TOR-CON	ｻｰｷｯﾄ	1	B,D,H,J
2	BK-6A09100001		PLATE,INPUT	ﾌﾟﾚｰﾄ	1	B,D,H,J
3	BK-6500220000		WASHER	ﾜｯｼｬ	8	B,D,H,J
4	BK-8051112010		BOLT	ﾎﾞﾙﾄ	8	B,D,H,J
5	BK-6540100400		WASHER	ﾜｯｼｬ	2	B,D,H,J
6	124U3-82501		CASE	ｹｰｽ	1	B,D,H,J
7	124U3-82041		SHAFT	ｼｬﾌﾄ	1	B,D,H,J
8	124U3-82431		PIN	ﾋﾟﾝ	2	B,D,H,J
9	15943-82271		PISTON	ﾋﾟｽﾄﾝ	2	B,D,H,J
10	15943-82281		SPRING	ｽﾌﾟﾘﾝｸﾞ	1	B,D,H,J
11	15943-82291		SPRING	ｽﾌﾟﾘﾝｸﾞ	1	B,D:1-102
-	135E3-82081		SPRING	ｽﾌﾟﾘﾝｸﾞ	1	B,D:103-
-	135E3-82081		SPRING	ｽﾌﾟﾘﾝｸﾞ	1	H,J
12	15943-82301		COVER	ｶﾊﾞｰ	1	B,D,H,J
13	15943-82311	*	GASKET	ｶﾞｽｹｯﾄ	1	B,D,H,J
14	124U3-82541		SPACER	ｽﾍﾟｰｻ	1	B,D:1-102
15	01103-10025		BOLT	ﾎﾞﾙﾄ	2	B,D,H,J
16	02011-00010		WASHER	ﾜｯｼｬ	2	B,D,H,J
17	24329-45541		PLUG	ﾌﾟﾗｸﾞ	2	B,D,H,J
18	124U3-82521		STRAINER	ｽﾄﾚｰﾅ	1	B,D,H,J
19	124U3-82081		COVER	ｶﾊﾞｰ	1	B,D,H,J
20	124U3-82091	*	GASKET	ｶﾞｽｹｯﾄ	1	B,D,H,J
21	115G3-82111		O-RING	Oﾘﾝｸﾞ	1	B,D,H,J
22	01103-10020		BOLT	ﾎﾞﾙﾄ	4	B,D,H,J
23	02011-00010		WASHER	ﾜｯｼｬ	4	B,D,H,J
24	01103-10095		BOLT	ﾎﾞﾙﾄ	3	B,D,H,J
25	01103-10030		BOLT	ﾎﾞﾙﾄ	10	B,D,H,J
26	01103-10070		BOLT	ﾎﾞﾙﾄ	2	B,D,H,J
27	02011-00010		WASHER	ﾜｯｼｬ	15	B,D,H,J
28	124U3-82101	*	GASKET	ｶﾞｽｹｯﾄ	1	B,D,H,J

FIG.46 DRIVE UNIT (1/2) (T-TYPE)

(F4042560) ﾄﾞﾗｲﾌﾞﾕﾆｯﾄ(1/2)

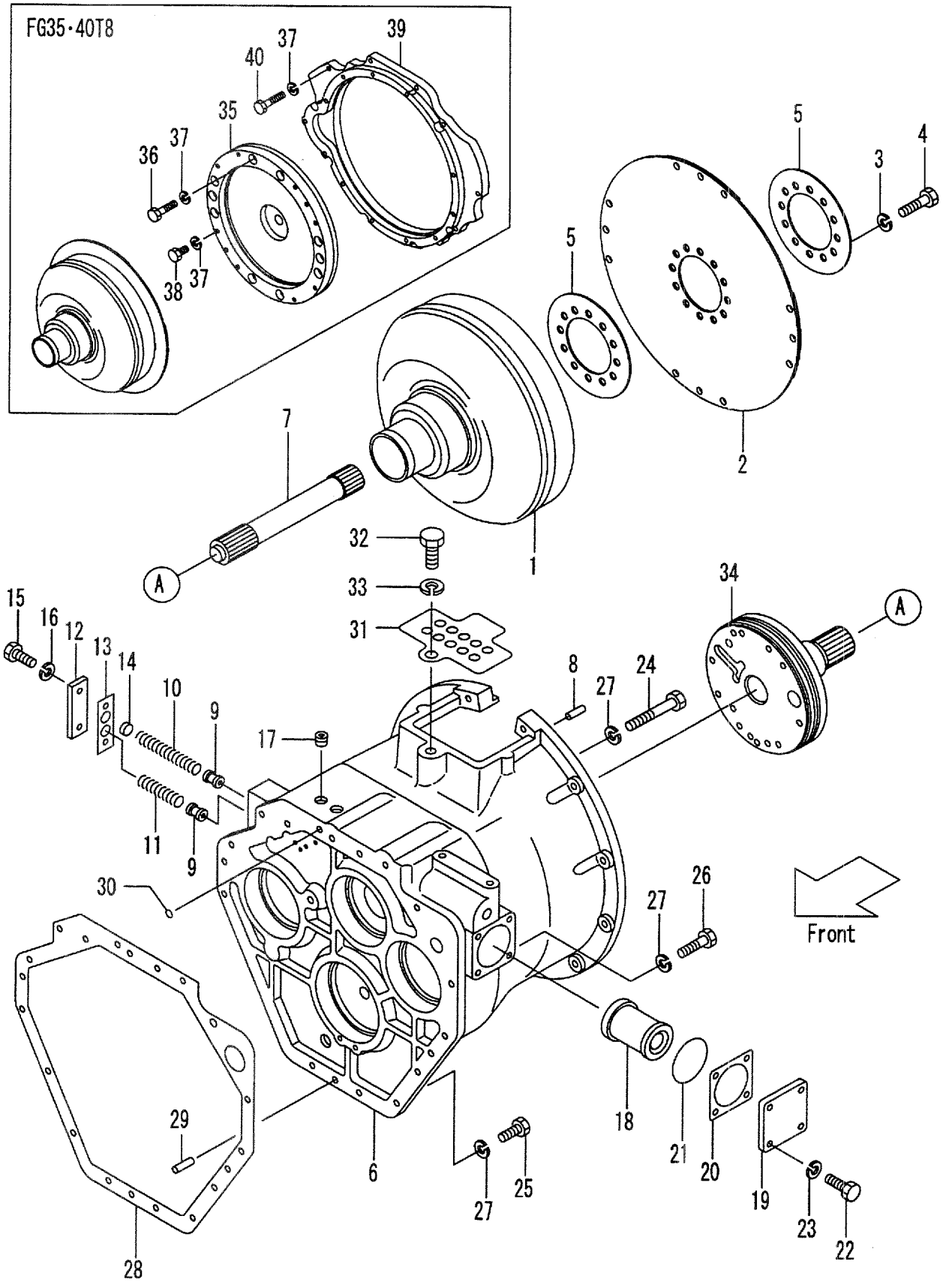

A:FD35C8 D:FD40T8 G:FD50T8 K:FG45T8
B:FD35T8 E:FD45C8 H:FG35T8 L:FG50T8
C:FD40C8 F:FD45T8 J:FG40T8

FIG.46
(F4042560)

Item No	Part No.	Mark	Description		Req'd	Remarks : Serial No.
29	02212-10020		PIN	ﾋﾟﾝ	2	B,D,H,J
30	15583-82521	*	O-RING	Oﾘﾝｸﾞ	1	B,D,H,J
31	124U3-82311		COVER	ｶﾊﾞｰ	1	B,D,H,J
32	01111-16025		BOLT	ﾎﾞﾙﾄ	1	B,D,H,J
33	02011-00016		WASHER	ﾜｯｼｬ	1	B,D,H,J
34	124U3-80221		PUMP,CHARGING	ﾎﾟﾝﾌﾟ	1	B,D,H,J
						SEE FIG.56
35	223W2-50111		PIECE,DISTANCE	ﾋﾟｰｽ	1	H,J:1-238
-	235L2-52101		PIECE,DISTANCE	ﾋﾟｰｽ	1	H,J:239-
36	01116-10040		BOLT	ﾎﾞﾙﾄ	10	H,J
37	02011-00010		WASHER	ﾜｯｼｬ	42	H,J
38	01116-10020		BOLT	ﾎﾞﾙﾄ	10	H,J
39	235L2-50201		HOUSING	ﾊｳｼﾞﾝｸﾞ	1	H,J
40	01116-10045		BOLT	ﾎﾞﾙﾄ	22	H,J
K1	124U3-80401		KIT,REPAIR	ﾘﾍﾟｱｷｯﾄ	1	B,D,H,J
						INC.9,16,24,26 &
						FIG.47:6-8

FIG.47 DRIVE UNIT (2/2) (T-TYPE)

(F4042570) ﾄﾞﾗｲﾌﾞﾕﾆｯﾄ(2/2)

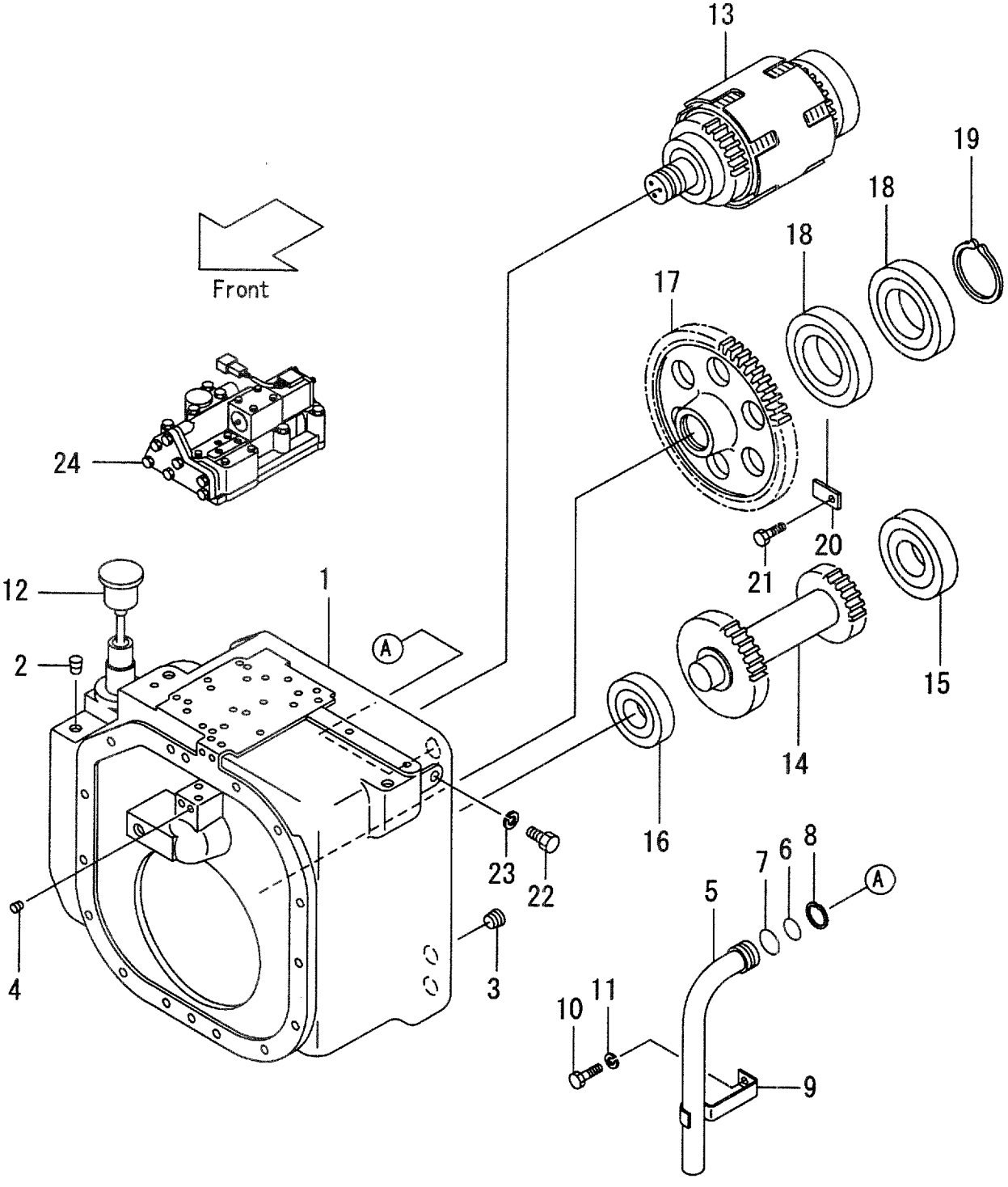

A:FD35C8 D:FD40T8 G:FD50T8 K:FG45T8
B:FD35T8 E:FD45C8 H:FG35T8 L:FG50T8
C:FD40C8 F:FD45T8 J:FG40T8

FIG.47
(F4042570)

Item No	Part No.	Mark	Description		Req'd	Remarks : Serial No.
1	135E3-80161		CASE	ｹｰｽ	1	B,D,H,J
2	24329-45541		PLUG	ﾌﾟﾗｸﾞ	2	B,D,H,J
3	27397-52101		PLUG	ﾌﾟﾗｸﾞ	2	B,D,H,J
4	23870-52871		PLUG	ﾌﾟﾗｸﾞ	8	B,D,H,J
5	124U3-82201		PIPE	ﾊﾟｲﾌﾟ	1	B,D,H,J
6	124U3-82411	*	O-RING	Oﾘﾝｸﾞ	1	B,D,H,J
7	124U3-82421	*	O-RING	Oﾘﾝｸﾞ	1	B,D,H,J
8	02100-00035	*	RING,SNAP	ｽﾅｯﾌﾟﾘﾝｸﾞ	1	B,D,H,J
9	124U3-82211		CLAMP	ｸﾗﾝﾌﾟ	1	B,D,H,J
10	01103-08012		BOLT	ﾎﾞﾙﾄ	1	B,D,H,J
11	02011-00008		WASHER	ﾜｯｼｬ	1	B,D,H,J
12	12163-82232		CAP	ｷｬｯﾌﾟ	1	B,D,H,J
13	124U3-80251		PACK,CLUTCH	ﾊﾟｯｸ	1	B,D,H,J
						SEE FIG.51
-	135E3-80301		PACK,CLUTCH	ﾊﾟｯｸ	1	B,D,H,J
						[MDK]SEE FIG.51
14	124U3-82271		GEAR,COUNTER	ｷﾞﾔｰ	1	B,D:1-445
						H,J:1-147
-	124U3-82272		GEAR,COUNTER	ｷﾞﾔｰ	1	B,D:446-
						H,J:148-
15	03000-06310		BEARING	ﾍﾞｱﾘﾝｸﾞ	1	B,D,H,J
16	03000-06308		BEARING	ﾍﾞｱﾘﾝｸﾞ	1	B,D,H,J
17	124T3-42122		GEAR,OUTPUT	ｷﾞﾔｰ	1	B,D:1-110
						H,J:1-104
-	124T3-42123		GEAR,OUTPUT	ｷﾞﾔｰ	1	B,D:111-
						H,J:105-
18	03000-06214		BEARING	ﾍﾞｱﾘﾝｸﾞ	2	B,D,H,J
19	02100-00070		RING,SNAP	ｽﾅｯﾌﾟﾘﾝｸﾞ	1	B,D,H,J
20	124T3-43041		PLATE	ﾌﾟﾚｰﾄ	2	B,D,H,J
21	01103-08016		BOLT	ﾎﾞﾙﾄ	2	B,D,H,J
22	124T3-42651		BOLT	ﾎﾞﾙﾄ	1	B,D,H,J
23	124T3-42661		WASHER	ﾜｯｼｬ	1	B,D,H,J
24	135E3-80201		VALVE,CONTROL	ﾊﾞﾙﾌﾞ	1	B,D
						SEE FIG.54
-	135L3-80201		VALVE,CONTROL	ﾊﾞﾙﾌﾞ	1	H,J
						SEE FIG.54
25	16402-54331	+	SENSOR	ｾﾝｻ	1	B,D:692-
						H,J:172-
						[EXE][EXN]

FIG.48 DRIVE UNIT (1/2) (T-TYPE)

(F4042580) ﾄﾞﾗｲﾌﾞﾕﾆｯﾄ(1/2)

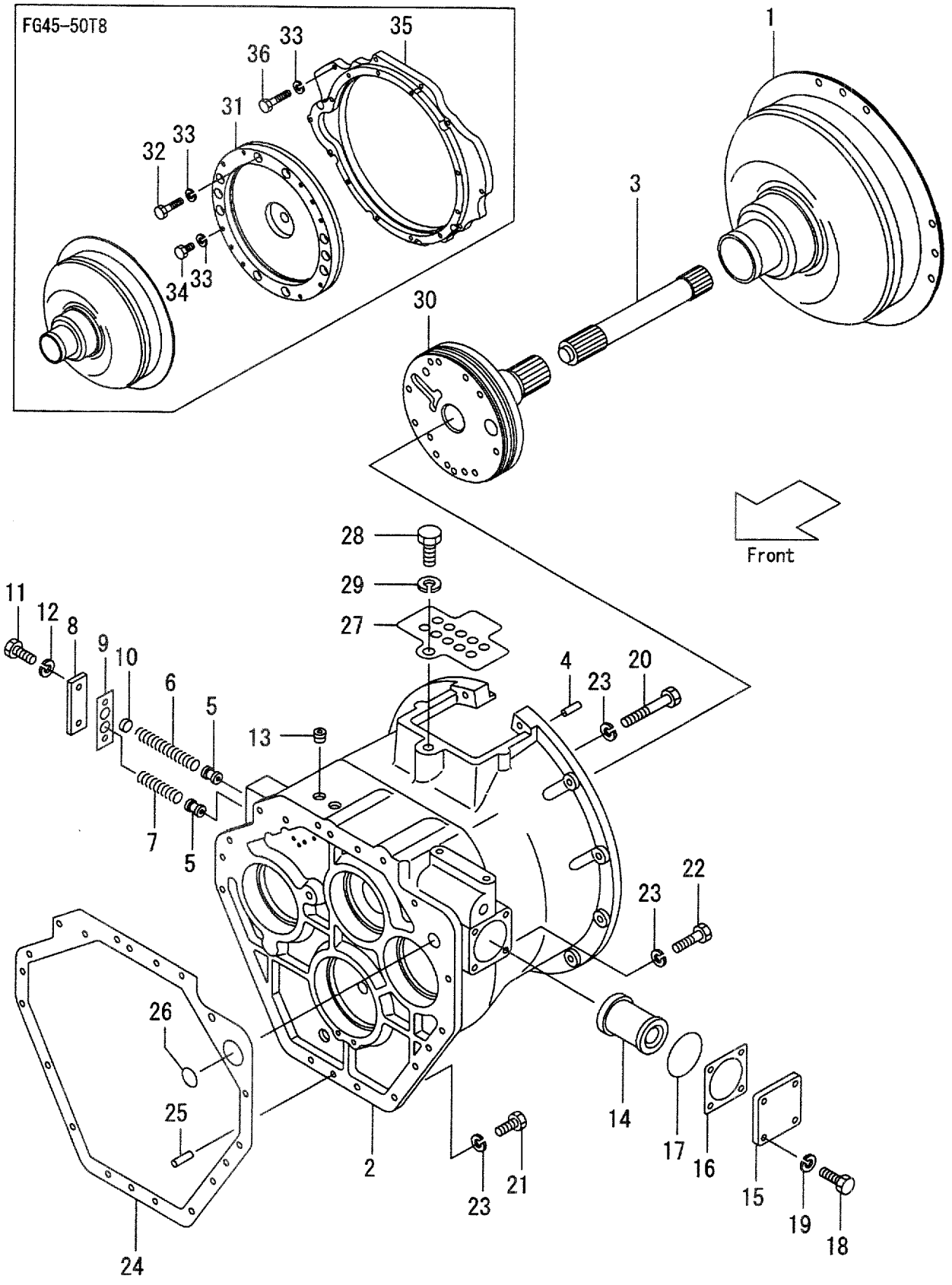

A:FD35C8 D:FD40T8 G:FD50T8 K:FG45T8
B:FD35T8 E:FD45C8 H:FG35T8 L:FG50T8
C:FD40C8 F:FD45T8 J:FG40T8

FIG.48
(F4042580)

Item No	Part No.	Mark	Description		Req'd	Remarks : Serial No.
A1	135H2-50001		UNIT-ASSY,DRIVE	ﾄﾞﾗｲﾌﾞﾕﾆｯﾄｱｯｾﾝ	1	F,G INC.1-30 & FIG.49
-	135N2-50001		UNIT-ASSY,DRIVE	ﾄﾞﾗｲﾌﾞﾕﾆｯﾄｱｯｾﾝ	1	K,L INC.1-30 & FIG.49
-	135H2-50051		UNIT-ASSY,DRIVE	ﾄﾞﾗｲﾌﾞﾕﾆｯﾄｱｯｾﾝ	1	F,G [MDK] INC.1-30 & FIG.49
-	135N2-50051		UNIT-ASSY,DRIVE	ﾄﾞﾗｲﾌﾞﾕﾆｯﾄｱｯｾﾝ	1	K,L [MDK] INC.1-30 & FIG.49
A2	135H3-80121		TOR-CON-SUB-ASSY	ﾄﾙｺﾝｻﾌﾞｱｯｾﾝ	1	F,G,K,L INC.1-30
1	135E3-80101		CIRCUIT,TOR-CON	ｻｰｷｯﾄ	1	F,G,K,L
2	128E3-82002		CASE	ｹｰｽ	1	F,G,K,L
3	124U3-82041		SHAFT	ｼｬﾌﾄ	1	F,G,K,L
4	124U3-82431		PIN	ﾋﾟﾝ	2	F,G,K,L
5	15943-82271		PISTON	ﾋﾟｽﾄﾝ	2	F,G,K,L
6	15943-82281		SPRING	ｽﾌﾟﾘﾝｸﾞ	1	F,G,K,L
7	15943-82291		SPRING	ｽﾌﾟﾘﾝｸﾞ	1	F:1-102 L:101-101
-	135E3-82081		SPRING	ｽﾌﾟﾘﾝｸﾞ	1	F:103- L:102-
-	135E3-82081		SPRING	ｽﾌﾟﾘﾝｸﾞ	1	G,K
8	15943-82301		COVER	ｶﾊﾞｰ	1	F,G,K,L
9	15943-82311		GASKET	ｶﾞｽｹｯﾄ	1	F,G,K,L
10	124U3-82541		SPACER	ｽﾍﾟｰｻ	1	F:1-102 L:101-101
11	01103-10025		BOLT	ﾎﾞﾙﾄ	2	F,G,K,L
12	02011-00010		WASHER	ﾜｯｼｬ	2	F,G,K,L
13	24329-45541		PLUG	ﾌﾟﾗｸﾞ	2	F,G,K,L
14	124U3-82521		STRAINER	ｽﾄﾚｰﾅ	1	F,G,K,L
15	124U3-82081		COVER	ｶﾊﾞｰ	1	F,G,K,L
16	124U3-82091		GASKET	ｶﾞｽｹｯﾄ	1	F,G,K,L
17	115G3-82111		O-RING	Oﾘﾝｸﾞ	1	F,G,K,L
18	01103-10020		BOLT	ﾎﾞﾙﾄ	4	F,G,K,L
19	02011-00010		WASHER	ﾜｯｼｬ	4	F,G,K,L
20	01103-10095		BOLT	ﾎﾞﾙﾄ	3	F,G,K,L
21	01103-10030		BOLT	ﾎﾞﾙﾄ	10	F,G,K,L
22	01103-10070		BOLT	ﾎﾞﾙﾄ	2	F,G,K,L
23	02011-00010		WASHER	ﾜｯｼｬ	15	F,G,K,L
24	124U3-82101		GASKET	ｶﾞｽｹｯﾄ	1	F,G,K,L
25	02212-10020		PIN	ﾋﾟﾝ	2	F,G,K,L
26	15583-82521		O-RING	Oﾘﾝｸﾞ	1	F,G,K,L
27	124U3-82311		COVER	ｶﾊﾞｰ	1	F,G,K,L
28	01111-16025		BOLT	ﾎﾞﾙﾄ	1	F,G,K,L
29	02011-00016		WASHER	ﾜｯｼｬ	1	F,G,K,L
30	124U3-80221		PUMP,CHARGING	ﾎﾟﾝﾌﾟ	1	F,G,K,L SEE FIG.56
31	223W2-50111		PIECE,DISTANCE	ﾋﾟｰｽ	1	K:1-238 L:1-111
-	235L2-52101		PIECE,DISTANCE	ﾋﾟｰｽ	1	K:239- L:112-

FIG.48 DRIVE UNIT (1/2) (T-TYPE)

(F4042580) ﾄﾞﾗｲﾌﾞﾕﾆｯﾄ(1/2)

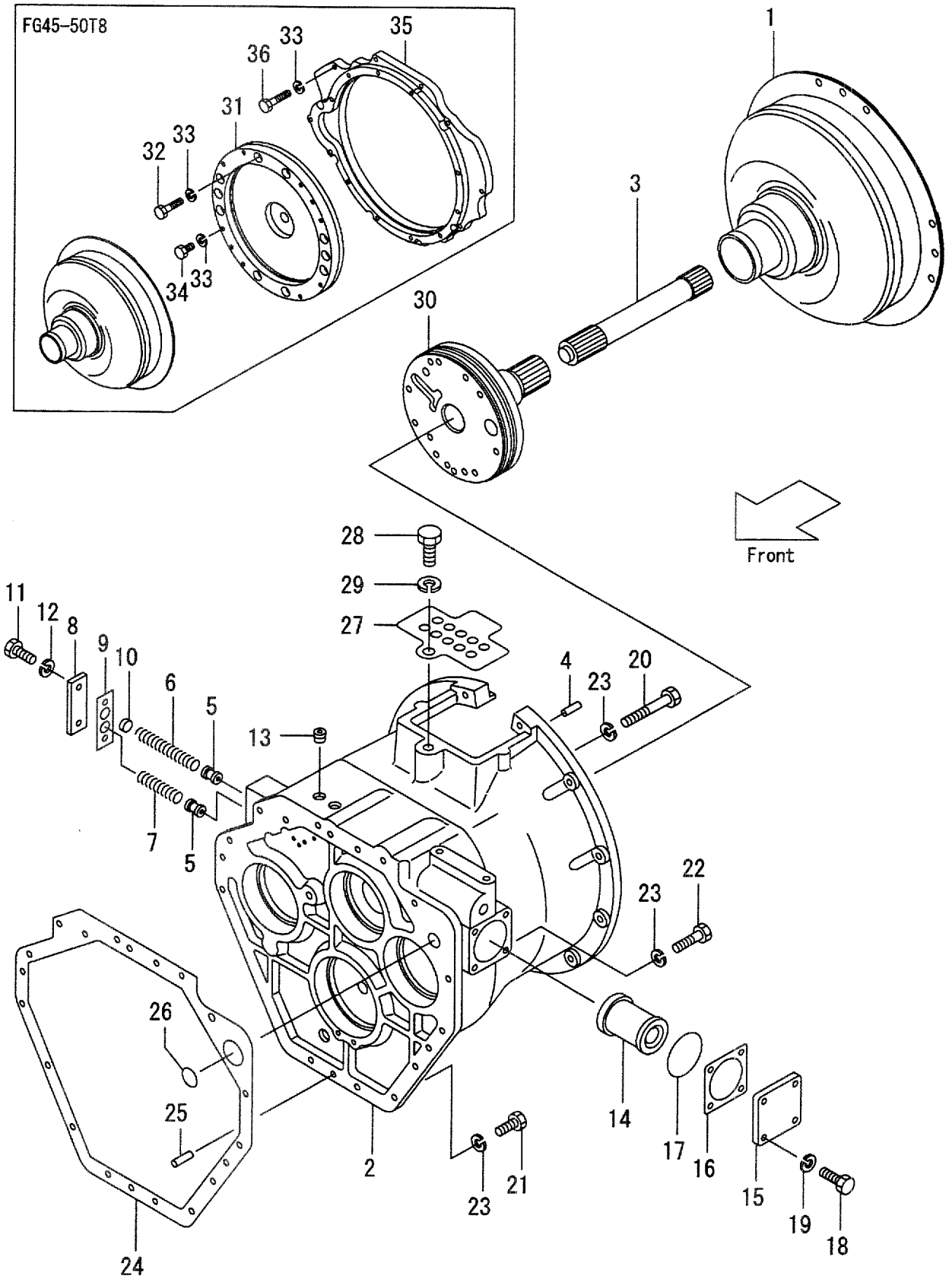

A:FD35C8 D:FD40T8 G:FD50T8 K:FG45T8
B:FD35T8 E:FD45C8 H:FG35T8 L:FG50T8
C:FD40C8 F:FD45T8 J:FG40T8

FIG.48
(F4042580)

Item No	Part No.	Mark	Description		Req'd	Remarks : Serial No.
32	01116-10040		BOLT	ﾎﾞﾙﾄ	10	K,L
33	02011-00010		WASHER	ﾜｯｼｬ	42	K,L
34	01116-10020		BOLT	ﾎﾞﾙﾄ	10	K,L
35	235L2-50201		HOUSING	ﾊｳｼﾞﾝｸﾞ	1	K,L
36	01116-10045		BOLT	ﾎﾞﾙﾄ	22	K,L

FIG.49 DRIVE UNIT (2/2) (T-TYPE)

(F4042590) ﾄﾞﾗｲﾌﾞﾕﾆｯﾄ(2/2)

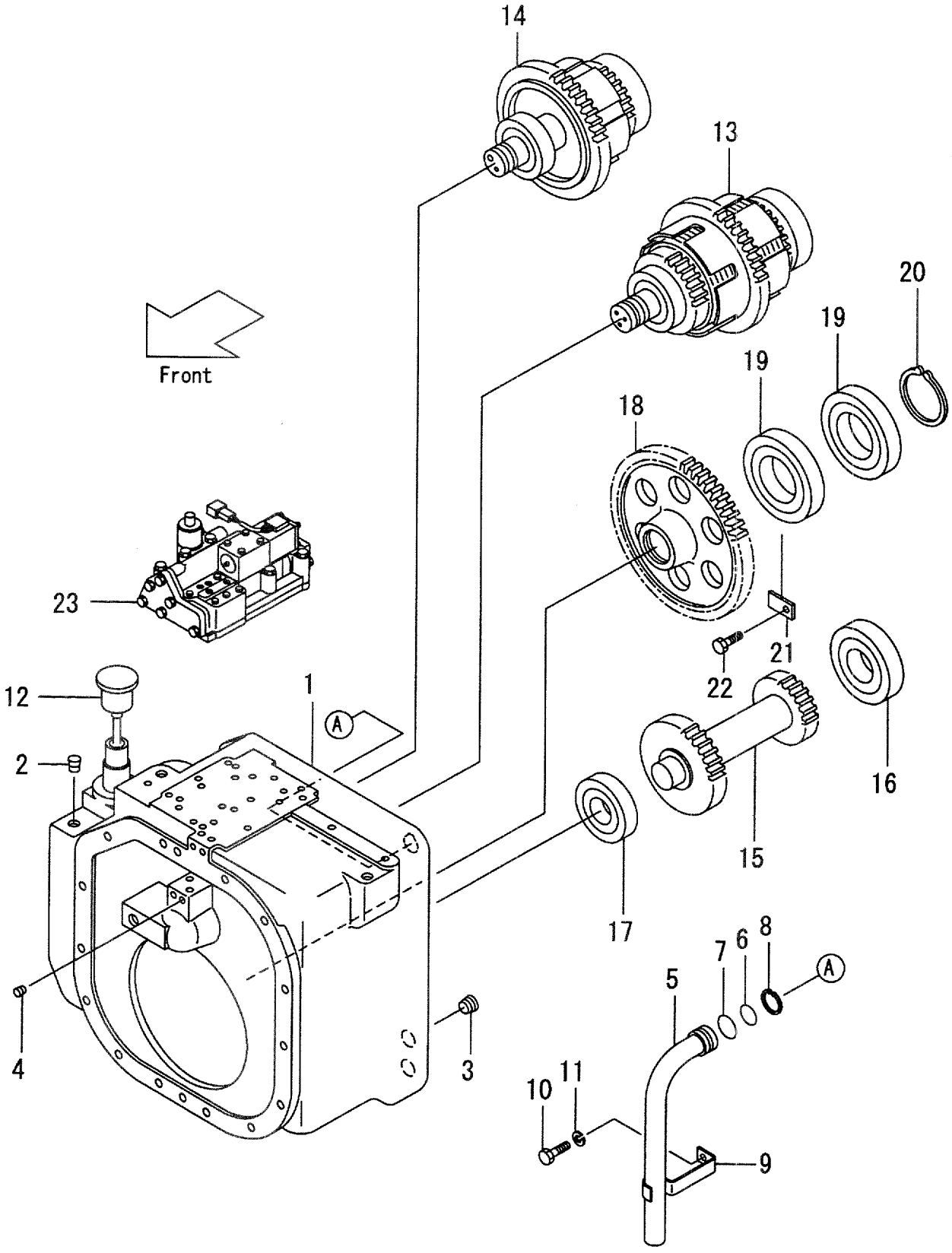

A:FD35C8 D:FD40T8 G:FD50T8 K:FG45T8
B:FD35T8 E:FD45C8 H:FG35T8 L:FG50T8
C:FD40C8 F:FD45T8 J:FG40T8

FIG.49
(F4042590)

Item No	Part No.	Mark	Description		Req'd	Remarks : Serial No.
1	135H3-80161		CASE	ｹｰｽ	1	F,G,K,L
2	24329-45541		PLUG	ﾌﾟﾗｸﾞ	4	F,G,K,L
3	27397-52101		PLUG	ﾌﾟﾗｸﾞ	2	F,G,K,L
4	23870-52871		PLUG	ﾌﾟﾗｸﾞ	12	F,G,K,L
5	124U3-82201		PIPE	ﾊﾟｲﾌﾟ	1	F,G,K,L
6	124U3-82411		O-RING	Oﾘﾝｸﾞ	1	F,G,K,L
7	124U3-82421		O-RING	Oﾘﾝｸﾞ	1	F,G,K,L
8	02100-00035		RING,SNAP	ｽﾅｯﾌﾟﾘﾝｸﾞ	1	F,G,K,L
9	124U3-82211		CLAMP	ｸﾗﾝﾌﾟ	1	F,G,K,L
10	01103-08012		BOLT	ﾎﾞﾙﾄ	1	F,G,K,L
11	02011-00008		WASHER	ﾜｯｼｬ	1	F,G,K,L
12	12163-82232		CAP	ｷｬｯﾌﾟ	1	F,G,K,L
13	128E3-80231		PACK,CLUTCH	ﾊﾟｯｸ	1	F,G,K,L
						SEE FIG.52
-	135H3-80301		PACK,CLUTCH	ﾊﾟｯｸ	1	F,G,K,L
						[MDK]SEE FIG.52
14	128E3-80251		PACK,CLUTCH	ﾊﾟｯｸ	1	F,G,K,L
						SEE FIG.53
-	135H3-80311		PACK,CLUTCH	ﾊﾟｯｸ	1	F,G,K,L
						[MDK]SEE FIG.53
15	128E3-82021		GEAR,COUNTER	ｷﾞｱｰ	1	F,G,K,L
16	03000-06310		BEARING	ﾍﾞｱﾘﾝｸﾞ	1	F,G,K,L
17	03000-06308		BEARING	ﾍﾞｱﾘﾝｸﾞ	1	F,G,K,L
18	124T3-42122		GEAR,OUTPUT	ｷﾞｱｰ	1	F,G:1-110
						K,L:1-104
-	124T3-42123		GEAR,OUTPUT	ｷﾞｱｰ	1	F,G:111-
						K,L:105-
19	03000-06214		BEARING	ﾍﾞｱﾘﾝｸﾞ	2	F,G,K,L
20	02100-00070		RING,SNAP	ｽﾅｯﾌﾟﾘﾝｸﾞ	1	F,G,K,L
21	124T3-43041		PLATE	ﾌﾟﾚｰﾄ	2	F,G,K,L
22	01103-08016		BOLT	ﾎﾞﾙﾄ	2	F,G,K,L
23	135H3-80201		VALVE,CONTROL	ﾊﾞﾙﾌﾞ	1	F,G
						SEE FIG.55
-	135N3-80201		VALVE,CONTROL	ﾊﾞﾙﾌﾞ	1	K,L
						SEE FIG.55

FIG.50 MAIN SHAFT (C-TYPE)

(F40425A0) メインシャフト

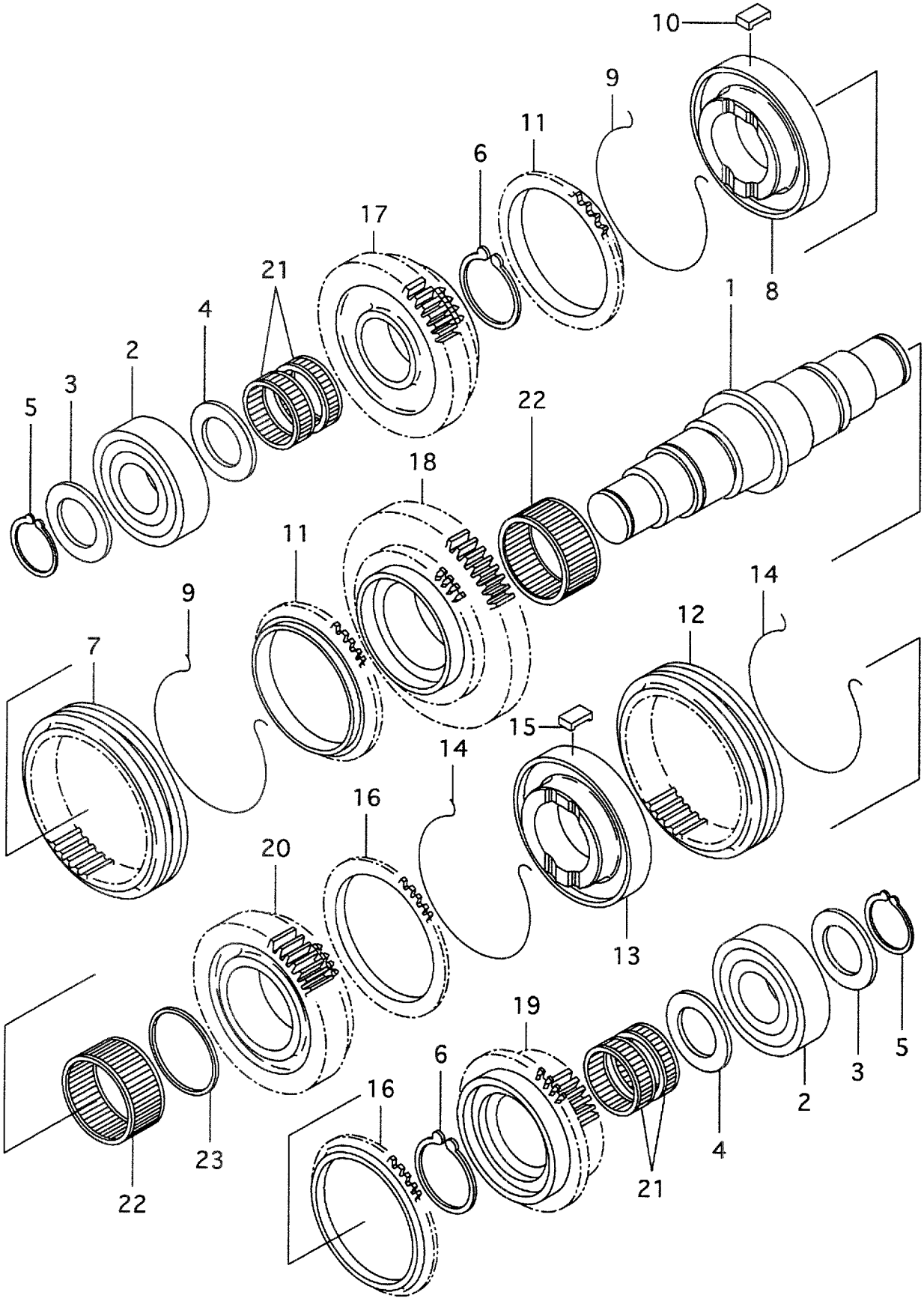

A:FD35C8 D:FD40T8 G:FD50T8 K:FG45T8
B:FD35T8 E:FD45C8 H:FG35T8 L:FG50T8
C:FD40C8 F:FD45T8 J:FG40T8

FIG.50
(F40425A0)

Item No	Part No.	Mark	Description		Req'd	Remarks : Serial No.
1	124T3-42051		SHAFT	ｼｬﾌﾄ	1	A,C,E
2	124T3-42751		BEARING	ﾍﾞｱﾘﾝｸﾞ	2	A,C,E
3	15913-42511		SPACER	ｽﾍﾟｰｻ	2	A,C,E
4	124T3-43001		PLATE	ﾌﾟﾚｰﾄ	2	A,C,E
5	02100-00040		RING,SNAP	ｽﾅｯﾌﾟﾘﾝｸﾞ	2	A,C,E
6	02100-00055		RING,SNAP	ｽﾅｯﾌﾟﾘﾝｸﾞ	2	A,C,E
A2	124T3-40351		SYNCHRONIZER-ASSY	ｼﾝｸﾛﾅｲｻﾞｱｯｾﾝ	1	A,C,E
						INC.7-10
7	NO PART NO.	#	SLEEVE	ｽﾘｰﾌﾞ	1	A,C,E
8	NO PART NO.	#	HUB	ﾊﾌﾞ	1	A,C,E
9	124T3-42431		SPRING	ｽﾌﾟﾘﾝｸﾞ	2	A,C,E
10	15573-42011		INSERT	ｲﾝｻｰﾄ	3	A,C,E
11	124T3-42421		RING	ﾘﾝｸﾞ	2	A,C,E
A3	124T3-40351		SYNCHRONIZER-ASSY	ｼﾝｸﾛﾅｲｻﾞｱｯｾﾝ	1	A,C,E
						INC.12-15
12	NO PART NO.	#	SLEEVE	ｽﾘｰﾌﾞ	1	A,C,E
13	NO PART NO.	#	HUB	ﾊﾌﾞ	1	A,C,E
14	124T3-42431		SPRING	ｽﾌﾟﾘﾝｸﾞ	2	A,C,E
15	15573-42011		INSERT	ｲﾝｻｰﾄ	3	A,C,E
16	124T3-42421		RING	ﾘﾝｸﾞ	2	A,C,E
17	124T3-42081		GEAR,HIGH	ｷﾞﾔｰ	1	A,C,E
18	124T3-42091		GEAR,LOW	ｷﾞﾔｰ	1	A,C,E
19	124T3-42111		GEAR,FORWARD	ｷﾞﾔｰ	1	A,C,E
20	124T3-42101		GEAR,REVERSE	ｷﾞﾔｰ	1	A,C,E
21	124T3-43021		BEARING	ﾍﾞｱﾘﾝｸﾞ	4	A,C,E
22	124T3-42331		BEARING	ﾍﾞｱﾘﾝｸﾞ	2	A,C,E
23	124T3-42491		COLLAR	ｶﾗｰ	1	A,C,E

FIG.51 CLUTCH PAC (T-TYPE)

(F40425B0) クラッチパック

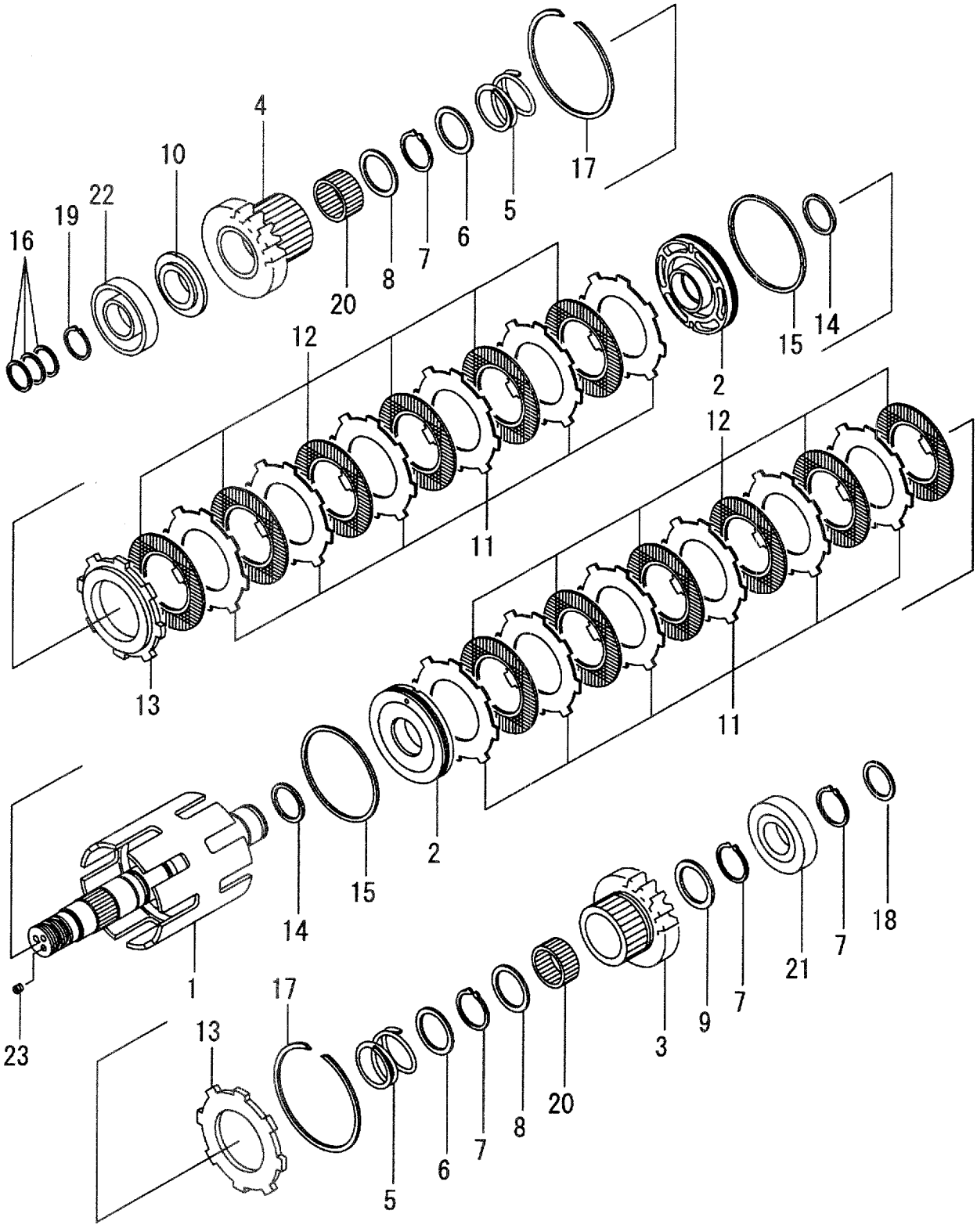

A:FD35C8 D:FD40T8 G:FD50T8 K:FG45T8
B:FD35T8 E:FD45C8 H:FG35T8 L:FG50T8
C:FD40C8 F:FD45T8 J:FG40T8

FIG.51
(F40425B0)

Item No	Part No.	Mark	Description		Req'd	Remarks : Serial No.
A1	124U3-80251		PAC-ASSY,CLUTCH	ﾊﾟｯｸｱｯｾﾝ	1	B,D,H,J INC.1-23
-	135E3-80301		PAC-ASSY,CLUTCH	ﾊﾟｯｸｱｯｾﾝ	1	B,D,H,J [MDK] INC.1-23
1	124U3-80261		SHAFT	ｼｬﾌﾄ	1	B,D,H,J
2	15943-80261		PISTON	ﾋﾟｽﾄﾝ	2	B,D,H,J
3	124U3-82021		GEAR,FORWARD	ｷﾞｬｰ	1	B,D,H,J
4	124U3-82011		GEAR,REVERSE	ｷﾞｬｰ	1	B,D,H,J
5	15943-82391		SPRING	ｽﾌﾟﾘﾝｸﾞ	2	B,D,H,J
6	15943-82401		SEAT	ｼｰﾄ	2	B,D,H,J
7	22678-22501	*	RING,SNAP	ｽﾅｯﾌﾟﾘﾝｸﾞ	4	B,D,H,J
8	15943-82411		PLATE,A	ﾌﾟﾚｰﾄ	2	B,D,H,J
9	15943-82421		PLATE,B	ﾌﾟﾚｰﾄ	1	B,D,H,J
10	15943-82431		PLATE,C	ﾌﾟﾚｰﾄ	1	B,D,H,J
11	124U3-82361	*	PLATE	ﾌﾟﾚｰﾄ	12	B,D,H,J
-	135E3-82201	*	PLATE	ﾌﾟﾚｰﾄ	12	B,D,H,J [MDK]
12	124U3-82351	*	PLATE	ﾌﾟﾚｰﾄ	12	B,D,H,J
-	125Y3-82101	*	PLATE	ﾌﾟﾚｰﾄ	12	B,D,H,J [MDK]
13	15943-82471		PLATE	ﾌﾟﾚｰﾄ	2	B,D,H,J
14	15943-82481	*	RING,A	ﾘﾝｸﾞ	2	B,D,H,J
15	15943-82491	*	RING,B	ﾘﾝｸﾞ	2	B,D,H,J
16	15943-82501	*	RING,C	ﾘﾝｸﾞ	3	B,D,H,J
17	15943-82511	*	RING,SNAP	ｽﾅｯﾌﾟﾘﾝｸﾞ	2	B,D,H,J
18	124U3-82261	*	RING	ﾘﾝｸﾞ	1	B,D,H,J
19	02100-00040	*	RING,SNAP	ｽﾅｯﾌﾟﾘﾝｸﾞ	1	B,D,H,J
20	124U3-82251	*	BEARING	ﾍﾞｱﾘﾝｸﾞ	2	B,D,H,J
21	03000-06310		BEARING	ﾍﾞｱﾘﾝｸﾞ	1	B,D,H,J
22	03000-06308		BEARING	ﾍﾞｱﾘﾝｸﾞ	1	B,D,H,J
23	23870-52871		PLUG	ﾌﾟﾗｸﾞ	2	B,D,H,J
K1	124U3-80461		KIT,REPAIR	ﾘﾍﾟｱｷｯﾄ	1	B,D,H,J INC.7,14-20
K2	124U3-82242		KIT,PLATE	ﾌﾟﾚｰﾄｷｯﾄ	2	B,D,H,J INC.11,12
-	135E3-82191		KIT,PLATE	ﾌﾟﾚｰﾄｷｯﾄ	2	B,D,H,J [MDK] INC.11,12

FIG.52 CLUTCH PAC (FIRST)(T-TYPE)

(F40425C0) クラッチパック

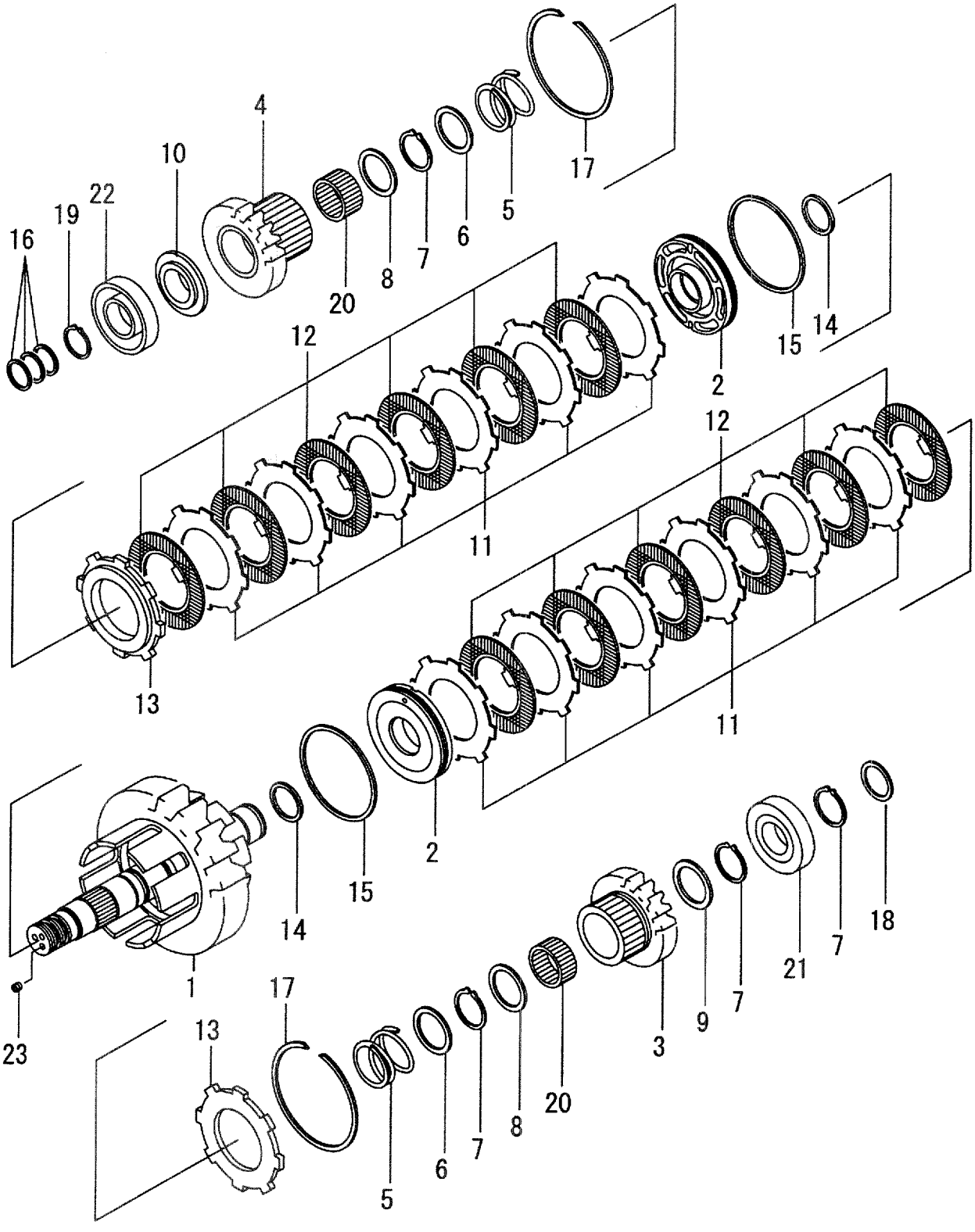

A:FD35C8 D:FD40T8 G:FD50T8 K:FG45T8
B:FD35T8 E:FD45C8 H:FG35T8 L:FG50T8
C:FD40C8 F:FD45T8 J:FG40T8

FIG.52
(F40425C0)

Item No	Part No.	Mark	Description		Req'd	Remarks : Serial No.
A1	128E3-80231		PAC-ASSY,CLUTCH	ﾊﾟｯｸｱｯｾﾝ	1	F,G,K,L INC.1-23
-	135H3-80301		PAC-ASSY,CLUTCH	ﾊﾟｯｸｱｯｾﾝ	1	F,G,K,L [MDK] INC.1-23
1	128E3-80241		SHAFT	ｼｬﾌﾄ	1	F,G,K,L
2	15943-80261		PISTON	ﾋﾟｽﾄﾝ	2	F,G,K,L
3	128E3-82061		GEAR,FORWARD	ｷﾞｱｰ	1	F,G,K,L
4	124U3-82011		GEAR,REVERSE	ｷﾞｱｰ	1	F,G,K,L
5	15943-82391		SPRING	ｽﾌﾟﾘﾝｸﾞ	2	F,G,K,L
6	15943-82401		SEAT	ｼｰﾄ	2	F,G,K,L
7	22678-22501	*	RING,SNAP	ｽﾅｯﾌﾟﾘﾝｸﾞ	4	F,G,K,L
8	15943-82411		PLATE,A	ﾌﾟﾚｰﾄ	2	F,G,K,L
9	15943-82421		PLATE,B	ﾌﾟﾚｰﾄ	1	F,G,K,L
10	15943-82431		PLATE,C	ﾌﾟﾚｰﾄ	1	F,G,K,L
11	124U3-82361	*	PLATE	ﾌﾟﾚｰﾄ	12	F,G,K,L
-	135E3-82201	*	PLATE	ﾌﾟﾚｰﾄ	12	F,G,K,L [MDK]
12	124U3-82351	*	PLATE	ﾌﾟﾚｰﾄ	12	F,G,K,L
-	125Y3-82101	*	PLATE	ﾌﾟﾚｰﾄ	12	F,G,K,L [MDK]
13	15943-82471		PLATE	ﾌﾟﾚｰﾄ	2	F,G,K,L
14	15943-82481	*	RING,A	ﾘﾝｸﾞ	2	F,G,K,L
15	15943-82491	*	RING,B	ﾘﾝｸﾞ	2	F,G,K,L
16	15943-82501	*	RING,C	ﾘﾝｸﾞ	3	F,G,K,L
17	15943-82511	*	RING,SNAP	ｽﾅｯﾌﾟﾘﾝｸﾞ	2	F,G,K,L
18	124U3-82261	*	RING	ﾘﾝｸﾞ	1	F,G,K,L
19	02100-00040	*	RING,SNAP	ｽﾅｯﾌﾟﾘﾝｸﾞ	1	F,G,K,L
20	124U3-82251	*	BEARING	ﾍﾞｱﾘﾝｸﾞ	2	F,G,K,L
21	03000-06310		BEARING	ﾍﾞｱﾘﾝｸﾞ	1	F,G,K,L
22	03000-06308		BEARING	ﾍﾞｱﾘﾝｸﾞ	1	F,G,K,L
23	23870-52871		PLUG	ﾌﾟﾗｸﾞ	2	F,G,K,L
K1	124U3-80461		KIT,REPAIR	ﾘﾍﾟｱｷｯﾄ	1	F,G,K,L INC.7,14-20
K2	124U3-82242		KIT,PLATE	ﾌﾟﾚｰﾄｷｯﾄ	2	F,G,K,L INC.11,12
-	135E3-82191		KIT,PLATE	ﾌﾟﾚｰﾄｷｯﾄ	2	F,G,K,L [MDK] INC.11,12

FIG.53 CLUTCH PAC (SECOND)(T-TYPE)

(F40425D0) クラッチパック

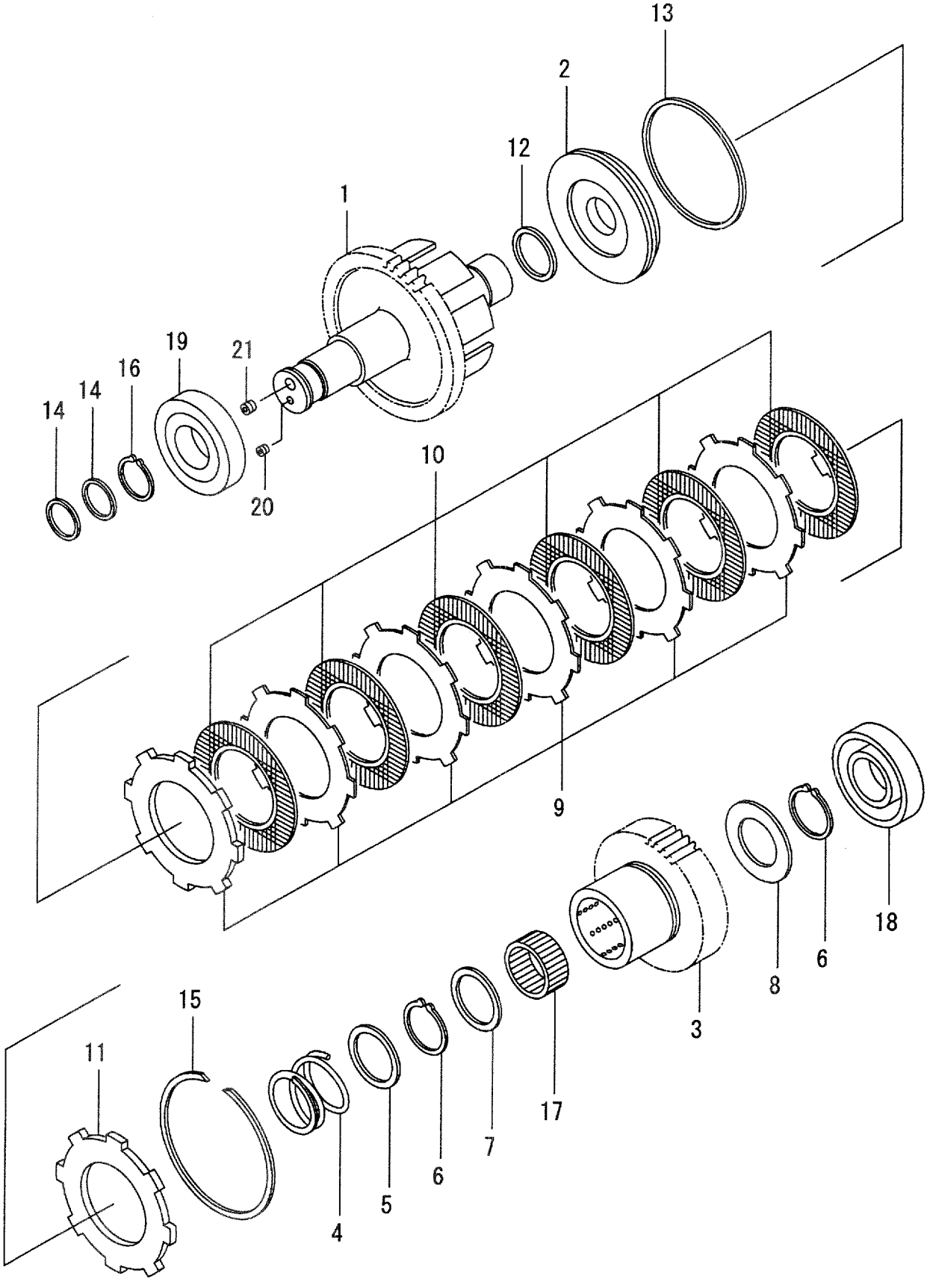

A:FD35C8 D:FD40T8 G:FD50T8 K:FG45T8
B:FD35T8 E:FD45C8 H:FG35T8 L:FG50T8
C:FD40C8 F:FD45T8 J:FG40T8

FIG.53
(F40425D0)

Item No	Part No.	Mark	Description		Req'd	Remarks : Serial No.
A1	128E3-80251		PAC-ASSY,CLUTCH	ﾊﾟｯｸｱｯｾﾝ	1	F,G,K,L INC.1-21
-	135H3-80311		PAC-ASSY,CLUTCH	ﾊﾟｯｸｱｯｾﾝ	1	F,G,K,L [MDK] INC.1-21
1	128E3-80261		SHAFT	ｼｬﾌﾄ	1	F,G,K,L
2	15943-80261		PISTON	ﾋﾟｽﾄﾝ	1	F,G,K,L
3	128E3-82101		GEAR,FORWARD	ｷﾞﾔｰ	1	F,G,K,L
4	15943-82391		SPRING	ｽﾌﾟﾘﾝｸﾞ	1	F,G,K,L
5	15943-82401		SEAT	ｼｰﾄ	1	F,G,K,L
6	22678-22501	*	RING,SNAP	ｽﾅｯﾌﾟﾘﾝｸﾞ	2	F,G,K,L
7	15943-82411		PLATE,A	ﾌﾟﾚｰﾄ	1	F,G,K,L
8	15943-82421		PLATE,B	ﾌﾟﾚｰﾄ	1	F,G,K,L
9	124U3-82361	*	PLATE	ﾌﾟﾚｰﾄ	6	F,G,K,L
-	135E3-82201	*	PLATE	ﾌﾟﾚｰﾄ	6	F,G,K,L [MDK]
10	124U3-82351	*	PLATE	ﾌﾟﾚｰﾄ	6	F,G,K,L
-	125Y3-82101	*	PLATE	ﾌﾟﾚｰﾄ	6	F,G,K,L [MDK]
11	15943-82471		PLATE	ﾌﾟﾚｰﾄ	1	F,G,K,L
12	15943-82481	*	RING,A	ﾘﾝｸﾞ	1	F,G,K,L
13	15943-82491	*	RING,B	ﾘﾝｸﾞ	1	F,G,K,L
14	15943-82501	*	RING,C	ﾘﾝｸﾞ	2	F,G,K,L
15	15943-82511	*	RING,SNAP	ｽﾅｯﾌﾟﾘﾝｸﾞ	1	F,G,K,L
16	02100-00040	*	RING,SNAP	ｽﾅｯﾌﾟﾘﾝｸﾞ	1	F,G,K,L
17	124U3-82251	*	BEARING	ﾍﾞｱﾘﾝｸﾞ	2	F,G,K,L
18	03000-06310		BEARING	ﾍﾞｱﾘﾝｸﾞ	1	F,G,K,L
19	03000-06308		BEARING	ﾍﾞｱﾘﾝｸﾞ	1	F,G,K,L
20	23870-52871		PLUG	ﾌﾟﾗｸﾞ	1	F,G,K,L
21	128E3-82191		PLUG	ﾌﾟﾗｸﾞ	1	F,G,K,L
K1	128E3-80441		KIT,REPAIR	ﾘﾍﾟｱｷｯﾄ	1	F,G,K,L INC.6,12-17
K2	124U3-82242		KIT,PLATE	ﾌﾟﾚｰﾄｷｯﾄ	1	F,G,K,L INC.9,10
-	135E3-82191		KIT,PLATE	ﾌﾟﾚｰﾄｷｯﾄ	1	F,G,K,L [MDK] INC.9,10

FIG.54 CONTROL VALVE (T-TYPE)

(F40425E0) コントロールバルブ

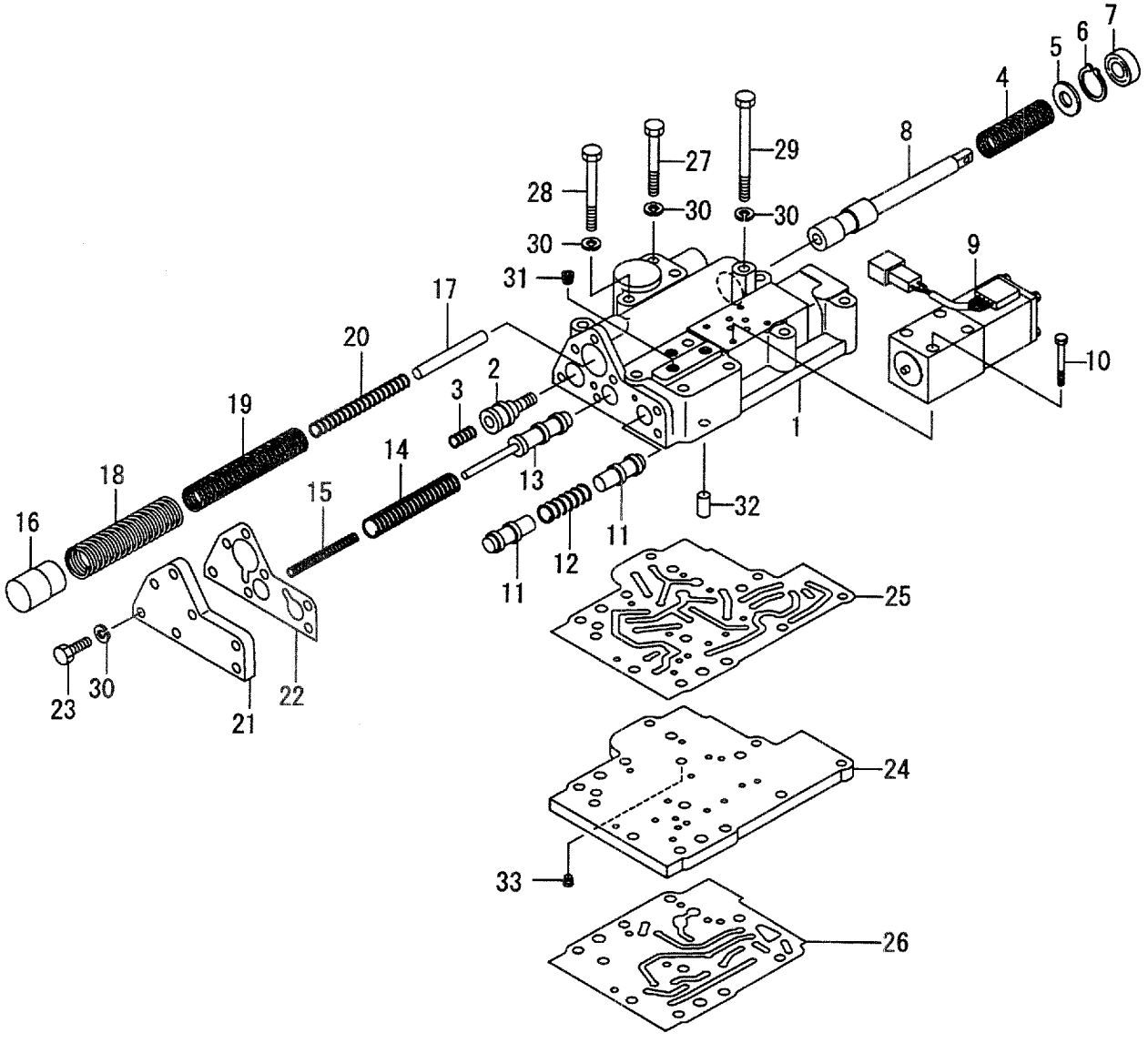

A:FD35C8 D:FD40T8 G:FD50T8 K:FG45T8
B:FD35T8 E:FD45C8 H:FG35T8 L:FG50T8
C:FD40C8 F:FD45T8 J:FG40T8

FIG.54
(F40425E0)

Item No	Part No.	Mark	Description		Req'd	Remarks : Serial No.
A1	135E3-80201		VALVE-ASSY	ﾊﾞﾙﾌﾞｱｯｾﾝ	1	B,D INC.1-33
-	135L3-80201		VALVE-ASSY	ﾊﾞﾙﾌﾞｱｯｾﾝ	1	H,J INC.1-33
1	NO PART NO.	*#	BODY	ﾎﾞﾃﾞｨ	1	B,D,H,J
2	NO PART NO.	*#	PLUNGER	ﾌﾟﾗﾝｼﾞｬ	1	B,D,H,J
3	15583-82051		SPRING	ｽﾌﾟﾘﾝｸﾞ	1	B,D,H,J
4	15943-82641		SPRING	ｽﾌﾟﾘﾝｸﾞ	1	B,D,H,J
5	15943-82651		SPACER	ｽﾍﾟｰｻ	1	B,D,H,J
6	02110-00030	*	RING,SNAP	ｽﾅｯﾌﾟﾘﾝｸﾞ	1	B,D,H,J
7	15943-82661	*	SEAL,OIL	ｼｰﾙ	1	B,D,H,J
8	NO PART NO.	*#	SPOOL,INCHING	ｽﾌﾟｰﾙ	1	B,D,H,J
9	130C3-82751		VALVE,SOLENOID	ﾊﾞﾙﾌﾞ	1	B,D
-	135L3-82001		VALVE,SOLENOID	ﾊﾞﾙﾌﾞ	1	H,J
10	01170-05045		BOLT	ﾎﾞﾙﾄ	4	B,D,H,J
11	130C3-83011	*	SPOOL	ｽﾌﾟｰﾙ	2	B,D,H,J
12	130C3-82731		SPRING	ｽﾌﾟﾘﾝｸﾞ	1	B,D,H,J
13	NO PART NO.	*#	SPOOL	ｽﾌﾟｰﾙ	1	B,D,H,J
14	15943-82741		SPRING	ｽﾌﾟﾘﾝｸﾞ	1	B,D,H,J
15	15943-82751		SPRING	ｽﾌﾟﾘﾝｸﾞ	1	B,D,H,J
16	15943-82761	*	PISTON	ﾋﾟｽﾄﾝ	1	B,D,H,J
17	15943-82771		STOPPER	ｽﾄｯﾊﾟ	1	B,D,H,J
18	15943-82781		SPRING	ｽﾌﾟﾘﾝｸﾞ	1	B,D,H,J
19	15943-82791		SPRING	ｽﾌﾟﾘﾝｸﾞ	1	B,D:1-107 H,J:1-102
-	15793-82711		SPRING	ｽﾌﾟﾘﾝｸﾞ	1	B,D:108- H,J:103-
20	15943-82801		SPRING	ｽﾌﾟﾘﾝｸﾞ	1	B,D:1-107 H,J:1-102
-	15793-82721		SPRING	ｽﾌﾟﾘﾝｸﾞ	1	B,D:108- H,J:103-
21	135E3-82021		COVER	ｶﾊﾞｰ	1	B,D,H,J
22	135E3-82051	*	GASKET	ｶﾞｽｹｯﾄ	1	B,D,H,J
23	01103-08025		BOLT	ﾎﾞﾙﾄ	7	B,D,H,J
24	135E3-82011		PLATE	ﾌﾟﾚｰﾄ	1	B,D,H,J
25	135E3-82031		GASKET	ｶﾞｽｹｯﾄ	1	B,D:1-256 H,J:1-107
-	135H3-82031	*	GASKET	ｶﾞｽｹｯﾄ	1	B,D:257- H,J:108-
26	135E3-82041		GASKET	ｶﾞｽｹｯﾄ	1	B,D:1-256 H,J:1-107
-	135H3-82041	*	GASKET	ｶﾞｽｹｯﾄ	1	B,D:257- H,J:108-
27	01103-08065		BOLT	ﾎﾞﾙﾄ	3	B,D,H,J
28	01103-08075		BOLT	ﾎﾞﾙﾄ	8	B,D,H,J
29	01103-08100		BOLT	ﾎﾞﾙﾄ	1	B,D,H,J
30	02011-00008		WASHER	ﾜｯｼｬ	19	B,D,H,J
31	23870-52871		PLUG	ﾌﾟﾗｸﾞ	3	B,D,H,J
32	02212-10020		PIN	ﾋﾟﾝ	2	B,D,H,J

FIG.54 CONTROL VALVE (T-TYPE)

(F40425E0) コントロールバルブ

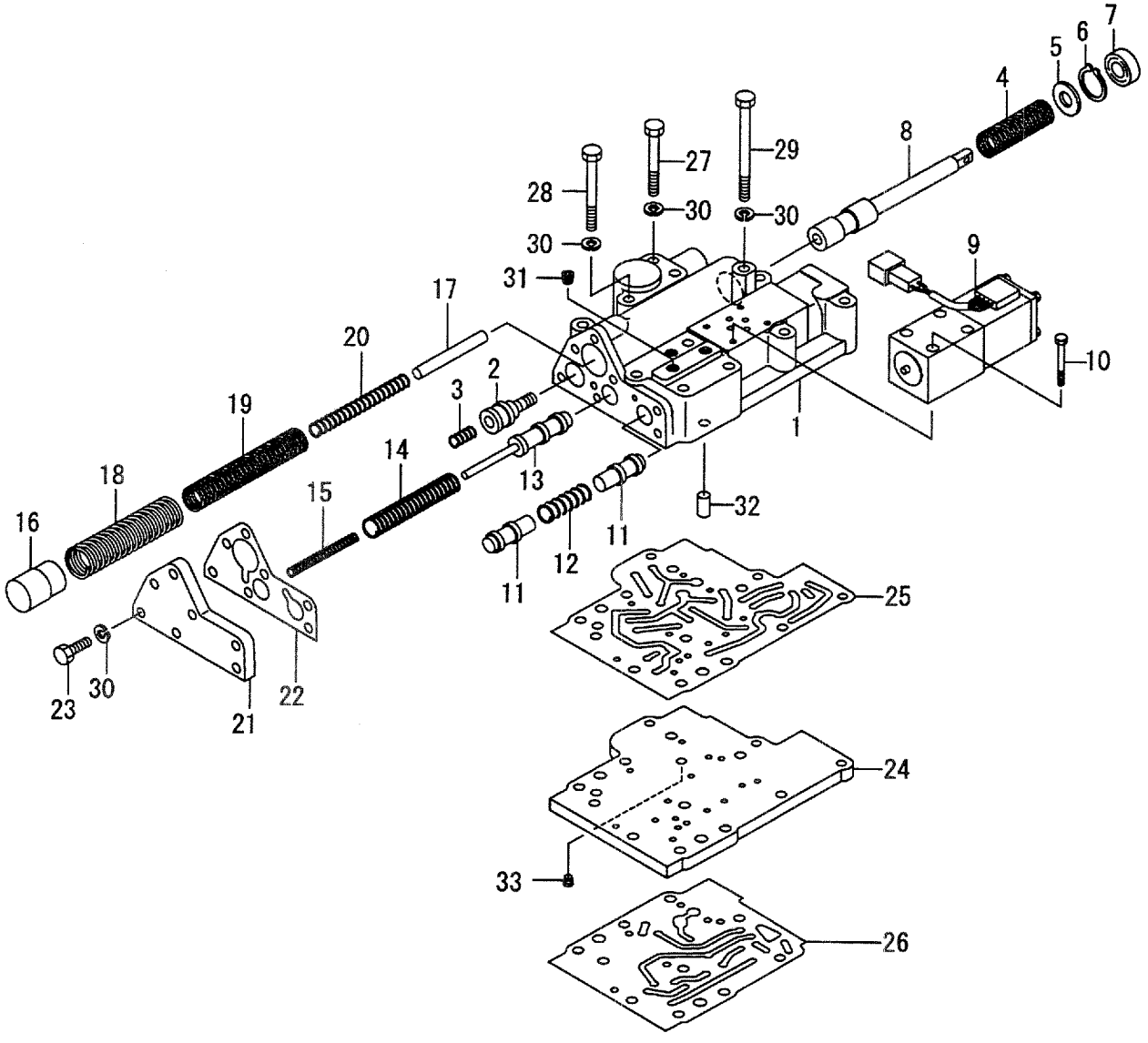

A:FD35C8 D:FD40T8 G:FD50T8 K:FG45T8
B:FD35T8 E:FD45C8 H:FG35T8 L:FG50T8
C:FD40C8 F:FD45T8 J:FG40T8

FIG.54
(F40425E0)

Item No	Part No.	Mark	Description		Req'd	Remarks : Serial No.
33	15943-82881		PLUG	ﾌﾟﾗｸﾞ	1	B,D:1-107 H,J:1-102
-	15793-82861		PLUG	ﾌﾟﾗｸﾞ	1	B,D:108- H,J:103-
K1	135E3-80401		KIT,BODY	ﾎﾞﾃﾞｨｷｯﾄ	1	B,D,H,J INC.1,2,8,11,13,16
K2	135E3-80411		KIT,REPAIR	ﾘﾍﾟｱｷｯﾄ	1	B,D,H,J INC.6,7,22,25,26

FIG.55 CONTROL VALVE (T-TYPE)

(F40425F0) コントロールバルブ

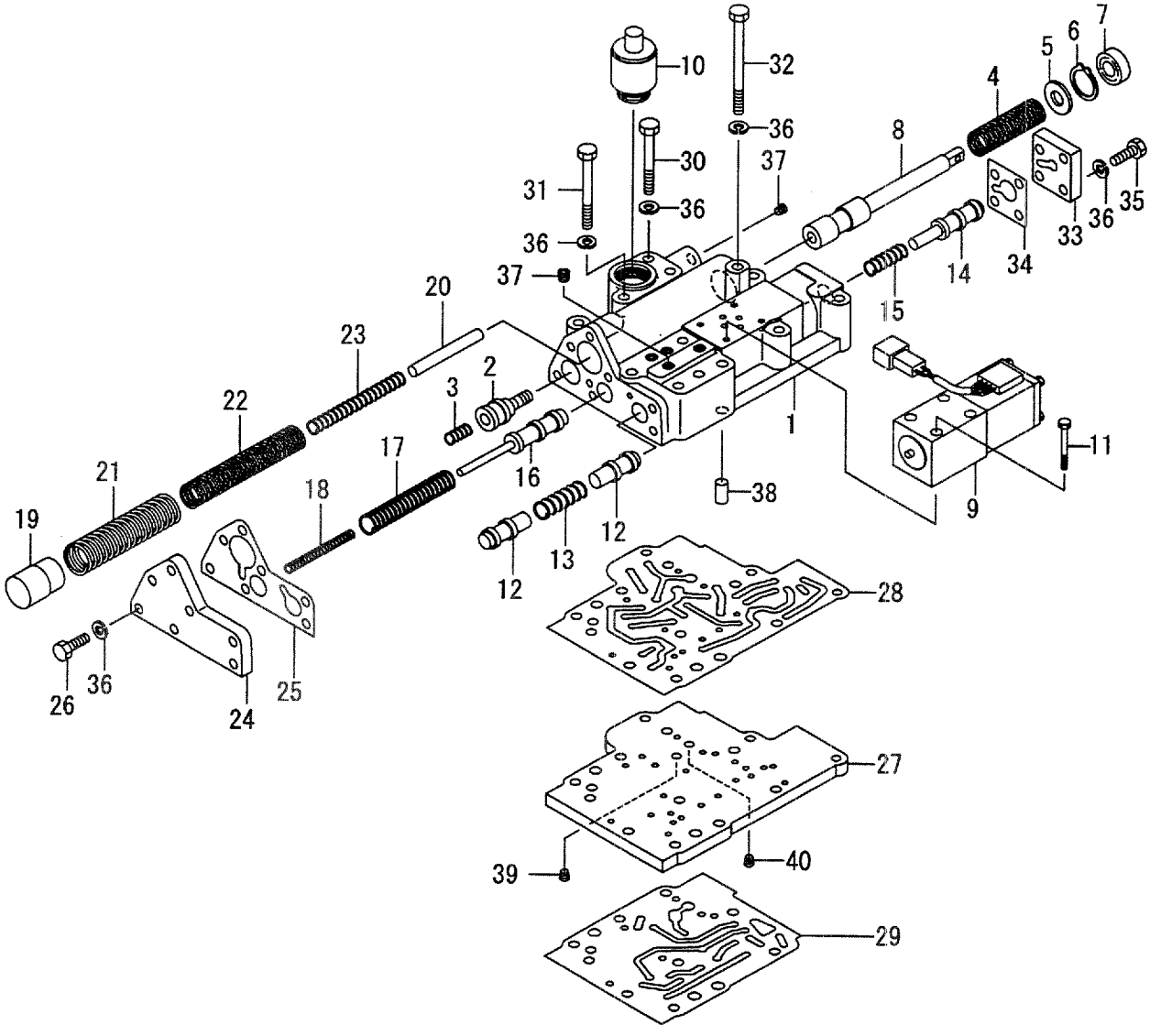

A:FD35C8 D:FD40T8 G:FD50T8 K:FG45T8
B:FD35T8 E:FD45C8 H:FG35T8 L:FG50T8
C:FD40C8 F:FD45T8 J:FG40T8

FIG.55
(F40425F0)

Item No	Part No.	Mark	Description		Req'd	Remarks : Serial No.
A1	135H3-80201		VALVE-ASSY	ﾊﾞﾙﾌﾞｱｯｾﾝ	1	F,G
						INC.1-40
-	135N3-80201		VALVE-ASSY	ﾊﾞﾙﾌﾞｱｯｾﾝ	1	K,L
						INC.1-40
1	NO PART NO.	*#	BODY	ﾎﾞﾃﾞｨ	1	F,G,K,L
2	NO PART NO.	*#	PLUNGER	ﾌﾟﾗﾝｼﾞｬ	1	F,G,K,L
3	15583-82051		SPRING	ｽﾌﾟﾘﾝｸﾞ	1	F,G,K,L
4	15943-82641		SPRING	ｽﾌﾟﾘﾝｸﾞ	1	F,G,K,L
5	15943-82651		SPACER	ｽﾍﾟｰｻ	1	F,G,K,L
6	02110-00030	*	RING,SNAP	ｽﾅｯﾌﾟﾘﾝｸﾞ	1	F,G,K,L
7	15943-82661	*	SEAL,OIL	ｼｰﾙ	2	F,G,K,L
8	NO PART NO.	*#	SPOOL,INCHING	ｽﾌﾟｰﾙ	1	F,G,K,L
9	130C3-82751		VALVE,SOLENOID	ﾊﾞﾙﾌﾞ	1	F,G
-	135L3-82001		VALVE,SOLENOID	ﾊﾞﾙﾌﾞ	1	K,L
10	16382-55091		VALVE,SOLENOID	ﾊﾞﾙﾌﾞ	1	F,G
-	135N3-82001		VALVE,SOLENOID	ﾊﾞﾙﾌﾞ	1	K,L
11	01170-05045		BOLT	ﾎﾞﾙﾄ	4	F,G,K,L
12	130C3-83011	*	SPOOL	ｽﾌﾟｰﾙ	2	F,G,K,L
13	130C3-82731		SPRING	ｽﾌﾟﾘﾝｸﾞ	1	F,G,K,L
14	135H3-82061	*	SPOOL	ｽﾌﾟｰﾙ	1	F,G,K,L
15	130C3-82741		SPRING	ｽﾌﾟﾘﾝｸﾞ	1	F,G,K,L
16	NO PART NO.	*#	SPOOL	ｽﾌﾟｰﾙ	1	F,G,K,L
17	15943-82741		SPRING	ｽﾌﾟﾘﾝｸﾞ	1	F,G,K,L
18	15943-82751		SPRING	ｽﾌﾟﾘﾝｸﾞ	1	F,G,K,L
19	15943-82761	*	PISTON	ﾋﾟｽﾄﾝ	1	F,G,K,L
20	15943-82771		STOPPER	ｽﾄｯﾊﾟ	1	F,G,K,L
21	15943-82781		SPRING	ｽﾌﾟﾘﾝｸﾞ	1	F,G,K,L
22	15943-82791		SPRING	ｽﾌﾟﾘﾝｸﾞ	1	F:1-107
						G:1-101
						K,L:1-102
-	15793-82711		SPRING	ｽﾌﾟﾘﾝｸﾞ	1	F:108-
						G:102-
						K,L:103-
23	15943-82801		SPRING	ｽﾌﾟﾘﾝｸﾞ	1	F:1-107
						G:1-101
						K,L:1-102
-	15793-82721		SPRING	ｽﾌﾟﾘﾝｸﾞ	1	F:108-
						G:102-
						K,L:103-
24	135E3-82021		COVER	ｶﾊﾞｰ	1	F,G,K,L
25	135E3-82051	*	GASKET	ｶﾞｽｹｯﾄ	1	F,G,K,L
26	01103-08025		BOLT	ﾎﾞﾙﾄ	7	F,G,K,L
27	135H3-82011		PLATE	ﾌﾟﾚｰﾄ	1	F,G,K,L
28	135H3-82031	*	GASKET	ｶﾞｽｹｯﾄ	1	F,G,K,L
29	135H3-82041	*	GASKET	ｶﾞｽｹｯﾄ	1	F,G,K,L
30	01103-08065		BOLT	ﾎﾞﾙﾄ	3	F,G,K,L
31	01103-08075		BOLT	ﾎﾞﾙﾄ	7	F,G,K,L
32	01103-08100		BOLT	ﾎﾞﾙﾄ	1	F,G,K,L
33	130C3-83041		COVER	ｶﾊﾞｰ	1	F,G,K,L
34	130C3-83081		GASKET	ｶﾞｽｹｯﾄ	1	F,G,K,L

FIG.55 CONTROL VALVE (T-TYPE)

(F40425F0) コントロールバルブ

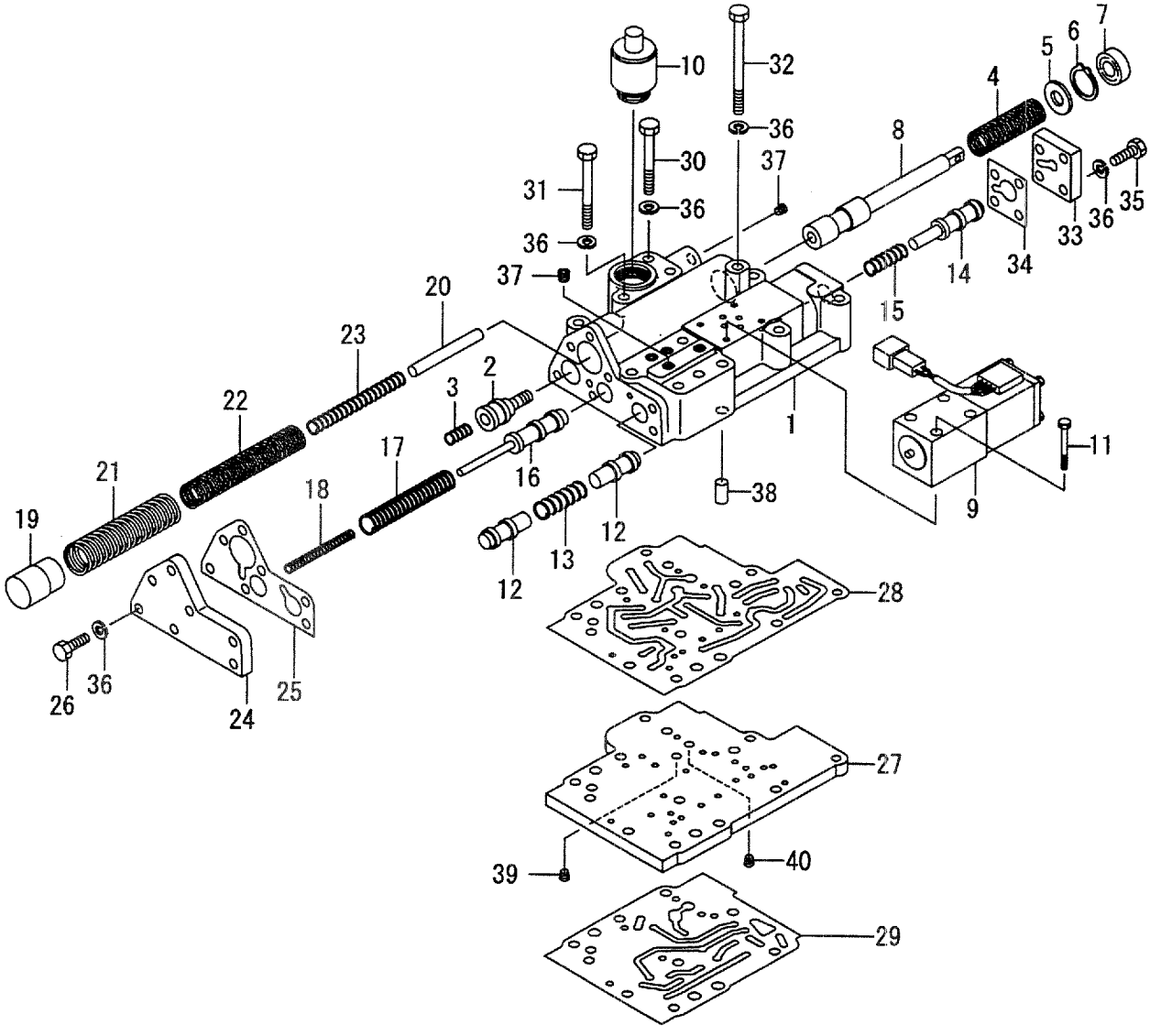

A:FD35C8 D:FD40T8 G:FD50T8 K:FG45T8
B:FD35T8 E:FD45C8 H:FG35T8 L:FG50T8
C:FD40C8 F:FD45T8 J:FG40T8

FIG.55
(F40425F0)

Item No	Part No.	Mark	Description		Req'd	Remarks : Serial No.
35	01103-08025		BOLT	ﾎﾞﾙﾄ	4	F,G,K,L
36	02011-00008		WASHER	ﾜｯｼｬ	23	F,G,K,L
37	23870-52871		PLUG	ﾌﾟﾗｸﾞ	3	F,G,K,L
38	02212-10020		PIN	ﾋﾟﾝ	2	F,G,K,L
39	15943-82881		PLUG	ﾌﾟﾗｸﾞ	1	F:1-107
						G:1-101
						K,L:1-102
-	15793-82861		PLUG	ﾌﾟﾗｸﾞ	1	F:108-
						G:102-
						K,L:103-
40	115G3-82041		PLUG	ﾌﾟﾗｸﾞ	1	F,G,K,L
K1	135H3-80401		KIT,BODY	ﾎﾞﾃﾞｨｷｯﾄ	1	F,G,K,L
						INC.1,2,8,12,14,16,19
K2	135E3-80411		KIT,REPAIR	ﾘﾍﾟｱｷｯﾄ	1	F,G,K,L
						INC.6,7,25,28,29

FIG.56 CHARGING PUMP (T-TYPE)

(F40425G0) ﾁｬｰｼﾞﾝｸﾞﾎﾟﾝﾌﾟ

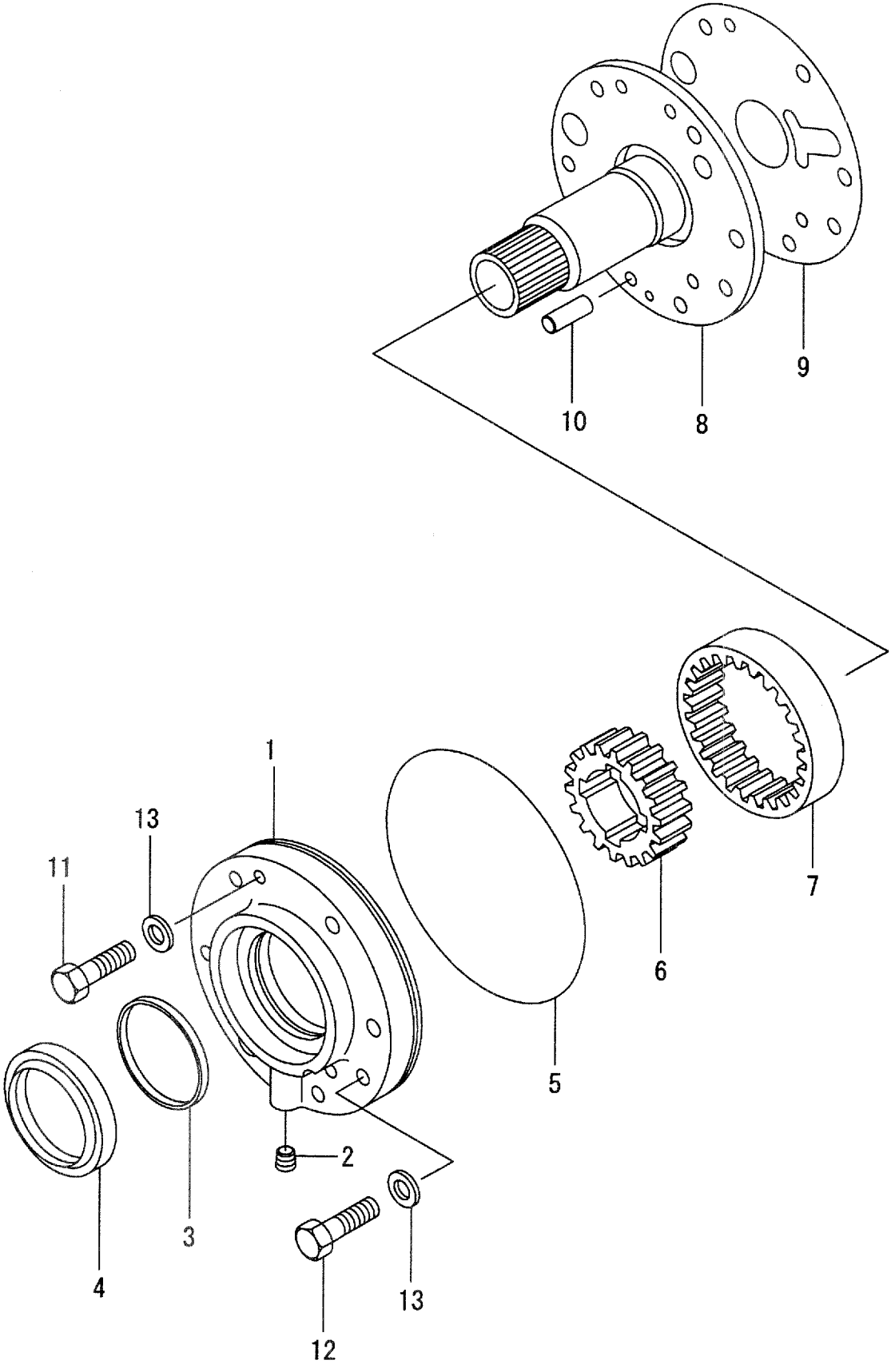

A:FD35C8 D:FD40T8 G:FD50T8 K:FG45T8
B:FD35T8 E:FD45C8 H:FG35T8 L:FG50T8
C:FD40C8 F:FD45T8 J:FG40T8

FIG.56
(F40425G0)

Item No	Part No.	Mark	Description		Req'd	Remarks : Serial No.
A1	124U3-80221		PUMP-ASSY,CHARGING		1	B,D,F,G,H,J,K,L
				ﾁｬｰｼﾞﾝｸﾞﾎﾟﾝﾌﾟｱｯｾﾝ		INC.1-13
1	NO PART NO.	#*	CASE	ｹｰｽ	1	B,D,F,G,H,J,K,L
						INC.2-4
2	23870-52821		PLUG	ﾌﾟﾗｸﾞ	1	B,D,F:1-245
						G:1-127
						H,J,K:1-105
						L:1-102
3	124U3-82111	*	SEAL,RING	ｼｰﾙ	1	B,D,F,G,H,J,K,L
4	124U3-82122	*	SEAL,OIL	ｼｰﾙ	1	B,D,F,G,H,J,K,L
5	124U3-82481	*	O-RING	Oﾘﾝｸﾞ	1	B,D,F,G,H,J,K,L
6	NO PART NO.	#*	GEAR,DRIVE	ｷﾞｱｰ	1	B,D,F,G,H,J,K,L
7	NO PART NO.	#*	GEAR,DRIVEN	ｷﾞｱｰ	1	B,D,F,G,H,J,K,L
8	NO PART NO.	#*	SUPPORT	ｻﾎﾟｰﾄ	1	B,D,F,G,H,J,K,L
9	124U3-82181	*	GASKET	ｶﾞｽｹｯﾄ	1	B,D,F,G,H,J,K,L
10	02212-10025		PIN	ﾋﾟﾝ	2	B,D,F,G,H,J,K,L
11	01103-10035		BOLT	ﾎﾞﾙﾄ	2	B,D,F,G,H,J,K,L
12	01103-10050		BOLT	ﾎﾞﾙﾄ	7	B,D,F,G,H,J,K,L
13	15943-82701	*	PACKING	ﾊﾟｯｷﾝｸﾞ	9	B,D,F,G,H,J,K,L
K1	124U3-80422		KIT,BODY	ﾎﾞﾃﾞｨｷｯﾄ	1	B,D,F,G,H,J,K,L
						INC.1,6,7,8
K2	124U3-80412		KIT,REPAIR	ﾘﾍﾟｱｷｯﾄ	1	B,D,F,G,H,J,K,L
						INC.3,4,5,9,13
K3	124U3-80281		KIT,GEAR	ｷﾞｱｰｷｯﾄ	1	B,D,F,G,H,J,K,L
						INC.6,7

FIG.57 TRANSMISSION CONTROL (C-TYPE)

(F40425H0) トランスミッションコントロール

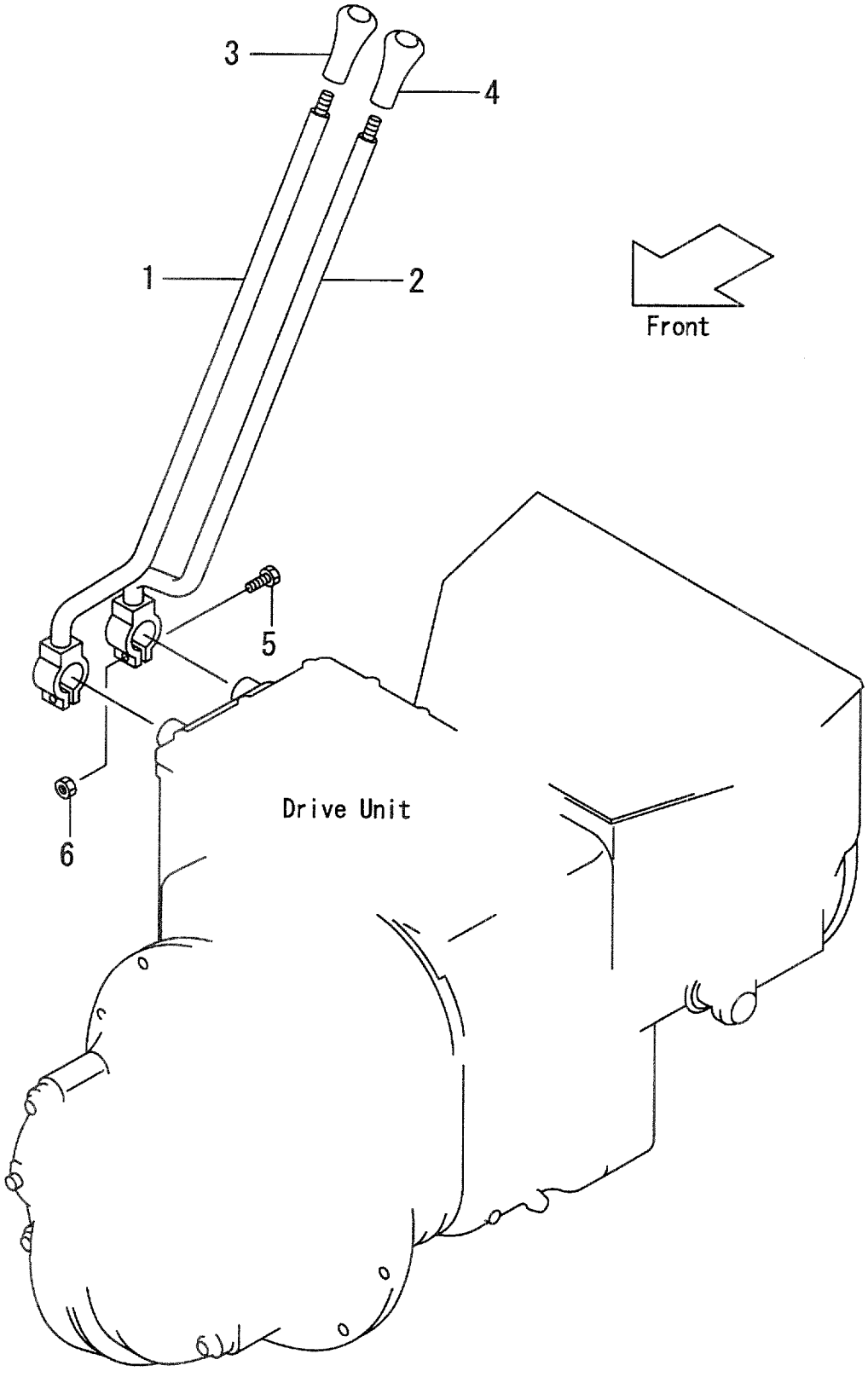

A:FD35C8 D:FD40T8 G:FD50T8 K:FG45T8
B:FD35T8 E:FD45C8 H:FG35T8 L:FG50T8
C:FD40C8 F:FD45T8 J:FG40T8

FIG.57
(F40425H0)

Item No	Part No.	Mark	Description	Req'd	Remarks : Serial No.
1	224W3-92001		LEVER,SPEED-CHANGE レバー	1	A,C,E
-	224W3-92201		LEVER,SPEED-CHANGE レバー	1	A,C,E [LCR]
2	224W3-92021		LEVER,DIRECTION-CHAN レバー	1	A,C,E
-	224W3-92221		LEVER,DIRECTION-CHAN レバー	1	A,C,E [LCR]
3	214A2-52002		KNOB,SPEED ノブ	1	A,C,E
4	214A2-52012		KNOB,DIRECTION ノブ	1	A,C,E
5	01183-08035		BOLT ボルト	2	A,C,E
6	01400-00008		NUT ナット	2	A,C,E

FIG.58 DRIVE AXLE

(F4043010) ﾄﾞﾗｲﾌﾞｱｸｽﾙ

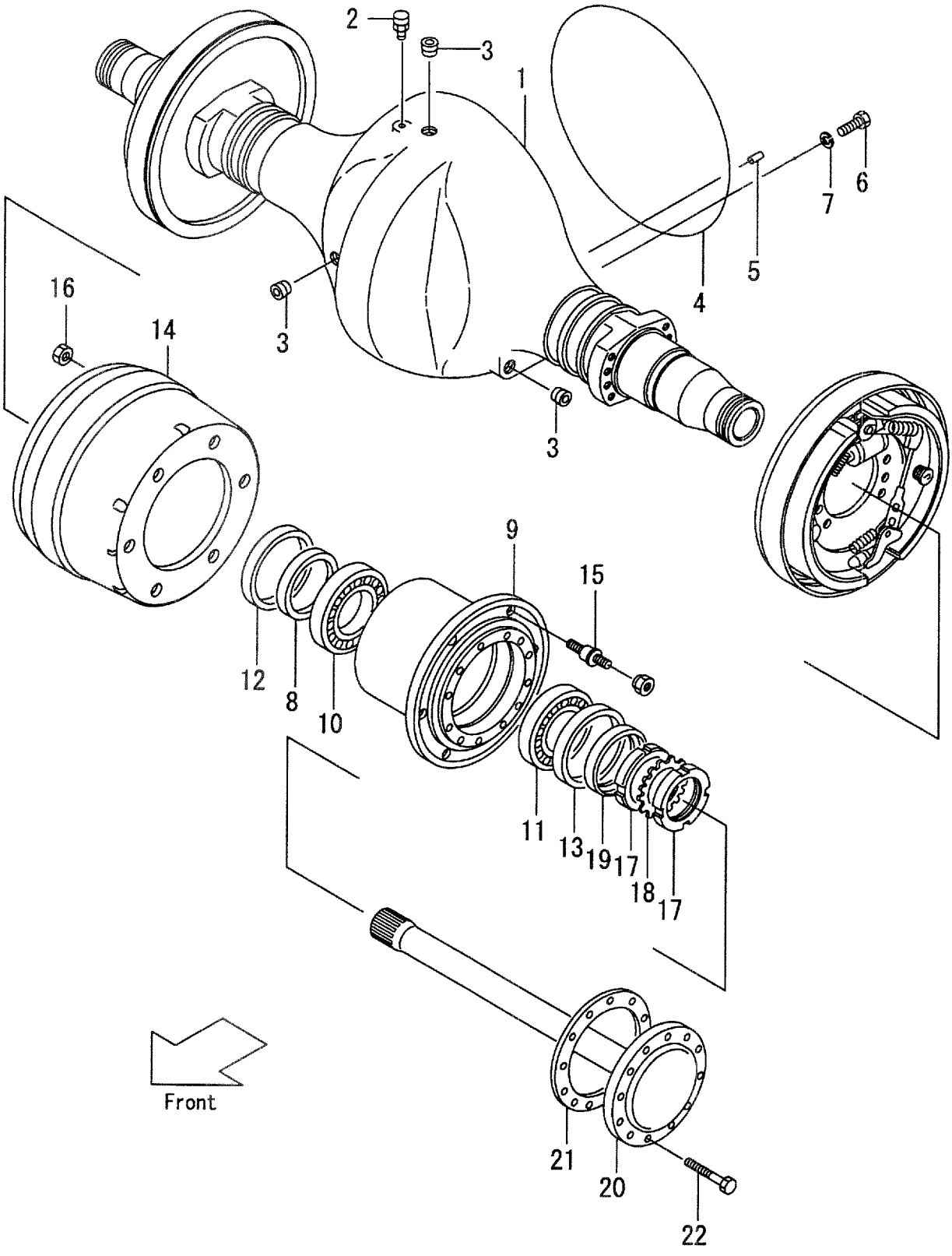

A:FD35C8 D:FD40T8 G:FD50T8 K:FG45T8
B:FD35T8 E:FD45C8 H:FG35T8 L:FG50T8
C:FD40C8 F:FD45T8 J:FG40T8

FIG.58
(F4043010)

Item No	Part No.	Mark	Description		Req'd	Remarks : Serial No.
1	224W3-02001		HOUSING	ﾊｳｼﾞﾝｸﾞ	1	A,B,C,D,H,J
-	524W7-52031		HOUSING	ﾊｳｼﾞﾝｸﾞ	1	A,C
						[SM]
2	15573-42151		BREATHER,AIR	ﾌﾞﾘｰｻﾞ	1	A,B,C,D,H,J
3	22193-03001		PLUG	ﾌﾟﾗｸﾞ	3	A,B,C,D,H,J
4	124T3-52381		O-RING	Oﾘﾝｸﾞ	1	A,B,C,D,H,J
5	02212-10020		PIN	ﾋﾟﾝ	1	A,B,C,D,H,J
6	01106-12035		BOLT	ﾎﾞﾙﾄ	16	A,B,C,D,H,J
7	02011-00012		WASHER	ﾜｯｼｬ	12	A,B,C,D,H,J
8	23743-02061		RETAINER	ﾘﾃｰﾅ	2	A,B,C,D,H,J
9	228A3-02011		HUB	ﾊﾌﾞ	2	A,B,C,D,H,J
10	03071-30219		BEARING	ﾍﾞｱﾘﾝｸﾞ	2	A,B,C,D,H,J
11	03071-30216		BEARING	ﾍﾞｱﾘﾝｸﾞ	2	A,B,C,D,H,J
12	03217-14501		SEAL,OIL	ｼｰﾙ	2	A,B,C,D,H,J
13	03217-11501		SEAL,OIL	ｼｰﾙ	2	A,B,C,D,H,J
14	24603-02021		DRUM	ﾄﾞﾗﾑ	2	A,B,C,D,H,J
15	24353-72001		BOLT	ﾎﾞﾙﾄ	12	A,B,C,D,H,J
16	01400-10020		NUT	ﾅｯﾄ	12	A,B,C,D,H,J
17	03192-00016		NUT	ﾅｯﾄ	4	A,B,C,D,H,J
18	03192-10016		WASHER	ﾜｯｼｬ	2	A,B,C,D,H,J
19	23743-02071		RETAINER	ﾘﾃｰﾅ	2	A,B,C,D,H,J
20	224W3-02011		SHAFT	ｼｬﾌﾄ	2	A,B,C,D,H,J
21	23743-02082		PACKING	ﾊﾟｯｷﾝｸﾞ	2	A,B,C,D,H,J
22	24453-02061		BOLT	ﾎﾞﾙﾄ	24	A,B,C,D,H,J

FIG.59 DRIVE AXLE

(F4043020) ﾄﾞﾗｲﾌﾞｱｸｽﾙ

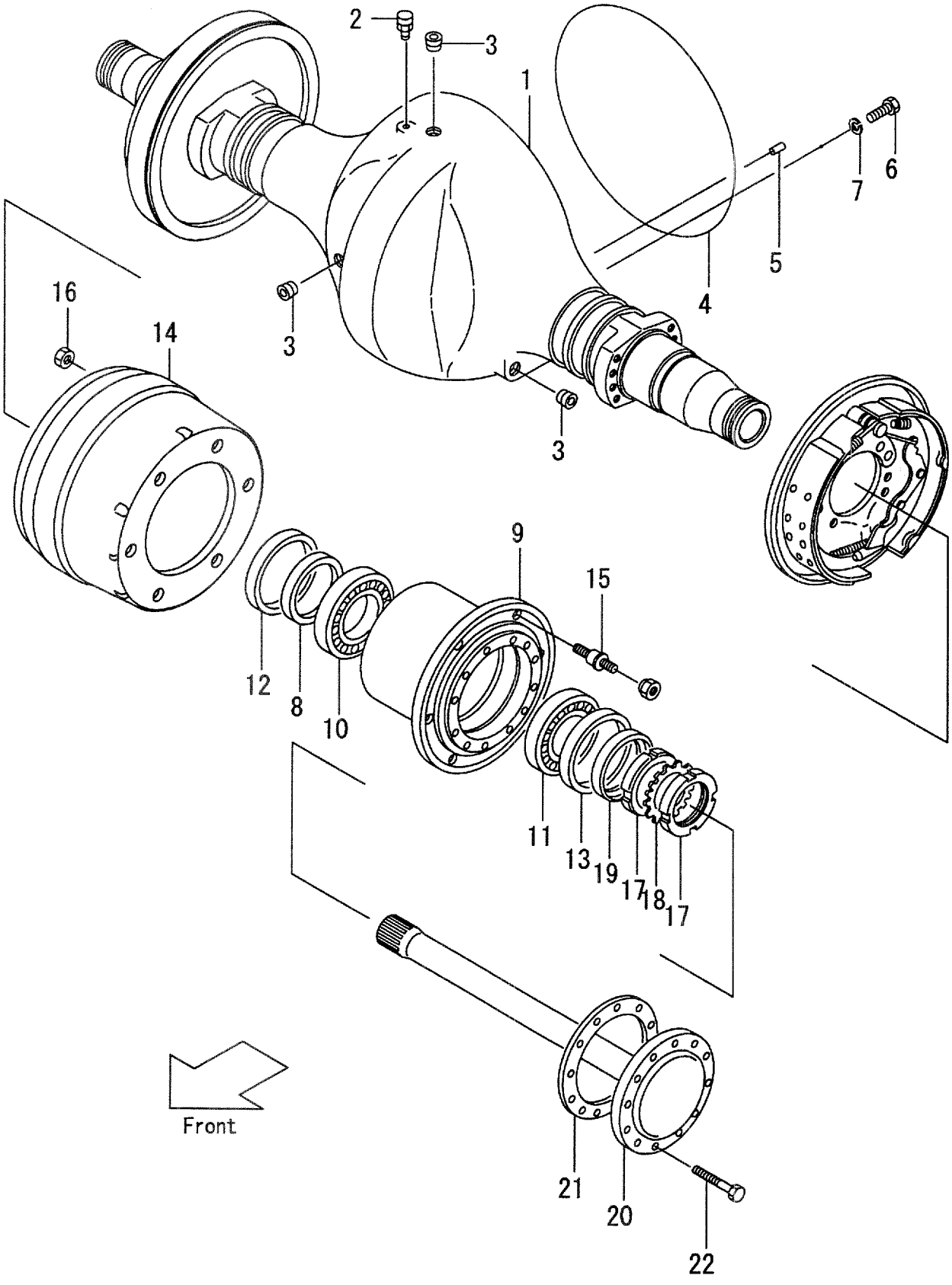

A:FD35C8 D:FD40T8 G:FD50T8 K:FG45T8
B:FD35T8 E:FD45C8 H:FG35T8 L:FG50T8
C:FD40C8 F:FD45T8 J:FG40T8

FIG.59
(F4043020)

Item No	Part No.	Mark	Description		Req'd	Remarks : Serial No.
1	228E3-02001		HOUSING	ﾊｳｼﾞﾝｸﾞ	1	E,F,G,K,L
-	528C7-52031		HOUSING	ﾊｳｼﾞﾝｸﾞ	1	E
						[SM]
2	15573-42151		BREATHER,AIR	ﾌﾞﾘｰｻﾞ	1	E,F,G,K,L
3	22193-03001		PLUG	ﾌﾟﾗｸﾞ	3	E,F,G,K,L
4	124T3-52381		O-RING	Oﾘﾝｸﾞ	1	E,F,G,K,L
5	02212-10020		PIN	ﾋﾟﾝ	1	E,F,G,K,L
6	01106-12035		BOLT	ﾎﾞﾙﾄ	12	E,F,G,K,L
7	02011-00012		WASHER	ﾜｯｼｬ	12	E,F,G,K,L
8	23743-02061		RETAINER	ﾘﾃｰﾅ	2	E,F,G,K,L
9	228A3-02011		HUB	ﾊﾌﾞ	2	E,F,G,K,L
10	03071-30219		BEARING	ﾍﾞｱﾘﾝｸﾞ	2	E,F,G,K,L
11	03071-30216		BEARING	ﾍﾞｱﾘﾝｸﾞ	2	E,F,G,K,L
12	03217-14501		SEAL,OIL	ｼｰﾙ	2	E,F,G,K,L
13	03217-11501		SEAL,OIL	ｼｰﾙ	2	E,F,G,K,L
14	228A3-02021		DRUM	ﾄﾞﾗﾑ	2	E,F,G,K,L
15	228A3-02031		BOLT	ﾎﾞﾙﾄ	12	E,F,G,K,L
16	01400-10020		NUT	ﾅｯﾄ	12	E,F,G,K,L
17	03192-00016		NUT	ﾅｯﾄ	4	E,F,G,K,L
18	03192-10016		WASHER	ﾜｯｼｬ	2	E,F,G,K,L
19	23743-02071		RETAINER	ﾘﾃｰﾅ	2	E,F,G,K,L
20	224W3-02011		SHAFT	ｼｬﾌﾄ	2	E,F,G,K,L
21	23743-02082		PACKING	ﾊﾟｯｷﾝｸﾞ	2	E,F,G,K,L
22	24453-02061		BOLT	ﾎﾞﾙﾄ	24	E,F,G,K,L

FIG.60 DIFFERENTIAL

(F4043510) ﾃﾞｨﾌｧﾚﾝｼｬﾙ

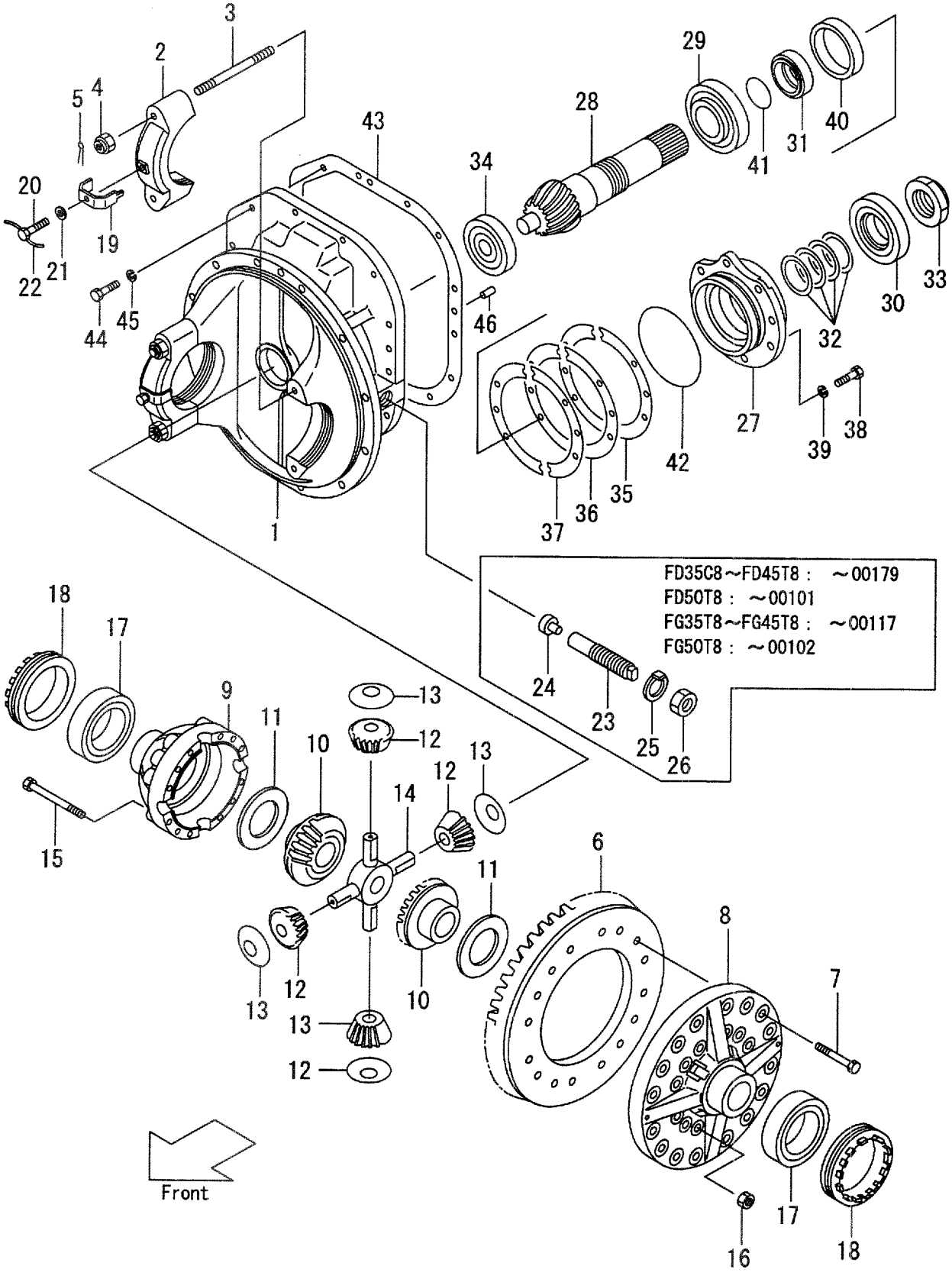

A:FD35C8 D:FD40T8 G:FD50T8 K:FG45T8
B:FD35T8 E:FD45C8 H:FG35T8 L:FG50T8
C:FD40C8 F:FD45T8 J:FG40T8

FIG.60
(F4043510)

Item No	Part No.	Mark	Description		Req'd	Remarks : Serial No.
A1	124T3-50001		DIFFERENTIAL-ASSY	ﾃﾞﾌｧﾚﾝｼｬﾙｱｯｾﾝ	1	INC.1-46
A2	124T3-50201		CARRIER&CAP-ASSY	ｷｬﾘｱ&ｷｬｯﾌﾟｱｯｾﾝ	1	A,B,C,D,E,F:1-179 G:1-101 H,J,K:1-117 L:1-102 INC.1-4
-	124T3-50202		CARRIER&CAP-ASSY	ｷｬﾘｱ&ｷｬｯﾌﾟｱｯｾﾝ	1	A,B,C,D,E,F:180- G:102- H,J,K:118- L:103- INC.1-4
1	NO PART NO.	#	CARRIER	ｷｬﾘｱ	1	
2	NO PART NO.	#	CAP	ｷｬｯﾌﾟ	2	
3	20313-50071		STUD	ｽﾀｯﾄﾞ	4	
4	20233-50281		NUT	ﾅｯﾄ	4	
5	02200-04035		PIN,COTTER	ﾋﾟﾝ	4	
6	NO PART NO.	#*	RING,GEAR	ﾘﾝｸﾞ	1	
7	01106-14050		BOLT	ﾎﾞﾙﾄ	16	
A3	124T3-59801		CASE-SUB-ASSY,CROSS	ｹｰｽｻﾌﾞｱｯｾﾝ	1	INC.8,9,15,16
8	NO PART NO.	#	CASE,LH,CROSS	ｹｰｽ	1	
9	NO PART NO.	#	CASE,LH,CROSS	ｹｰｽ	1	
10	124T3-52091		GEAR,SIDE	ｷﾞﾔｰ	2	
11	124T3-52181		WASHER,T-2.0	ﾜｯｼｬ	2	
-	124T3-52401		WASHER,T-1.8	ﾜｯｼｬ	(2)	
-	124T3-52411		WASHER,T-1.9	ﾜｯｼｬ	(2)	
-	124T3-52191		WASHER,T-2.2	ﾜｯｼｬ	(2)	
-	124T3-52201		WASHER,T-2.3	ﾜｯｼｬ	(2)	
-	124T3-52211		WASHER,T-2.6	ﾜｯｼｬ	(2)	
12	124T3-52101		PINION	ﾋﾟﾆｵﾝ	4	
13	124T3-52231		WASHER	ﾜｯｼｬ	4	
14	124T3-52021		SPIDER	ｽﾊﾟｲﾀﾞ	1	
15	124T3-52051		BOLT	ﾎﾞﾙﾄ	12	
16	01400-10014		NUT	ﾅｯﾄ	12	
17	124T3-52261		BEARING	ﾍﾞｱﾘﾝｸﾞ	2	
18	15953-52091		ADJUSTER	ｱｼﾞｬｽﾀ	2	
19	13913-52081	*	LOCK	ﾛｯｸ	2	
20	01130-10020		BOLT	ﾎﾞﾙﾄ	2	
21	02010-00010		WASHER	ﾜｯｼｬ	2	
22	02280-10010		WIRE	ﾜｲﾔ	2	
23	124T3-52221		SCREW	ｽｸﾘｭ	1	A,B,C,D,E,F:1-179 G:1-101 H,J,K:1-117 L:1-102
24	20313-50091		SLIPPER	ｽﾘｯﾊﾟ	1	A,B,C,D,E,F:1-179 G:1-101 H,J,K:1-117 L:1-102

FIG.60 DIFFERENTIAL

(F4043510) ﾃﾞｨﾌｧﾚﾝｼｬﾙ

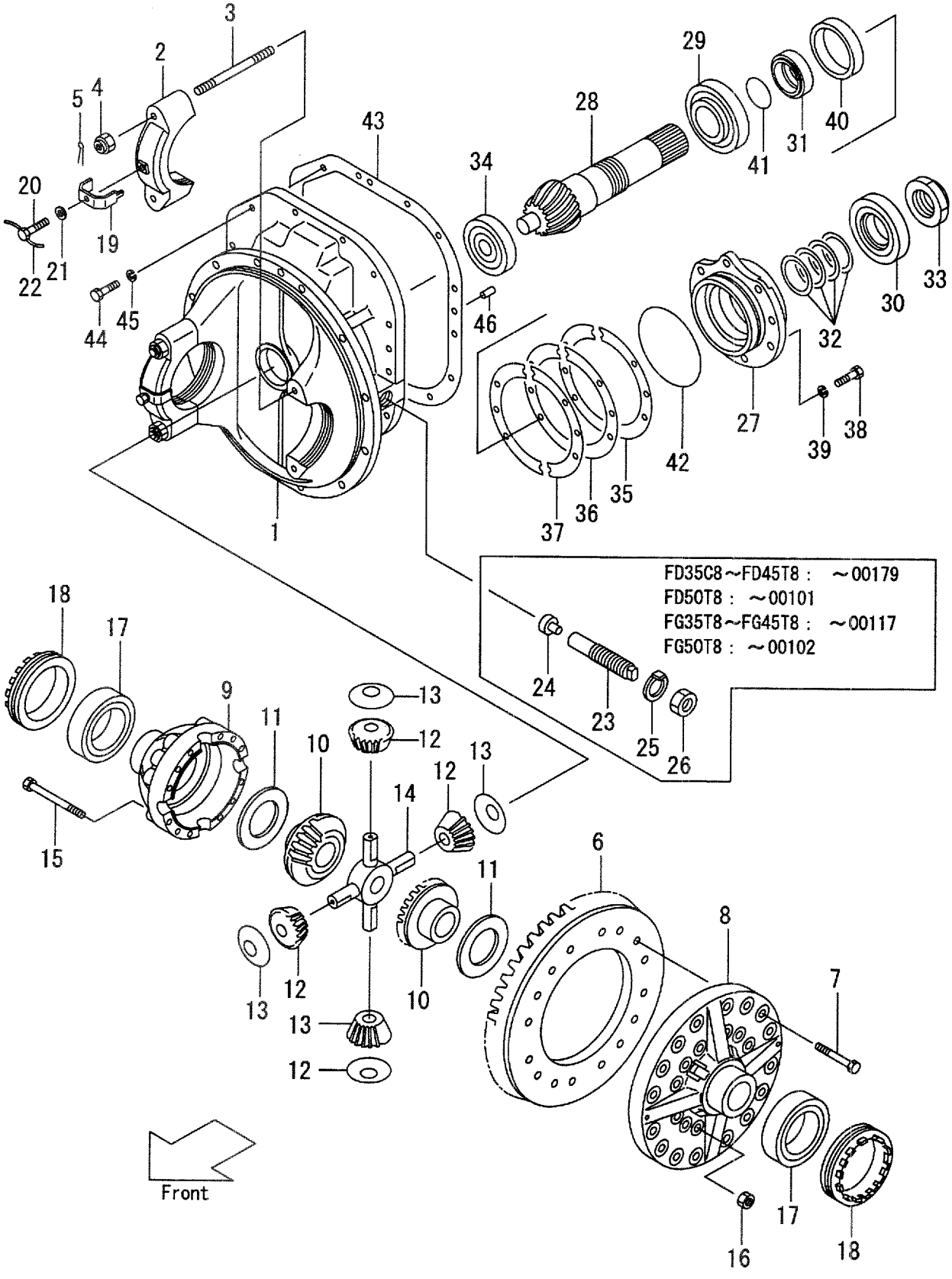

A:FD35C8 D:FD40T8 G:FD50T8 K:FG45T8
B:FD35T8 E:FD45C8 H:FG35T8 L:FG50T8
C:FD40C8 F:FD45T8 J:FG40T8

FIG.60
(F4043510)

Item No	Part No.	Mark	Description		Req'd	Remarks : Serial No.
25	02030-00027		WASHER	ﾜｯｼｬ	1	A,B,C,D,E,F:1-179 G:1-101 H,J,K:1-117 L:1-102
26	01402-00027		NUT	ﾅｯﾄ	1	A,B,C,D,E,F:1-179 G:1-101 H,J,K:1-117 L:1-102
A4	124T3-50351		PINION-ASSY,SPIRAL-BEVEL	ﾋﾟﾆｵﾝｱｯｾﾝ	1	INC.27-34
27	124T3-52081		CASE	ｹｰｽ	1	
28	NO PART NO.	#*	PINION	ﾋﾟﾆｵﾝ	1	
29	124T3-52271		BEARING	ﾍﾞｱﾘﾝｸﾞ	1	
30	14603-52131		BEARING	ﾍﾞｱﾘﾝｸﾞ	1	
31	124T3-52071		PIECE	ﾋﾟｰｽ	1	
32	15843-52071		SHIM,T-0.1	ｼﾑ	1	
-	15843-52171		SHIM,T-0.15	ｼﾑ	(1)	
-	15843-52081		SHIM,T-0.2	ｼﾑ	(1)	
-	15843-52091		SHIM,T-0.5	ｼﾑ	(1)	
33	124T3-52321		NUT	ﾅｯﾄ	1	
34	124T3-52281		BEARING	ﾍﾞｱﾘﾝｸﾞ	1	
35	124T3-52111	*	SHIM,T-0.1	ｼﾑ	AR	
36	124T3-52121	*	SHIM,T-0.2	ｼﾑ	AR	
37	124T3-52131	*	SHIM,T-0.5	ｼﾑ	2	
38	01103-14040		BOLT	ﾎﾞﾙﾄ	6	
39	02011-00014		WASHER	ﾜｯｼｬ	6	
40	124T3-52351	*	SEAL,OIL	ｼｰﾙ	1	
41	124T3-52291	*	O-RING	Oﾘﾝｸﾞ	1	
42	124T3-52301	*	O-RING	Oﾘﾝｸﾞ	1	
43	124T3-52241	*	GASKET	ｶﾞｽｹｯﾄ	1	
44	01103-12035		BOLT	ﾎﾞﾙﾄ	14	
45	02011-00012		WASHER	ﾜｯｼｬ	14	
46	02212-10025		PIN	ﾋﾟﾝ	2	
K1	124T3-50501		KIT,GEAR,RING	ｷﾞﾔｰｷｯﾄ	1	INC.6,28
K2	124T3-50381		KIT,REPAIR	ﾘﾍﾟｱｷｯﾄ	1	INC.19,35-37,40-43

FIG.61 WHEEL BRAKE

(F4043710) ホイールブレーキ

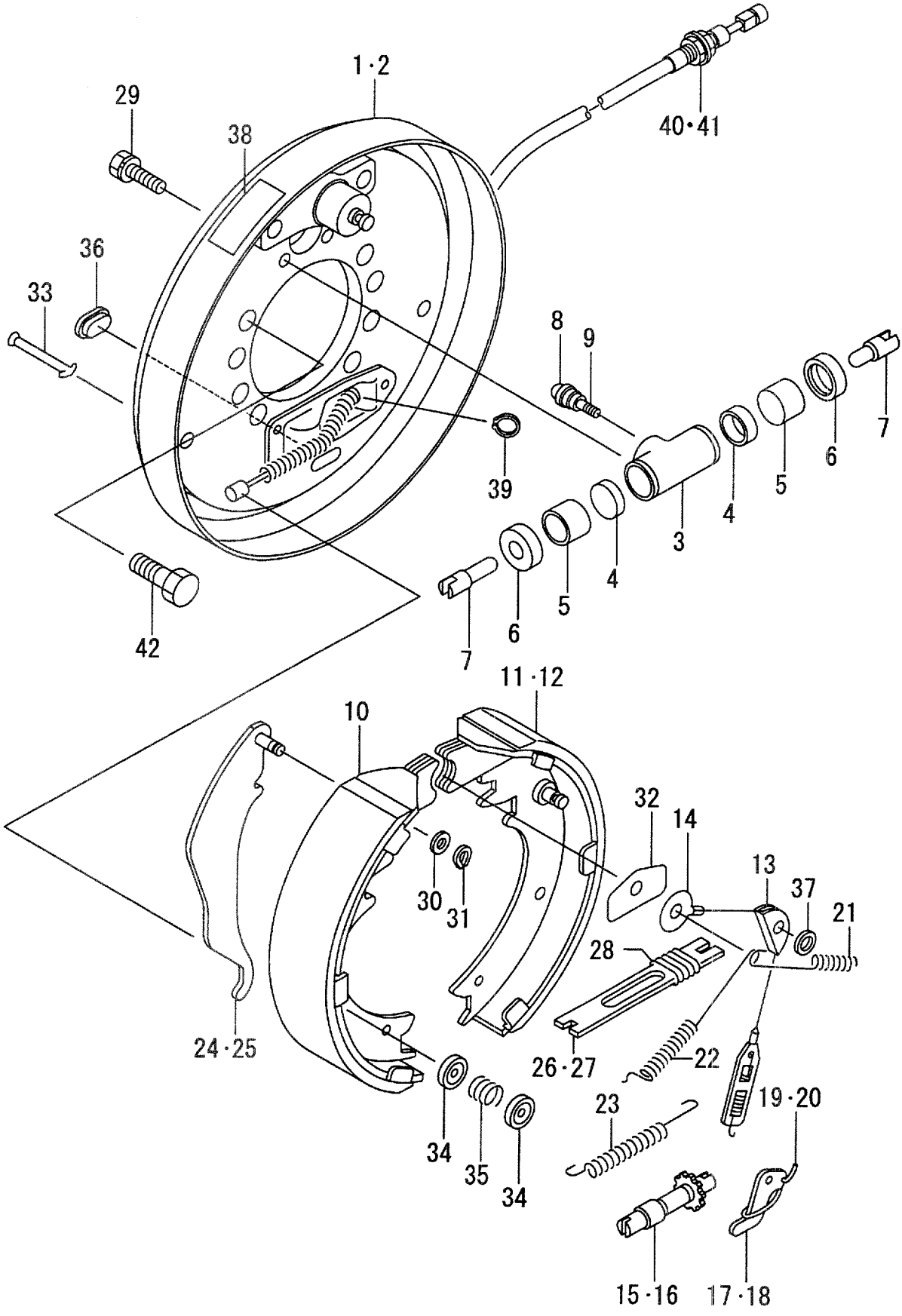

A:FD35C8:1-110 D:FD40T8:1-110 G:FD50T8 K:FG45T8
B:FD35T8:1-110 E:FD45C8 H:FG35T8:1-141 L:FG50T8
C:FD40C8:1-110 F:FD45T8 J:FG40T8:1-141

FIG.61
(F4043710)

Item No	Part No.	Mark	Description		Req'd	Remarks : Serial No.
A1	224W3-70211		BRAKE-ASSY,WHEEL,LH	ﾎｲｰﾙﾌﾞﾚｰｷｱｯｾﾝ	1	A,B,C,D,H,J
						INC.1-40
A2	224W3-70201		BRAKE-ASSY,WHEEL,RH	ﾎｲｰﾙﾌﾞﾚｰｷｱｯｾﾝ	1	A,B,C,D,H,J
						INC.1-39,41
A3	C-52-11255-10004		BRAKE-ASSY,LH	ﾌﾞﾚｰｷｱｯｾﾝ	1	A,B,C,D,H,J
						INC.1-38
A4	C-52-11255-20004		BRAKE-ASSY,RH	ﾌﾞﾚｰｷｱｯｾﾝ	1	A,B,C,D,H,J
						INC.1-38
1	C-52-11255-11002		BACK-PLATE,LH	ﾊﾞｯｸﾌﾟﾚｰﾄ	1	A,B,C,D,H,J
2	C-52-11255-21002		BACK-PLATE,RH	ﾊﾞｯｸﾌﾟﾚｰﾄ	1	A,B,C,D,H,J
A5	C-52-11255-52003		CYL-ASSY,WHEEL	ﾎｲｰﾙｼﾘﾝﾀﾞｱｯｾﾝ	2	A,B,C,D,H,J
						INC.3-7
3	NO PART NO.	#	CYLINDER	ｼﾘﾝﾀﾞ	2	A,B,C,D,H,J
4	NO PART NO.	#	CUP	ｶｯﾌﾟ	4	A,B,C,D,H,J
5	NO PART NO.	#	PISTON	ﾋﾟｽﾄﾝ	4	A,B,C,D,H,J
6	NO PART NO.	#	BOOTS	ﾌﾞｰﾂ	4	A,B,C,D,H,J
7	NO PART NO.	#	LINK	ﾘﾝｸ	4	A,B,C,D,H,J
8	NO PART NO.	#	CAP,BLEADER	ｷｬｯﾌﾟ	2	A,B,C,D,H,J
9	NO PART NO.	#	SCREW	ｽｸﾘｭ	2	A,B,C,D,H,J
10	NO PART NO.	#	SHOE & LINING	ｼｭｰ&ﾗｲﾆﾝｸﾞ	2	A,B,C,D,H,J
11	NO PART NO.	#	SHOE,LINING&PIN,LH	ｼｭｰ	1	A,B,C,D,H,J
12	NO PART NO.	#	SHOE,LINING&PIN,RH	ｼｭｰ	1	A,B,C,D,H,J
13	C-52-11249-55310		GUIDE	ｶﾞｲﾄﾞ	2	A,B,C,D,H,J
14	20803-71101		SPRING & CABLE	ｽﾌﾟﾘﾝｸﾞ & ｹｰﾌﾞﾙ	2	A,B,C,D,H,J
15	C-52-11242-13300		ADJUSTER,LH	ｱｼﾞｬｽﾀ	1	A,B,C,D,H,J
16	C-52-11242-23300		ADJUSTER,RH	ｱｼﾞｬｽﾀ	1	A,B,C,D,H,J
17	C-52-11218-15151		LEVER,LH	ﾚﾊﾞｰ	1	A,B,C,D,H,J
18	C-52-11218-25151		LEVER,RH	ﾚﾊﾞｰ	1	A,B,C,D,H,J
19	C-52-11218-15161		SPRING,LH	ｽﾌﾟﾘﾝｸﾞ	1	A,B,C,D,H,J
20	C-52-11218-25161		SPRING,RH	ｽﾌﾟﾘﾝｸﾞ	1	A,B,C,D,H,J
21	C-52-11255-54010		SPRING	ｽﾌﾟﾘﾝｸﾞ	2	A,B,C,D,H,J
22	C-52-11242-54010		SPRING	ｽﾌﾟﾘﾝｸﾞ	2	A,B,C,D,H,J
23	C-52-11246-54071		SPRING	ｽﾌﾟﾘﾝｸﾞ	2	A,B,C,D,H,J
24	C-52-11255-14500		LEVER,LH	ﾚﾊﾞｰ	1	A,B,C,D,H,J
25	C-52-11255-24500		LEVER,RH	ﾚﾊﾞｰ	1	A,B,C,D,H,J
26	C-52-11255-14530		STRUT,LH	ｽﾄﾗｯﾄ	1	A,B,C,D,H,J
27	C-52-11255-24530		STRUT,RH	ｽﾄﾗｯﾄ	1	A,B,C,D,H,J
28	C-52-11232-54540		SPRING	ｽﾌﾟﾘﾝｸﾞ	2	A,B,C,D,H,J
29	C-52-11255-52350		BOLT & WASHER	ﾎﾞﾙﾄ&ﾜｯｼｬ	4	A,B,C,D,H,J
30	C-52-10901-64550		WASHER	ﾜｯｼｬ	2	A,B,C,D,H,J
31	C-52-10901-64560		RETAINER	ﾘﾃｰﾅ	2	A,B,C,D,H,J
32	C-52-11239-51270		PLATE	ﾌﾟﾚｰﾄ	2	A,B,C,D,H,J
33	C-52-51510-04160		PIN	ﾋﾟﾝ	4	A,B,C,D,H,J
34	C-52-81002-04131		CUP	ｶｯﾌﾟ	8	A,B,C,D,H,J
35	C-52-11255-54110		SPRING	ｽﾌﾟﾘﾝｸﾞ	4	A,B,C,D,H,J
36	C-52-11230-09010		COVER	ｶﾊﾞｰ	2	A,B,C,D,H,J
37	C-90-2300-1201		WASHER	ﾜｯｼｬ	2	A,B,C,D,H,J
38	C-52-11255-58990		PLATE,INDICATE	ﾌﾟﾚｰﾄ	2	A,B,C,D,H,J
39	C-90-9200-0800		RING,SNAP	ｽﾅｯﾌﾟﾘﾝｸﾞ	2	A,B,C,D,H,J
40	20803-71021		CABLE,PARKING,LH	ｹｰﾌﾞﾙ	1	A,B,C,D,H,J

FIG.61 WHEEL BRAKE

(F4043710) ホイールブレーキ

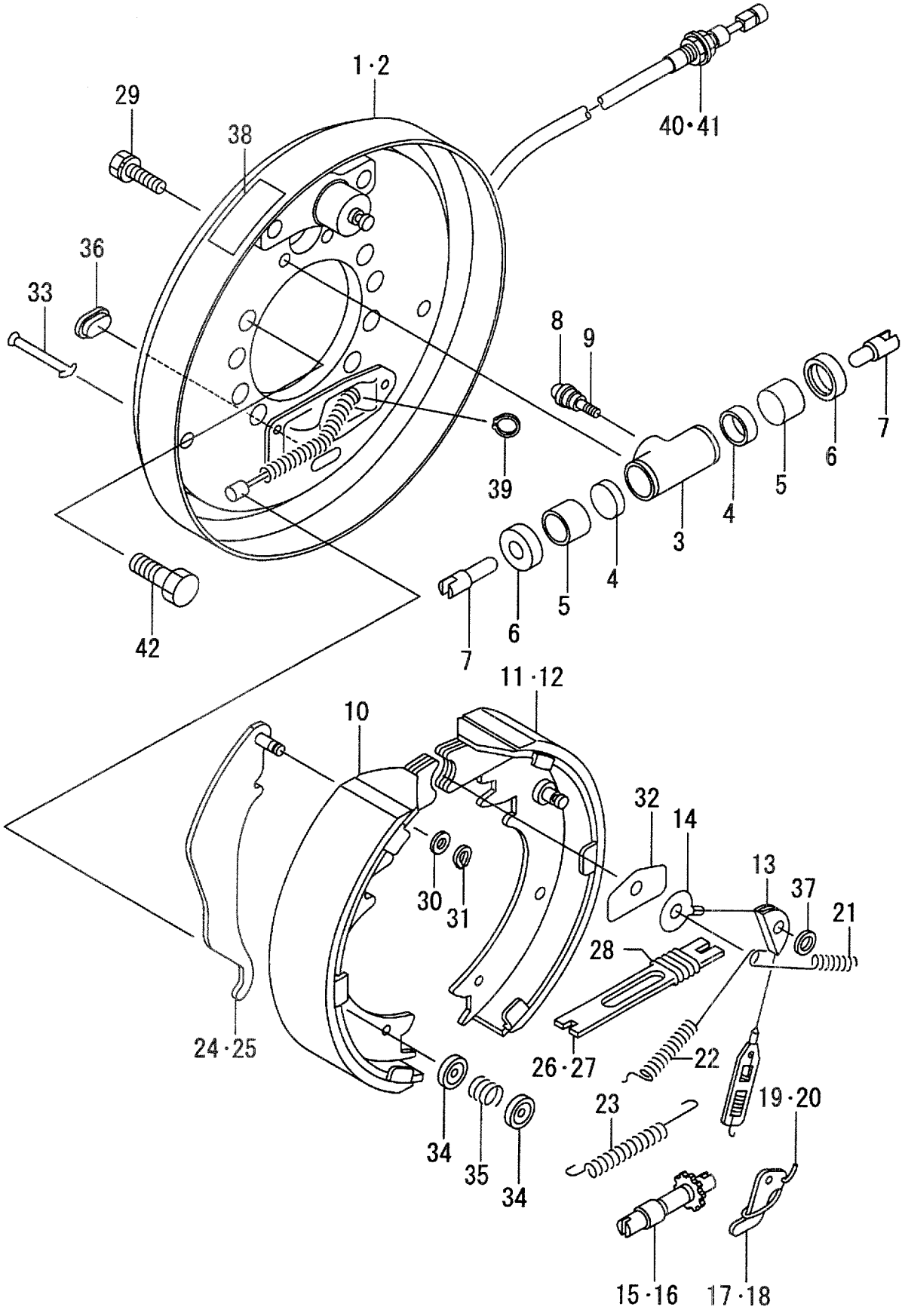

A:FD35C8:1-110 D:FD40T8:1-110 G:FD50T8 K:FG45T8
B:FD35T8:1-110 E:FD45C8 H:FG35T8:1-141 L:FG50T8
C:FD40C8:1-110 F:FD45T8 J:FG40T8:1-141

FIG.61
(F4043710)

Item No	Part No.	Mark	Description		Req'd	Remarks : Serial No.
41	20803-71011		CABLE,PARKING,RH	ｹｰﾌﾞﾙ	1	A,B,C,D,H,J
42	224W3-02051		BOLT,BACK-PLATE	ﾎﾞﾙﾄ	16	A,B,C,D,H,J
K1	C-K2-11239-52002		KIT,REPAIR,MAIN	ﾘﾍﾟｱｷｯﾄ	2	A,B,C,D,H,J INC.4-6
K2	C-K2-11218-02310		KIT,REPAIR,SUB	ﾘﾍﾟｱｷｯﾄ	2	A,B,C,D,H,J INC.4,6
K3	C-K2-11255-83012		KIT,SHOE,LH	ｼｭｰｷｯﾄ	1	A,B,C,D,H,J INC.10,11
K4	C-K2-11255-83022		KIT,SHOE,RH	ｼｭｰｷｯﾄ	1	A,B,C,D,H,J INC.10,12

FIG.61A WHEEL BRAKE

(F4043711) ホイールブレーキ

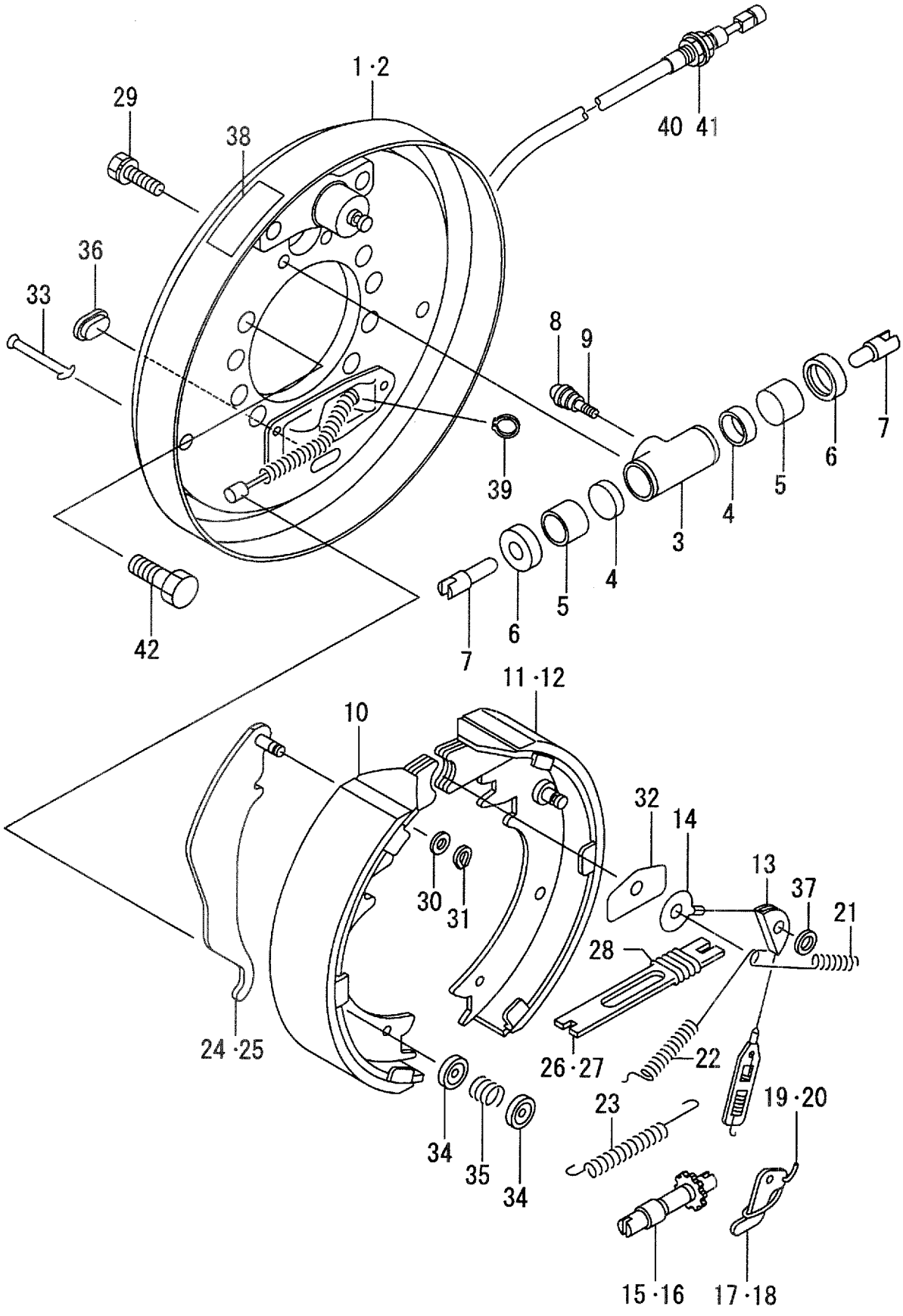

A:FD35C8:111- D:FD40T8:111- G:FD50T8 K:FG45T8
B:FD35T8:111- E:FD45C8 H:FG35T8:142- L:FG50T8
C:FD40C8:111- F:FD45T8 J:FG40T8:142-

FIG.61A
(F4043711)

Item No	Part No.	Mark	Description		Req'd	Remarks : Serial No.
A1	524W2-60211		BRAKE-ASSY,WHEEL,LH	ﾌﾞﾚｰｷｱｯｾﾝ	1	A,B,C,D,H,J
						INC.1-40
A2	524W2-60201		BRAKE-ASSY,WHEEL,RH	ﾌﾞﾚｰｷｱｯｾﾝ	1	A,B,C,D,H,J
						INC.1-39,41
1	C-52-11255-11002		PLATE,LH	ﾌﾟﾚｰﾄ	1	A,B,C,D,H,J
2	C-52-11255-21002		PLATE,RH	ﾌﾟﾚｰﾄ	1	A,B,C,D,H,J
A3	C-52-11255-52003		CYL-ASSY,WHEEL	ﾎｲｰﾙｼﾘﾝﾀﾞｱｯｾﾝ	2	A,B,C,D,H,J
						INC.3-7
3	NO PART NO.	#	CYLINDER	ｼﾘﾝﾀﾞ	2	A,B,C,D,H,J
4	NO PART NO.	#	CUP	ｶｯﾌﾟ	4	A,B,C,D,H,J
5	NO PART NO.	#	PISTON	ﾋﾟｽﾄﾝ	4	A,B,C,D,H,J
6	NO PART NO.	#	BOOT	ﾌﾞｰﾂ	4	A,B,C,D,H,J
7	NO PART NO.	#	LINK	ﾘﾝｸ	4	A,B,C,D,H,J
8	NO PART NO.	#	CAP,BLEADER	ｷｬｯﾌﾟ	2	A,B,C,D,H,J
9	NO PART NO.	#	SCREW	ｽｸﾘｭ	2	A,B,C,D,H,J
10	NO PART NO.	#	SHOE & LINING	ｼｭｰ&ﾗｲﾆﾝｸﾞ	2	A,B,C,D,H,J
11	NO PART NO.	#	SHOE,LINING & PIN,LH	ｼｭｰ	1	A,B,C,D,H,J
12	NO PART NO.	#	SHOE,LINING & PIN,RH	ｼｭｰ	1	A,B,C,D,H,J
13	C-52-11249-55310		GUIDE	ｶﾞｲﾄﾞ	2	A,B,C,D,H,J
14	20803-71101		SPRING & CABLE	ｽﾌﾟﾘﾝｸﾞ & ｹｰﾌﾞﾙ	2	A,B,C,D,H,J
15	C-52-11242-13300		ADJUSTER,LH	ｱｼﾞｬｽﾀ	1	A,B,C,D,H,J
16	C-52-11242-23300		ADJUSTER,RH	ｱｼﾞｬｽﾀ	1	A,B,C,D,H,J
17	C-52-11218-15151		LEVER,LH	ﾚﾊﾞｰ	1	A,B,C,D,H,J
18	C-52-11218-25151		LEVER,RH	ﾚﾊﾞｰ	1	A,B,C,D,H,J
19	C-52-11218-15161		SPRING,LH	ｽﾌﾟﾘﾝｸﾞ	1	A,B,C,D,H,J
20	C-52-11218-25161		SPRING,RH	ｽﾌﾟﾘﾝｸﾞ	1	A,B,C,D,H,J
21	C-52-11255-54010		SPRING	ｽﾌﾟﾘﾝｸﾞ	2	A,B,C,D,H,J
22	C-52-11242-54010		SPRING	ｽﾌﾟﾘﾝｸﾞ	2	A,B,C,D,H,J
23	C-52-11246-54071		SPRING	ｽﾌﾟﾘﾝｸﾞ	2	A,B,C,D,H,J
24	C-52-11255-14500		LEVER,LH	ﾚﾊﾞｰ	1	A,B,C,D,H,J
25	C-52-11255-24500		LEVER,RH	ﾚﾊﾞｰ	1	A,B,C,D,H,J
26	C-52-11255-14530		STRUT,LH	ｽﾄﾗｯﾄ	1	A,B,C,D,H,J
27	C-52-11255-24530		STRUT,RH	ｽﾄﾗｯﾄ	1	A,B,C,D,H,J
28	C-52-11232-54540		SPRING	ｽﾌﾟﾘﾝｸﾞ	2	A,B,C,D,H,J
29	C-52-11255-52350		BOLT & WASHER	ﾎﾞﾙﾄ&ﾜｯｼｬ	4	A,B,C,D,H,J
30	C-52-10901-64550		WASHER	ﾜｯｼｬ	2	A,B,C,D,H,J
31	C-52-10901-64560		RETAINER	ﾘﾃｰﾅ	2	A,B,C,D,H,J
32	C-52-11239-51270		GUIDE	ｶﾞｲﾄﾞ	2	A,B,C,D,H,J
33	C-52-51510-04160		PIN	ﾋﾟﾝ	4	A,B,C,D,H,J
34	C-52-81002-04131		CUP	ｶｯﾌﾟ	8	A,B,C,D,H,J
35	C-52-11255-54110		SPRING	ｽﾌﾟﾘﾝｸﾞ	4	A,B,C,D,H,J
36	C-52-11230-09010		COVER	ｶﾊﾞｰ	2	A,B,C,D,H,J
37	C-90-2300-1201		WASHER	ﾜｯｼｬ	2	A,B,C,D,H,J
38	C-52-11255-58990		PLATE,INDICATE	ﾌﾟﾚｰﾄ	2	A,B,C,D,H,J
39	C-90-9200-0800		RETAINER	ﾘﾃｰﾅ	2	A,B,C,D,H,J
40	20803-71021		CABLE,LH	ｹｰﾌﾞﾙ	1	A,B,C,D,H,J
41	20803-71011		CABLE,RH	ｹｰﾌﾞﾙ	1	A,B,C,D,H,J
42	224W3-02051		BOLT	ﾎﾞﾙﾄ	16	A,B,C,D,H,J
K1	C-K2-11239-52002		KIT,REPAIR,MAIN	ﾘﾍﾟｱｰｷｯﾄ	2	A,B,C,D,H,J
						INC.4-6

FIG.61A WHEEL BRAKE

(F4043711) ホイールブレーキ

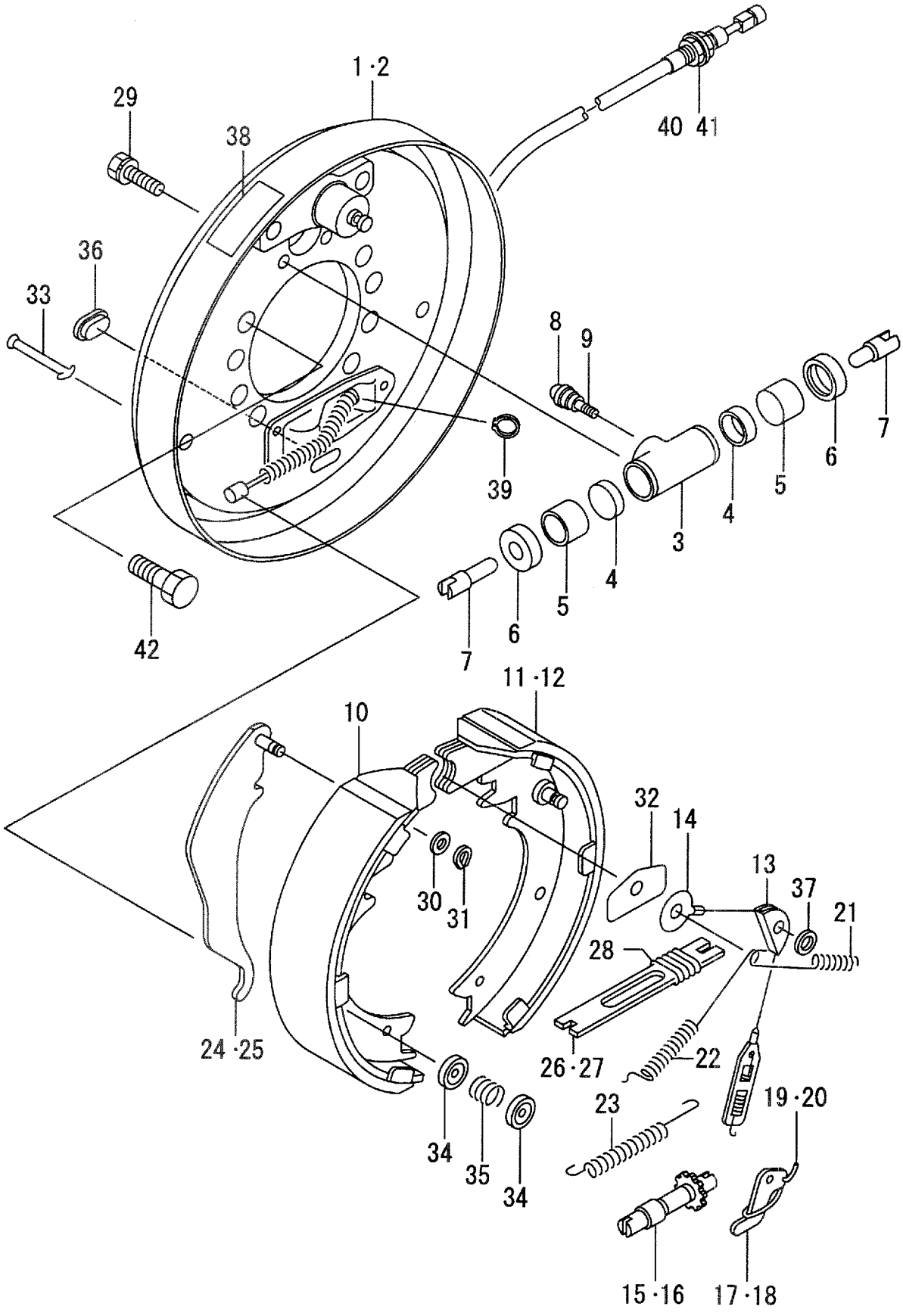

A:FD35C8:111- D:FD40T8:111- G:FD50T8 K:FG45T8
B:FD35T8:111- E:FD45C8 H:FG35T8:142- L:FG50T8
C:FD40C8:111- F:FD45T8 J:FG40T8:142-

FIG.61A
(F4043711)

Item No	Part No.	Mark	Description	Req'd	Remarks : Serial No.
K2	C-K2-11218-02310		KIT,REPAIR,SUB リペアキット	2	A,B,C,D,H,J INC.4,6
K3	C-K2-11255-83013		KIT,SHOE,LH シューキット	1	A,B,C,D,H,J INC.10,11
K4	C-K2-11255-83023		KIT,SHOE,RH シューキット	1	A,B,C,D,H,J INC.10,12

FIG.62 WHEEL BRAKE

(F4043720) ホイールブレーキ

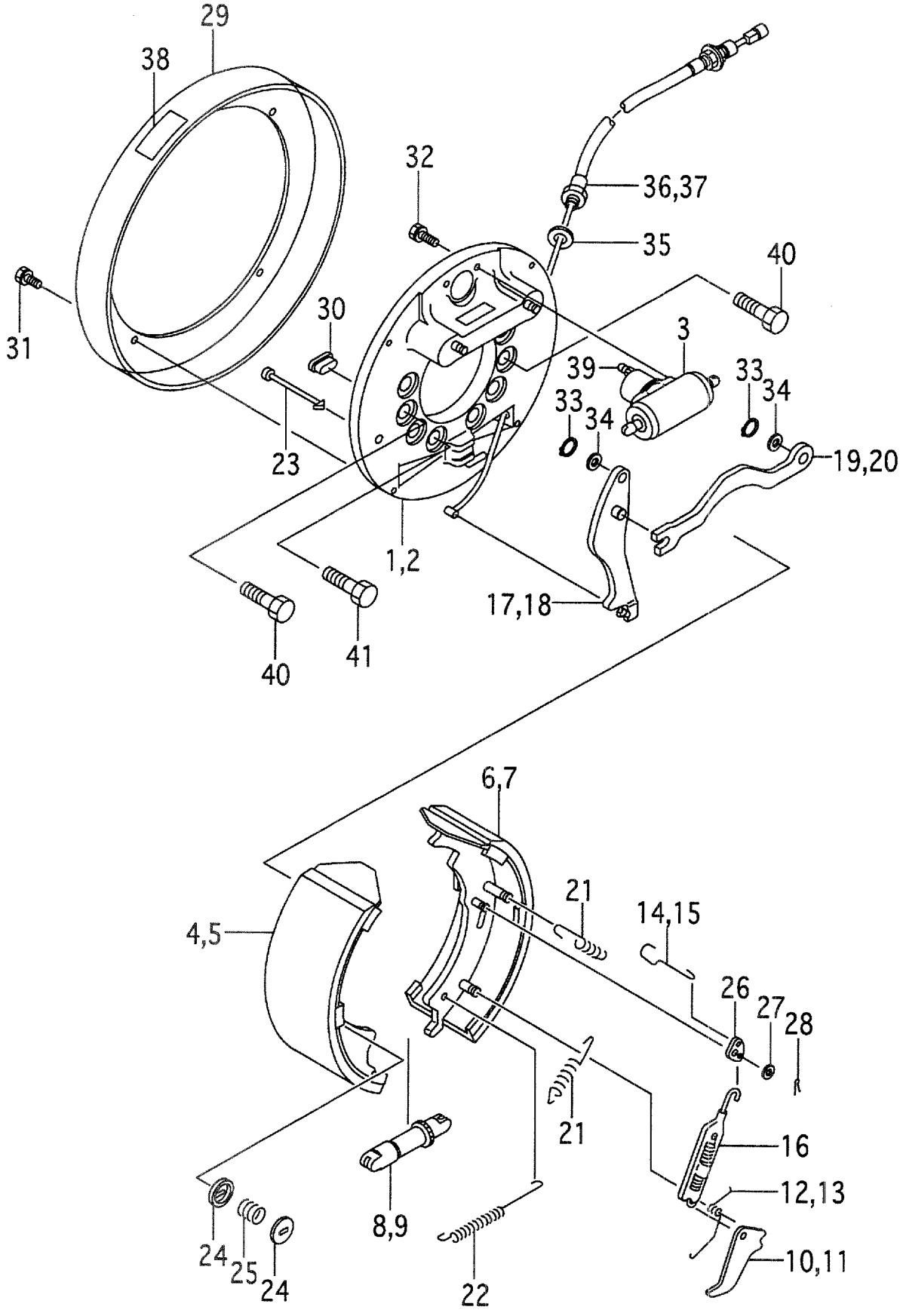

A:FD35C8 D:FD40T8 G:FD50T8 K:FG45T8
B:FD35T8 E:FD45C8 H:FG35T8 L:FG50T8
C:FD40C8 F:FD45T8 J:FG40T8

FIG.62
(F4043720)

Item No	Part No.	Mark	Description		Req'd	Remarks : Serial No.
A1	235F3-72111		BRAKE-ASSY,WHEEL,LH	ﾎｲｰﾙﾌﾞﾚｰｷｱｯｾﾝ	1	E,F,G,K,L INC.1-38
A2	235F3-72011		BRAKE-ASSY,WHEEL,RH	ﾎｲｰﾙﾌﾞﾚｰｷｱｯｾﾝ	1	E,F,G,K,L INC.1-38
1	C-52-11252-11000		BACK-PLATE,LH	ﾊﾞｯｸﾌﾟﾚｰﾄ	1	E,F,G,K,L
2	C-52-11252-21000		BACK-PLATE,RH	ﾊﾞｯｸﾌﾟﾚｰﾄ	1	E,F,G,K,L
3	C-52-11252-52002		CYLINDER	ｼﾘﾝﾀﾞｰ	2	E,F,G,K,L
4	NO PART NO.	#*	SHOE,LINING & PIN,LH	ｼｭｰ	1	E,F,G,K,L
5	NO PART NO.	#*	SHOE,LINING & PIN,RH	ｼｭｰ	1	E,F,G,K,L
6	NO PART NO.	#*	SHOE,LINING & PIN,LH	ｼｭｰ	1	E,F,G,K,L
7	NO PART NO.	#*	SHOE,LINING & PIN,RH	ｼｭｰ	1	E,F,G,K,L
8	C-52-11254-13300		ADJUSTER,LH	ｱｼﾞｬｽﾀ	1	E,F,G,K,L
9	C-52-11254-23300		ADJUSTER,RH	ｱｼﾞｬｽﾀ	1	E,F,G,K,L
10	C-52-11218-15151		LEVER,LH	ﾚﾊﾞｰ	1	E,F,G,K,L
11	C-52-11218-25151		LEVER,RH	ﾚﾊﾞｰ	1	E,F,G,K,L
12	C-52-11254-15160		SPRING,LH	ｽﾌﾟﾘﾝｸﾞ	1	E,F,G,K,L
13	C-52-11254-25160		SPRING,RH	ｽﾌﾟﾘﾝｸﾞ	1	E,F,G,K,L
14	C-52-11252-15260		LINK,LH	ﾘﾝｸ	1	E,F,G,K,L
15	C-52-11252-25260		LINK,RH	ﾘﾝｸ	1	E,F,G,K,L
16	C-52-11252-55081		SPRING & LINK	ｽﾌﾟﾘﾝｸﾞ & ﾘﾝｸ	2	E,F,G,K,L
17	C-52-13207-14500		LEVER,LH	ﾚﾊﾞｰ	1	E,F,G,K,L
18	C-52-13207-24500		LEVER,RH	ﾚﾊﾞｰ	1	E,F,G,K,L
19	C-52-11252-14580		STRUT,LH	ｽﾄﾗｯﾄ	1	E,F,G,K,L
20	C-52-11252-24580		STRUT,RH	ｽﾄﾗｯﾄ	1	E,F,G,K,L
21	C-52-11254-54030		SPRING	ｽﾌﾟﾘﾝｸﾞ	4	E,F,G,K,L
22	C-52-11252-54070		SPRING	ｽﾌﾟﾘﾝｸﾞ	2	E,F,G,K,L
23	C-52-51308-54160		PIN	ﾋﾟﾝ	4	E,F,G,K,L
24	C-52-81002-04131		CUP	ｶｯﾌﾟ	8	E,F,G,K,L
25	C-52-11254-54110		SPRING	ｽﾌﾟﾘﾝｸﾞ	4	E,F,G,K,L
26	C-52-11254-55270		LEVER	ﾚﾊﾞｰ	2	E,F,G,K,L
27	C-90-2300-0600		WASHER	ﾜｯｼｬ	2	E,F,G,K,L
28	C-90-3100-1615		PIN,COTTER	ﾋﾟﾝ	2	E,F,G,K,L
29	C-52-11252-59032		SHIELD	ｼｰﾙﾄﾞ	2	E,F,G,K,L
30	C-52-11230-09010		COVER	ｶﾊﾞｰ	2	E,F,G,K,L
31	C-90-0527-0612		SEMS	ｾﾝｽ	8	E,F,G,K,L
32	C-52-11252-52350		SEMS	ｾﾝｽ	4	E,F,G,K,L
33	C-52-10901-64560		RETAINER	ﾘﾃｰﾅ	4	E,F,G,K,L
34	C-52-10901-64550		WASHER	ﾜｯｼｬ	4	E,F,G,K,L
35	C-90-2120-1400		WASHER	ﾜｯｼｬ	2	E,F,G,K,L
36	C-52-11252-14601		CABLE,PARKING,LH	ｹｰﾌﾞﾙ	1	E,F,G,K,L
37	C-52-11252-24601		CABLE,PARKING,RH	ｹｰﾌﾞﾙ	1	E,F,G,K,L
38	C-52-11252-58990		PLATE,INDICATE	ﾌﾟﾚｰﾄ	2	E,F,G,K,L
39	C-51-B2101-02322		BREATHER,AIR	ﾌﾞﾘｰｻﾞ	1	E,F,G,K,L
40	228A3-72001		BOLT,REAMER	ﾎﾞﾙﾄ	4	E,F,G,K,L
41	228A3-72011		BOLT,BACK-PLATE	ﾎﾞﾙﾄ	12	E,F,G,K,L
K1	C-K2-11254-52204		KIT,REPAIR,MAIN	ﾘﾍﾟｱｰｷｯﾄ	2	E,F,G,K,L
K2	C-K2-11252-52311		KIT,REPAIR,SUB	ﾘﾍﾟｱｷｯﾄ	2	E,F,G,K,L
K3	C-K2-11252-73013		KIT,SHOE,LH	ｼｭｰｷｯﾄ	1	E,F,G,K,L INC.4,6

FIG.62 WHEEL BRAKE

(F4043720) ホイールブレーキ

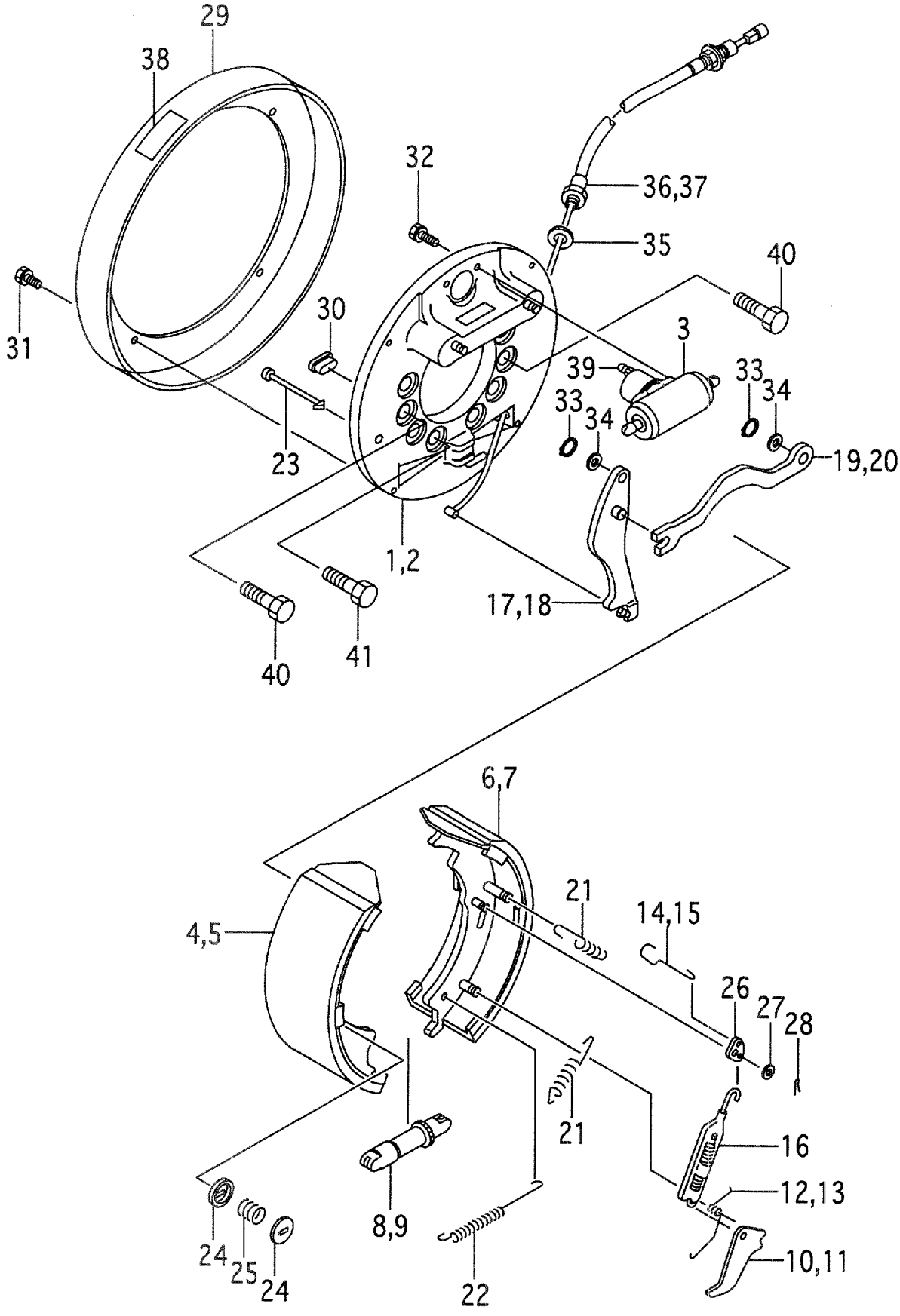

A:FD35C8 D:FD40T8 G:FD50T8 K:FG45T8
B:FD35T8 E:FD45C8 H:FG35T8 L:FG50T8
C:FD40C8 F:FD45T8 J:FG40T8

FIG.62
(F4043720)

Item No	Part No.	Mark	Description	Req'd	Remarks : Serial No.
K4	C-K2-11252-73023		KIT,SHOE,RH シューキット	1	E,F,G,K,L INC.5,7

FIG.63 F/R SWITCH

(F4043910) F/Rスイッチ

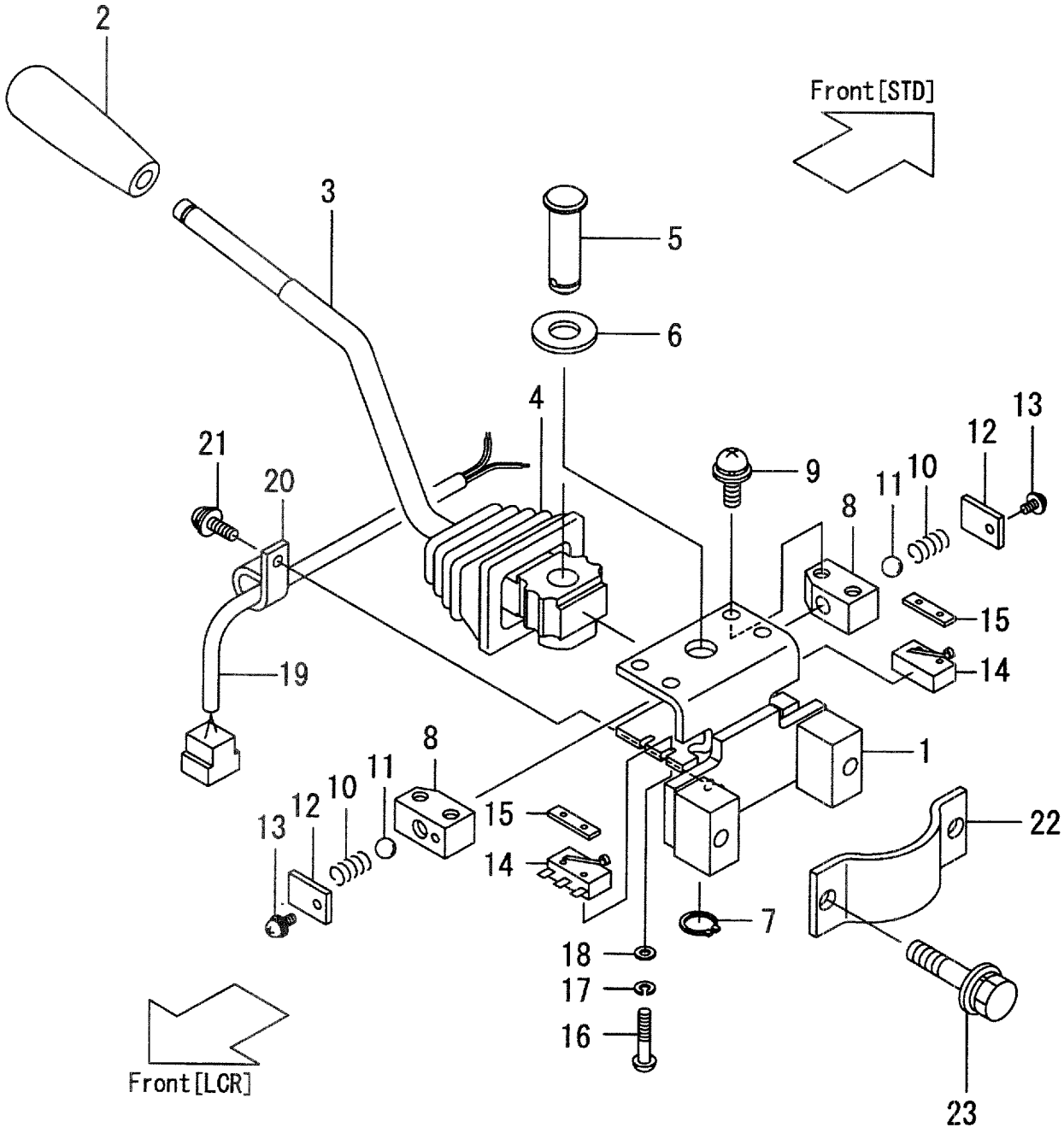

A:FD35C8 D:FD40T8 G:FD50T8 K:FG45T8
B:FD35T8 E:FD45C8 H:FG35T8 L:FG50T8
C:FD40C8 F:FD45T8 J:FG40T8

FIG.63
(F4043910)

Item No	Part No.	Mark	Description		Req'd	Remarks : Serial No.
A1	230C2-40411		SWITCH-ASSY,F/R	FRｽｲｯﾁｱｯｾﾝ	1	B,D,F,G,H,J,K,L INC.1-23
-	530C2-60191		SWITCH-ASSY,F/R	FRｽｲｯﾁｱｯｾﾝ	1	B,D,F,G,H,J,K,L [EXN] INC.1-23
-	230C2-40401		SWITCH-ASSY,F/R	FRｽｲｯﾁｱｯｾﾝ	1	B,D,F,G,H,J,K,L [LCR] INC.1-23
-	530C2-60181		SWITCH-ASSY,F/R	FRｽｲｯﾁｱｯｾﾝ	1	B,D,F,G,H,J,K,L [EXN/LCR] INC.1-23
1	277H2-62101		BASE	ﾍﾞｰｽ	1	B,D,F:1-256 G:1-132 H,J,K:1-107 L:1-102
-	277H2-62102		BASE	ﾍﾞｰｽ	1	B,D,F:257- G:133- H,J,K:108- L:103-
A2	277H2-62081		LEVER-ASSY	ﾚﾊﾞｰｱｯｾﾝ	1	B,D,F:1-256 G:1-132 H,J,K:1-107 L:1-102 INC.2-4
-	277H2-62082		LEVER-ASSY	ﾚﾊﾞｰｱｯｾﾝ	1	B,D,F:257- G:133- H,J,K:108- L:103- INC.2-4
-	530C2-60171		LEVER-ASSY	ﾚﾊﾞｰｱｯｾﾝ	1	B,D,F:1-256 G:1-132 H,J,K:1-107 L:1-102 [EXN][EXN/LCR] INC.2-4
-	530C2-60172		LEVER-ASSY	ﾚﾊﾞｰｱｯｾﾝ	1	B,D,F:257- G:133- H,J,K:108- L:103- [EXN][EXN/LCR] INC.2-4
2	277H2-62271		KNOB	ﾉﾌﾞ	1	B,D,F,G,H,J,K,L
3	277H2-62091		LEVER	ﾚﾊﾞｰ	1	B,D,F:1-256 G:1-132 H,J,K:1-107 L:1-102
-	277H2-62092		LEVER	ﾚﾊﾞｰ	1	B,D,F:257- G:133- H,J,K:108- L:103-
-	530C2-60161		LEVER	ﾚﾊﾞｰ	1	B,D,F:1-256 G:1-132 H,J,K:1-107 L:1-102 [EXN][EXN/LCR]

FIG.63 F/R SWITCH

(F4043910) F/Rスイッチ

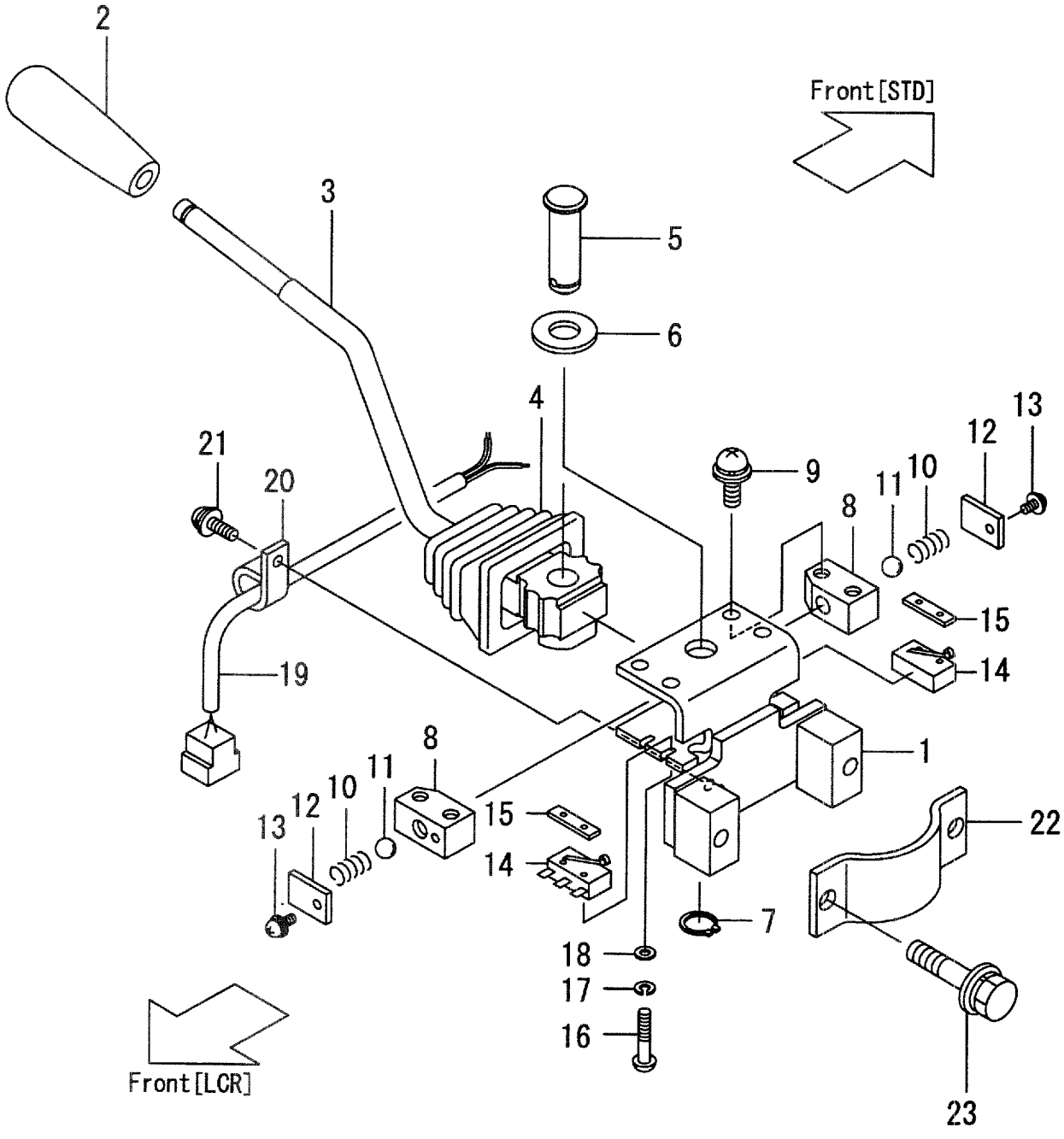

A:FD35C8 D:FD40T8 G:FD50T8 K:FG45T8
B:FD35T8 E:FD45C8 H:FG35T8 L:FG50T8
C:FD40C8 F:FD45T8 J:FG40T8

FIG.63
(F4043910)

Item No	Part No.	Mark	Description		Req'd	Remarks : Serial No.
-	530C2-60162		LEVER	ﾚﾊﾞｰ	1	B,D,F:257- G:133- H,J,K:108- L:103- [EXN][EXN/LCR]
4	277H2-62291		BOOT	ﾌﾞｰﾂ	1	B,D,F,G,H,J,K,L
5	277H2-62151		SHAFT	ｼｬﾌﾄ	1	B,D,F,G,H,J,K,L
6	02000-00010		WASHER	ﾜｯｼｬ	1	B,D,F,G,H,J,K,L
7	02100-00010		RING,SNAP	ｽﾅｯﾌﾟﾘﾝｸﾞ	1	B,D,F,G,H,J,K,L
8	277H2-62171		HOLDER	ﾎﾙﾀﾞ	2	B,D,F:1-256 G:1-132 H,J,K:1-107 L:1-102
-	277H2-62172		HOLDER	ﾎﾙﾀﾞ	2	B,D,F:257- G:133- H,J,K:108- L:103-
9	173A2-65121		SCREW	ｽｸﾘｭ	4	B,D,F,G,H,J,K,L
10	277H2-62181		SPRING	ｽﾌﾟﾘﾝｸﾞ	2	B,D,F,G,H,J,K,L
11	03190-99060		BALL	ﾎﾞｰﾙ	2	B,D,F,G,H,J,K,L
12	277H2-62261		PLATE	ﾌﾟﾚｰﾄ	2	B,D,F,G,H,J,K,L
13	27042-63661		SCREW	ｽｸﾘｭ	2	B,D,F,G,H,J,K,L
14	277H2-62191		SWITCH	ｽｲｯﾁ	2	B,D,F,G,H,J,K,L
15	277H2-62201		RETAINER	ﾘﾃｰﾅ	2	B,D,F,G,H,J,K,L
16	01030-02012		SCREW	ｽｸﾘｭ	4	B,D,F,G,H,J,K,L
17	02010-00002		WASHER	ﾜｯｼｬ	4	B,D,F,G,H,J,K,L
18	02000-00002		WASHER	ﾜｯｼｬ	4	B,D,F,G,H,J,K,L
19	230C2-42031		WIRE-HARNESS	ﾜｲﾔﾊｰﾈｽ	1	B,D,F,G,H,J,K,L
20	27042-63291		CLAMP	ｸﾗﾝﾌﾟ	1	B,D,F,G,H,J,K,L
21	27042-63101		SCREW	ｽｸﾘｭ	1	B,D,F,G,H,J,K,L
22	277H2-62251		PLATE	ﾌﾟﾚｰﾄ	1	B,D,F,G,H,J,K,L
23	01185-06025		BOLT	ﾎﾞﾙﾄ	2	B,D,F,G,H,J,K,L

FIG.64 STEERING WHEEL UNIT

(F4044110) ステアリング゛ホイールユニット

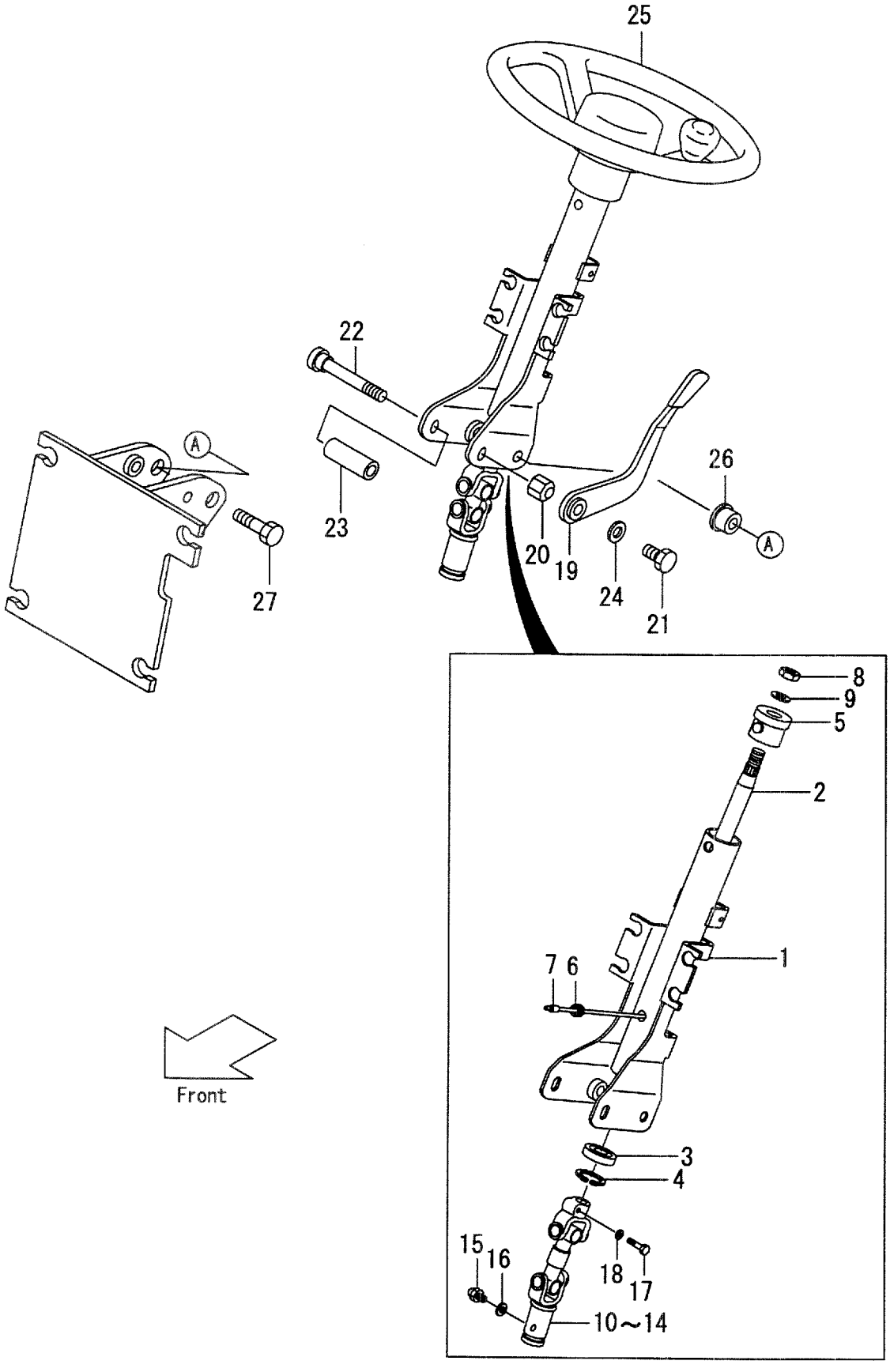

A:FD35C8 D:FD40T8 G:FD50T8 K:FG45T8
B:FD35T8 E:FD45C8 H:FG35T8 L:FG50T8
C:FD40C8 F:FD45T8 J:FG40T8

FIG.64
(F4044110)

Item No	Part No.	Mark	Description		Req'd	Remarks : Serial No.
A1	116G4-10012		SHAFT&JOINT-ASSY,STEERING	シャフト&ジョイントアッセン	1	A,B,C,D,E,F:1-2056 G:1-426 H,J,K:1-333 L:1-118 INC.1-18
-	116G4-10013		SHAFT&JOINT-ASSY,STEERING	シャフト&ジョイントアッセン	1	A,B,C,D,E,F:2057- G:427- H,J,K:334- L:119- INC.1-18
-	535C2-60301		SHAFT&JOINT-ASSY,STEERING	シャフト&ジョイントアッセン	1	A,B,C,D,E,F:1-2056 G:1-426 H,J,K:1-333 L:1-118 [OBT][EXN] INC.1-18
-	535C2-60302		SHAFT&JOINT-ASSY,STEERING	シャフト&ジョイントアッセン	1	A,B,C,D,E,F:2057- G:427- H,J,K:334- L:119- [OBT][EXN] INC.1-18
A2	116G4-10052		SHAFT-ASSY,STEERING	ステアリングシャフトアッセン	1	A,B,C,D,E,F:1-2056 G:1-426 H,J,K:1-333 L:1-118 INC.1-9
-	116G4-10053		SHAFT-ASSY,STEERING	ステアリングシャフトアッセン	1	A,B,C,D,E,F:2057- G:427- H,J,K:334- L:119- INC.1-9
-	535C2-62001		SHAFT-ASSY,STEERING	ステアリングシャフトアッセン	1	A,B,C,D,E,F:1-2056 G:1-426 H,J,K:1-333 L:1-118 [OBT][EXN] INC.1-9
-	535C2-62002		SHAFT-ASSY,STEERING	ステアリングシャフトアッセン	1	A,B,C,D,E,F:2057- G:427- H,J,K:334- L:119- [OBT][EXN] INC.1-9
1	NO PART NO.	#	COLUMN	コラム	1	
2	NO PART NO.	#	SHAFT	シャフト	1	
3	NO PART NO.	#	BEARING	ベアリング	1	
4	NO PART NO.	#	RING,SNAP	スナップリング	1	
5	114A4-12001		BUSHING	ブッシング	1	
6	114A4-12011		GROMMET	グロメット	1	
7	15594-12251		COVER	カバー	1	
8	01402-00014		NUT	ナット	1	
9	14354-12271		WASHER	ワッシャ	1	

FIG.64 STEERING WHEEL UNIT

(F4044110) ステアリング゛ホイールユニット

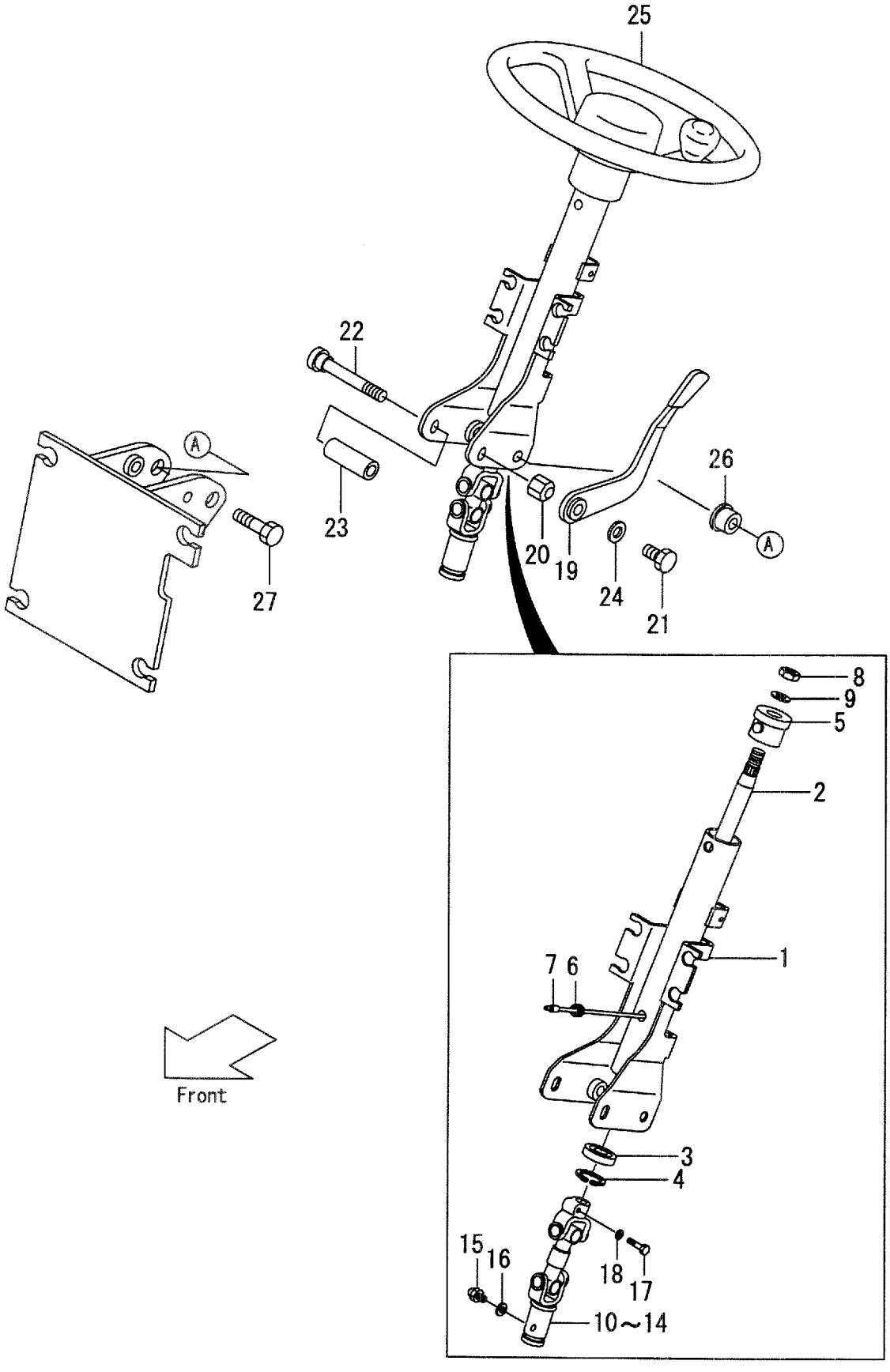

A:FD35C8 D:FD40T8 G:FD50T8 K:FG45T8
B:FD35T8 E:FD45C8 H:FG35T8 L:FG50T8
C:FD40C8 F:FD45T8 J:FG40T8

FIG.64
(F4044110)

Item No	Part No.	Mark	Description		Req'd	Remarks : Serial No.
A3	116G4-12052		JOINT-ASSY	ｼﾞｮｲﾝﾄｱｯｾﾝ	1	A,B,C,D,E,F:1-2056 G:1-426 H,J,K:1-333 L:1-118 INC.10-16
-	116G4-12053		JOINT-ASSY	ｼﾞｮｲﾝﾄｱｯｾﾝ	1	A,B,C,D,E,F:2057- G:427- H,J,K:334- L:119- INC.10-16
10	NO PART NO.	#	SHAFT	ｼｬﾌﾄ	1	
11	NO PART NO.	#	TUBE	ﾁｭｰﾌﾞ	1	
12	NO PART NO.	#	BEARING	ﾍﾞｱﾘﾝｸﾞ	8	
13	NO PART NO.	#	SPIDER	ｽﾊﾟｲﾀﾞ	2	
14	NO PART NO.	#	YOKE	ﾖｰｸ	1	
15	S-8340-236		FITTING	ﾌｨｯﾃｨﾝｸﾞ	1	
16	S-8206-010		WASHER	ﾜｯｼｬ	1	
17	S-8008-148		BOLT	ﾎﾞﾙﾄ	1	
18	S-8208-047		WASHER	ﾜｯｼｬ	1	
A4	216G4-10101		LEVER-ASSY,LOCK,TILT	ﾛｯｸﾚﾊﾞｰｱｯｾﾝ	1	INC.19-24
19	216G4-12171		LEVER	ﾚﾊﾞｰ	1	
20	216G4-12181		NUT	ﾅｯﾄ	1	
21	215E4-12231		BOLT	ﾎﾞﾙﾄ	1	
22	216G4-12151		BOLT	ﾎﾞﾙﾄ	1	
23	216G4-12161		COLLAR	ｶﾗｰ	1	
24	214A4-12161		WASHER	ﾜｯｼｬ	1	
25	NO PART NO.		WHEEL,STEERING	ﾎｲｰﾙ	1	SEE FIG.68
26	216G4-12101		BUSHING	ﾌﾞｯｼﾝｸﾞ	2	
27	216G4-12111		BOLT	ﾎﾞﾙﾄ	2	
28	530C2-62151	+	BOOT	ﾌﾞｰﾂ	1	[EXN]

GEAR BOX MOUNT

FIG.65 [JPN][PSS/(EXA,EXC,EXD,EXE,EXH,EXN)]

(F4044120) ｷﾞﾔｰﾎﾞｯｸｽﾏｳﾝﾄ

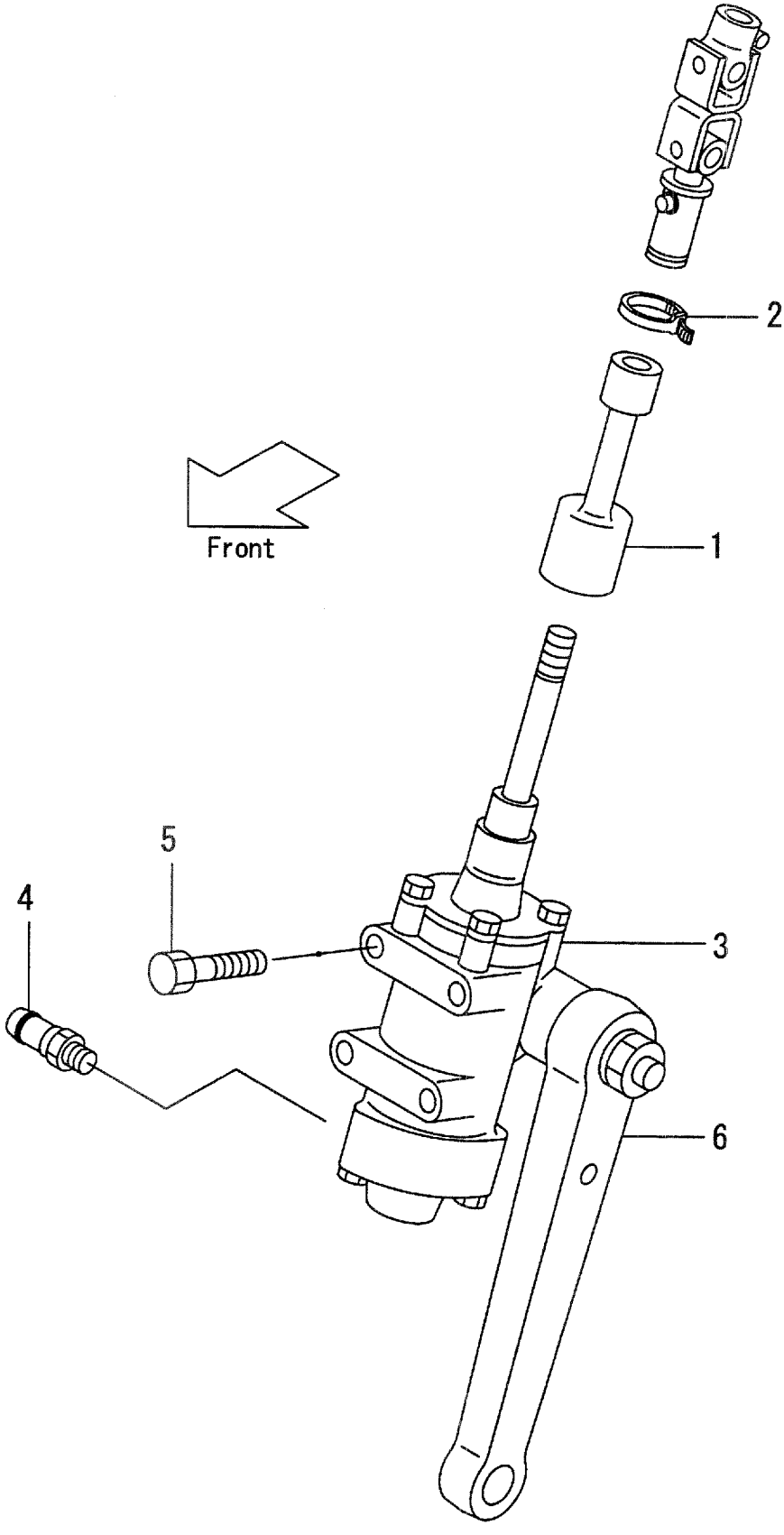

A:FD35C8 D:FD40T8 G:FD50T8 K:FG45T8
B:FD35T8 E:FD45C8 H:FG35T8 L:FG50T8
C:FD40C8 F:FD45T8 J:FG40T8

FIG.65
(F4044120)

Item No	Part No.	Mark	Description		Req'd	Remarks : Serial No.
1	216G4-12072		BOOT	ﾌﾞｰﾂ	1	
-	216G4-12072		BOOT	ﾌﾞｰﾂ	1	[PSS/EXA][PSS/EXC] [PSS/EXD][PSS/EXE] [PSS/EXN]
2	04913-11200		BAND	ﾊﾞﾝﾄﾞ	1	
-	04913-11200		BAND	ﾊﾞﾝﾄﾞ	1	[PSS/EXA][PSS/EXC] [PSS/EXD][PSS/EXE] [PSS/EXN]
3	130C4-10201		BOX,GEAR	ﾎﾞｯｸｽ	1	
-	130C4-10201		BOX,GEAR	ﾎﾞｯｸｽ	1	[PSS/EXA][PSS/EXC] [PSS/EXD][PSS/EXE] [PSS/EXN]
4	224W7-62051		FITTING	ﾌｨｯﾃｨﾝｸﾞ	1	
-	224W7-62051		FITTING	ﾌｨｯﾃｨﾝｸﾞ	1	[PSS/EXA][PSS/EXC] [PSS/EXD][PSS/EXE] [PSS/EXN]
-	524W4-12001		NIPPLE	ﾆｯﾌﾟﾙ	1	A,B,C,D,E,F,G
-	524W4-12001		NIPPLE	ﾆｯﾌﾟﾙ	1	A,B,C,D,E,F,G [PSS/EXA/CRH][PSS/EXC/CRH] [PSS/EXD/CRH]
-	524W4-12001		NIPPLE	ﾆｯﾌﾟﾙ	1	A,B,C,D,E,F,G [PSS/EXE/CRH][PSS/EXN/CRH]
5	216G4-12251		BOLT	ﾎﾞﾙﾄ	4	(OLD PART)
-	01184-12025		BOLT	ﾎﾞﾙﾄ	4	(NEW PART)
-	216G4-12251		BOLT	ﾎﾞﾙﾄ	4	[PSS/EXA][PSS/EXC] [PSS/EXD][PSS/EXE] [PSS/EXN](OLD)
-	01184-12025		BOLT	ﾎﾞﾙﾄ	4	[PSS/EXA][PSS/EXC] [PSS/EXD][PSS/EXE] [PSS/EXN](NEW)
6	230C4-22201		PITMAN-ARM	ﾋﾟｯﾄﾏﾝｱｰﾑ	1	
-	230C4-22201		PITMAN-ARM	ﾋﾟｯﾄﾏﾝｱｰﾑ	1	[PSS/EXA][PSS/EXC] [PSS/EXD][PSS/EXE] [PSS/EXN]

FIG.66 ORBITROL MOUNT [OBT]

(F4044130) オービットロールマウント

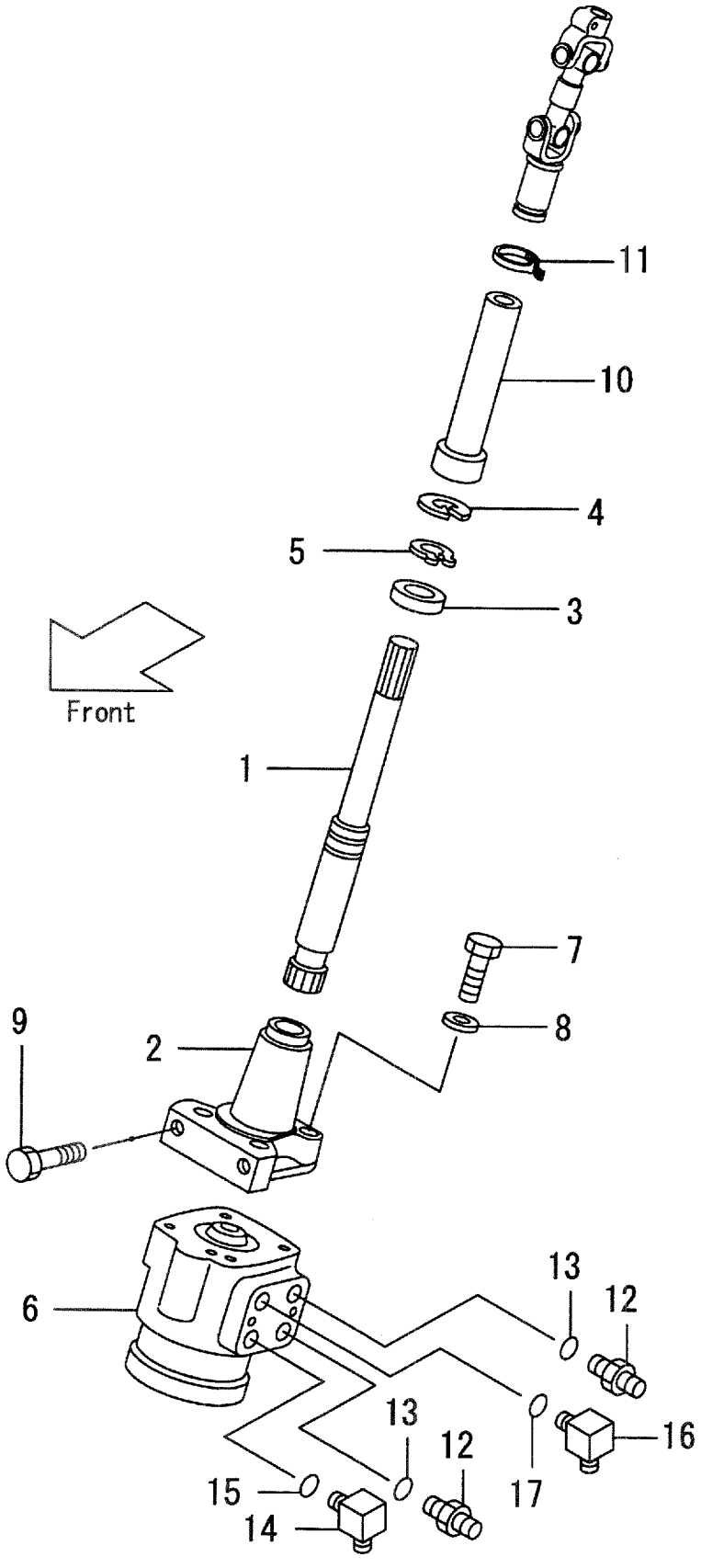

A:FD35C8 D:FD40T8 G:FD50T8 K:FG45T8
B:FD35T8 E:FD45C8 H:FG35T8 L:FG50T8
C:FD40C8 F:FD45T8 J:FG40T8

FIG.66
(F4044130)

Item No	Part No.	Mark	Description		Req'd	Remarks : Serial No.
A1	534A2-40202		SHAFT-ASSY,STEERING	ｽﾃｱﾘﾝｸﾞｼｬﾌﾄｱｯｾﾝ	1	[OBT] INC.1-5
1	534A2-42001		SHAFT	ｼｬﾌﾄ	1	[OBT]
2	534A2-42012		FLANGE	ﾌﾗﾝｼﾞ	1	[OBT]
3	03010-06904		BEARING	ﾍﾞｱﾘﾝｸﾞ	1	[OBT]
4	02110-00037		RING,SNAP	ｽﾅｯﾌﾟﾘﾝｸﾞ	1	[OBT]
5	02100-00020		RING,SNAP	ｽﾅｯﾌﾟﾘﾝｸﾞ	2	[OBT]
6	524W2-40252		ORBITROL	ｵｰﾋﾞｯﾄﾛｰﾙ	1	[OBT]SEE FIG.67
7	80110-00628		BOLT	ﾎﾞﾙﾄ	4	[OBT]
8	80430-00006		WASHER	ﾜｯｼｬ	4	[OBT]
9	534A2-42031		BOLT	ﾎﾞﾙﾄ	2	[OBT]
10	534A2-42021		BOOTS	ﾌﾞｰﾂ	1	[OBT]
11	04913-11200		BAND	ﾊﾞﾝﾄﾞ	1	[OBT]
A2	22197-60231		NIPPLE-ASSY	ﾆｯﾌﾟﾙｱｯｾﾝ	2	[OBT] INC.12,13
12	NO PART NO.	#	NIPPLE	ﾆｯﾌﾟﾙ	2	[OBT]
13	89140-00006		O-RING	Oﾘﾝｸﾞ	2	[OBT]
A3	23307-60301		ELBOW-ASSY	ｴﾙﾎﾞｱｯｾﾝ	1	[OBT] INC.14,15
14	NO PART NO.	#	ELBOW	ｴﾙﾎﾞ	1	[OBT]
15	89140-00006		O-RING	Oﾘﾝｸﾞ	1	[OBT]
A4	524W2-40531		FITTING-ASSY	ﾌｨｯﾃｨﾝｸﾞｱｯｾﾝ	1	[OBT] INC.16,17
A5	23457-60331		ELBOW-ASSY	ｴﾙﾎﾞｱｯｾﾝ	1	A,B,C,D,E,F,G [EX/CRH] INC.16,17
16	524W2-42531		FITTING	ﾌｨｯﾃｨﾝｸﾞ	1	[OBT]
-	23457-62141		ELBOW	ｴﾙﾎﾞ	1	A,B,C,D,E,F,G [EX/CRH]
17	89140-00006		O-RING	Oﾘﾝｸﾞ	1	[OBT]

FIG.67 ORBITROL [OBT]

(F4044140) オービットロール

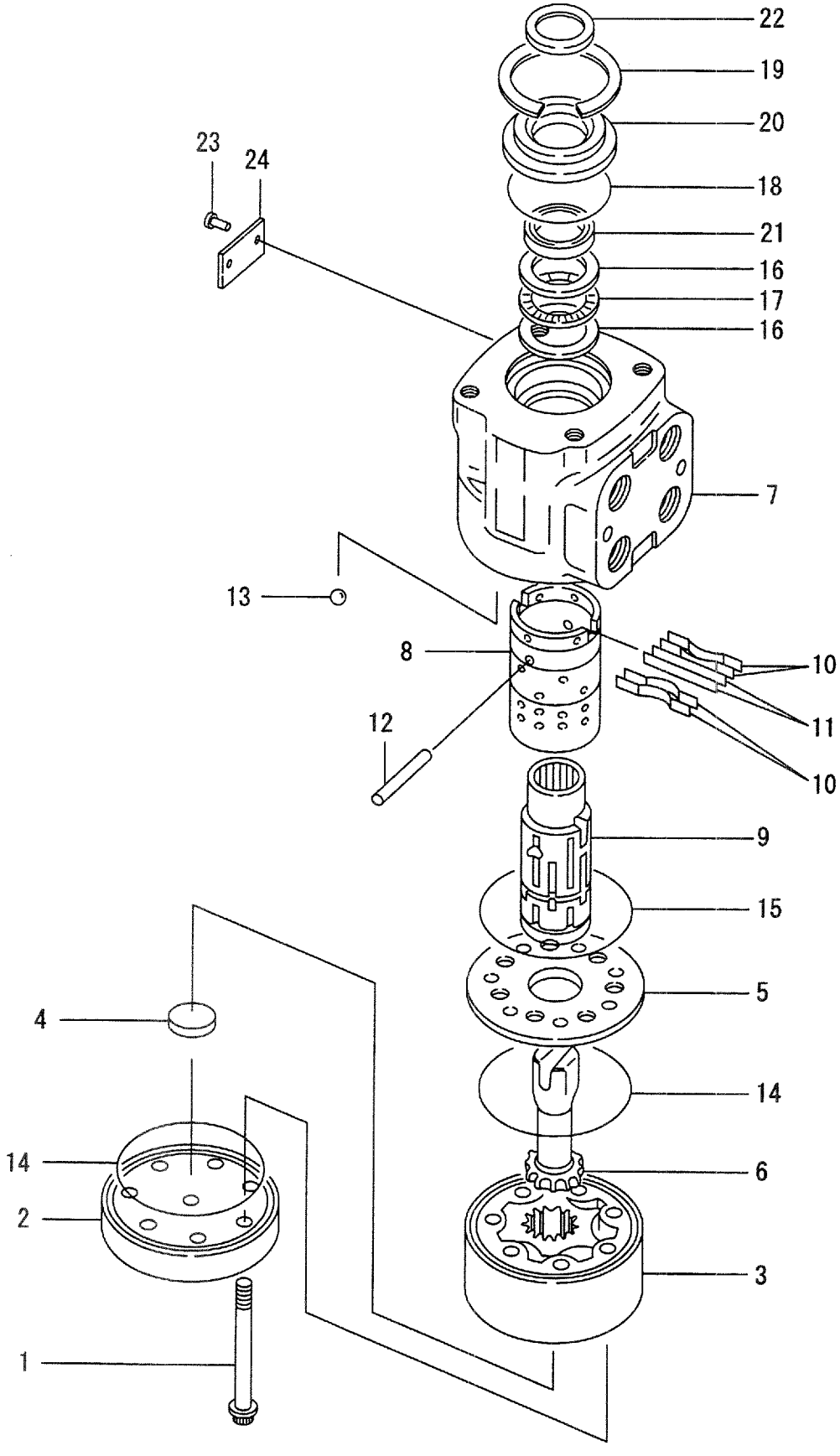

A:FD35C8 D:FD40T8 G:FD50T8 K:FG45T8
B:FD35T8 E:FD45C8 H:FG35T8 L:FG50T8
C:FD40C8 F:FD45T8 J:FG40T8

FIG.67
(F4044140)

Item No	Part No.	Mark	Description		Req'd	Remarks : Serial No.
A1	524W2-40252		UNIT-ASSY,ORBITROL	オービットロールユニットアッセン	1	[OBT] INC.1-26
1	524W2-42601		SCREW	スクリュ	6	[OBT]
2	26094-17141		CAP,END	キャップ	1	[OBT]
3	524W2-42611		ROTOR	ロータ	1	[OBT]
4	524W2-42621		SPACER	スペーサ	1	[OBT]
5	26094-17101		PLATE,SPACER	プレート	1	[OBT]
6	26094-17111		SHAFT,DRIVE	シャフト	1	[OBT]
A2	524W2-42661		PARTS-ASSY,CONTROL	コントロールパーツアッセン	1	[OBT] INC.7-9
7	NO PART NO.	#	HOUSING	ハウジング	1	[OBT]
8	NO PART NO.	#	SLEEVE	スリーブ	1	[OBT]
9	NO PART NO.	#	SPOOL	スプール	1	[OBT]
10	26094-17081		SPRING	スプリング	4	[OBT]
11	26314-17021		SPRING,FLAT	スプリング	2	[OBT]
12	26094-17091		PIN	ピン	1	[OBT]
13	524W2-42651		BALL	ボール	1	[OBT]
14	NO PART NO.	*	O-RING	Oリング	2	[OBT]
15	NO PART NO.	*	O-RING	Oリング	1	[OBT]
16	NO PART NO.	*	RACE,BRG	レース	2	[OBT]
17	NO PART NO.	*	BEARING	ベアリング	1	[OBT]
18	NO PART NO.	*	O-RING	Oリング	1	[OBT]
19	26094-17001		RING,RETAINING	リング	1	[OBT]
20	26314-17001		BUSHING	ブッシング	1	[OBT]
21	NO PART NO.	*	SEAL,OIL	シール	1	[OBT]
22	NO PART NO.	*	SEAL,DUST	シール	1	[OBT]
23	NO PART NO.		RIVET	リベット	2	[OBT]
24	NO PART NO.		PLATE,NAME	プレート	1	[OBT]
25	NO PART NO.	+	RETAINER,SCREW	リテーナ	1	[OBT]
26	NO PART NO.	+	ADAPTER,SCREW	アダプタ	1	[OBT]
K1	26094-17021		KIT,BRG,NEEDLE	ニードルベアリングキット	1	[OBT] INC.16,17
K2	524W2-42671		KIT,SEAL	シールキット	1	[OBT] INC.14,15,18,21,22

FIG.68 STEERING WHEEL

(F4044150) ステアリング ホイール

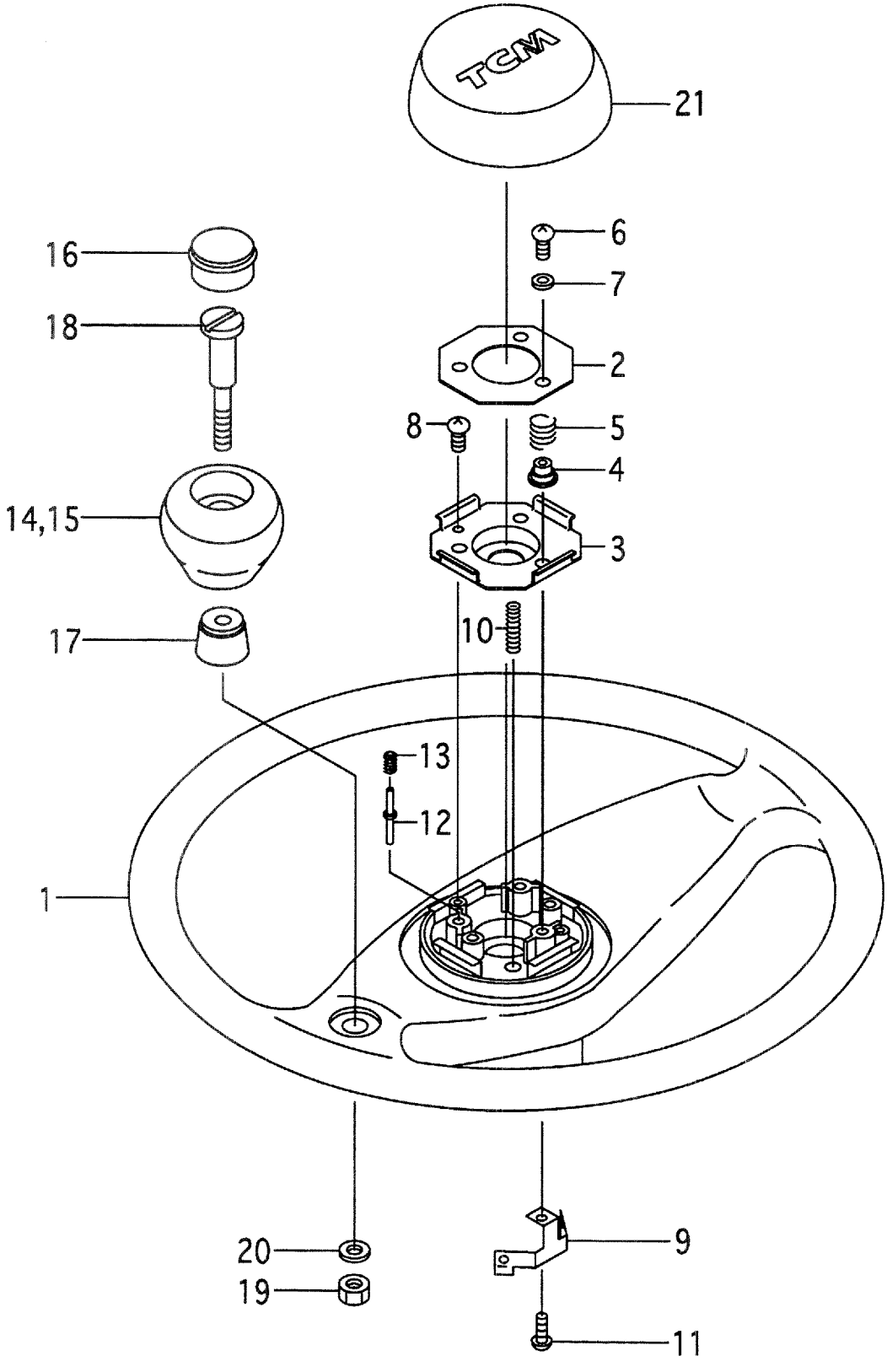

A:FD35C8 D:FD40T8 G:FD50T8 K:FG45T8
B:FD35T8 E:FD45C8 H:FG35T8 L:FG50T8
C:FD40C8 F:FD45T8 J:FG40T8

FIG.68
(F4044150)

Item No	Part No.	Mark	Description		Req'd	Remarks : Serial No.
A1	216G4-10201		WHEEL-ASSY,STEERING	ｽﾃｱﾘﾝｸﾞﾎｲｰﾙｱｯｾﾝ	1	INC.1-21
1	NO PART NO.	#	WHEEL	ﾎｲｰﾙ	1	
A2	216G4-12571		SWITCH-ASSY	ｽｲｯﾁｱｯｾﾝ	1	INC.2-7
2	NO PART NO.	#	PLATE-A	ﾌﾟﾚｰﾄ	1	
3	NO PART NO.	#	PLATE-B	ﾌﾟﾚｰﾄ	1	
4	216G4-12601		INSULATOR	ｲﾝｼｭﾚｰﾀ	3	
5	216G4-12611		SPRING	ｽﾌﾟﾘﾝｸﾞ	3	
6	216G4-12621		SCREW	ｽｸﾘｭ	3	
7	216G4-12631		WASHER	ﾜｯｼｬ	3	
8	216G4-12641		SCREW	ｽｸﾘｭ	2	
9	216G4-12651		BRUSH	ﾌﾞﾗｼ	1	
10	216G4-12661		SPRING	ｽﾌﾟﾘﾝｸﾞ	1	
11	216G4-12671		SCREW	ｽｸﾘｭ	1	
12	271F4-12231		PLUNGER	ﾌﾟﾗﾝｼﾞｬ	1	
13	271F4-12241		SPRING	ｽﾌﾟﾘﾝｸﾞ	1	
A3	216G4-12681		KNOB-ASSY	ﾉﾌﾞｱｯｾﾝ	1	INC.14-20
14	NO PART NO.	#	KNOB	ﾉﾌﾞ	1	
15	NO PART NO.	#	INSERT	ｲﾝｻｰﾄ	1	
16	216G4-12711		CAP	ｷｬｯﾌﾟ	1	
17	NO PART NO.	#	BUSHING	ﾌﾞｯｼﾝｸﾞ	1	
18	NO PART NO.	#	SHAFT	ｼｬﾌﾄ	1	
19	216G4-12741		NUT	ﾅｯﾄ	1	
20	216G4-12751		WASHER	ﾜｯｼｬ	1	
21	216G4-12761		PAD	ﾊﾟｯﾄﾞ	1	

FIG.69 DRAG LINK [JPN][PSS/(EXA,EXC,EXD,EXE,EXH,EXN)]

(F4044210) ﾄﾞﾗｯｸﾞﾘﾝｸ

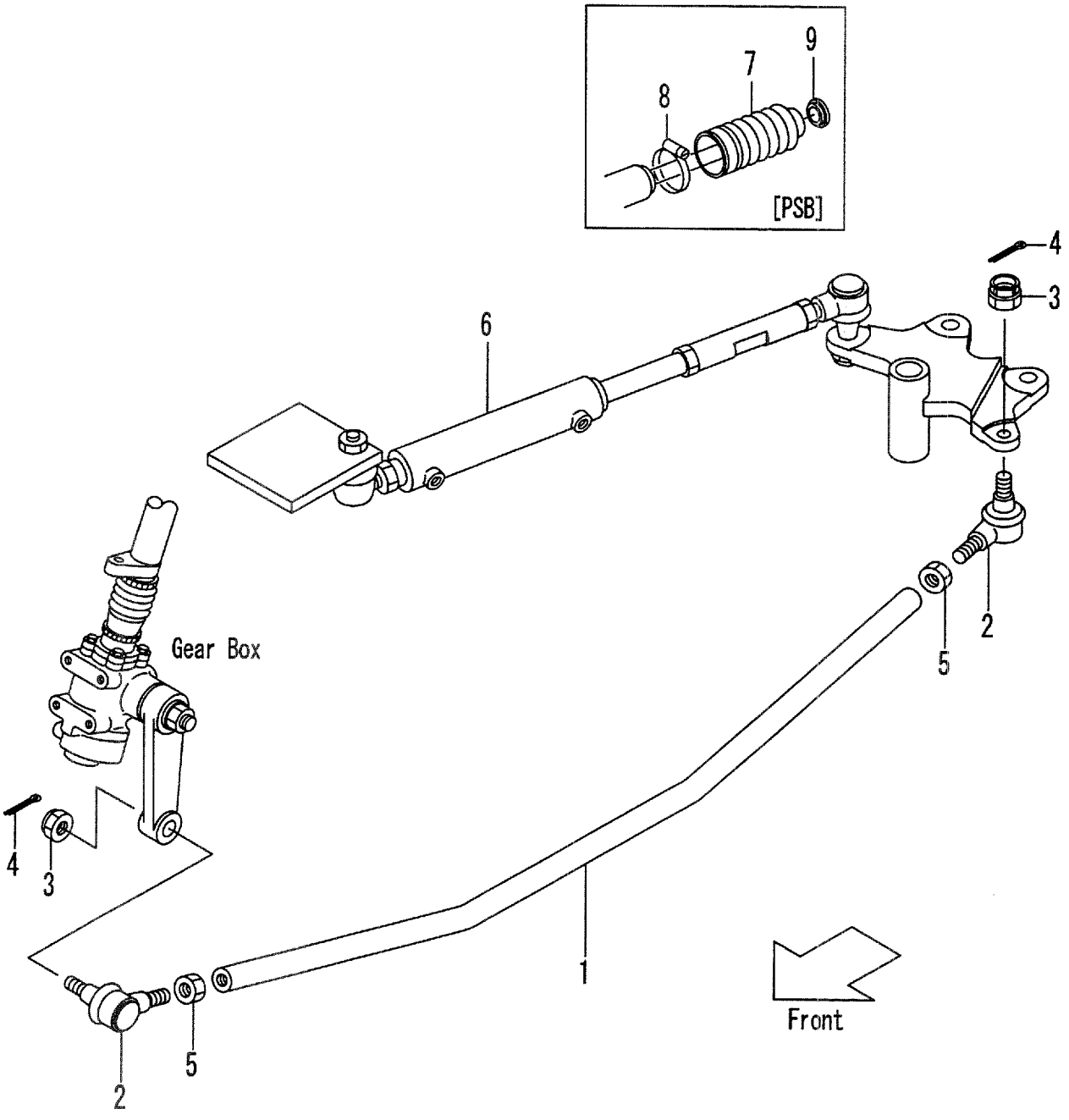

A:FD35C8 D:FD40T8 G:FD50T8 K:FG45T8
B:FD35T8 E:FD45C8 H:FG35T8 L:FG50T8
C:FD40C8 F:FD45T8 J:FG40T8

FIG.69
(F4044210)

Item No	Part No.	Mark	Description		Req'd	Remarks : Serial No.
1	224W4-22001		LINK,DRAG	ﾘﾝｸ	1	A,B,C,D,E,F,H,J,K
-	224W4-22001		LINK,DRAG	ﾘﾝｸ	1	A,B,C,D,E,F,H,J,K [PSS/EXA][PSS/EXC] [PSS/EXD]
-	224W4-22001		LINK,DRAG	ﾘﾝｸ	1	A,B,C,D,E,F,H,J,K [PSS/EXE][PSS/EXH] [PSS/EXN]
-	235H4-22001		LINK,DRAG	ﾘﾝｸ	1	G,L
-	235H4-22001		LINK,DRAG	ﾘﾝｸ	1	G,L [PSS/EXA][PSS/EXC] [PSS/EXD]
-	235H4-22001		LINK,DRAG	ﾘﾝｸ	1	G,L [PSS/EXE][PSS/EXH] [PSS/EXN]
A1	24234-30551		END-ASSY,ROD	ｴﾝﾄﾞｱｯｾﾝ	2	INC.2-4
-	24234-30551		END-ASSY,ROD	ｴﾝﾄﾞｱｯｾﾝ	2	[PSS/EXA][PSS/EXC] [PSS/EXD] INC.2-4
-	24234-30551		END-ASSY,ROD	ｴﾝﾄﾞｱｯｾﾝ	2	[PSS/EXE][PSS/EXH] [PSS/EXN] INC.2-4
2	NO PART NO.	#	END,ROD	ｴﾝﾄﾞ	2	
-	NO PART NO.	#	END,ROD	ｴﾝﾄﾞ	2	[PSS/EXA][PSS/EXC] [PSS/EXD]
-	NO PART NO.	#	END,ROD	ｴﾝﾄﾞ	2	[PSS/EXE][PSS/EXH] [PSS/EXN]
3	01412-10016		NUT	ﾅｯﾄ	2	
-	01412-10016		NUT	ﾅｯﾄ	2	[PSS/EXA][PSS/EXC] [PSS/EXD]
-	01412-10016		NUT	ﾅｯﾄ	2	[PSS/EXE][PSS/EXH] [PSS/EXN]
4	02200-32032		PIN,COTTER	ﾋﾟﾝ	2	
-	02200-32032		PIN,COTTER	ﾋﾟﾝ	2	[PSS/EXA][PSS/EXC] [PSS/EXD]
-	02200-32032		PIN,COTTER	ﾋﾟﾝ	2	[PSS/EXE][PSS/EXH] [PSS/EXN]
5	01402-00022		NUT	ﾅｯﾄ	2	
-	01402-00022		NUT	ﾅｯﾄ	2	[PSS/EXA][PSS/EXC] [PSS/EXD]
-	01402-00022		NUT	ﾅｯﾄ	2	[PSS/EXE][PSS/EXH] [PSS/EXN]
6	NO PART NO.		CYLINDER,POWER	ｼﾘﾝﾀﾞ	1	SEE FIG.83
-	NO PART NO.		CYLINDER,POWER	ｼﾘﾝﾀﾞ	1	[PSS/EXA][PSS/EXC] SEE FIG.83
-	NO PART NO.		CYLINDER,POWER	ｼﾘﾝﾀﾞ	1	[PSS/EXD][PSS/EXE] SEE FIG.83
-	NO PART NO.		CYLINDER,POWER	ｼﾘﾝﾀﾞ	1	[PSS/EXH][PSS/EXN] SEE FIG.83
7	224W4-52061		BOOT	ﾌﾞｰﾂ	1	
-	224W4-52061		BOOT	ﾌﾞｰﾂ	1	[PSS/EXA/PSB][PSS/EXC/PSB] [PSS/EXD/PSB]

FIG.69 DRAG LINK [JPN][PSS/(EXA,EXC,EXD,EXE,EXH,EXN)]

(F4044210) ﾄﾞﾗｯｸﾞﾘﾝｸ

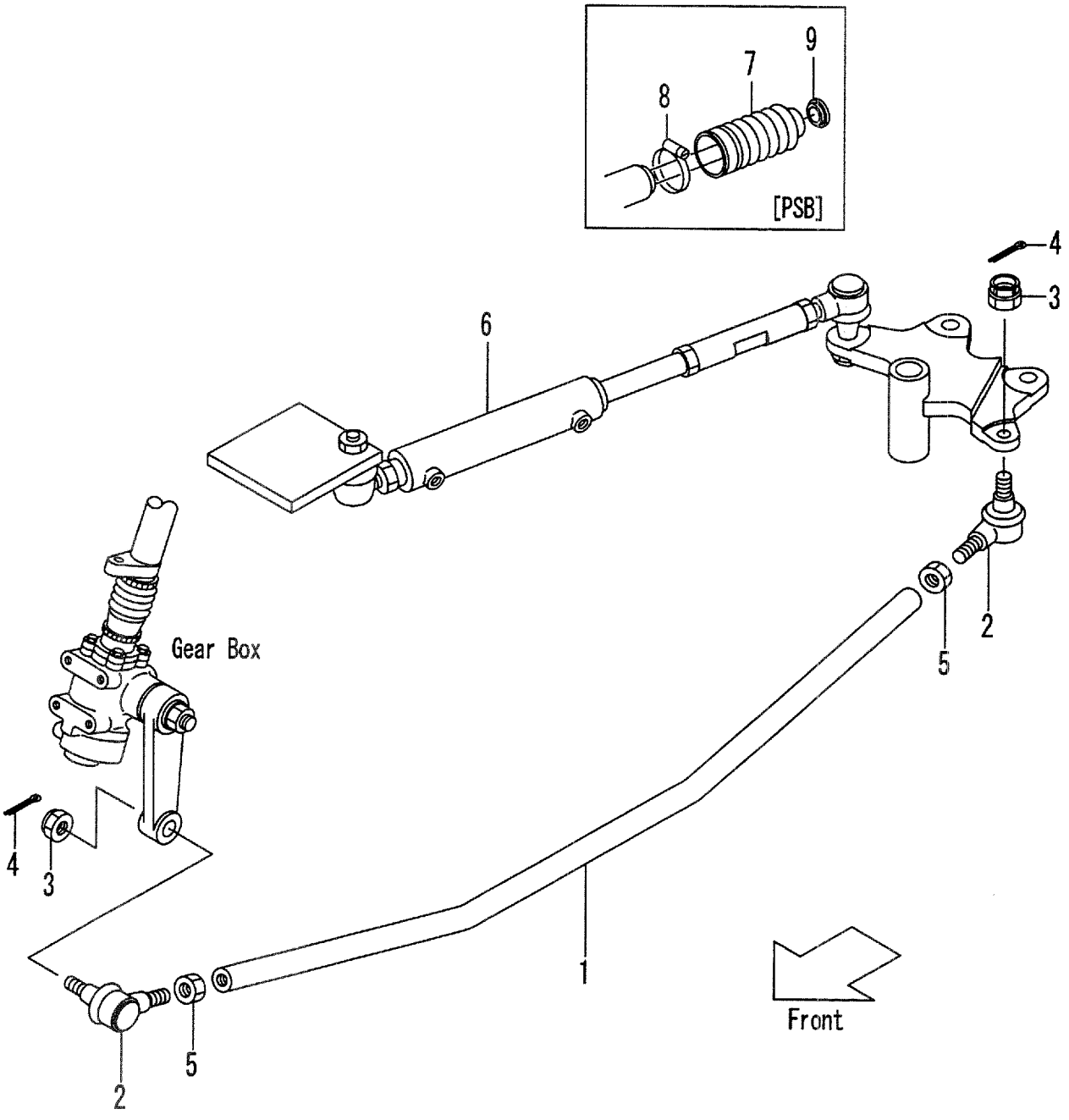

A:FD35C8 D:FD40T8 G:FD50T8 K:FG45T8
B:FD35T8 E:FD45C8 H:FG35T8 L:FG50T8
C:FD40C8 F:FD45T8 J:FG40T8

FIG.69
(F4044210)

Item No	Part No.	Mark	Description		Req'd	Remarks : Serial No.
-	224W4-52061		BOOT	ﾌﾞｰﾂ	1	[PSS/EXE/PSB][PSS/EXH/PSB] [PSS/EXN/PSB]
8	224W4-52071		BAND	ﾊﾞﾝﾄﾞ	1	
-	224W4-52071		BAND	ﾊﾞﾝﾄﾞ	1	[PSS/EXA/PSB][PSS/EXC/PSB] [PSS/EXD/PSB]
-	224W4-52071		BAND	ﾊﾞﾝﾄﾞ	1	[PSS/EXE/PSB][PSS/EXH/PSB] [PSS/EXN/PSB]
9	23654-52021		HANGER	ﾊﾝｶﾞ	1	
-	23654-52021		HANGER	ﾊﾝｶﾞ	1	[PSS/EXA/PSB][PSS/EXC/PSB] [PSS/EXD/PSB]
-	23654-52021		HANGER	ﾊﾝｶﾞ	1	[PSS/EXE/PSB][PSS/EXH/PSB] [PSS/EXN/PSB]

STEERING AXLE

FIG.70 **[JPN][PSS/(EXA,EXC,EXD,EXE,EXH,EXN)]**

(F4044310) ステアリング゛アクスル

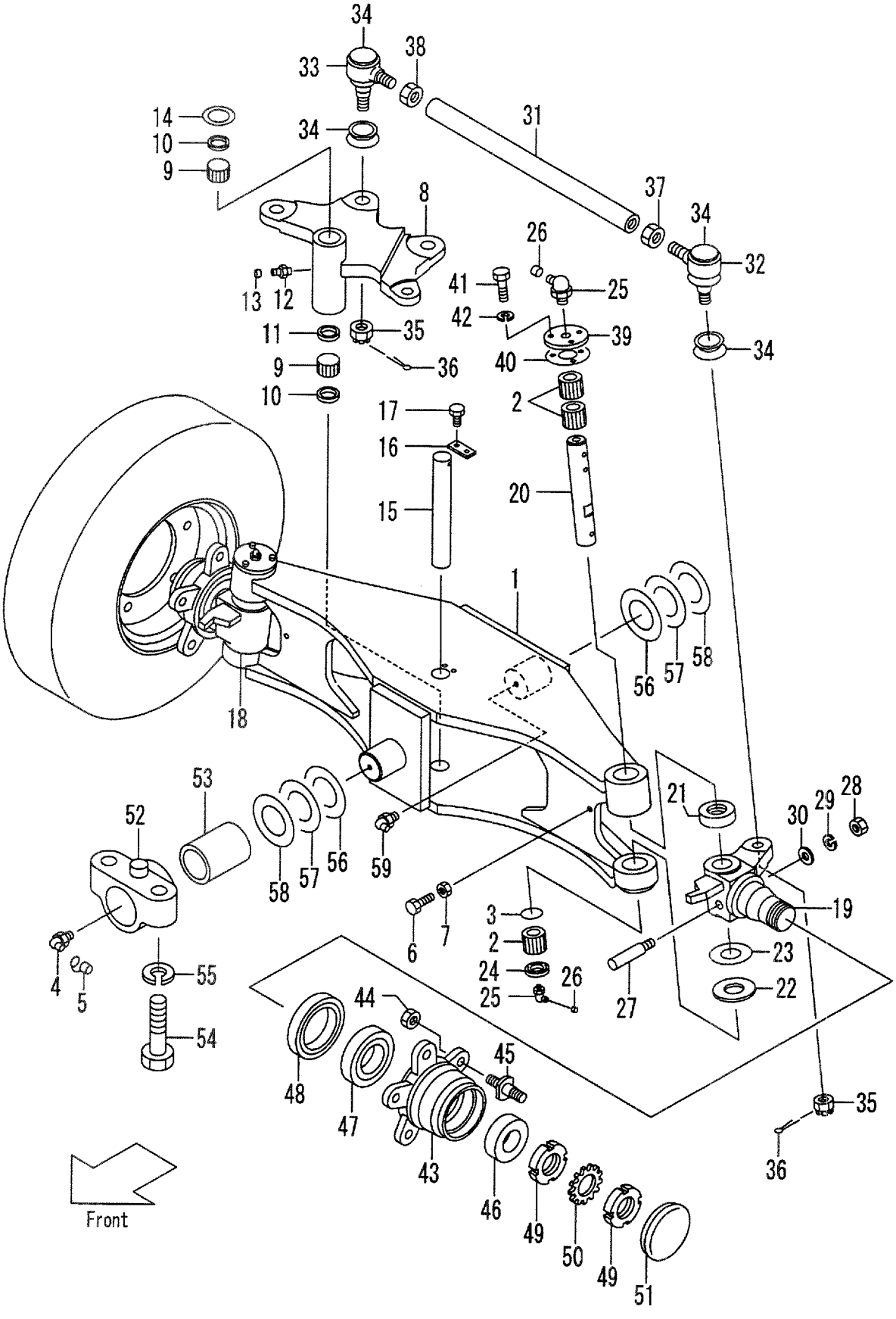

A:FD35C8 D:FD40T8 G:FD50T8 K:FG45T8
B:FD35T8 E:FD45C8 H:FG35T8 L:FG50T8
C:FD40C8 F:FD45T8 J:FG40T8

FIG.70
(F4044310)

Item No	Part No.	Mark	Description		Req'd	Remarks : Serial No.
1	224T4-30201		AXLE	ｱｸｽﾙ	1	A,B,C,D,H,J
-	224T4-30201		AXLE	ｱｸｽﾙ	1	A,B,C,D,H,J [EXA/PSS][EXC/PSS] [EXD/PSS]
-	224T4-30201		AXLE	ｱｸｽﾙ	1	A,B,C,D,H,J [EXE/PSS][EXH/PSS] [EXN/PSS]
-	224W4-30211		AXLE	ｱｸｽﾙ	1	E,F,G,K,L
-	224W4-30211		AXLE	ｱｸｽﾙ	1	E,F,G,K,L [EXA/PSS][EXC/PSS] [EXD/PSS]
-	224W4-30211		AXLE	ｱｸｽﾙ	1	E,F,G,K,L [EXE/PSS][EXH/PSS] [EXN/PSS]
2	22654-32121	*	BEARING	ﾍﾞｱﾘﾝｸﾞ	6	
-	22654-32121	*	BEARING	ﾍﾞｱﾘﾝｸﾞ	6	[EXA/PSS][EXC/PSS] [EXD/PSS]
-	22654-32121	*	BEARING	ﾍﾞｱﾘﾝｸﾞ	6	[EXE/PSS][EXH/PSS] [EXN/PSS]
3	228A4-32081	*	O-RING	Oﾘﾝｸﾞ	2	
-	228A4-32081	*	O-RING	Oﾘﾝｸﾞ	2	[EXA/PSS][EXC/PSS] [EXD/PSS]
-	228A4-32081	*	O-RING	Oﾘﾝｸﾞ	2	[EXE/PSS][EXH/PSS] [EXN/PSS]
4	04901-00160		FITTING	ﾌｨｯﾃｨﾝｸﾞ	1	
-	04901-00160		FITTING	ﾌｨｯﾃｨﾝｸﾞ	1	[EXA/PSS][EXC/PSS] [EXD/PSS]
-	04901-00160		FITTING	ﾌｨｯﾃｨﾝｸﾞ	1	[EXE/PSS][EXH/PSS] [EXN/PSS]
5	22199-12401		CAP	ｷｬｯﾌﾟ	2	
-	22199-12401		CAP	ｷｬｯﾌﾟ	2	[EXA/PSS][EXC/PSS] [EXD/PSS]
-	22199-12401		CAP	ｷｬｯﾌﾟ	2	[EXE/PSS][EXH/PSS] [EXN/PSS]
6	01120-16035		BOLT	ﾎﾞﾙﾄ	2	
-	01120-16035		BOLT	ﾎﾞﾙﾄ	2	[EXA/PSS][EXC/PSS] [EXD/PSS]
-	01120-16035		BOLT	ﾎﾞﾙﾄ	2	[EXE/PSS][EXH/PSS] [EXN/PSS]
7	01402-00016		NUT	ﾅｯﾄ	2	
-	01402-00016		NUT	ﾅｯﾄ	2	[EXA/PSS][EXC/PSS] [EXD/PSS]
-	01402-00016		NUT	ﾅｯﾄ	2	[EXE/PSS][EXH/PSS] [EXN/PSS]
8	224W4-32102		ARM,CENTER	ｱｰﾑ	1	
-	224W4-32102		ARM,CENTER	ｱｰﾑ	1	[EXA/PSS][EXC/PSS] [EXD/PSS]
-	224W4-32102		ARM,CENTER	ｱｰﾑ	1	[EXE/PSS][EXH/PSS] [EXN/PSS]
9	03146-13201	*	BEARING	ﾍﾞｱﾘﾝｸﾞ	2	

STEERING AXLE

FIG.70 **[JPN][PSS/(EXA,EXC,EXD,EXE,EXH,EXN)]**

(F4044310) ステアリング゛アクスル

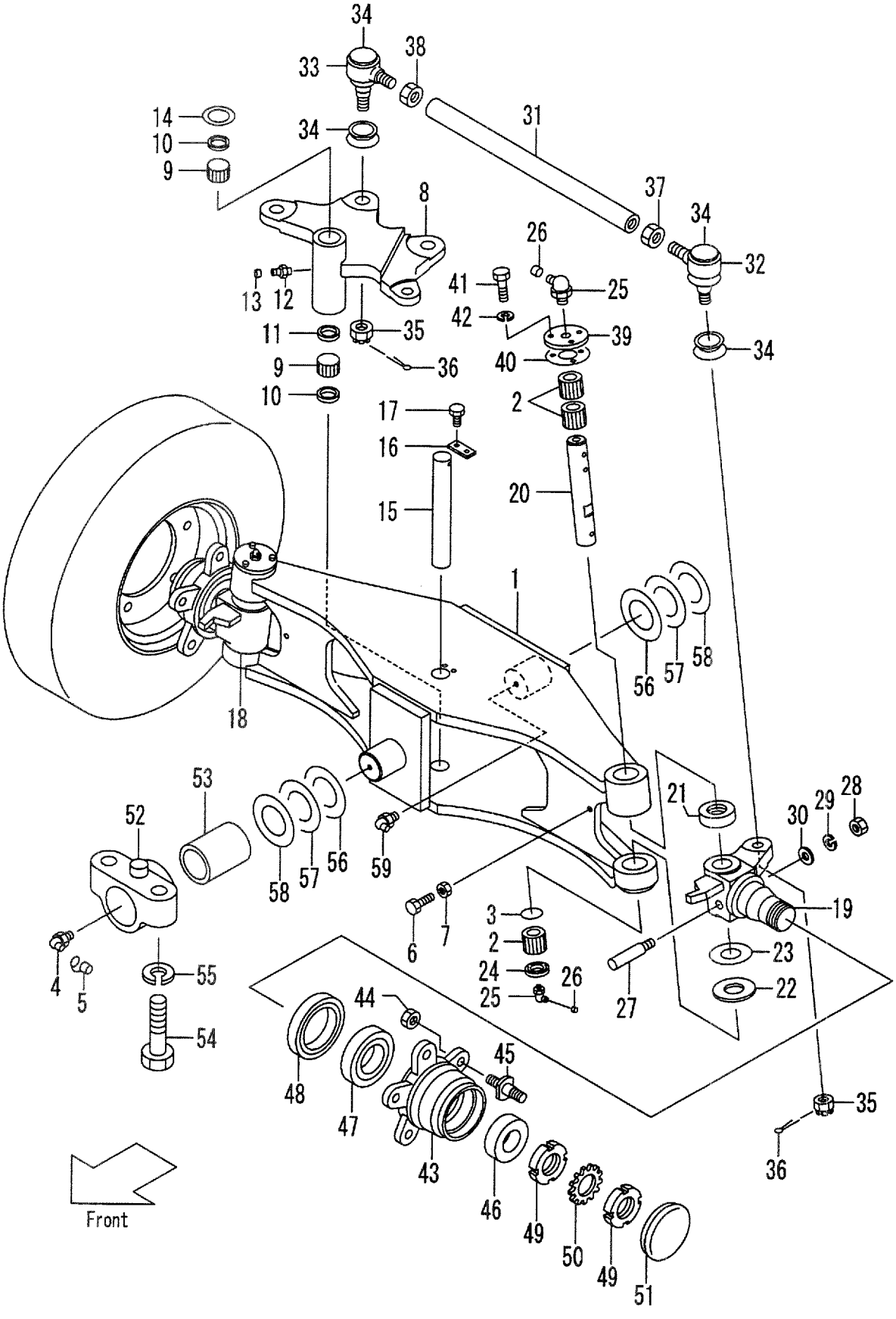

A:FD35C8 D:FD40T8 G:FD50T8 K:FG45T8
B:FD35T8 E:FD45C8 H:FG35T8 L:FG50T8
C:FD40C8 F:FD45T8 J:FG40T8

FIG.70
(F4044310)

Item No	Part No.	Mark	Description		Req'd	Remarks : Serial No.
-	03146-13201	*	BEARING	ﾍﾞｱﾘﾝｸﾞ	2	[EXA/PSS][EXC/PSS] [EXD/PSS]
-	03146-13201	*	BEARING	ﾍﾞｱﾘﾝｸﾞ	2	[EXE/PSS][EXH/PSS] [EXN/PSS]
10	23654-32081	*	SEAL,OIL	ｼｰﾙ	2	
-	23654-32081	*	SEAL,OIL	ｼｰﾙ	2	[EXA/PSS][EXC/PSS] [EXD/PSS]
-	23654-32081	*	SEAL,OIL	ｼｰﾙ	2	[EXE/PSS][EXH/PSS] [EXN/PSS]
11	224W4-32461	*	SPACER	ｽﾍﾟｰｻ	1	
-	224W4-32461	*	SPACER	ｽﾍﾟｰｻ	1	[EXA/PSS][EXC/PSS] [EXD/PSS]
-	224W4-32461	*	SPACER	ｽﾍﾟｰｻ	1	[EXE/PSS][EXH/PSS] [EXN/PSS]
12	04901-00100	*	FITTING	ﾌｨｯﾃｨﾝｸﾞ	1	
-	04901-00100	*	FITTING	ﾌｨｯﾃｨﾝｸﾞ	1	[EXA/PSS][EXC/PSS] [EXD/PSS]
-	04901-00100	*	FITTING	ﾌｨｯﾃｨﾝｸﾞ	1	[EXE/PSS][EXH/PSS] [EXN/PSS]
13	22199-12401	*	CAP	ｷｬｯﾌﾟ	1	
-	22199-12401	*	CAP	ｷｬｯﾌﾟ	1	[EXA/PSS][EXC/PSS] [EXD/PSS]
-	22199-12401	*	CAP	ｷｬｯﾌﾟ	1	[EXE/PSS][EXH/PSS] [EXN/PSS]
14	22214-30321	*	SHIM T-0.2	ｼﾑ	AR	
-	22214-30321	*	SHIM T-0.2	ｼﾑ	AR	[EXA/PSS][EXC/PSS] [EXD/PSS]
-	22214-30321	*	SHIM T-0.2	ｼﾑ	AR	[EXE/PSS][EXH/PSS] [EXN/PSS]
15	224W4-30311		PIN	ﾋﾟﾝ	1	
-	224W4-30311		PIN	ﾋﾟﾝ	1	[EXA/PSS][EXC/PSS] [EXD/PSS]
-	224W4-30311		PIN	ﾋﾟﾝ	1	[EXE/PSS][EXH/PSS] [EXN/PSS]
16	20224-30061	*	PLATE	ﾌﾟﾚｰﾄ	1	
-	20224-30061	*	PLATE	ﾌﾟﾚｰﾄ	1	[EXA/PSS][EXC/PSS] [EXD/PSS]
-	20224-30061	*	PLATE	ﾌﾟﾚｰﾄ	1	[EXE/PSS][EXH/PSS] [EXN/PSS]
17	01183-08016	*	BOLT	ﾎﾞﾙﾄ	2	
-	01183-08016	*	BOLT	ﾎﾞﾙﾄ	2	[EXA/PSS][EXC/PSS] [EXD/PSS]
-	01183-08016	*	BOLT	ﾎﾞﾙﾄ	2	[EXE/PSS][EXH/PSS] [EXN/PSS]
18	224W4-30201		KNUCKLE,RH	ﾅｯｸﾙ	1	A,B,C,D,H,J
-	224W4-30201		KNUCKLE,RH	ﾅｯｸﾙ	1	A,B,C,D,H,J [EXA/PSS][EXC/PSS] [EXD/PSS]

STEERING AXLE

FIG.70 **[JPN][PSS/(EXA,EXC,EXD,EXE,EXH,EXN)]**

(F4044310) ステアリング゛アクスル

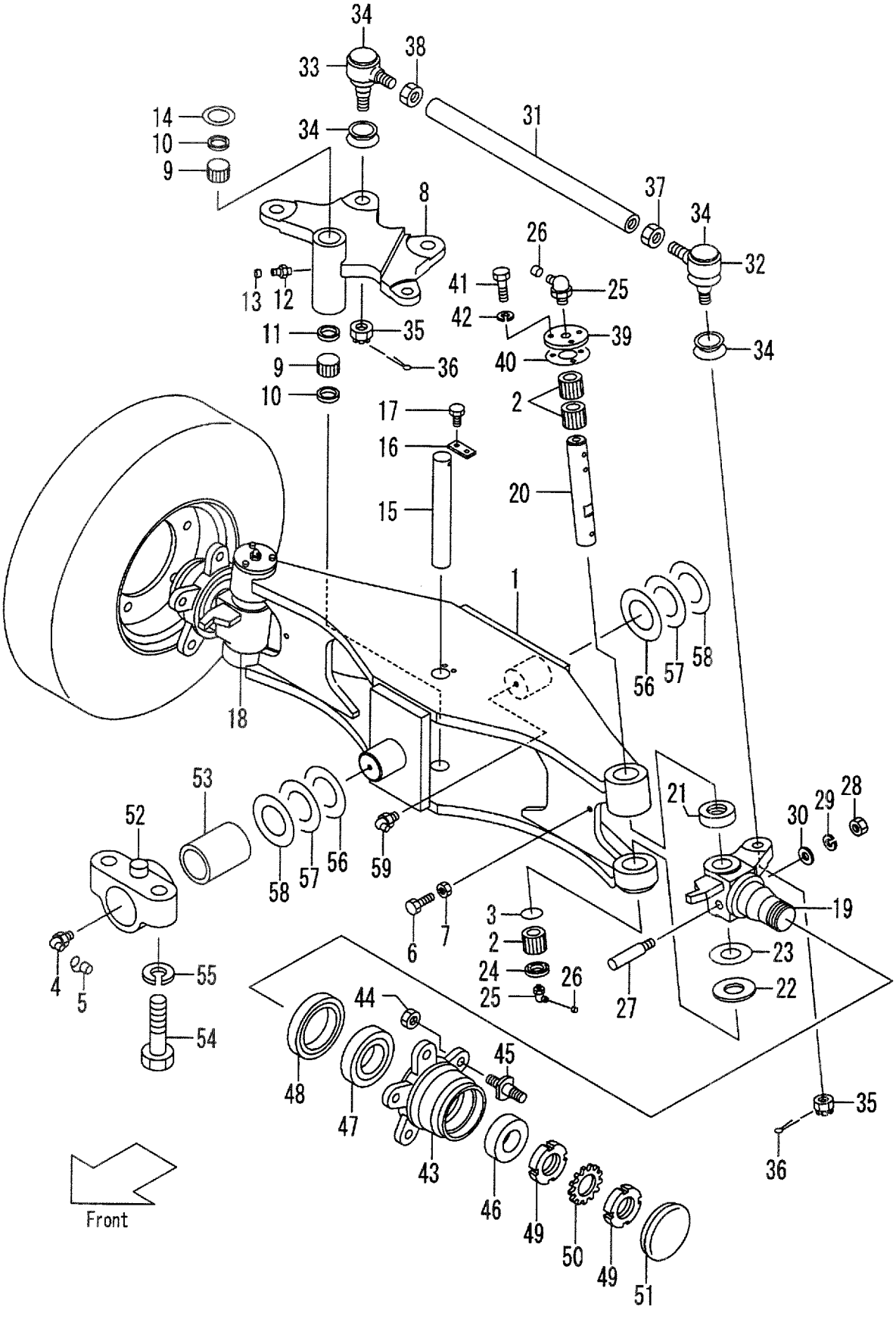

FIG.70
(F4044310)

Item No	Part No.	Mark	Description		Req'd	Remarks : Serial No.
-	224W4-30201		KNUCKLE,RH	ﾅｯｸﾙ	1	A,B,C,D,H,J [EXE/PSS][EXH/PSS] [EXN/PSS]
-	224W4-30401		KNUCKLE,RH	ﾅｯｸﾙ	1	E,F,G,K,L
-	224W4-30401		KNUCKLE,RH	ﾅｯｸﾙ	1	E,F,G,K,L [EXA/PSS][EXC/PSS] [EXD/PSS]
-	224W4-30401		KNUCKLE,RH	ﾅｯｸﾙ	1	E,F,G,K,L [EXE/PSS][EXH/PSS] [EXN/PSS]
19	224W4-30251		KNUCKLE,LH	ﾅｯｸﾙ	1	A,B,C,D,H,J
-	224W4-30251		KNUCKLE,LH	ﾅｯｸﾙ	1	A,B,C,D,H,J [EXA/PSS][EXC/PSS] [EXD/PSS]
-	224W4-30251		KNUCKLE,LH	ﾅｯｸﾙ	1	A,B,C,D,H,J [EXE/PSS][EXH/PSS] [EXN/PSS]
-	224W4-30451		KNUCKLE,LH	ﾅｯｸﾙ	1	E,F,G,K,L
-	224W4-30451		KNUCKLE,LH	ﾅｯｸﾙ	1	E,F,G,K,L [EXA/PSS][EXC/PSS] [EXD/PSS]
-	224W4-30451		KNUCKLE,LH	ﾅｯｸﾙ	1	E,F,G,K,L [EXE/PSS][EXH/PSS] [EXN/PSS]
20	228A4-32151		KINGPIN	ｷﾝｸﾞﾋﾟﾝ	2	
-	228A4-32151		KINGPIN	ｷﾝｸﾞﾋﾟﾝ	2	[EXA/PSS][EXC/PSS] [EXD/PSS]
-	228A4-32151		KINGPIN	ｷﾝｸﾞﾋﾟﾝ	2	[EXE/PSS][EXH/PSS] [EXN/PSS]
21	22654-32201	*	BEARING	ﾍﾞｱﾘﾝｸﾞ	2	
-	22654-32201	*	BEARING	ﾍﾞｱﾘﾝｸﾞ	2	[EXA/PSS][EXC/PSS] [EXD/PSS]
-	22654-32201	*	BEARING	ﾍﾞｱﾘﾝｸﾞ	2	[EXE/PSS][EXH/PSS] [EXN/PSS]
22	228A4-32071	*	SPACER	ｽﾍﾟｰｻ	2	
-	228A4-32071	*	SPACER	ｽﾍﾟｰｻ	2	[EXA/PSS][EXC/PSS] [EXD/PSS]
-	228A4-32071	*	SPACER	ｽﾍﾟｰｻ	2	[EXE/PSS][EXH/PSS] [EXN/PSS]
23	22614-30280	*	SHIM,T-0.2	ｼﾑ	4	
-	22614-30280	*	SHIM,T-0.2	ｼﾑ	4	[EXA/PSS][EXC/PSS] [EXD/PSS]
-	22614-30280	*	SHIM,T-0.2	ｼﾑ	4	[EXE/PSS][EXH/PSS] [EXN/PSS]
24	25814-32051	*	SEAL,OIL	ｼｰﾙ	2	
-	25814-32051	*	SEAL,OIL	ｼｰﾙ	2	[EXA/PSS][EXC/PSS] [EXD/PSS]
-	25814-32051	*	SEAL,OIL	ｼｰﾙ	2	[EXE/PSS][EXH/PSS] [EXN/PSS]
25	04901-00160	*	FITTING	ﾌｨｯﾃｨﾝｸﾞ	4	

STEERING AXLE

FIG.70 **[JPN][PSS/(EXA,EXC,EXD,EXE,EXH,EXN)]**

(F4044310) ステアリング゛アクスル

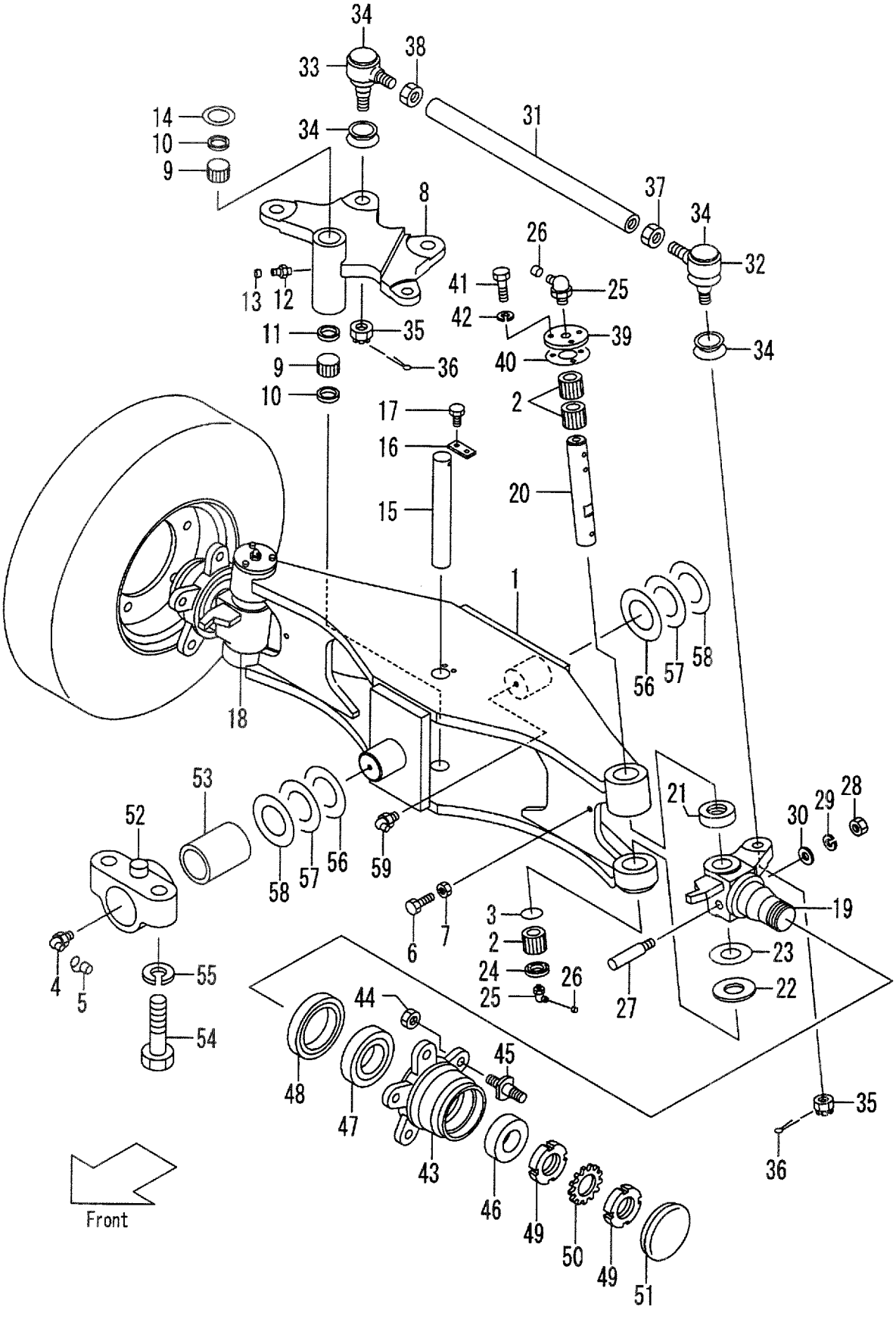

A:FD35C8 D:FD40T8 G:FD50T8 K:FG45T8
B:FD35T8 E:FD45C8 H:FG35T8 L:FG50T8
C:FD40C8 F:FD45T8 J:FG40T8

FIG.70
(F4044310)

Item No	Part No.	Mark	Description		Req'd	Remarks : Serial No.
-	04901-00160	*	FITTING	ﾌｨｯﾃｨﾝｸﾞ	4	[EXA/PSS][EXC/PSS] [EXD/PSS]
-	04901-00160	*	FITTING	ﾌｨｯﾃｨﾝｸﾞ	4	[EXE/PSS][EXH/PSS] [EXN/PSS]
26	22199-12401	*	CAP	ｷｬｯﾌﾟ	4	
-	22199-12401	*	CAP	ｷｬｯﾌﾟ	4	[EXA/PSS][EXC/PSS] [EXD/PSS]
-	22199-12401	*	CAP	ｷｬｯﾌﾟ	4	[EXE/PSS][EXH/PSS] [EXN/PSS]
27	20314-30161	*	PIN,LOCK	ﾋﾟﾝ	2	
-	20314-30161	*	PIN,LOCK	ﾋﾟﾝ	2	[EXA/PSS][EXC/PSS] [EXD/PSS]
-	20314-30161	*	PIN,LOCK	ﾋﾟﾝ	2	[EXE/PSS][EXH/PSS] [EXN/PSS]
28	01400-00010	*	NUT	ﾅｯﾄ	2	
-	01400-00010	*	NUT	ﾅｯﾄ	2	[EXA/PSS][EXC/PSS] [EXD/PSS]
-	01400-00010	*	NUT	ﾅｯﾄ	2	[EXE/PSS][EXH/PSS] [EXN/PSS]
29	02010-00010	*	WASHER	ﾜｯｼｬ	2	
-	02010-00010	*	WASHER	ﾜｯｼｬ	2	[EXA/PSS][EXC/PSS] [EXD/PSS]
-	02010-00010	*	WASHER	ﾜｯｼｬ	2	[EXE/PSS][EXH/PSS] [EXN/PSS]
30	02000-00010	*	WASHER	ﾜｯｼｬ	2	
-	02000-00010	*	WASHER	ﾜｯｼｬ	2	[EXA/PSS][EXC/PSS] [EXD/PSS]
-	02000-00010	*	WASHER	ﾜｯｼｬ	2	[EXE/PSS][EXH/PSS] [EXN/PSS]
31	224W4-32501		ROD,TIE	ﾛｯﾄﾞ	2	
-	224W4-32501		ROD,TIE	ﾛｯﾄﾞ	2	[EXA/PSS][EXC/PSS] [EXD/PSS]
-	224W4-32501		ROD,TIE	ﾛｯﾄﾞ	2	[EXE/PSS][EXH/PSS] [EXN/PSS]
A1	224W4-32301		JOINT-ASSY,BALL,RH	ｼﾞｮｲﾝﾄｱｯｾﾝ	2	INC.33,35
-	224W4-32301		JOINT-ASSY,BALL,RH	ｼﾞｮｲﾝﾄｱｯｾﾝ	2	[EXA/PSS][EXC/PSS] [EXD/PSS] INC.32,34
-	224W4-32301		JOINT-ASSY,BALL,RH	ｼﾞｮｲﾝﾄｱｯｾﾝ	2	[EXE/PSS][EXH/PSS] [EXN/PSS] INC.32,34
A2	224W4-32341		JOINT-ASSY,BALL,LH	ｼﾞｮｲﾝﾄｱｯｾﾝ	2	INC.33,34
-	224W4-32341		JOINT-ASSY,BALL,LH	ｼﾞｮｲﾝﾄｱｯｾﾝ	2	[EXA/PSS][EXC/PSS] [EXD/PSS] INC.33,34
-	224W4-32341		JOINT-ASSY,BALL,LH	ｼﾞｮｲﾝﾄｱｯｾﾝ	2	[EXE/PSS][EXH/PSS] [EXN/PSS] INC.33,34
32	NO PART NO.	#	END,ROD,RH	ｴﾝﾄﾞ	2	
-	NO PART NO.	#	END,ROD,RH	ｴﾝﾄﾞ	2	[EXA/PSS][EXC/PSS] [EXD/PSS]
-	NO PART NO.	#	END,ROD,RH	ｴﾝﾄﾞ	2	[EXE/PSS][EXH/PSS] [EXN/PSS]
33	NO PART NO.	#	END,ROD,LH	ｴﾝﾄﾞ	2	

STEERING AXLE

FIG.70 **[JPN][PSS/(EXA,EXC,EXD,EXE,EXH,EXN)]**

(F4044310) ステアリング゛アクスル

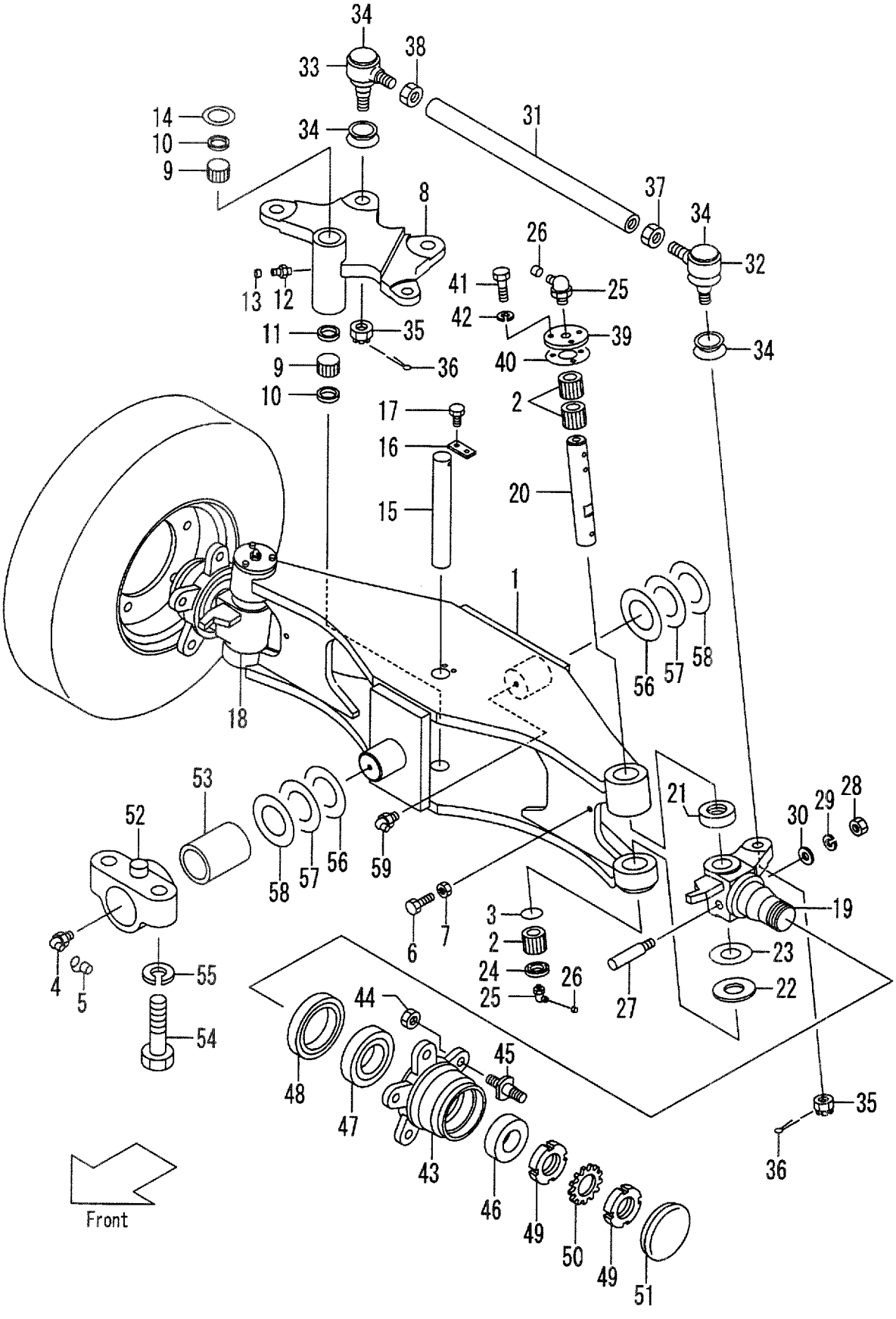

FIG.70
(F4044310)

Item No	Part No.	Mark	Description		Req'd	Remarks : Serial No.
-	NO PART NO.	#	END,ROD,LH	ｴﾝﾄﾞ	2	[EXA/PSS][EXC/PSS] [EXD/PSS]
-	NO PART NO.	#	END,ROD,LH	ｴﾝﾄﾞ	2	[EXE/PSS][EXH/PSS] [EXN/PSS]
34	NO PART NO.	#	COVER	ｶﾊﾞｰ	4	
-	NO PART NO.	#	COVER	ｶﾊﾞｰ	4	[EXA/PSS][EXC/PSS] [EXD/PSS]
-	NO PART NO.	#	COVER	ｶﾊﾞｰ	4	[EXE/PSS][EXH/PSS] [EXN/PSS]
35	01412-10020		NUT	ﾅｯﾄ	4	
-	01412-10020		NUT	ﾅｯﾄ	4	[EXA/PSS][EXC/PSS] [EXD/PSS]
-	01412-10020		NUT	ﾅｯﾄ	4	[EXE/PSS][EXH/PSS] [EXN/PSS]
36	02200-04040		PIN,COTTER	ﾋﾟﾝ	4	
-	02200-04040		PIN,COTTER	ﾋﾟﾝ	4	[EXA/PSS][EXC/PSS] [EXD/PSS]
-	02200-04040		PIN,COTTER	ﾋﾟﾝ	4	[EXE/PSS][EXH/PSS] [EXN/PSS]
37	01402-00024		NUT	ﾅｯﾄ	2	
-	01402-00024		NUT	ﾅｯﾄ	2	[EXA/PSS][EXC/PSS] [EXD/PSS]
-	01402-00024		NUT	ﾅｯﾄ	2	[EXE/PSS][EXH/PSS] [EXN/PSS]
38	01407-00024		NUT	ﾅｯﾄ	2	
-	01407-00024		NUT	ﾅｯﾄ	2	[EXA/PSS][EXC/PSS] [EXD/PSS]
-	01407-00024		NUT	ﾅｯﾄ	2	[EXE/PSS][EXH/PSS] [EXN/PSS]
39	25784-32411	*	PLATE	ﾌﾟﾚｰﾄ	2	
-	25784-32411	*	PLATE	ﾌﾟﾚｰﾄ	2	[EXA/PSS][EXC/PSS] [EXD/PSS]
-	25784-32411	*	PLATE	ﾌﾟﾚｰﾄ	2	[EXE/PSS][EXH/PSS] [EXN/PSS]
40	25784-32421	*	PACKING	ﾊﾟｯｷﾝｸﾞ	2	
-	25784-32421	*	PACKING	ﾊﾟｯｷﾝｸﾞ	2	[EXA/PSS][EXC/PSS] [EXD/PSS]
-	25784-32421	*	PACKING	ﾊﾟｯｷﾝｸﾞ	2	[EXE/PSS][EXH/PSS] [EXN/PSS]
41	01100-08020	*	BOLT	ﾎﾞﾙﾄ	6	
-	01100-08020	*	BOLT	ﾎﾞﾙﾄ	6	[EXA/PSS][EXC/PSS] [EXD/PSS]
-	01100-08020	*	BOLT	ﾎﾞﾙﾄ	6	[EXE/PSS][EXH/PSS] [EXN/PSS]
42	02010-00008	*	WASHER	ﾜｯｼｬ	6	
-	02010-00008	*	WASHER	ﾜｯｼｬ	6	[EXA/PSS][EXC/PSS] [EXD/PSS]
-	02010-00008	*	WASHER	ﾜｯｼｬ	6	[EXE/PSS][EXH/PSS] [EXN/PSS]
43	23814-30064		HUB	ﾊﾌﾞ	2	

STEERING AXLE

FIG.70 **[JPN][PSS/(EXA,EXC,EXD,EXE,EXH,EXN)]**

(F4044310) ステアリング゛アクスル

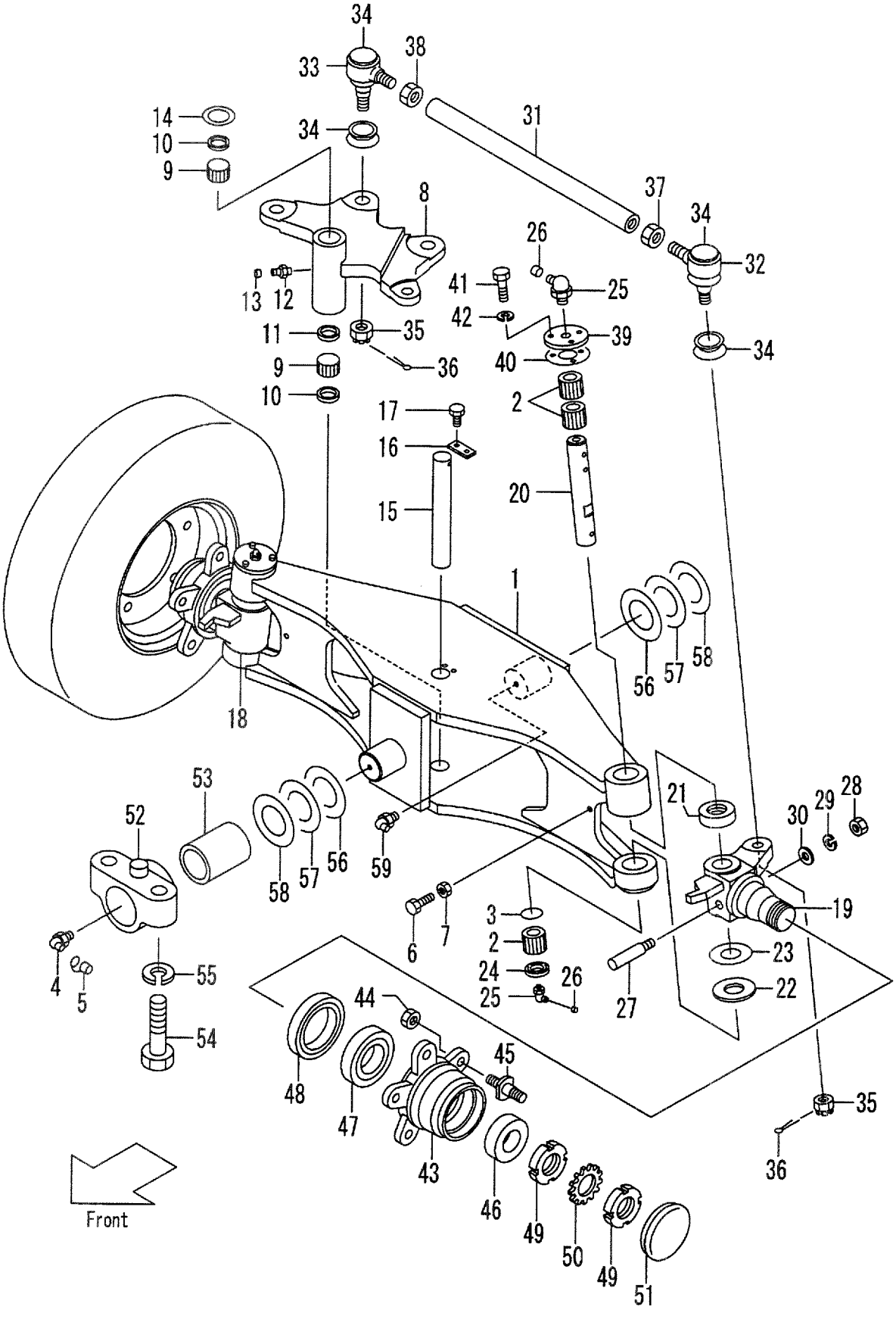

A:FD35C8 D:FD40T8 G:FD50T8 K:FG45T8
B:FD35T8 E:FD45C8 H:FG35T8 L:FG50T8
C:FD40C8 F:FD45T8 J:FG40T8

FIG.70
(F4044310)

Item No	Part No.	Mark	Description		Req'd	Remarks : Serial No.
-	23814-30064		HUB	ﾊﾌﾞ	2	[EXA/PSS][EXC/PSS] [EXD/PSS]
-	23814-30064		HUB	ﾊﾌﾞ	2	[EXE/PSS][EXH/PSS] [EXN/PSS]
44	01400-10020		NUT	ﾅｯﾄ	10	
-	01400-10020		NUT	ﾅｯﾄ	10	[EXA/PSS][EXC/PSS] [EXD/PSS]
-	01400-10020		NUT	ﾅｯﾄ	10	[EXE/PSS][EXH/PSS] [EXN/PSS]
45	24354-42301		BOLT	ﾎﾞﾙﾄ	10	
-	24354-42301		BOLT	ﾎﾞﾙﾄ	10	[EXA/PSS][EXC/PSS] [EXD/PSS]
-	24354-42301		BOLT	ﾎﾞﾙﾄ	10	[EXE/PSS][EXH/PSS] [EXN/PSS]
46	03071-30211		BEARING	ﾍﾞｱﾘﾝｸﾞ	2	
-	03071-30211		BEARING	ﾍﾞｱﾘﾝｸﾞ	2	[EXA/PSS][EXC/PSS] [EXD/PSS]
-	03071-30211		BEARING	ﾍﾞｱﾘﾝｸﾞ	2	[EXE/PSS][EXH/PSS] [EXN/PSS]
47	03071-30214		BEARING	ﾍﾞｱﾘﾝｸﾞ	2	
-	03071-30214		BEARING	ﾍﾞｱﾘﾝｸﾞ	2	[EXA/PSS][EXC/PSS] [EXD/PSS]
-	03071-30214		BEARING	ﾍﾞｱﾘﾝｸﾞ	2	[EXE/PSS][EXH/PSS] [EXN/PSS]
48	03211-09501		SEAL,OIL	ｼｰﾙ	2	
-	03211-09501		SEAL,OIL	ｼｰﾙ	2	[EXA/PSS][EXC/PSS] [EXD/PSS]
-	03211-09501		SEAL,OIL	ｼｰﾙ	2	[EXE/PSS][EXH/PSS] [EXN/PSS]
49	03192-00011		NUT	ﾅｯﾄ	4	
-	03192-00011		NUT	ﾅｯﾄ	4	[EXA/PSS][EXC/PSS] [EXD/PSS]
-	03192-00011		NUT	ﾅｯﾄ	4	[EXE/PSS][EXH/PSS] [EXN/PSS]
50	03192-10011		WASHER	ﾜｯｼｬ	2	
-	03192-10011		WASHER	ﾜｯｼｬ	2	[EXA/PSS][EXC/PSS] [EXD/PSS]
-	03192-10011		WASHER	ﾜｯｼｬ	2	[EXE/PSS][EXH/PSS] [EXN/PSS]
51	22654-32281		CAP	ｷｬｯﾌﾟ	2	
-	22654-32281		CAP	ｷｬｯﾌﾟ	2	[EXA/PSS][EXC/PSS] [EXD/PSS]
-	22654-32281		CAP	ｷｬｯﾌﾟ	2	[EXE/PSS][EXH/PSS] [EXN/PSS]
52	224W6-12601		SUPPORT	ｻﾎﾟｰﾄ	2	
-	224W6-12601		SUPPORT	ｻﾎﾟｰﾄ	2	[EXA/PSS][EXC/PSS] [EXD/PSS]
-	224W6-12601		SUPPORT	ｻﾎﾟｰﾄ	2	[EXE/PSS][EXH/PSS] [EXN/PSS]
53	224W6-12611		BUSHING	ﾌﾞｯｼﾝｸﾞ	2	

STEERING AXLE

FIG.70 **[JPN][PSS/(EXA,EXC,EXD,EXE,EXH,EXN)]**

(F4044310) ステアリング゛アクスル

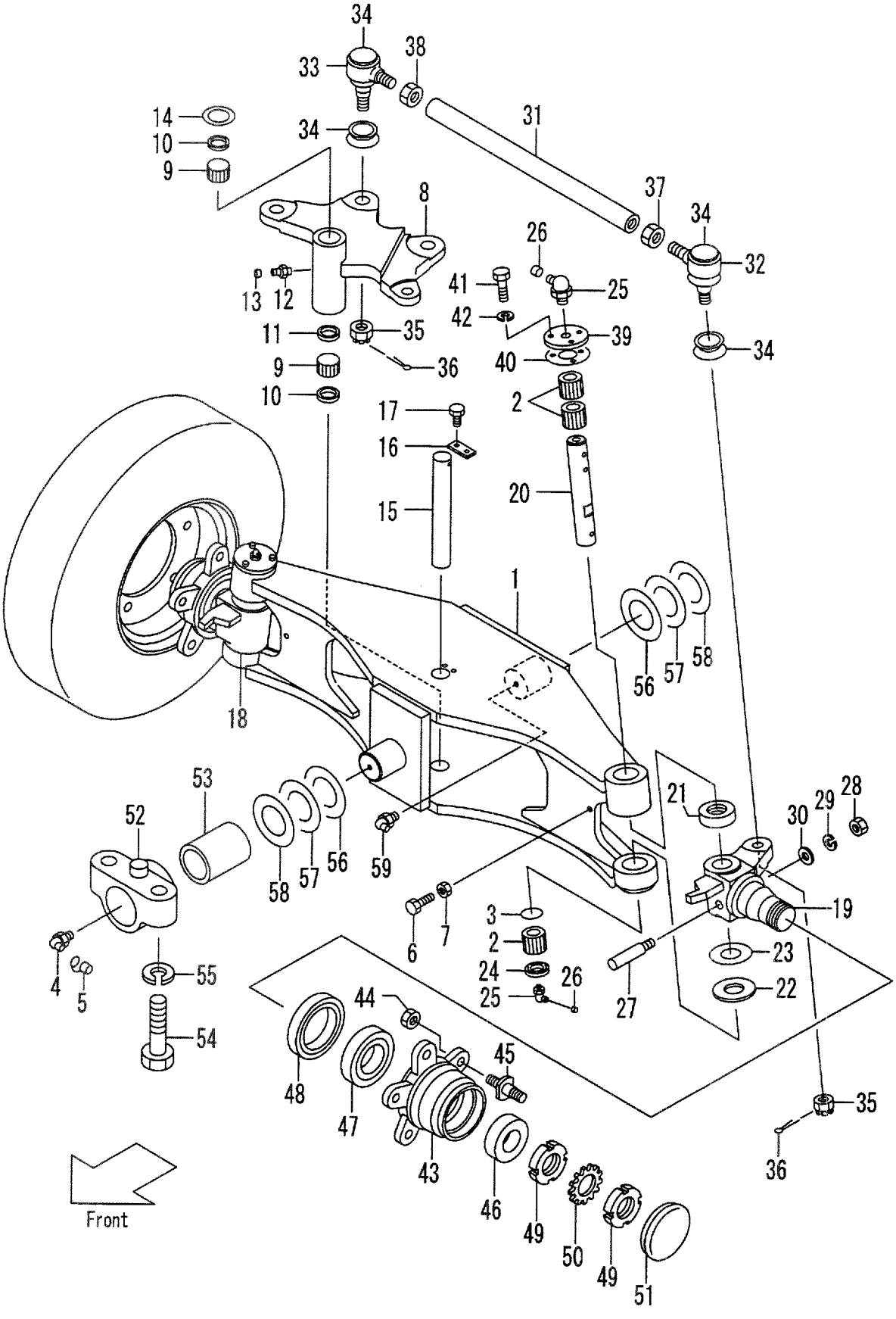

FIG.70
(F4044310)

Item No	Part No.	Mark	Description		Req'd	Remarks : Serial No.
-	224W6-12611		BUSHING	ﾌﾞｯｼﾝｸﾞ	2	[EXA/PSS][EXC/PSS] [EXD/PSS]
-	224W6-12611		BUSHING	ﾌﾞｯｼﾝｸﾞ	2	[EXE/PSS][EXH/PSS] [EXN/PSS]
54	01100-20100		BOLT	ﾎﾞﾙﾄ	4	
-	01100-20100		BOLT	ﾎﾞﾙﾄ	4	[EXA/PSS][EXC/PSS] [EXD/PSS]
-	01100-20100		BOLT	ﾎﾞﾙﾄ	4	[EXE/PSS][EXH/PSS] [EXN/PSS]
55	02010-00020		WASHER	ﾜｯｼｬ	4	
-	02010-00020		WASHER	ﾜｯｼｬ	4	[EXA/PSS][EXC/PSS] [EXD/PSS]
-	02010-00020		WASHER	ﾜｯｼｬ	4	[EXE/PSS][EXH/PSS] [EXN/PSS]
56	25176-12371		SHIM,T-2.3	ｼﾑ	4	
-	25176-12371		SHIM,T-2.3	ｼﾑ	4	[EXA/PSS][EXC/PSS] [EXD/PSS]
-	25176-12371		SHIM,T-2.3	ｼﾑ	4	[EXE/PSS][EXH/PSS] [EXN/PSS]
57	25176-12451		SHIM,T-1.0	ｼﾑ	AR	
-	25176-12451		SHIM,T-1.0	ｼﾑ	AR	[EXA/PSS][EXC/PSS] [EXD/PSS]
-	25176-12451		SHIM,T-1.0	ｼﾑ	AR	[EXE/PSS][EXH/PSS] [EXN/PSS]
58	25844-32401		SHIM,T-0.5	ｼﾑ	AR	
-	25844-32401		SHIM,T-0.5	ｼﾑ	AR	[EXA/PSS][EXC/PSS] [EXD/PSS]
-	25844-32401		SHIM,T-0.5	ｼﾑ	AR	[EXE/PSS][EXH/PSS] [EXN/PSS]
59	04901-00190		FITTING	ﾌｨｯﾃｨﾝｸﾞ	1	
-	04901-00190		FITTING	ﾌｨｯﾃｨﾝｸﾞ	1	[EXA/PSS][EXC/PSS] [EXD/PSS]
-	04901-00190		FITTING	ﾌｨｯﾃｨﾝｸﾞ	1	[EXE/PSS][EXH/PSS] [EXN/PSS]
K1	224W4-39801		KIT,REPAIR,KING-PIN	ﾘﾍﾟｱｷｯﾄ	1	INC.2,3,21-30,39-42
-	224W4-39801		KIT,REPAIR,KING-PIN	ﾘﾍﾟｱｷｯﾄ	1	[EXA/PSS][EXC/PSS] INC.2,3,21-30,39-42
-	224W4-39801		KIT,REPAIR,KING-PIN	ﾘﾍﾟｱｷｯﾄ	1	[EXD/PSS][EXE/PSS] INC.2,3,21-30,39-42
-	224W4-39801		KIT,REPAIR,KING-PIN	ﾘﾍﾟｱｷｯﾄ	1	[EXH/PSS][EXN/PSS] INC.2,3,21-30,39-42
K2	224W4-39811		KIT,REPAIR,CENTER-PIN	ﾘﾍﾟｱｷｯﾄ	1	INC.9-14,16,17
-	224W4-39811		KIT,REPAIR,CENTER-PIN	ﾘﾍﾟｱｷｯﾄ	1	[EXA/PSS][EXC/PSS] INC.9-14,16,17
-	224W4-39811		KIT,REPAIR,CENTER-PIN	ﾘﾍﾟｱｷｯﾄ	1	[EXD/PSS][EXE/PSS] INC.9-14,16,17
-	224W4-39811		KIT,REPAIR,CENTER-PIN	ﾘﾍﾟｱｷｯﾄ	1	[EXH/PSS][EXN/PSS] INC.9-14,16,17

FIG.71 STEERING AXLE [OBT]

(F4044320) ステアリング゛アクスル

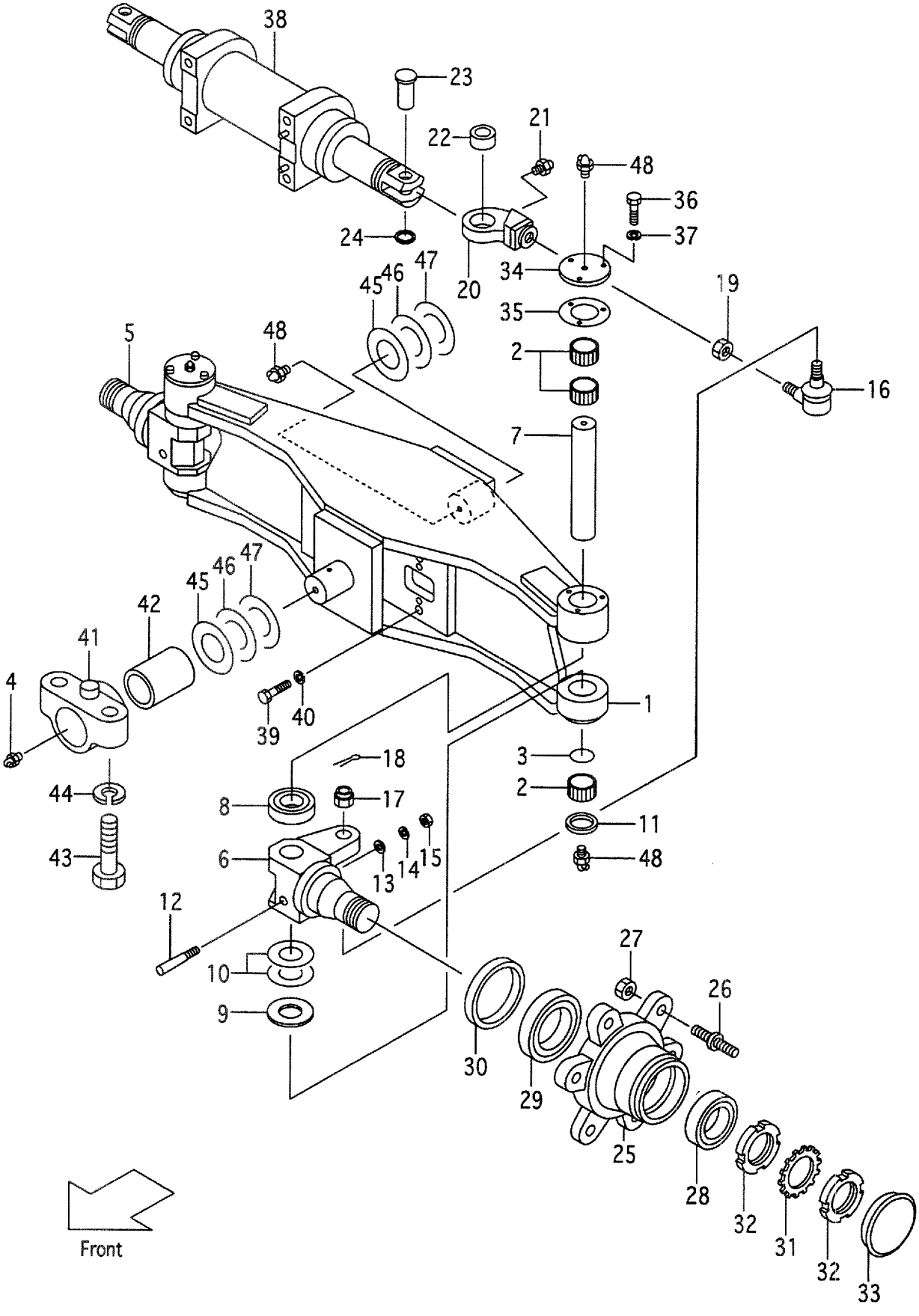

A:FD35C8 D:FD40T8 G:FD50T8 K:FG45T8
B:FD35T8 E:FD45C8 H:FG35T8 L:FG50T8
C:FD40C8 F:FD45T8 J:FG40T8

FIG.71
(F4044320)

Item No	Part No.	Mark	Description		Req'd	Remarks : Serial No.
1	524W2-42101		AXLE	ｱｸｽﾙ	1	[OBT]
2	22654-32121		BEARING	ﾍﾞｱﾘﾝｸﾞ	6	[OBT]
3	228A4-32081		O-RING	Oﾘﾝｸﾞ	2	[OBT]
4	04901-00160		FITTING	ﾌｨｯﾃｨﾝｸﾞ	1	[OBT]
5	524W2-40121		KNUCKLE,RH	ﾅｯｸﾙ	1	[OBT]
6	524W2-40131		KNUCKLE,LH	ﾅｯｸﾙ	1	[OBT]
7	228A4-32151		PIN,KING	ﾋﾟﾝ	2	[OBT]
8	22654-32201		BEARING	ﾍﾞｱﾘﾝｸﾞ	2	[OBT]
9	228A4-32071		SPACER	ｽﾍﾟｰｻ	2	[OBT]
10	22614-30280		SHIM,T-0.2	ｼﾑ	4	[OBT]
11	25814-32051		SEAL,OIL	ｼｰﾙ	2	[OBT]
12	20314-30161		PIN	ﾋﾟﾝ	2	[OBT]
13	02000-00010		WASHER	ﾜｯｼｬ	2	[OBT]
14	02010-00010		WASHER	ﾜｯｼｬ	2	[OBT]
15	01400-00010		NUT	ﾅｯﾄ	2	[OBT]
16	25904-50232		JOINT,BALL	ｼﾞｮｲﾝﾄ	2	[OBT]
17	01412-10030		NUT	ﾅｯﾄ	2	[OBT]
18	02200-06055		PIN,COTTER	ﾋﾟﾝ	2	[OBT]
19	524W2-42491		NUT	ﾅｯﾄ	2	[OBT]
20	524W2-42401		YOKE	ﾖｰｸ	2	[OBT]
21	214A8-52051		FITTING	ﾌｨｯﾃｨﾝｸﾞ	2	[OBT]
22	54602-42271		BUSHING	ﾌﾞｯｼﾝｸﾞ	2	[OBT]
23	54602-42181		PIN	ﾋﾟﾝ	2	[OBT]
24	02100-00025		RING,SNAP	ｽﾅｯﾌﾟﾘﾝｸﾞ	2	[OBT]
A1	24634-30601		HUB-ASSY,REAR	ﾘﾔｰﾊﾌﾞｱｯｾﾝ	2	[OBT] INC.25-30
25	23814-30064		HUB	ﾊﾌﾞ	2	[OBT]
26	24354-42301		BOLT	ﾎﾞﾙﾄ	10	[OBT]
27	01400-10020		NUT	ﾅｯﾄ	10	[OBT]
28	03071-30211		BEARING	ﾍﾞｱﾘﾝｸﾞ	2	[OBT]
29	03071-30214		BEARING	ﾍﾞｱﾘﾝｸﾞ	2	[OBT]
30	03211-09501		SEAL,OIL	ｼｰﾙ	2	[OBT]
31	03192-10011		WASHER	ﾜｯｼｬ	2	[OBT]
32	03192-00011		NUT	ﾅｯﾄ	4	[OBT]
33	22654-32281		CAP	ｷｬｯﾌﾟ	2	[OBT]
34	25784-32411		PLATE	ﾌﾟﾚｰﾄ	2	[OBT]
35	25784-32421		PACKING	ﾊﾟｯｷﾝｸﾞ	2	[OBT]
36	01100-08020		BOLT	ﾎﾞﾙﾄ	6	[OBT]
37	02010-00008		WASHER	ﾜｯｼｬ	6	[OBT]
38	524W2-40202		CYLINDER,POWER	ｼﾘﾝﾀﾞ	1	[OBT]SEE FIG.84
39	01103-16040		BOLT	ﾎﾞﾙﾄ	4	[OBT]
40	02011-00016		WASHER	ﾜｯｼｬ	4	[OBT]
41	224W6-12601		SUPPORT	ｻﾎﾟｰﾄ	2	[OBT]
42	224W6-12611		BUSHING	ﾌﾞｯｼﾝｸﾞ	2	[OBT]
43	01100-20100		BOLT	ﾎﾞﾙﾄ	4	[OBT]
44	02010-00020		WASHER	ﾜｯｼｬ	4	[OBT]
45	25176-12371		SHIM,T-2.3	ｼﾑ	4	[OBT]
46	25176-12451		SHIM	ｼﾑ	AR	[OBT]
47	25844-32401		SHIM	ｼﾑ	AR	[OBT]
48	04901-00190		FITTING	ﾌｨｯﾃｨﾝｸﾞ	5	[OBT]

FIG.72 FENDER & HUB NUT

(F4044410) ﾌｪﾝﾀﾞ & ﾊﾌﾞﾅｯﾄ

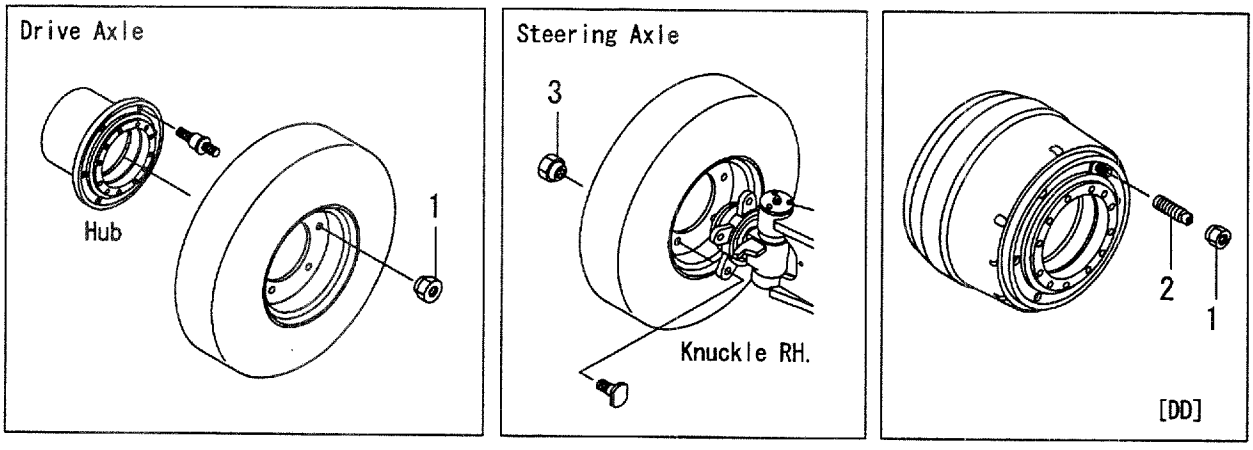

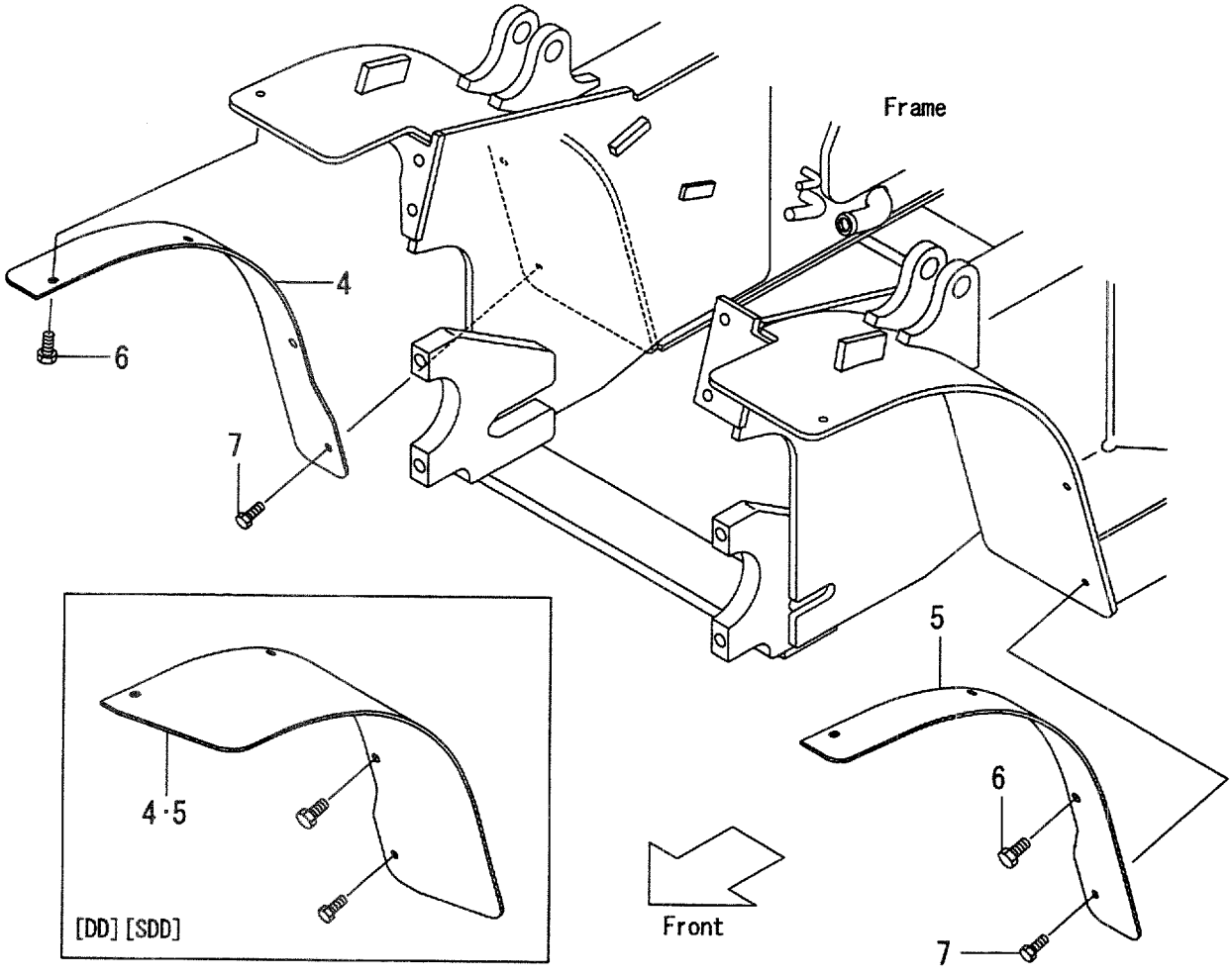

A:FD35C8 D:FD40T8 G:FD50T8 K:FG45T8
B:FD35T8 E:FD45C8 H:FG35T8 L:FG50T8
C:FD40C8 F:FD45T8 J:FG40T8

FIG.72
(F4044410)

Item No	Part No.	Mark	Description		Req'd	Remarks : Serial No.
1	23913-02041		NUT,HUB,FRONT	ﾅｯﾄ	12	
-	23813-00081		NUT,HUB,FRONT,OUTER	ﾅｯﾄ	12	[DD]
2	23813-00071		NUT,HUB,FRONT,INNER	ﾅｯﾄ	12	[DD]
3	24354-32311		NUT,HUB,REAR	ﾅｯﾄ	10	
4	535C7-42041		FENDER,RH	ﾌｪﾝﾀﾞ	1	A,B,H [TJ]
-	535C7-42041		FENDER,RH	ﾌｪﾝﾀﾞ	1	C,D,J [EX][TUJF]
-	535C7-42001		FENDER,RH	ﾌｪﾝﾀﾞ	1	[DD][EX/DD]
-	535C7-42021		FENDER,RH	ﾌｪﾝﾀﾞ	1	A,B,H [SDD][EX/SDD]
5	535C7-42051		FENDER,LH	ﾌｪﾝﾀﾞ	1	A,B,H [TJ]
-	535C7-42051		FENDER,LH	ﾌｪﾝﾀﾞ	1	C,D,J [EX][TUJF]
-	535C7-42011		FENDER,LH	ﾌｪﾝﾀﾞ	1	[DD][EX/DD]
-	535C7-42031		FENDER,LH	ﾌｪﾝﾀﾞ	1	A,B,H [SDD][EX/SDD]
6	01186-12025		BOLT	ﾎﾞﾙﾄ	6	
7	01186-10025		BOLT	ﾎﾞﾙﾄ	2	

FIG.73 FRONT WHEEL
(F4044420) フロントホイール

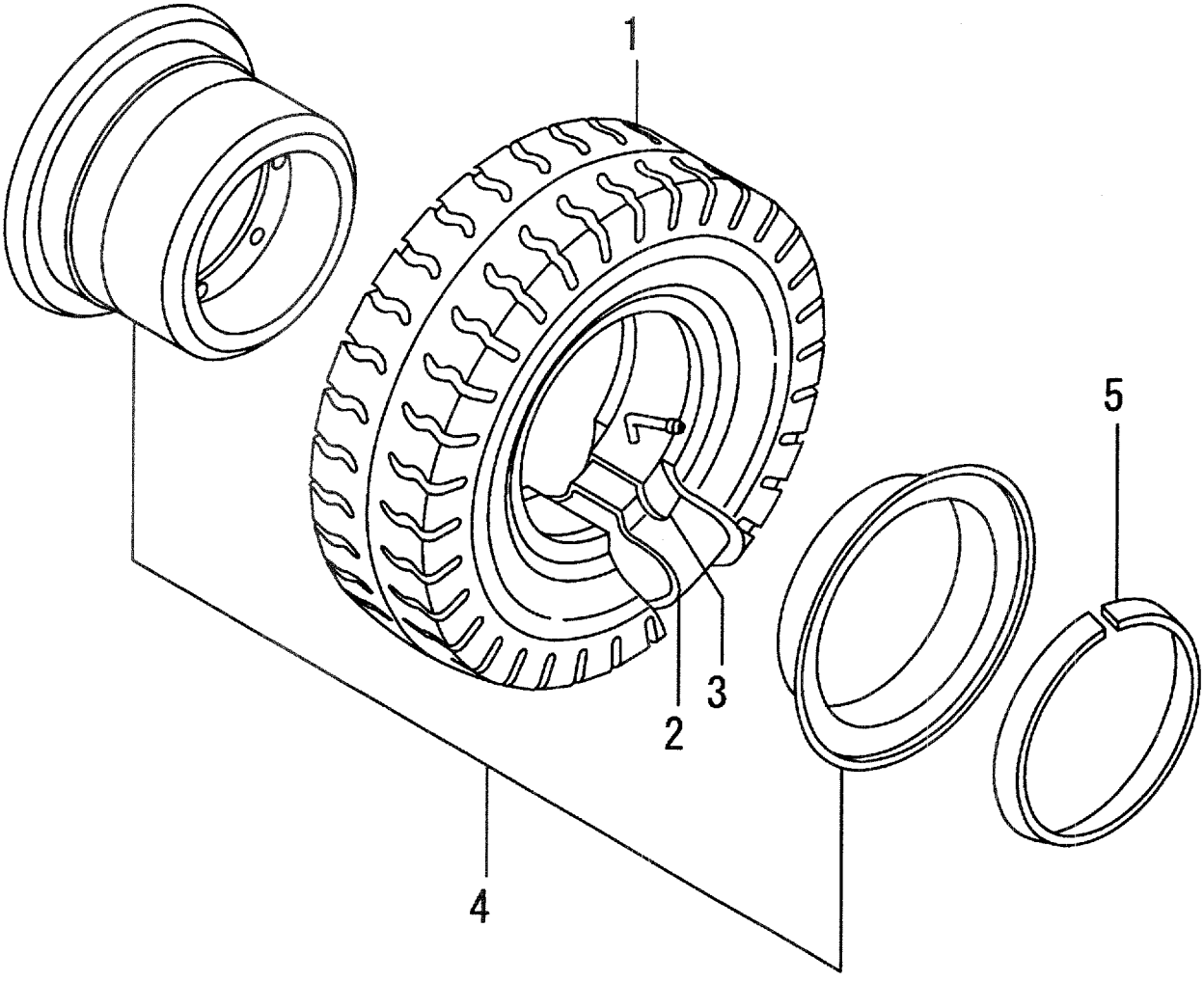

A:FD35C8 D:FD40T8 G:FD50T8 K:FG45T8
B:FD35T8 E:FD45C8 H:FG35T8 L:FG50T8
C:FD40C8 F:FD45T8 J:FG40T8

FIG.73
(F4044420)

Item No	Part No.	Mark	Description		Req'd	Remarks : Serial No.
A1	23954-40102		WHEEL-ASSY,FRONT	ﾌﾛﾝﾄﾎｲｰﾙｱｯｾﾝ	2	A,B,C,D,H,J INC.1-5
-	54356-80701		WHEEL-ASSY,FRONT	ﾌﾛﾝﾄﾎｲｰﾙｱｯｾﾝ	2	E,F,G,K,L INC.1-5
-	54356-80701		WHEEL-ASSY,FRONT	ﾌﾛﾝﾄﾎｲｰﾙｱｯｾﾝ	2	C,D,J [EX] INC.1-5
-	54356-80502		WHEEL-ASSY,FRONT	ﾌﾛﾝﾄﾎｲｰﾙｱｯｾﾝ	2	A,B,H [EX] INC.1-5
A2	23814-40251		TIRE-ASSY,FRONT	ﾀｲﾔｱｯｾﾝ	2	A,B,C,D,H,J INC.1-3
-	NO PART NO.		TIRE-ASSY,FRONT	ﾀｲﾔｱｯｾﾝ	2	E,F,G,K,L INC.1-3
-	NO PART NO.		TIRE-ASSY,FRONT	ﾀｲﾔｱｯｾﾝ	2	C,D,J [EX] INC.1-3
-	54356-81301		TIRE-ASSY,FRONT	ﾀｲﾔｱｯｾﾝ	2	A,B,H [EX] INC.1-3
1	06001-90016		TIRE,9.00-16-14PR(I)	ﾀｲﾔ	2	A,B,C,D,H,J (BS,DUN,TOY,YOK:STD)
-	06006-30015		TIRE,300-15-18PR(I)	ﾀｲﾔ	2	E,F,G,K,L (BS,DUN,TOY,YOK:STD)
-	06006-30015		TIRE,8.25-15-14PR(I)	ﾀｲﾔ	2	C,D,J [EX](BS,DUN,TOY,YOK:STD)
-	06006-82515		TIRE,8.25-15-14PR(I)	ﾀｲﾔ	2	A,B,H [EX](BS,DUN,TOY,YOK:STD)
2	06711-90016		TUBE	ﾁｭｰﾌﾞ	2	A,B,C,D,H,J
-	06716-30015		TUBE	ﾁｭｰﾌﾞ	2	E,F,G,K,L
-	06716-30015		TUBE	ﾁｭｰﾌﾞ	2	C,D,J [EX]
-	06712-82515		TUBE	ﾁｭｰﾌﾞ	2	A,B,H [EX]
3	06701-90016		FLAP	ﾌﾗｯﾌﾟ	2	A,B,C,D,H,J
-	06706-30015		FLAP	ﾌﾗｯﾌﾟ	2	E,F,G,K,L
-	06706-30015		FLAP	ﾌﾗｯﾌﾟ	2	C,D,J [EX]
-	06701-82515		FLAP	ﾌﾗｯﾌﾟ	2	A,B,H [EX]
4	23954-40302		RIM,7.00N-16,SDC	ﾘﾑ	2	A,B,C,D,H,J INC.5
-	54356-80801		RIM,8.00V-15	ﾘﾑ	2	E,F,G,K,L INC.5
-	54356-80801		RIM	ﾘﾑ	2	C,D,J [EX] INC.5
-	23914-40302		RIM,6.50T-15	ﾘﾑ	2	A,B,H [EX] INC.5
5	23954-42011		RING,SIDE	ﾘﾝｸﾞ	2	A,B,C,D,H,J
-	54356-82041		RING,SIDE	ﾘﾝｸﾞ	2	E,F,G,K,L
-	54356-82041		RING,SIDE	ﾘﾝｸﾞ	2	C,D,J [EX]
-	23914-42021		RING,SIDE	ﾘﾝｸﾞ	2	A,B,H [EX]

FIG.74 FRONT WHEEL [TJF][TJF30][TF][TF82]

(F4044430) フロントホイール

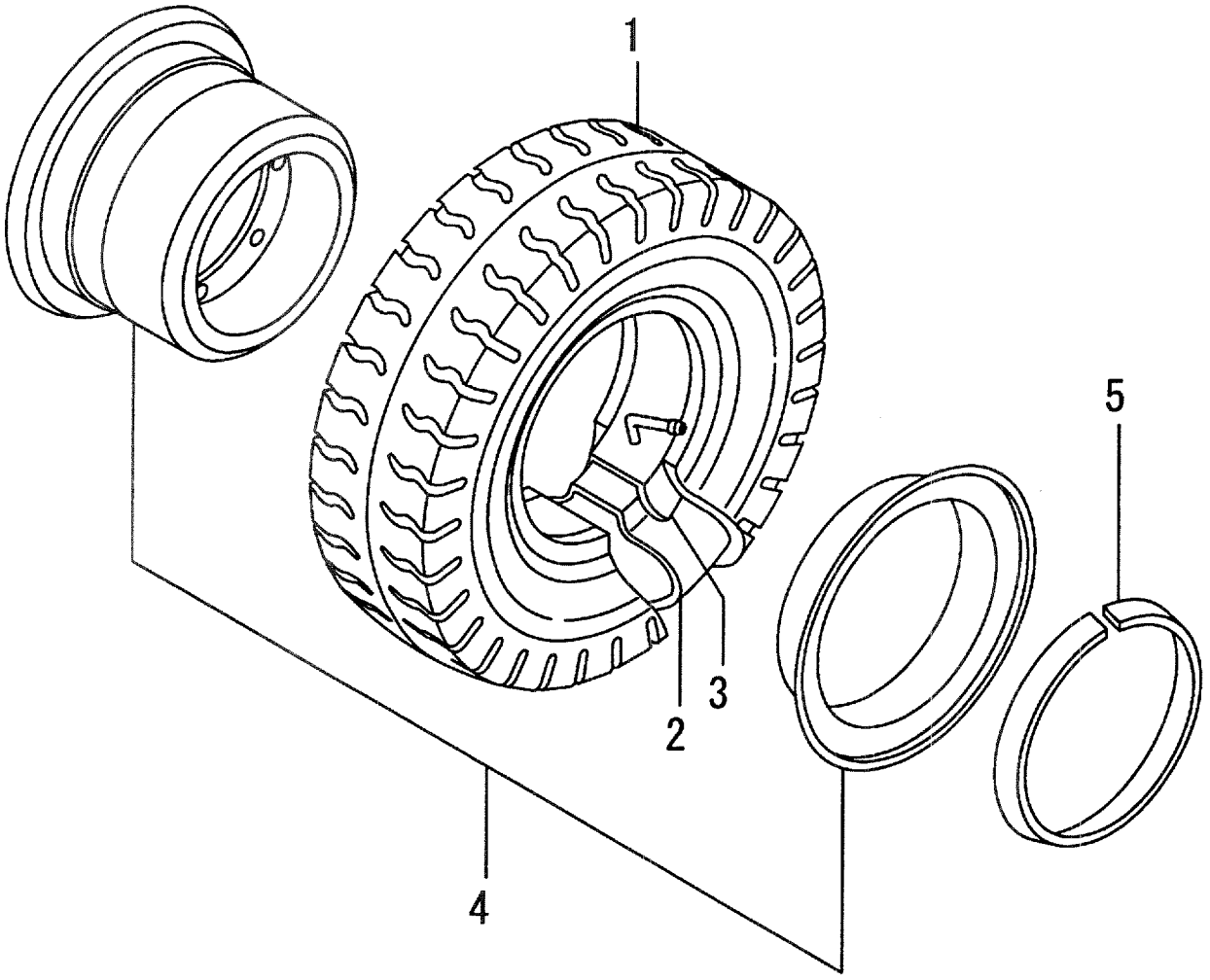

A:FD35C8 D:FD40T8 G:FD50T8 K:FG45T8
B:FD35T8 E:FD45C8 H:FG35T8 L:FG50T8
C:FD40C8 F:FD45T8 J:FG40T8

FIG.74
(F4044430)

Item No	Part No.	Mark	Description		Req'd	Remarks : Serial No.
A1	54356-80502		WHEEL-ASSY,FRONT	ﾌﾛﾝﾄﾎｲｰﾙｱｯｾﾝ	2	A,B,H [TJF] INC.1-5
-	54356-80701		WHEEL-ASSY,FRONT	ﾌﾛﾝﾄﾎｲｰﾙｱｯｾﾝ	2	C,D,E,F,G,J,K,L [TJF] INC.1-5
-	54356-80701		WHEEL-ASSY,FRONT	ﾌﾛﾝﾄﾎｲｰﾙｱｯｾﾝ	2	A,B,H [TJF30] INC.1-5
-	23954-40102		WHEEL-ASSY,FRONT	ﾌﾛﾝﾄﾎｲｰﾙｱｯｾﾝ	2	A,B,C,D,H [TF] INC.1-5
-	23914-40102		WHEEL-ASSY,FRONT	ﾌﾛﾝﾄﾎｲｰﾙｱｯｾﾝ	2	A,B,H [TF82] INC.1-5
A2	54356-81301		TIRE-ASSY,FRONT	ﾀｲﾔｱｯｾﾝ	2	A,B,H [TJF] INC.1-3
-	NO PART NO.		TIRE-ASSY,FRONT	ﾀｲﾔｱｯｾﾝ	2	C,D,E,F,G,J,K,L [TJF] INC.1-3
-	NO PART NO.		TIRE-ASSY,FRONT	ﾀｲﾔｱｯｾﾝ	2	A,B,H [TJF30] INC.1-3
-	23814-40251		TIRE-ASSY,FRONT	ﾀｲﾔｱｯｾﾝ	2	A,B,C,D,H [TF] INC.1-3
-	23914-40202		TIRE-ASSY,FRONT	ﾀｲﾔｱｯｾﾝ	2	A,B,H [TF82] INC.1-3
1	06006-82515		TIRE,8.25-15-14PR(I)	ﾀｲﾔ	2	A,B,H [TJF](BS,DUN,TOY,YOK:STD)
-	06006-30015		TIRE,300-15-18PR(I)	ﾀｲﾔ	2	C,D,E,F,G,J,K,L [TJF](BS,DUN,TOY,YOK:STD)
-	06006-30015		TIRE,300-15-18PR(I)	ﾀｲﾔ	2	A,B,H [TJF30] (BS,DUN,TOY,YOK:STD)
-	06001-90016		TIRE,9.00-16-14PR(I)	ﾀｲﾔ	2	A,B,C,D,H [TF](BS,DUN,TOY,YOK:STD)
-	06001-82515		TIRE,8.25-15-14PR(I)	ﾀｲﾔ	2	A,B,H [TF82](BS,DUN,TOY,YOK:STD)
2	06712-82515		TUBE	ﾁｭｰﾌﾞ	2	A,B,H [TJF][TF82]
-	06712-82515		TUBE	ﾁｭｰﾌﾞ	2	H [TF82]
-	06716-30015		TUBE	ﾁｭｰﾌﾞ	2	C,D,E,F,G,J,K,L [TJF]
-	06716-30015		TUBE	ﾁｭｰﾌﾞ	2	A,B,H [TJF30]
-	06711-90016		TUBE	ﾁｭｰﾌﾞ	2	A,B,C,D,H [TF]
3	06701-82515		FLAP	ﾌﾗｯﾌﾟ	2	A,B,H [TJF][TF82]
-	06701-82515		FLAP	ﾌﾗｯﾌﾟ	2	H [TF82]
-	06706-30015		FLAP	ﾌﾗｯﾌﾟ	2	C,D,E,F,G,J,K,L [TJF]
-	06706-30015		FLAP	ﾌﾗｯﾌﾟ	2	A,B,H [TJF30]

FIG.74 FRONT WHEEL [TJF][TJF30][TF][TF82]

(F4044430) フロントホイール

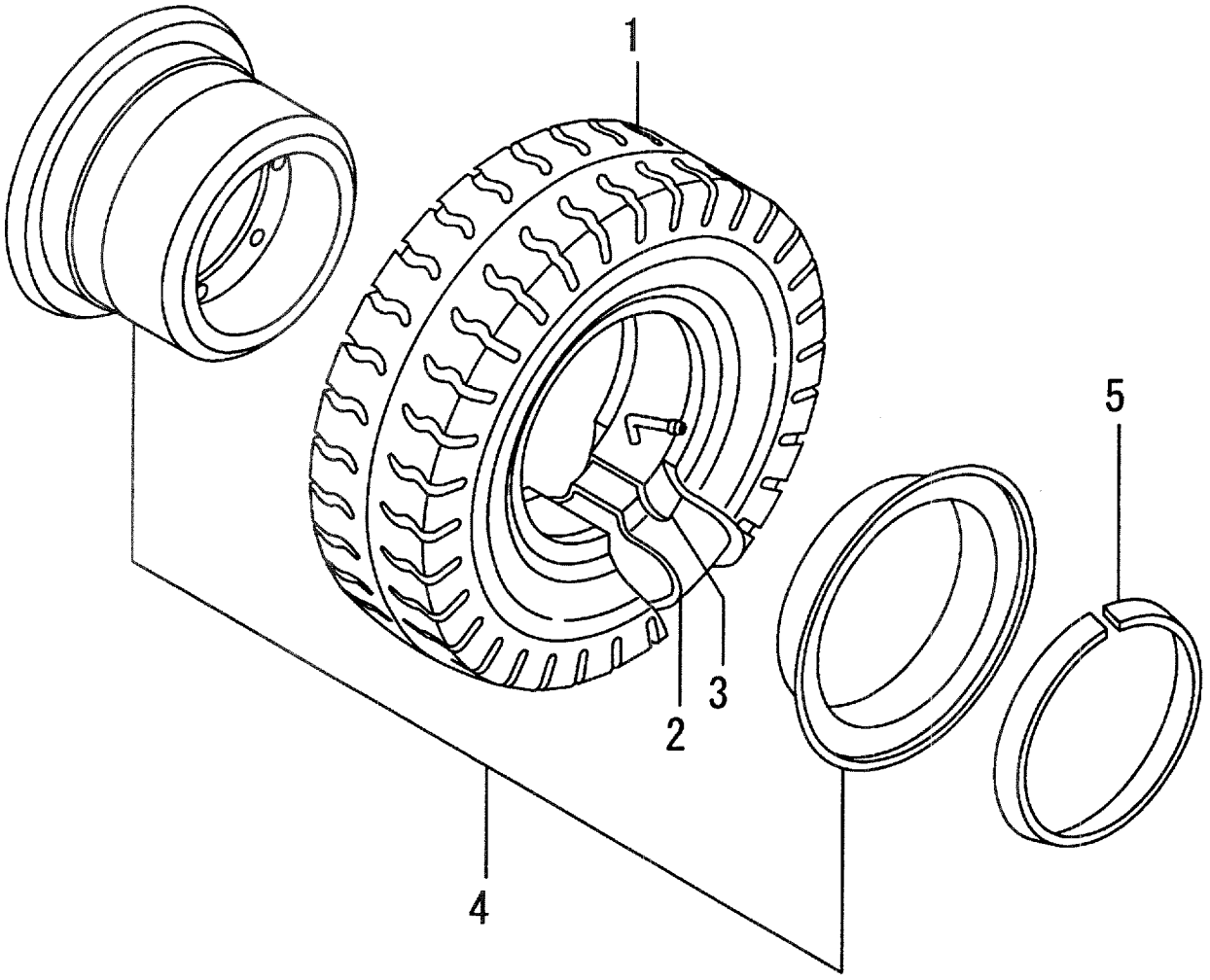

A:FD35C8 D:FD40T8 G:FD50T8 K:FG45T8
B:FD35T8 E:FD45C8 H:FG35T8 L:FG50T8
C:FD40C8 F:FD45T8 J:FG40T8

FIG.74
(F4044430)

Item No	Part No.	Mark	Description		Req'd	Remarks : Serial No.
-	06701-90016		FLAP	ﾌﾗｯﾌﾟ	2	A,B,C,D,H [TF]
4	23914-40302		RIM,6.50T-15R	ﾘﾑ	2	A,B,H [TJF][TF82] INC.5
-	23914-40302		RIM,6.50T-15R	ﾘﾑ	2	H [TF82] INC.5
-	54356-80801		RIM,8.00V-15	ﾘﾑ	2	C,D,E,F,G,J,K,L [TJF] INC.5
-	54356-80801		RIM,8.00V-15	ﾘﾑ	2	A,B,H [TJF30] INC.5
-	23954-40302		RIM,7.00H-16SD	ﾘﾑ	2	A,B,C,D,H [TF] INC.5
5	23914-42021		RING,SIDE	ﾘﾝｸﾞ	2	A,B,H [TJF][TF82]
-	23914-42021		RING,SIDE	ﾘﾝｸﾞ	2	H [TF82]
-	54356-82041		RING,SIDE	ﾘﾝｸﾞ	2	C,D,E,F,G,J,K,L [TJF]
-	54356-82041		RING,SIDE	ﾘﾝｸﾞ	2	A,B,H [TJF30]
-	23954-42011		RING,SIDE	ﾘﾝｸﾞ	2	A,B,C,D,H [TF]

FIG.75 FRONT WHEEL [TUF][TUJF][TUJF30]

(F4044440) フロントホイール

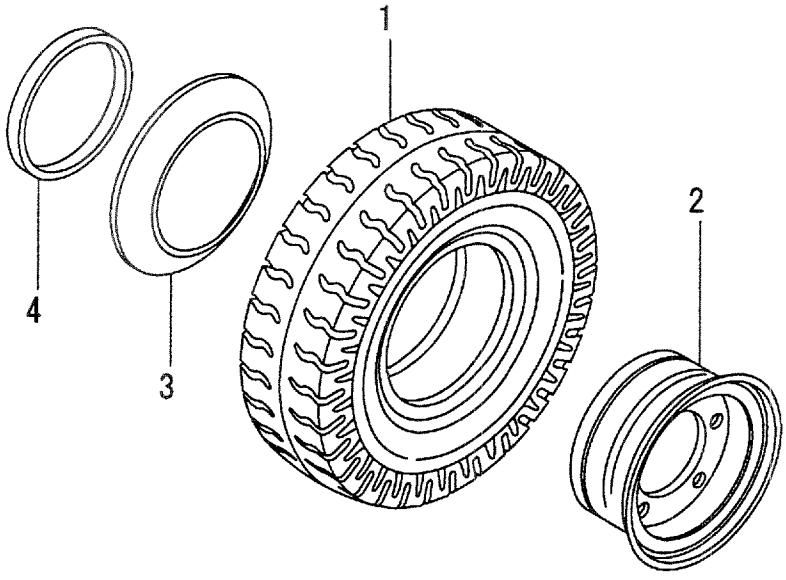

[TUF]

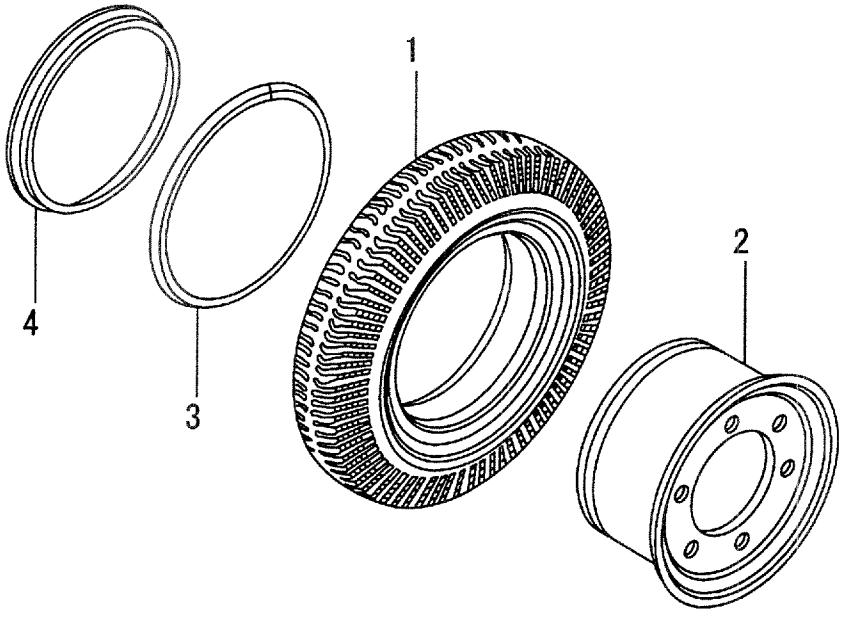

[TUJF] [TUJF30]

A:FD35C8 D:FD40T8 G:FD50T8 K:FG45T8
B:FD35T8 E:FD45C8 H:FG35T8 L:FG50T8
C:FD40C8 F:FD45T8 J:FG40T8

FIG.75
(F4044440)

Item No	Part No.	Mark	Description		Req'd	Remarks : Serial No.
A1	54356-80201		WHEEL-ASSY,FRONT	ﾌﾛﾝﾄﾎｲｰﾙｱｯｾﾝ	2	A,B,C,D,H,J [TUF] INC.1-4
-	54356-81401		WHEEL-ASSY,FRONT	ﾌﾛﾝﾄﾎｲｰﾙｱｯｾﾝ	2	A,B,H [TUJF30] INC.1-4
-	54356-81401		WHEEL-ASSY	ﾎｲｰﾙｱｯｾﾝ	2	C,D,E,F,G,J,K,L [TUJF] INC.1-4
-	53916-80101		WHEEL-ASSY,FRONT	ﾌﾛﾝﾄﾎｲｰﾙｱｯｾﾝ	2	A,B,H [TUJF] INC.1-3
1	06801-90016		TIRE,9.00-16,LUG,UNI	ﾀｲﾔ	2	A,B,C,D,H,J [TUF](AIC)
-	06802-30015		TIRE,300-15,S-LUG,UN	ﾀｲﾔ	2	A,B,H [TUJF30](AIC)
-	06802-30015		TIRE,300-15,S-LUG,UN	ﾀｲﾔ	2	C,D,E,F,G,J,K,L [TUJF](AIC)
-	06802-82515		TIRE,8.25-15,S-LUG,U	ﾀｲﾔ	2	A,B,H [TUJF](AIC)
2	54356-80301		RIM,7.00N-16	ﾘﾑ	2	A,B,C,D,H,J [TUF] INC.3,4
-	54356-81501		RIM,8.00V-15	ﾘﾑ	2	A,B,H [TUJF30] INC.3,4
-	54356-81501		RIM,8.00V-15	ﾘﾑ	2	C,D,E,F,G,J,K,L [TUJF] INC.3,4
-	53916-80201		RIM,6.50T-15	ﾘﾑ	2	A,B,H [TUJF] INC.3
3	54356-82011		RING,SIDE	ﾘﾝｸﾞ	2	A,B,C,D,H,J [TUF]
-	54356-82101		FLANGE,SIDE	ﾌﾗﾝｼﾞ	2	A,B,H [TUJF30]
-	54356-82101		FLANGE,SIDE	ﾌﾗﾝｼﾞ	2	C,D,E,F,G,J,K,L [TUJF]
-	514T6-82021		RING,SIDE	ﾘﾝｸﾞ	2	A,B,H [TUJF]
4	54356-82021		RING,LOCK	ﾘﾝｸﾞ	2	A,B,C,D,H,J [TUF]
-	54356-82111		RING,LOCK	ﾘﾝｸﾞ	2	A,B,H [TUJF30]
-	54356-82111		RING,LOCK	ﾘﾝｸﾞ	2	C,D,E,F,G,J,K,L [TUJF]

FIG.76 FRONT WHEEL [TUSF][TUWF][TUGF]

(F4044450) フロントホイール

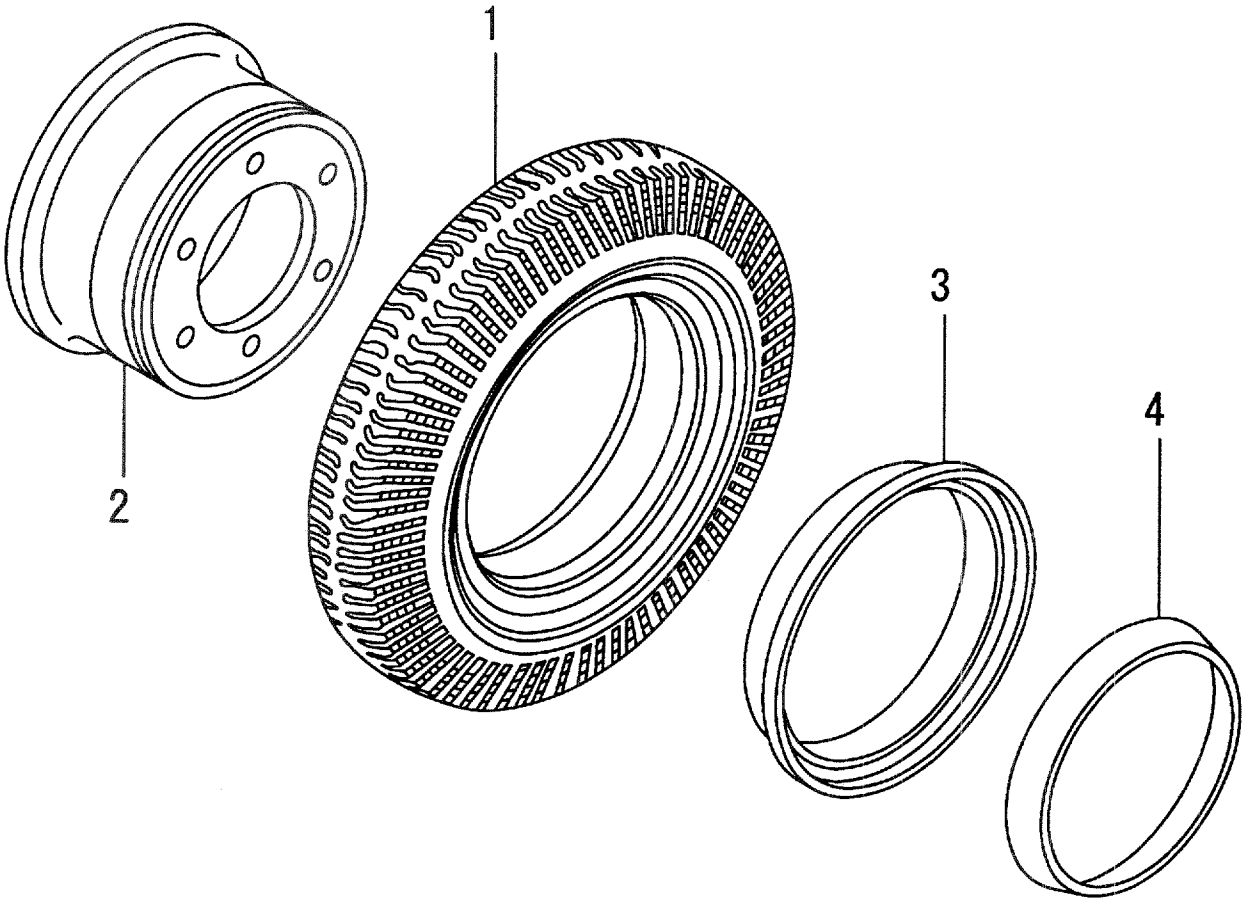

A:FD35C8 D:FD40T8 G:FD50T8 K:FG45T8
B:FD35T8 E:FD45C8 H:FG35T8 L:FG50T8
C:FD40C8 F:FD45T8 J:FG40T8

FIG.76
(F4044450)

Item No	Part No.	Mark	Description		Req'd	Remarks : Serial No.
A1	55956-80221		WHEEL-ASSY,FRONT	ﾌﾛﾝﾄﾎｲｰﾙｱｯｾﾝ	2	A,B,H [TUSF] INC.1-4
-	528C6-80051		WHEEL-ASSY,FRONT	ﾌﾛﾝﾄﾎｲｰﾙｱｯｾﾝ	2	C,D,E,F,G,J,K,L [TUSF] INC.1-4
-	55956-80201		WHEEL-ASSY,FRONT	ﾌﾛﾝﾄﾎｲｰﾙｱｯｾﾝ	2	A,B,H [TUWF] INC.1-4
-	528C6-80001		WHEEL-ASSY,FRONT	ﾌﾛﾝﾄﾎｲｰﾙｱｯｾﾝ	2	C,D,E,F,G,J,K,L [TUWF] INC.1-4
-	55956-80211		WHEEL-ASSY,FRONT	ﾌﾛﾝﾄﾎｲｰﾙｱｯｾﾝ	2	A,B,H [TUGF] INC.1-4
-	528C6-80011		WHEEL-ASSY,FRONT	ﾌﾛﾝﾄﾎｲｰﾙｱｯｾﾝ	2	C,D,E,F,G,J,K,L [TUGF] INC.1-4
1	06851-90016		TIRE,SOFTONE,9.00-16	ﾀｲﾔ	2	A,B,H [TUSF](AIC)
-	528C6-82041		TIRE,SOFTONE,300-15	ﾀｲﾔ	2	C,D,E,F,G,J,K,L [TUSF](AIC)
-	06841-90016		TIRE,COLOR-WHITE,9.00-16	ﾀｲﾔ	2	A,B,H [TUWF](AIC)
-	528C6-82001		TIRE,COLOR-WHITE,300-15	ﾀｲﾔ	2	C,D,E,F,G,J,K,L [TUWF](AIC)
-	06843-90016		TIRE,COLOR-GREEN,9.00-16	ﾀｲﾔ	2	A,B,H [TUGF](AIC)
-	528C6-82011		TIRE,COLOR-GREEN,300-15	ﾀｲﾔ	2	C,D,E,F,G,J,K,L [TUGF](AIC)
2	54356-80301		RIM,7.00N-16	ﾘﾑ	2	A,B,H [TUSF][TUWF][TUGF] INC.3,4
-	54356-81501		RIM,8.00V-15	ﾘﾑ	2	C,D,E,F,G,J,K,L [TUSF][TUWF][TUGF] INC.3,4
3	54356-82011		RING,SIDE	ﾘﾝｸﾞ	2	A,B,H [TUSF][TUWF][TUGF]
-	54356-82101		FLANGE,SIDE	ﾌﾗﾝｼﾞ	1	C,D,E,F,G,J,K,L [TUSF][TUWF][TUGF]
4	54356-82021		RING,LOCK	ﾘﾝｸﾞ	2	A,B,H [TUSF][TUWF][TUGF]
-	54356-82111		RING,LOCK	ﾘﾝｸﾞ	2	C,D,E,F,G,J,K,L [TUSF][TUWF][TUGF]

FIG.77 FRONT WHEEL [DD/TW,TJW][SDD/TW82,TJW82]

(F4044460) フロントホイール

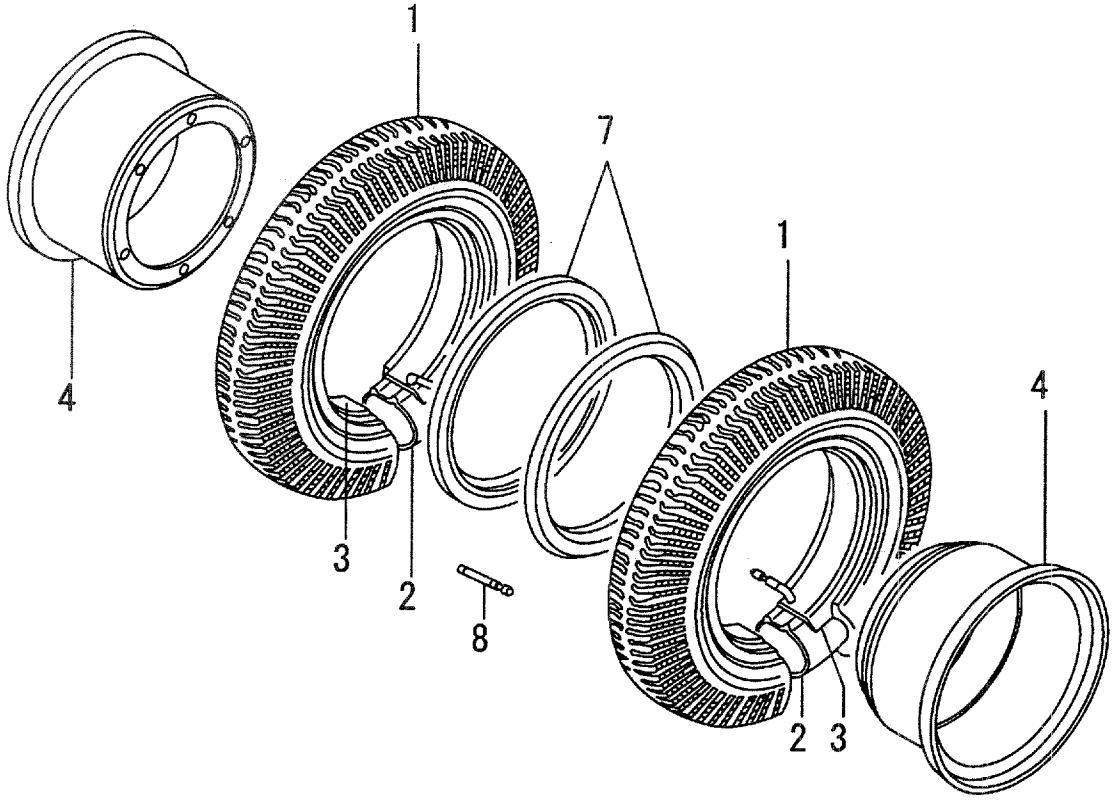

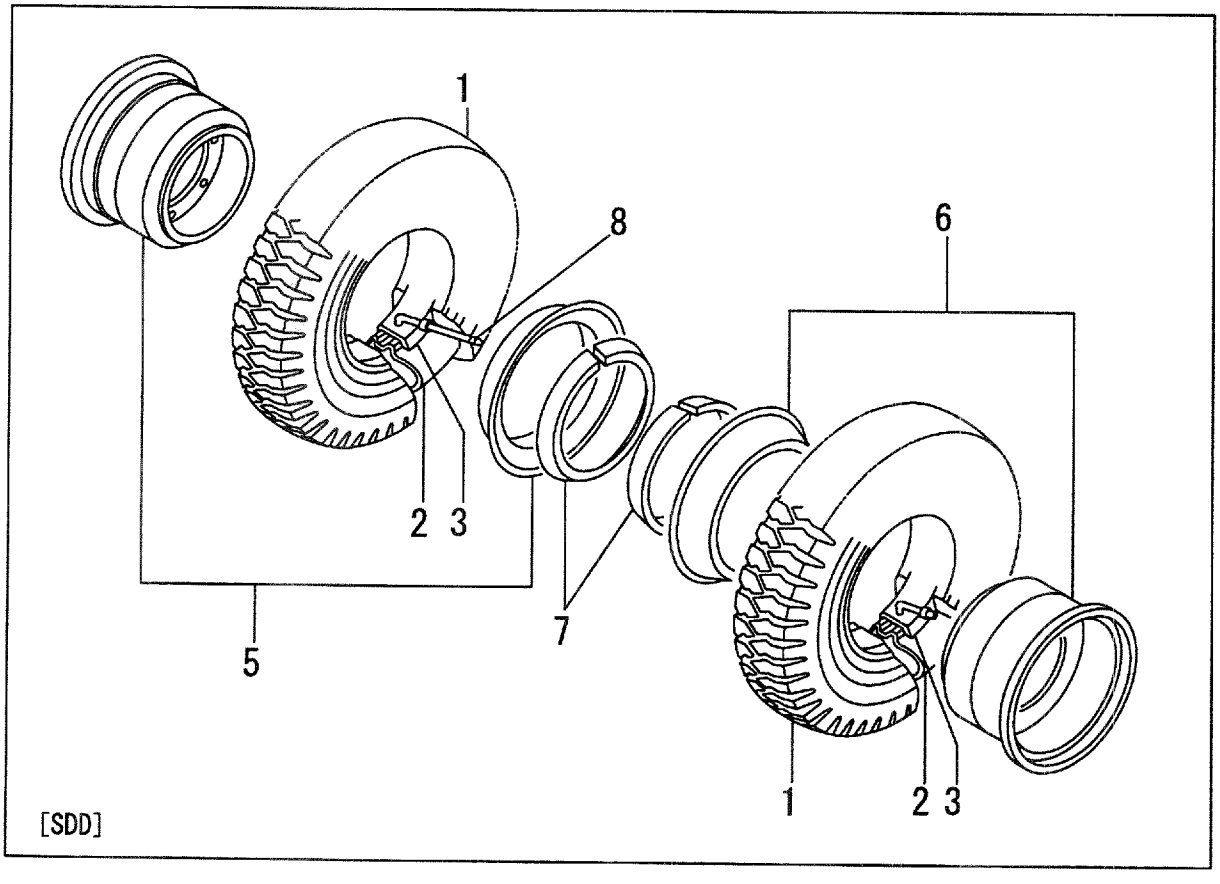

A:FD35C8 D:FD40T8 G:FD50T8 K:FG45T8
B:FD35T8 E:FD45C8 H:FG35T8 L:FG50T8
C:FD40C8 F:FD45T8 J:FG40T8

FIG.77
(F4044460)

Item No	Part No.	Mark	Description		Req'd	Remarks : Serial No.
A1	53917-40101		WHEEL-ASSY,FRONT	ﾌﾛﾝﾄﾎｲｰﾙｱｯｾﾝ	4	[TW/DD] INC.1-4,7,8
-	524W7-40101		WHEEL-ASSY,FRONT	ﾌﾛﾝﾄﾎｲｰﾙｱｯｾﾝ	4	[TJW/DD] INC.1-4,7,8
-	524W7-40101		WHEEL-ASSY,FRONT	ﾌﾛﾝﾄﾎｲｰﾙｱｯｾﾝ	4	A,B,H [EX] INC.1-4,7,8
A2	23914-40102		WHEE-ASSY,FRONTL,INNER	ﾌﾛﾝﾄﾎｲｰﾙｱｯｾﾝ	2	A,B,C,D,H,J [TW82/SDD] INC.1-3,5,6,7
-	54356-80502		WHEE-ASSY,FRONTL,INNER	ﾌﾛﾝﾄﾎｲｰﾙｱｯｾﾝ	2	A,B,C,D,H,J [TJW82/SDD] INC.1-3,5,6,7
A3	54357-40702		WHEE-ASSY,FRONTL,OUTER	ﾌﾛﾝﾄﾎｲｰﾙｱｯｾﾝ	2	A,B,C,D,H,J [TW82/SDD] INC.1-3,5,6,7
-	54356-80902		WHEE-ASSY,FRONTL,OUTER	ﾌﾛﾝﾄﾎｲｰﾙｱｯｾﾝ	2	A,B,C,D,H,J [TJW82/SDD] INC.1-3,5,6,7
A4	53917-40201		TIRE-ASSY,FRONT	ﾀｲﾔｱｯｾﾝ	4	[TW/DD] INC.1,2,3
-	524W7-40201		TIRE-ASSY,FRONT	ﾀｲﾔｱｯｾﾝ	4	[TJW/DD] INC.1,2,3
-	524W7-40201		TIRE-ASSY,FRONT	ﾀｲﾔｱｯｾﾝ	4	A,B,H [EX] INC.1,2,3
-	23914-40202		TIRE-ASSY,FRONT	ﾀｲﾔｱｯｾﾝ	4	A,B,C,D,H,J [TW82/SDD] INC.1,2,3
-	54356-81301		TIRE-ASSY,FRONT	ﾀｲﾔｱｯｾﾝ	4	A,B,C,D,H,J [TJW82/SDD] INC.1,2,3
1	06001-75016		TIRE,7.50-16-8PR(I)	ﾀｲﾔ	4	[TW/DD] (BS,DUN,TOY,YOK:STD)
-	06006-75016		TIRE,7.50-16-12PR(I)	ﾀｲﾔ	4	[TJW/DD] (BS,DUN,TOY,YOK:STD)
-	06006-75016		TIRE,8.25-15-14PR(I)	ﾀｲﾔ	4	A,B,H [EX]
-	06001-82515		TIRE,8.25-15-14PR(I)	ﾀｲﾔ	4	A,B,C,D,H,J [TW82/SDD] (BS,DUN,TOY,YOK:STD)
-	06006-82515		TIRE,8.25-15-14PR(I)	ﾀｲﾔ	4	A,B,C,D,H,J [TJW82/SDD] (BS,DUN,TOY,YOK:STD)
2	06711-75016		TUBE	ﾁｭｰﾌﾞ	4	[TW/DD]
-	06712-75016		TUBE	ﾁｭｰﾌﾞ	4	[TJW/DD]
-	06712-75016		TUBE	ﾁｭｰﾌﾞ	4	A,B,H [EX]
-	06712-82515		TUBE	ﾁｭｰﾌﾞ	4	A,B,C,D,H,J [TW82/SDD][TJW82/SDD]
3	06701-75016		FLAP	ﾌﾗｯﾌﾟ	4	[TW/DD]
-	06702-75016		FLAP	ﾌﾗｯﾌﾟ	4	[TJW/DD]
-	06702-75016		FLAP	ﾌﾗｯﾌﾟ	4	A,B,H [EX]
-	06701-82515		FLAP	ﾌﾗｯﾌﾟ	4	A,B,C,D,H,J [TW82/SDD][TJW82/SDD]
4	53917-40301		RIM,6.00GS-16,SDC	ﾘﾑ	4	[TW/DD][TJW/DD] INC.7
-	53917-40301		RIM,6.00GS-16,SDC	ﾘﾑ	4	A,B,H [EX] INC.7
5	23914-40302		RIM,INNER,6.50T-15	ﾘﾑ	2	A,B,C,D,H,J [TW82/SDD][TJW82/SDD] INC.7

FIG.77 FRONT WHEEL [DD/TW,TJW][SDD/TW82,TJW82]

(F4044460) フロントホイール

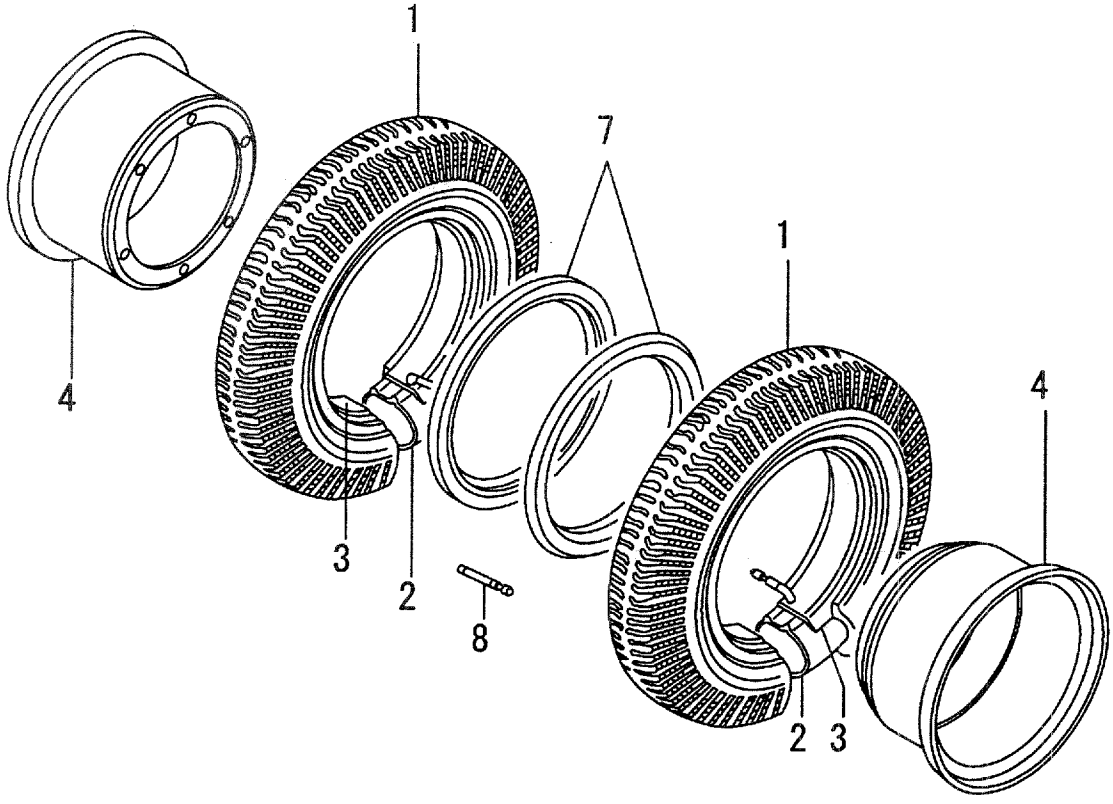

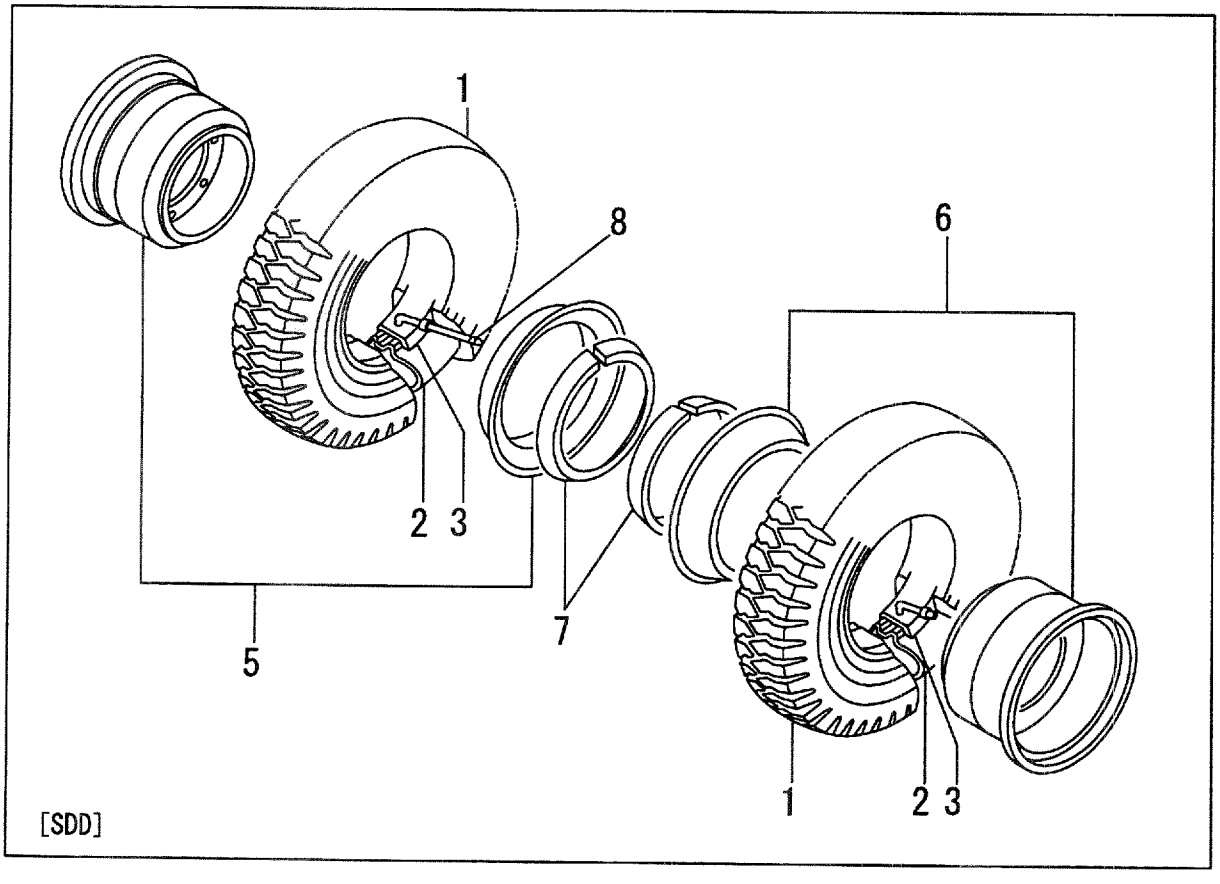

A:FD35C8 D:FD40T8 G:FD50T8 K:FG45T8
B:FD35T8 E:FD45C8 H:FG35T8 L:FG50T8
C:FD40C8 F:FD45T8 J:FG40T8

FIG.77
(F4044460)

Item No	Part No.	Mark	Description		Req'd	Remarks : Serial No.
6	54357-40601		RIM,OUTER,6.50T-15	ﾘﾑ	2	A,B,C,D,H,J [TW82/SDD][TJW82/SDD] INC.7
7	53917-42221		RING,SIDE	ﾘﾝｸﾞ	4	[TW/DD][TJW/DD]
-	53917-42221		RING,SIDE	ﾘﾝｸﾞ	4	A,B,H [EX]
-	23914-42021		RING,SIDE	ﾘﾝｸﾞ	4	A,B,C,D,H,J [TW82/SDD][TJW82/SDD]
8	06731-00120		TUBE,EXTENTION	ﾁｭｰﾌﾞ	2	[TW/DD][TJW/DD]
-	06731-00120		TUBE,EXTENSION	ﾁｭｰﾌﾞ	2	A,B,H [EX]

FIG.78 FRONT WHEEL [TUJW][TUSW][TUWW][TUGR]

(F4044470) フロントホイール

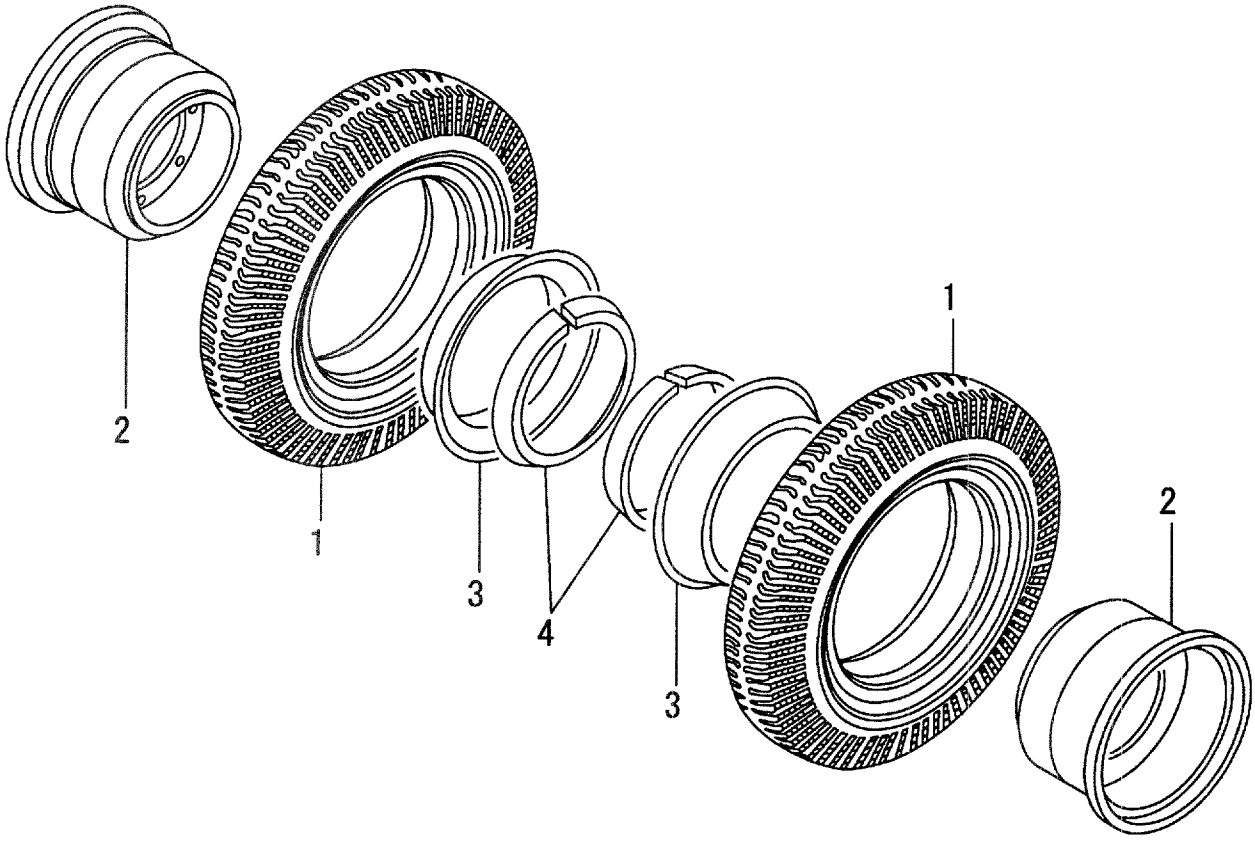

A:FD35C8 D:FD40T8 G:FD50T8 K:FG45T8
B:FD35T8 E:FD45C8 H:FG35T8 L:FG50T8
C:FD40C8 F:FD45T8 J:FG40T8

FIG.78
(F4044470)

Item No	Part No.	Mark	Description		Req'd	Remarks : Serial No.
A1	53916-80601		WHEEL-ASSY,FRONT	ﾌﾛﾝﾄﾎｲｰﾙｱｯｾﾝ	4	[TUJW] INC.1-4
-	55956-80322		WHEEL-ASSY,FRONT	ﾌﾛﾝﾄﾎｲｰﾙｱｯｾﾝ	4	[TUSW] INC.1-4
-	55956-80301		WHEEL-ASSY,FRONT	ﾌﾛﾝﾄﾎｲｰﾙｱｯｾﾝ	4	[TUWW] INC.1-4
-	55956-80311		WHEEL-ASSY,FRONT	ﾌﾛﾝﾄﾎｲｰﾙｱｯｾﾝ	4	[TUGW] INC.1-4
1	06802-75016		TIRE,7.50-16,S-LUG	ﾀｲﾔ	4	[TUJW](AIC)
-	06851-75016		TIRE,7.50-16	ﾀｲﾔ	4	[TUSW](AIC)
-	06841-75016		TIRE,7.50-16	ﾀｲﾔ	4	[TUWW](AIC)
-	06843-75016		TIRE,7.50-16	ﾀｲﾔ	4	[TUGR](AIC)
2	53916-80701		RIM,6.00GS-16,SDC	ﾘﾑ	4	[TUJW][TUSW][TUWW][TUGR] INC.3,4
3	53916-82521		RING,SIDE	ﾘﾝｸﾞ	4	[TUJW][TUSW][TUWW][TUGR]
4	53916-82531		RING,LOCK	ﾘﾝｸﾞ	4	[TUJW][TUSW][TUWW][TUGR]

FIG.79 REAR WHEEL [STD]

(F4044480) リヤーホイール

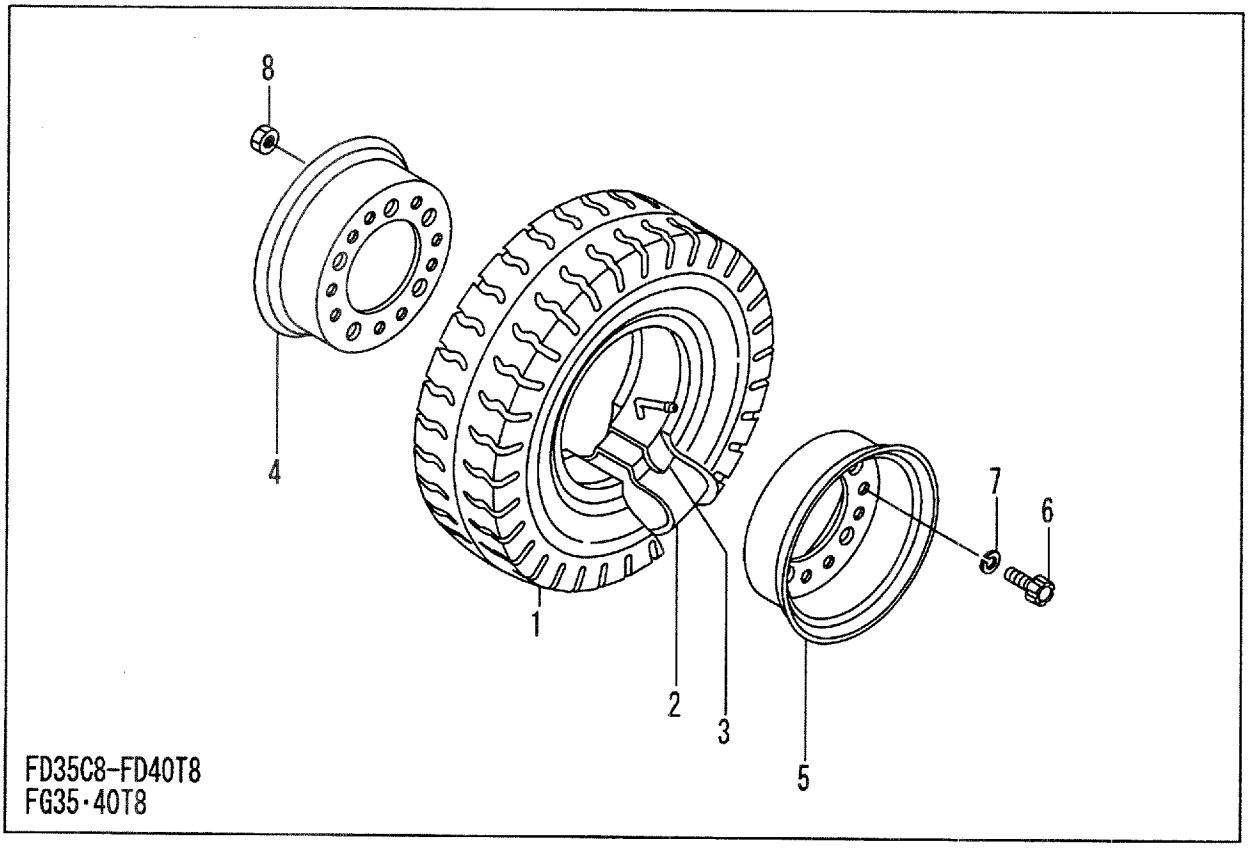

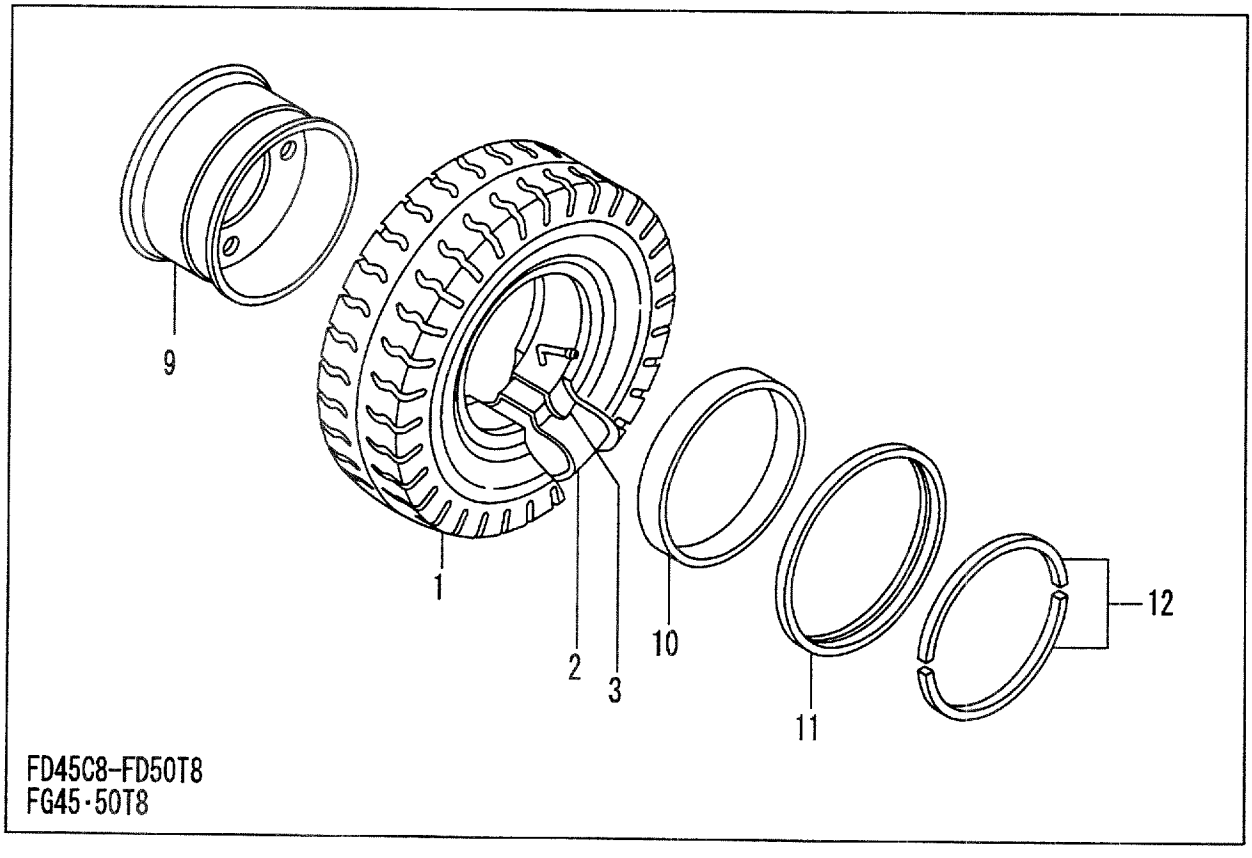

A:FD35C8 D:FD40T8 G:FD50T8 K:FG45T8
B:FD35T8 E:FD45C8 H:FG35T8 L:FG50T8
C:FD40C8 F:FD45T8 J:FG40T8

FIG.79
(F4044480)

Item No	Part No.	Mark	Description		Req'd	Remarks : Serial No.
A1	23814-40302		WHEEL-ASSY,REAR	ﾘｱﾎｲｰﾙｱｯｾﾝ	2	A,B,C,D,H,J INC.1-8
-	228A4-40301		WHEEL-ASSY,REAR	ﾘｱﾎｲｰﾙｱｯｾﾝ	2	E,F,G,K,L INC.1-3,9-12
-	55953-80101		WHEEL-ASSY,REAR	ﾘｱﾎｲｰﾙｱｯｾﾝ	2	A,B,C,D,H,J [EX] INC.1-8
A2	23814-40311		TIRE-ASSY,REAR	ﾀｲﾔｱｯｾﾝ	2	A,B,C,D,H,J INC.1-3
-	NO PART NO.		TIRE-ASSY,REAR	ﾀｲﾔｱｯｾﾝ	2	A,B,C,D,H,J [EX] INC.1-3
-	NO PART NO.		TIRE-ASSY,REAR	ﾀｲﾔｱｯｾﾝ	2	E,F,G,K,L INC.1-3
1	06001-70012		TIRE,7.00-12-12PR(I)	ﾀｲﾔ	2	A,B,C,D,H,J (BS,DUN,TOY,YOK:STD)
-	06006-70012		TIRE,7.00-12-12PR(I)	ﾀｲﾔ	2	A,B,C,D,H,J [EX](BS,DUN,TOY,YOK:STD)
-	06006-70012		TIRE,7.00-12-12PR(I)	ﾀｲﾔ	2	E,F,G,K,L (BS,DUN,TOY,YOK:STD)
2	06711-70012		TUBE	ﾁｭｰﾌﾞ	2	
3	06701-70012		FLAP	ﾌﾗｯﾌﾟ	2	
A3	22314-40101		RIM-ASSY,5.00S-12	ﾘﾑｱｯｾﾝ	2	A,B,C,D,H,J INC.4-8
4	22354-42001		RIM,INSIDE	ﾘﾑ	2	A,B,C,D,H,J
5	22354-42011		RIM,OUTSIDE	ﾘﾑ	2	A,B,C,D,H,J
6	514A3-82601		BOLT	ﾎﾞﾙﾄ	18	A,B,C,D,H,J
7	02011-00016		WASHER	ﾜｯｼｬ	18	A,B,C,D,H,J
8	01400-10016		NUT	ﾅｯﾄ	18	A,B,C,D,H,J
A4	54356-80651		RIM-ASSY,5.00S-12TB	ﾘﾑｱｯｾﾝ	2	E,F,G,K,L INC.9-12
9	54356-82071		RIM & DISK	ﾘﾑ & ﾃﾞｨｽｸ	2	E,F,G,K,L
10	53656-82041		BAND	ﾊﾞﾝﾄﾞ	2	E,F,G,K,L
11	53656-82051		FLANGE,SIDE	ﾌﾗﾝｼﾞ	2	E,F,G,K,L
12	53656-82061		RING,LOCK	ﾘﾝｸﾞ	2	E,F,G,K,L

FIG.80 REAR WHEEL [TR][TJR]

(F4044490) リヤーホイール

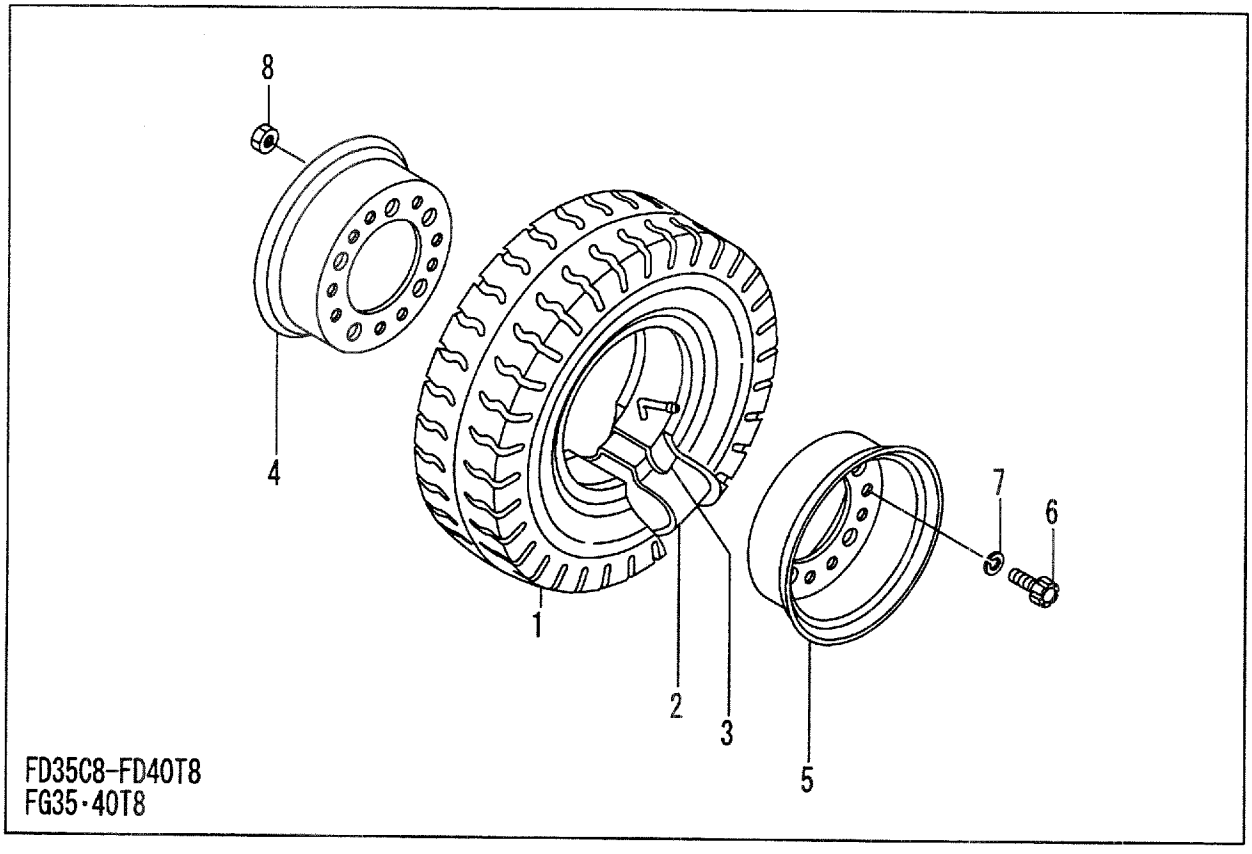

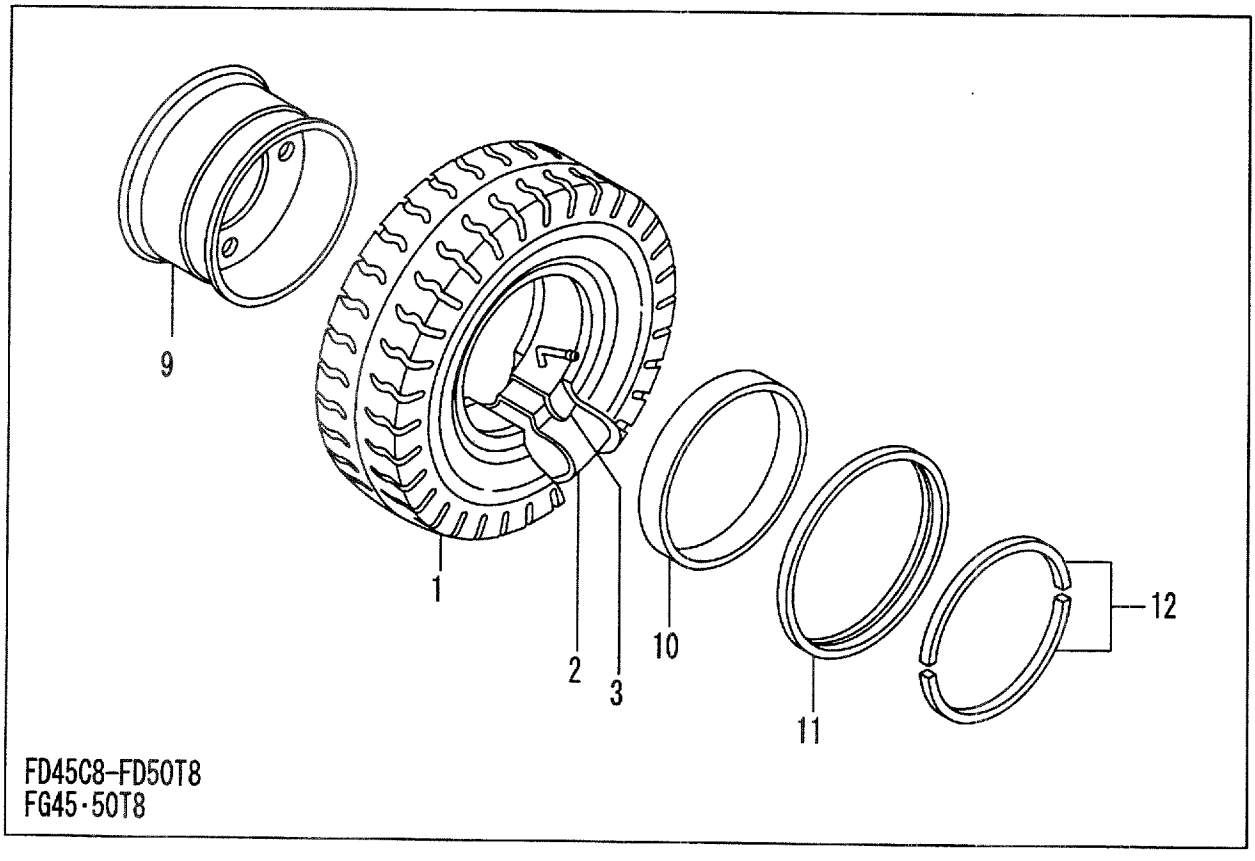

A:FD35C8 D:FD40T8 G:FD50T8 K:FG45T8
B:FD35T8 E:FD45C8 H:FG35T8 L:FG50T8
C:FD40C8 F:FD45T8 J:FG40T8

FIG.80
(F4044490)

Item No	Part No.	Mark	Description		Req'd	Remarks : Serial No.
A1	23814-40302		WHEEL-ASSY,REAR	ﾘｱﾎｲｰﾙｱｯｾﾝ	2	A,B,C,D,H,J [TR] INC.1-8
-	528C7-40301		WHEEL-ASSY,REAR	ﾘｱﾎｲｰﾙｱｯｾﾝ	2	E,F,G,K,L [TR] INC.1-3,9-12
-	55953-80101		WHEEL-ASSY,REAR	ﾘｱﾎｲｰﾙｱｯｾﾝ	2	A,B,C,D,H,J [TJR] INC.1-8
-	55953-80101		WHEEL-ASSY,REAR	ﾘｱﾎｲｰﾙｱｯｾﾝ	2	A,B,H [TJR/EX] INC.1-8
-	228A4-40301		WHEEL-ASSY,REAR	ﾘｱﾎｲｰﾙｱｯｾﾝ	2	E,F,G,K,L [TJR] INC.1-3,9-12
A2	23814-40311		TIRE-ASSY,REAR	ﾀｲﾔｱｯｾﾝ	2	[TR] INC.1-3
-	NO PART NO.		TIRE-ASSY,REAR	ﾀｲﾔｱｯｾﾝ	2	[TJR] INC.1-3
1	06001-70012		TIRE,7.00-12-12PR(I)	ﾀｲﾔ	2	[TR](BS,DUN,TOY,YOK:STD)
-	06006-70012		TIRE,7.00-12-12PR(I)	ﾀｲﾔ	2	[TJR](BS,DUN,TOY,YOK:STD)
-	06006-70012		TIRE,7.00-12-12PR(I)	ﾀｲﾔ	2	A,B,H [TJR/EX]
2	06711-70012		TUBE	ﾁｭｰﾌﾞ	2	[TR][TJR]
3	06701-70012		FLAP	ﾌﾗｯﾌﾟ	2	[TR][TJR]
A3	22314-40101		RIM-ASSY,5.00S-12	ﾘﾑｱｯｾﾝ	2	A,B,C,D,H,J [TR][TJR] INC.4-8
-	22314-40101		RIM-ASSY,5.00S-12	ﾘﾑｱｯｾﾝ	2	A,B,H [TJR/EX] INC.4-8
4	22354-42001		RIM,INSIDE	ﾘﾑ	2	A,B,C,D,H,J [TR][TJR]
-	22354-42001		RIM,INSIDE	ﾘﾑ	2	A,B,H [TJR/EX]
5	22354-42011		RIM,OUTSIDE	ﾘﾑ	2	A,B,C,D,H,J [TR][TJR]
-	22354-42011		RIM,OUTSIDE	ﾘﾑ	2	A,B,H [TJR/EX]
6	514A3-82601		BOLT	ﾎﾞﾙﾄ	18	A,B,C,D,H,J [TR][TJR]
-	514A3-82601		BOLT	ﾎﾞﾙﾄ	18	A,B,H [TJR/EX]
7	02011-00016		WASHER	ﾜｯｼｬ	18	A,B,C,D,H,J [TR][TJR]
-	02011-00016		WASHER	ﾜｯｼｬ	18	A,B,H [TJR/EX]
8	01400-10016		NUT	ﾅｯﾄ	18	A,B,C,D,H,J [TR][TJR]
-	01400-10016		NUT	ﾅｯﾄ	18	A,B,H [TJR/EX]
A4	54356-80651		RIM-ASSY,5.00S-12TB	ﾘﾑｱｯｾﾝ	2	E,F,G,K,L [TR][TJR] INC.9-12
9	54356-82071		RIM & DISK	ﾘﾑ & ﾃﾞｨｽｸ	2	E,F,G,K,L [TR][TJR]
10	53656-82041		BAND	ﾊﾞﾝﾄﾞ	2	E,F,G,K,L [TR][TJR]
11	53656-82051		FLANGE,SIDE	ﾌﾗﾝｼﾞ	2	E,F,G,K,L [TR][TJR]

FIG.80 REAR WHEEL [TR][TJR]

(F4044490) リヤーホイール

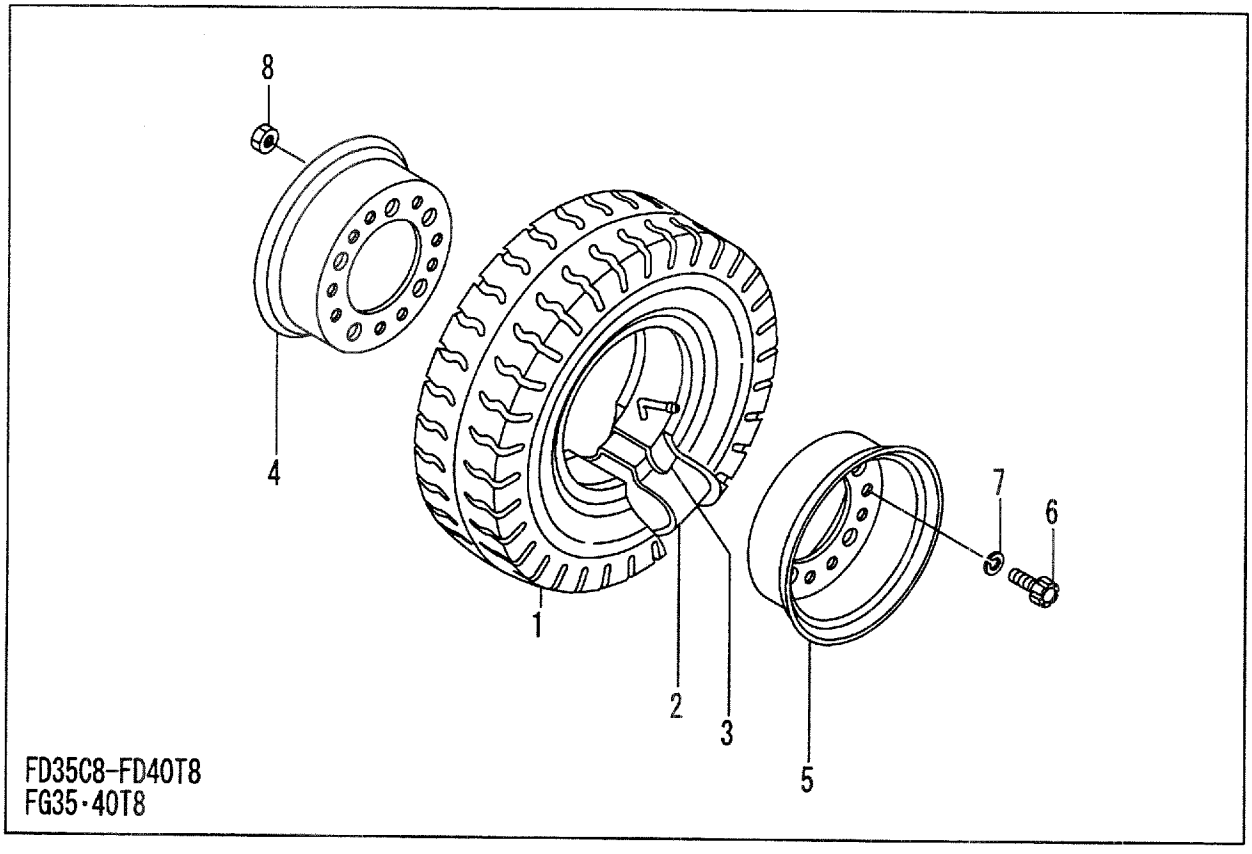

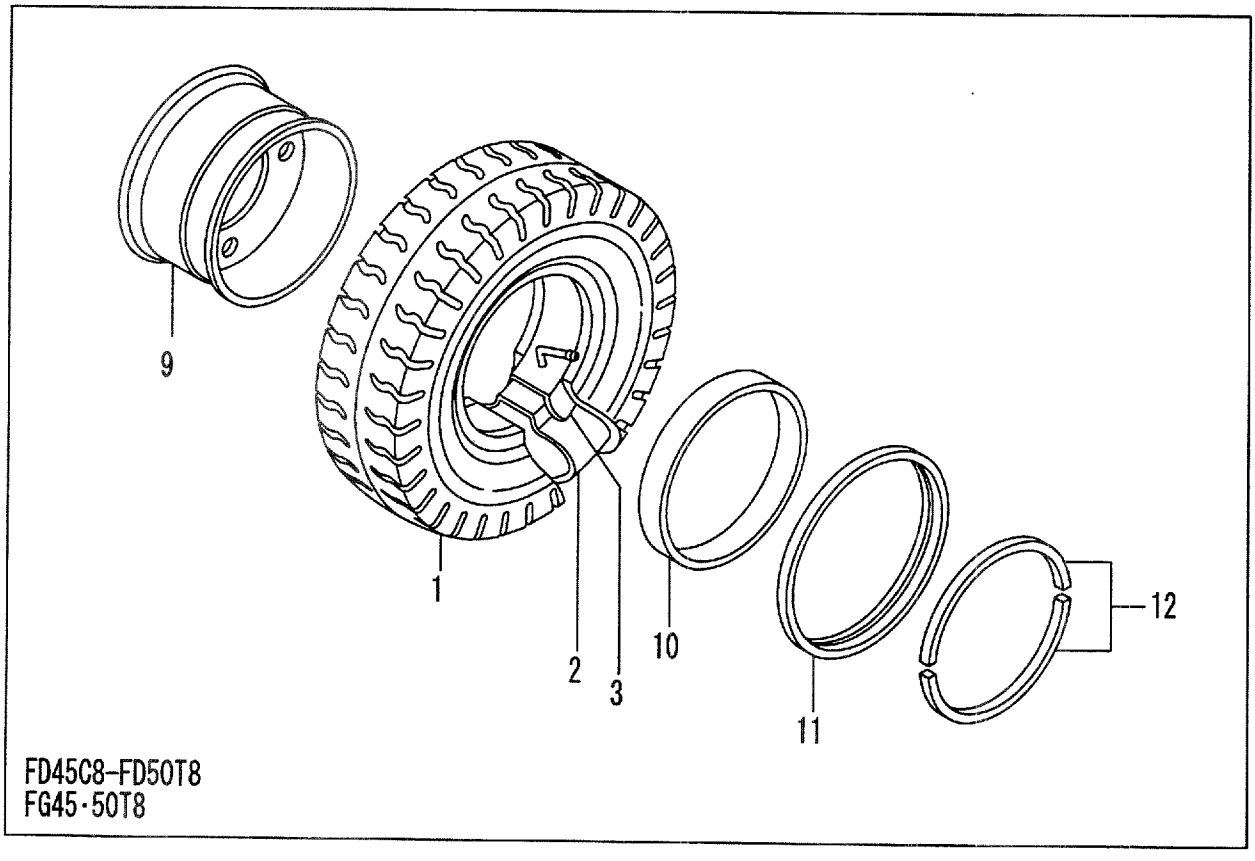

A:FD35C8 D:FD40T8 G:FD50T8 K:FG45T8
B:FD35T8 E:FD45C8 H:FG35T8 L:FG50T8
C:FD40C8 F:FD45T8 J:FG40T8

FIG.80
(F4044490)

Item No	Part No.	Mark	Description	Req'd	Remarks : Serial No.
12	53656-82061		RING,LOCK リング	2	E,F,G,K,L [TR][TJR]

FIG.81 REAR WHEEL [TUR][TUJR]

(F40444A0) リヤーホイール

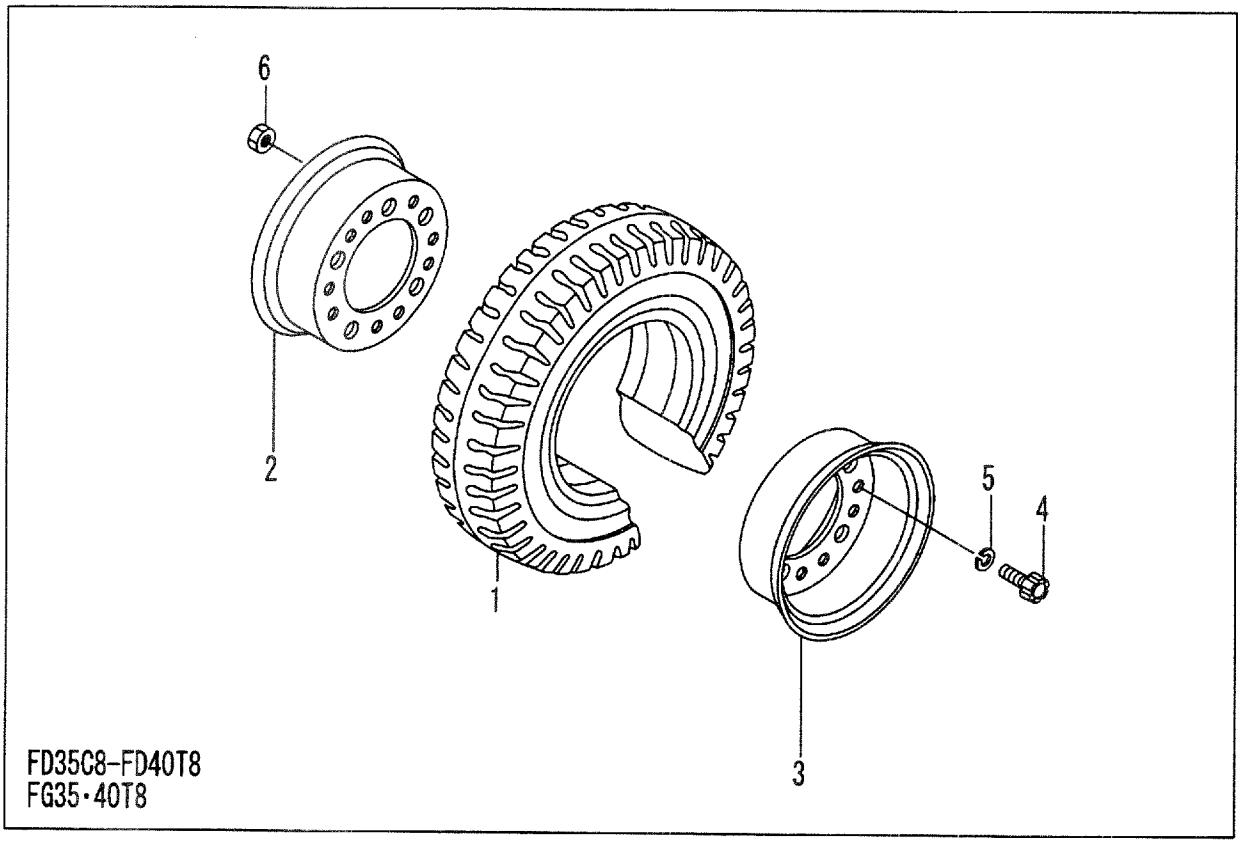

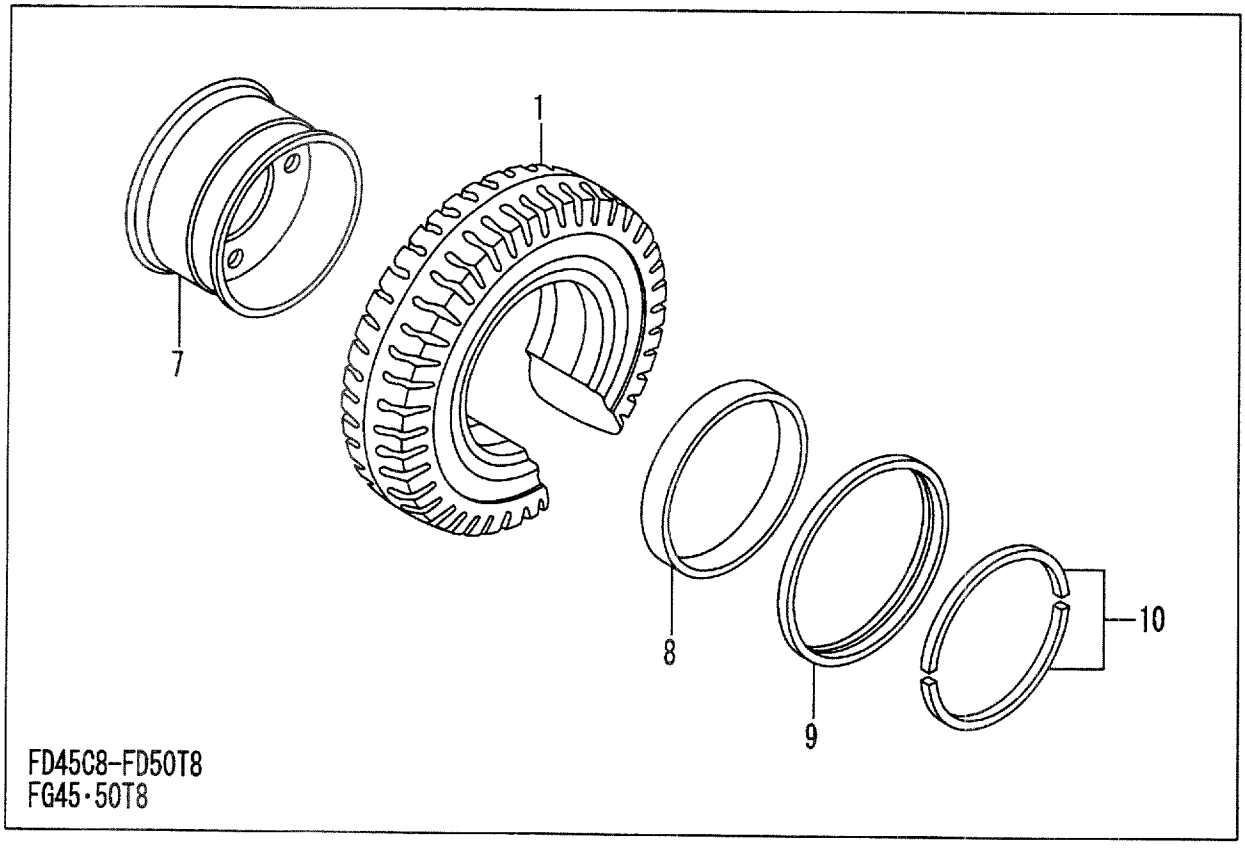

A:FD35C8 D:FD40T8 G:FD50T8 K:FG45T8
B:FD35T8 E:FD45C8 H:FG35T8 L:FG50T8
C:FD40C8 F:FD45T8 J:FG40T8

FIG.81
(F40444A0)

Item No	Part No.	Mark	Description		Req'd	Remarks : Serial No.
A1	54356-80401		WHEEL-ASSY,REAR	ﾘｱﾎｲｰﾙｱｯｾﾝ	2	A,B,C,D,H,J [TUR] INC.1-6
-	55953-80451		WHEEL-ASSY,REAR	ﾘｱﾎｲｰﾙｱｯｾﾝ	2	A,B,C,D,H,J [TUJR] INC.1-6
-	54606-80611		WHEEL-ASSY,REAR	ﾘｱﾎｲｰﾙｱｯｾﾝ	2	E,F,G,K,L [TUJR] INC.1,7-10
1	06801-70012		TIRE,7.00-12,U-LUG	ﾀｲﾔ	2	A,B,C,D,H,J [TUR](AIC)
-	06806-70012		TIRE,7.00-12,J-LUG	ﾀｲﾔ	2	A,B,C,D,H,J [TUJR](AIC)
-	06806-70012		TIRE,7.00-12,J-LUG	ﾀｲﾔ	2	E,F,G,K,L [TUJR](AIC)
A2	22314-40101		RIM-ASSY,5.00S-12	ﾘﾑｱｯｾﾝ	2	A,B,C,D,H,J [TUR][TUJR] INC.2-6
2	22354-42001		RIM,INSIDE	ﾘﾑ	2	A,B,C,D,H,J [TUR][TUJR]
3	22354-42011		RIM,OUTSIDE	ﾘﾑ	2	A,B,C,D,H,J [TUR][TUJR]
4	514A3-82601		BOLT	ﾎﾞﾙﾄ	18	A,B,C,D,H,J [TUR][TUJR]
5	02011-00016		WASHER	ﾜｯｼｬ	18	A,B,C,D,H,J [TUR][TUJR]
6	01400-10016		NUT	ﾅｯﾄ	18	A,B,C,D,H,J [TUR][TUJR]
A3	54356-80651		RIM-ASSY,5.00S-12TB	ﾘﾑｱｯｾﾝ	2	E,F,G,K,L [TUJR] INC.7-10
7	54356-82071		RIM & DISK	ﾘﾑ & ﾃﾞｨｽｸ	2	E,F,G,K,L [TUJR]
8	53656-82041		BAND	ﾊﾞﾝﾄﾞ	2	E,F,G,K,L [TUJR]
9	53656-82051		FLANGE,SIDE	ﾌﾗﾝｼﾞ	2	E,F,G,K,L [TUJR]
10	53656-82061		RING,LOCK	ﾘﾝｸﾞ	2	E,F,G,K,L [TUJR]

FIG.82 REAR WHEEL [TUSR][TUWR][TUGR]

(F40444B0) リヤーホイール

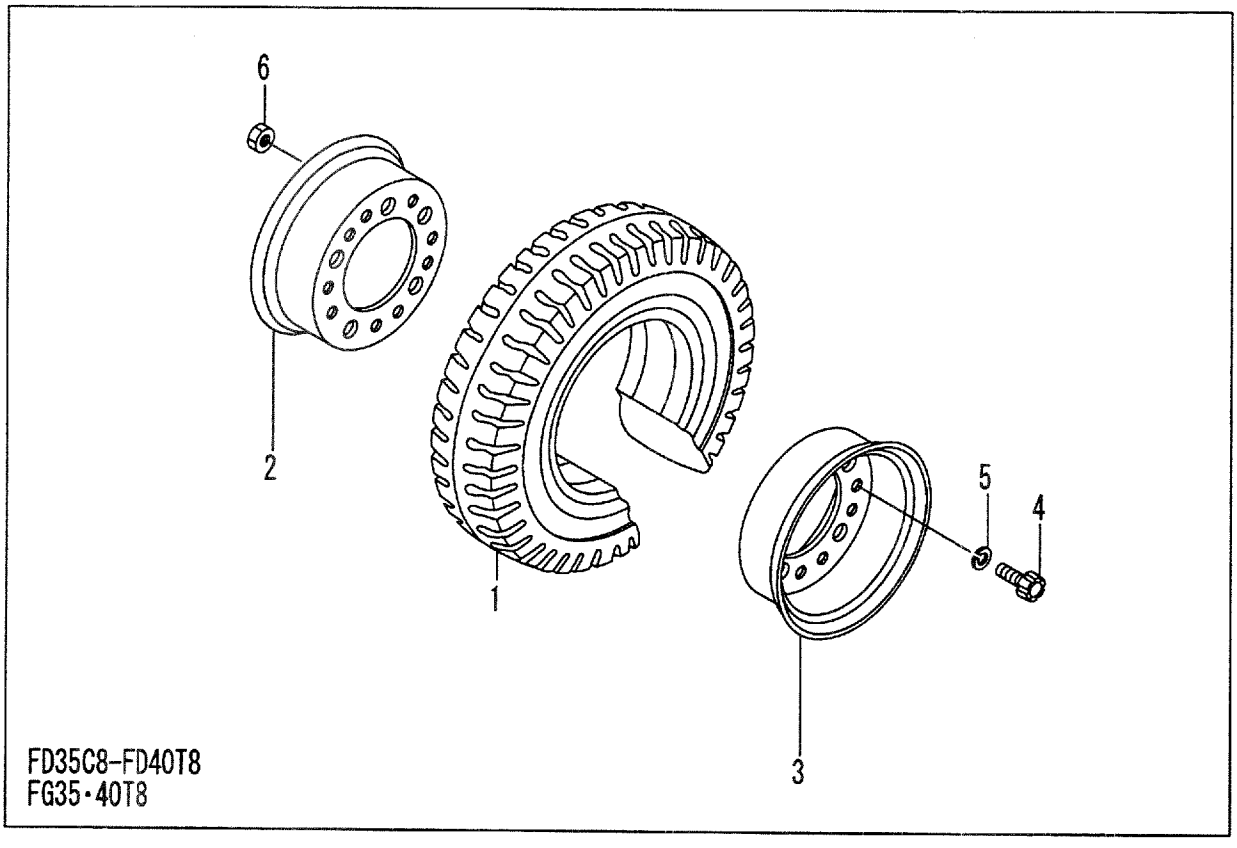

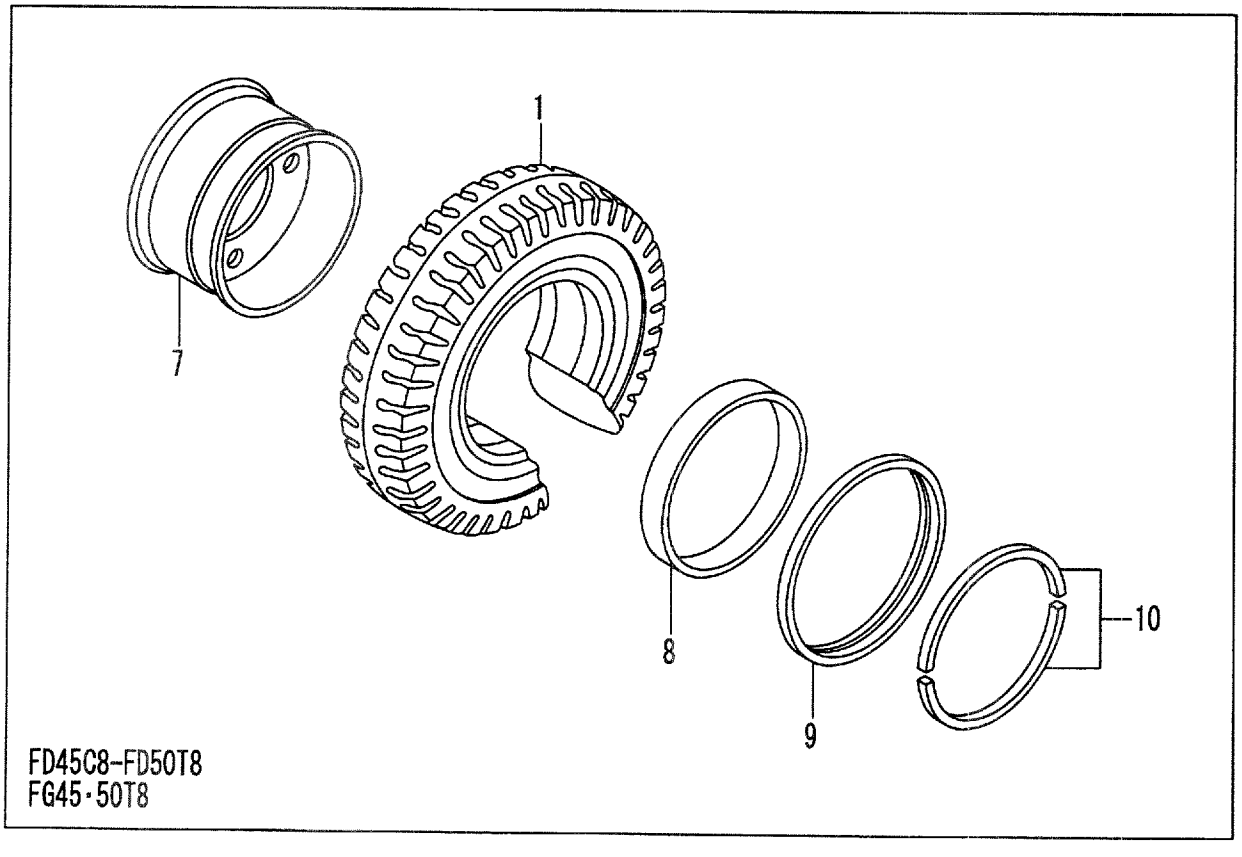

A:FD35C8 D:FD40T8 G:FD50T8 K:FG45T8
B:FD35T8 E:FD45C8 H:FG35T8 L:FG50T8
C:FD40C8 F:FD45T8 J:FG40T8

FIG.82
(F40444B0)

Item No	Part No.	Mark	Description		Req'd	Remarks : Serial No.
A1	55956-80421		WHEEL-ASSY,REAR	ﾘｱﾎｲｰﾙｱｯｾﾝ	2	A,B,C,D,H,J [TUSR] INC.1-6
-	528C6-80041		WHEEL-ASSY,REAR	ﾘｱﾎｲｰﾙｱｯｾﾝ	2	E,F,G,K,L [TUSR] INC.1,7-10
-	55956-80401		WHEEL-ASSY,REAR	ﾘｱﾎｲｰﾙｱｯｾﾝ	2	A,B,C,D,H,J [TUWR] INC.1-6
-	528C6-80021		WHEEL-ASSY,REAR	ﾘｱﾎｲｰﾙｱｯｾﾝ	2	E,F,G,K,L [TUWR] INC.1,7-10
-	55956-80411		WHEEL-ASSY,REAR	ﾘｱﾎｲｰﾙｱｯｾﾝ	2	A,B,C,D,H,J [TUGR] INC.1-6
-	528C6-80031		WHEEL-ASSY,REAR	ﾘｱﾎｲｰﾙｱｯｾﾝ	2	E,F,G,K,L [TUGR] INC.1,7-10
1	06851-70012		TIRE,SOFTONE,7.00-12	ﾀｲﾔ	2	A,B,C,D,H,J [TUSR](AIC)
-	06853-70012		TIRE,SOFTONE,7.00-12	ﾀｲﾔ	2	E,F,G,K,L [TUSR](AIC)
-	06841-70012		TIRE,COLOR-WHITE,7.00-12	ﾀｲﾔ	2	A,B,C,D,H,J [TUWR](AIC)
-	528C6-82021		TIRE,COLOR-WHITE,7.00-12	ﾀｲﾔ	2	E,F,G,K,L [TUWR](AIC)(OLD PART)
-	571F6-82181		TIRE,COLOR-WHITE,7.00-12	ﾀｲﾔ	2	E,F,G,K,L [TUWR](AIC)(NEW PART)
-	06843-70012		TIRE,COLOR-WHITE,7.00-12	ﾀｲﾔ	2	A,B,C,D,H,J [TUGR](AIC)
-	528C6-82031		TIRE,COLOR-WHITE,7.00-12	ﾀｲﾔ	2	E,F,G,K,L [TUGR](AIC)(OLD PART)
-	571F6-82191		TIRE,COLOR-WHITE,7.00-12	ﾀｲﾔ	2	E,F,G,K,L [TUGR](AIC)(NEW PART)
A2	22314-40101		RIM-ASSY,5.00S-12	ﾘﾑｱｯｾﾝ	2	A,B,C,D,H,J [TUSR][TUWR][TUGR] INC.2-6
2	22354-42001		RIM,INSIDE	ﾘﾑ	2	A,B,C,D,H,J [TUSR][TUWR][TUGR]
3	22354-42011		RIM,OUTSIDE	ﾘﾑ	2	A,B,C,D,H,J [TUSR][TUWR][TUGR]
4	514A3-82601		BOLT	ﾎﾞﾙﾄ	18	A,B,C,D,H,J [TUSR][TUWR][TUGR]
5	02011-00016		WASHER	ﾜｯｼｬ	18	A,B,C,D,H,J [TUSR][TUWR][TUGR]
6	01400-10016		NUT	ﾅｯﾄ	18	A,B,C,D,H,J [TUSR][TUWR][TUGR]
A3	54356-80651		RIM-ASSY,5.00S-12TB	ﾘﾑｱｯｾﾝ	2	E,F,G,K,L [TUSR][TUWR][TUGR] INC.7-10
7	54356-82071		RIM & DISK	ﾘﾑ & ﾃﾞｨｽｸ	2	E,F,G,K,L [TUSR][TUWR][TUGR]
8	53656-82041		BAND	ﾊﾞﾝﾄﾞ	2	E,F,G,K,L [TUSR][TUWR][TUGR]
9	53656-82051		FLANGE,SIDE	ﾌﾗﾝｼﾞ	2	E,F,G,K,L [TUSR][TUWR][TUGR]
10	53656-82061		RING,LOCK	ﾘﾝｸﾞ	2	E,F,G,K,L [TUSR][TUWR][TUGR]

FIG.82 REAR WHEEL [TUSR][TUWR][TUGR]

(F40444B0) リヤーホイール

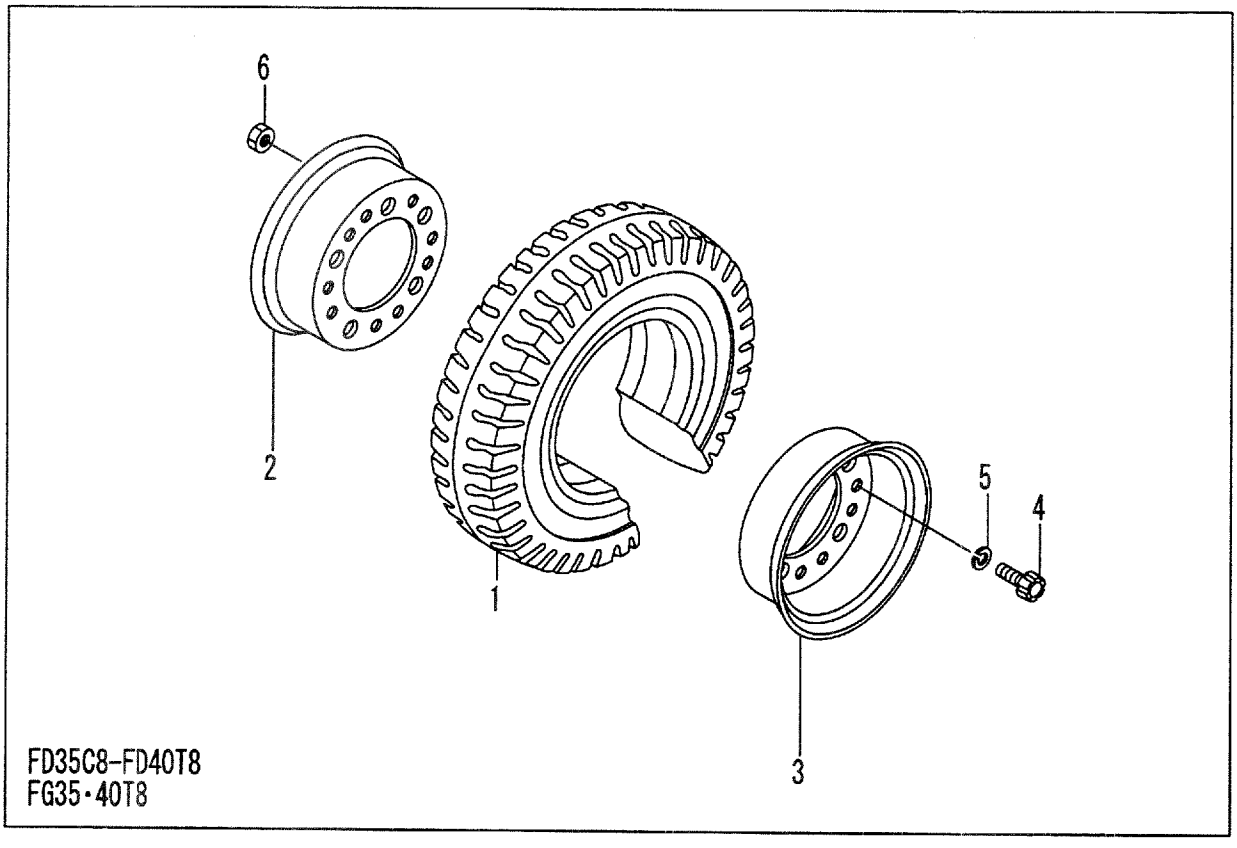

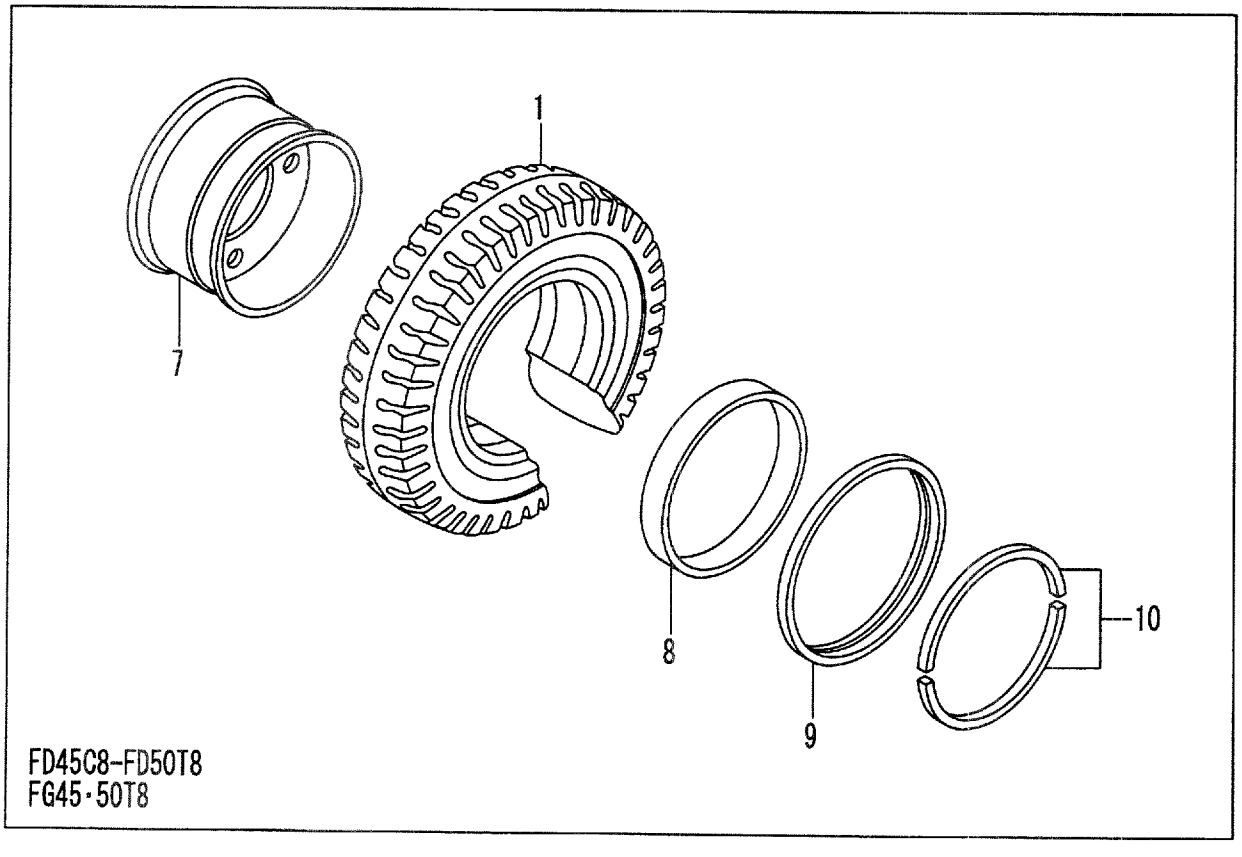

A:FD35C8 D:FD40T8 G:FD50T8 K:FG45T8
B:FD35T8 E:FD45C8 H:FG35T8 L:FG50T8
C:FD40C8 F:FD45T8 J:FG40T8

FIG.82
(F40444B0)

Item No	Part No.	Mark	Description	Req'd	Remarks : Serial No.
11	571A6-82081	+	BELT,EARTH ﾍﾞﾙﾄ	1	E,F,G,K,L [TUWR][TUGR]

POWER CYLINDER

FIG.83 [JPN][EXA/PSS,EXC/PSS,EXE/PSS,EXN/PSS]

(F4044510) ﾊﾟﾜｰｼﾘﾝﾀﾞ

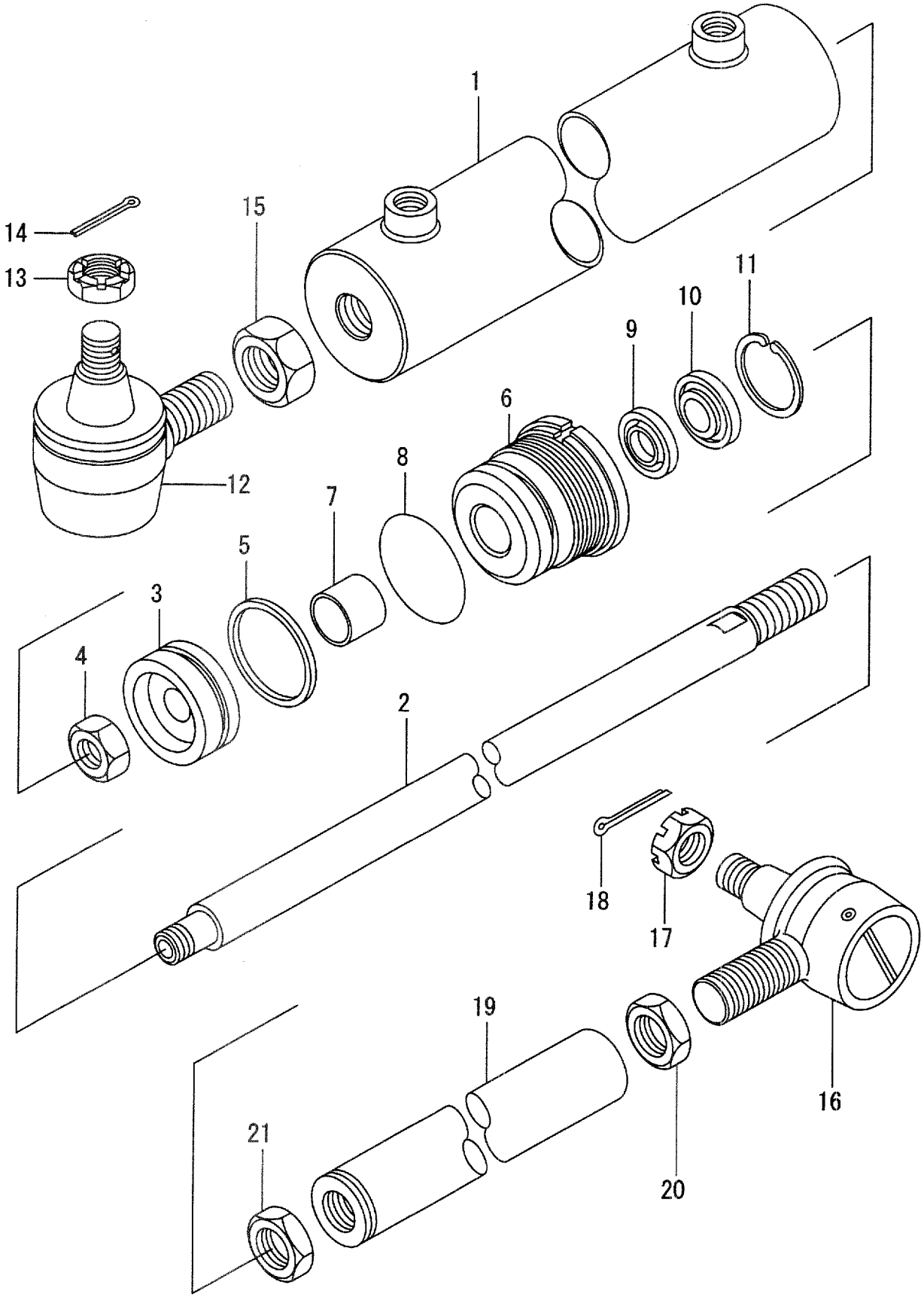

A:FD35C8 D:FD40T8 G:FD50T8 K:FG45T8
B:FD35T8 E:FD45C8 H:FG35T8 L:FG50T8
C:FD40C8 F:FD45T8 J:FG40T8

FIG.83
(F4044510)

Item No	Part No.	Mark	Description		Req'd	Remarks : Serial No.
A1	224W4-50112		CYL-ASSY,POWER	ﾊﾟﾜｰｼﾘﾝﾀﾞｱｯｾﾝ	1	INC.1-15
-	224W4-50112		CYL-ASSY,POWER	ﾊﾟﾜｰｼﾘﾝﾀﾞｱｯｾﾝ	1	[EXA/PSS][EXC/PSS] INC.1-15
-	224W4-50112		CYL-ASSY,POWER	ﾊﾟﾜｰｼﾘﾝﾀﾞｱｯｾﾝ	1	[EXE/PSS][EXN/PSS] INC.1-15
1	224W4-50121		TUBE	ﾁｭｰﾌﾞ	1	
-	224W4-50121		TUBE	ﾁｭｰﾌﾞ	1	[EXA/PSS][EXC/PSS] [EXE/PSS][EXN/PSS]
2	25954-52021		ROD	ﾛｯﾄﾞ	1	
-	25954-52021		ROD	ﾛｯﾄﾞ	1	[EXA/PSS][EXC/PSS] [EXE/PSS][EXN/PSS]
3	25954-52041		PISTON	ﾋﾟｽﾄﾝ	1	
-	25954-52041		PISTON	ﾋﾟｽﾄﾝ	1	[EXA/PSS][EXC/PSS] [EXE/PSS][EXN/PSS]
4	01402-10018		NUT	ﾅｯﾄ	1	
-	01402-10018		NUT	ﾅｯﾄ	1	[EXA/PSS][EXC/PSS] [EXE/PSS][EXN/PSS]
5	25954-50232	*	SEAL	ｼｰﾙ	1	
-	25954-50232	*	SEAL	ｼｰﾙ	1	[EXA/PSS][EXC/PSS] [EXE/PSS][EXN/PSS]
A2	224W4-50301		CAP-ASSY,CYL	ｷｬｯﾌﾟｱｯｾﾝ	1	INC.6,7
-	224W4-50301		CAP-ASSY,CYL	ｷｬｯﾌﾟｱｯｾﾝ	1	[EXA/PSS][EXC/PSS] INC.6,7
-	224W4-50301		CAP-ASSY,CYL	ｷｬｯﾌﾟｱｯｾﾝ	1	[EXE/PSS][EXN/PSS] INC.6,7
6	NO PART NO.	#	CAP	ｷｬｯﾌﾟ	1	
-	NO PART NO.	#	CAP	ｷｬｯﾌﾟ	1	[EXA/PSS][EXC/PSS] [EXE/PSS][EXN/PSS]
7	25954-52061		BUSHING	ﾌﾞｯｼﾝｸﾞ	1	
-	25954-52061		BUSHING	ﾌﾞｯｼﾝｸﾞ	1	[EXA/PSS][EXC/PSS] [EXE/PSS][EXN/PSS]
8	03350-00550	*	O-RING	Oﾘﾝｸﾞ	1	
-	03350-00550	*	O-RING	Oﾘﾝｸﾞ	1	[EXA/PSS][EXC/PSS] [EXE/PSS][EXN/PSS]
9	25954-52071	*	U-PACKING	Uﾊﾟｯｷﾝｸﾞ	1	
-	25954-52071	*	U-PACKING	Uﾊﾟｯｷﾝｸﾞ	1	[EXA/PSS][EXC/PSS] [EXE/PSS][EXN/PSS]
10	25954-52081	*	SEAL,DUST	ｼｰﾙ	1	
-	25954-52081	*	SEAL,DUST	ｼｰﾙ	1	[EXA/PSS][EXC/PSS] [EXE/PSS][EXN/PSS]
11	25954-52091	*	RING,SNAP	ｽﾅｯﾌﾟﾘﾝｸﾞ	1	
-	25954-52091	*	RING,SNAP	ｽﾅｯﾌﾟﾘﾝｸﾞ	1	[EXA/PSS][EXC/PSS] [EXE/PSS][EXN/PSS]
A3	25954-50242		JOINT-ASSY,BALL	ｼﾞｮｲﾝﾄｱｯｾﾝ	1	INC.12-14
-	25954-50242		JOINT-ASSY,BALL	ｼﾞｮｲﾝﾄｱｯｾﾝ	1	[EXA/PSS][EXC/PSS] INC.12-14
-	25954-50242		JOINT-ASSY,BALL	ｼﾞｮｲﾝﾄｱｯｾﾝ	1	[EXE/PSS][EXN/PSS] INC.12-14
12	NO PART NO.	#	BODY	ﾎﾞﾃﾞｨ	1	
-	NO PART NO.	#	BODY	ﾎﾞﾃﾞｨ	1	[EXA/PSS][EXC/PSS] [EXE/PSS][EXN/PSS]
13	01412-10030		NUT	ﾅｯﾄ	1	
-	01412-10030		NUT	ﾅｯﾄ	1	[EXA/PSS][EXC/PSS] [EXE/PSS][EXN/PSS]

POWER CYLINDER

FIG.83 [JPN][EXA/PSS,EXC/PSS,EXE/PSS,EXN/PSS]

(F4044510) ﾊﾟﾜｰｼﾘﾝﾀﾞ

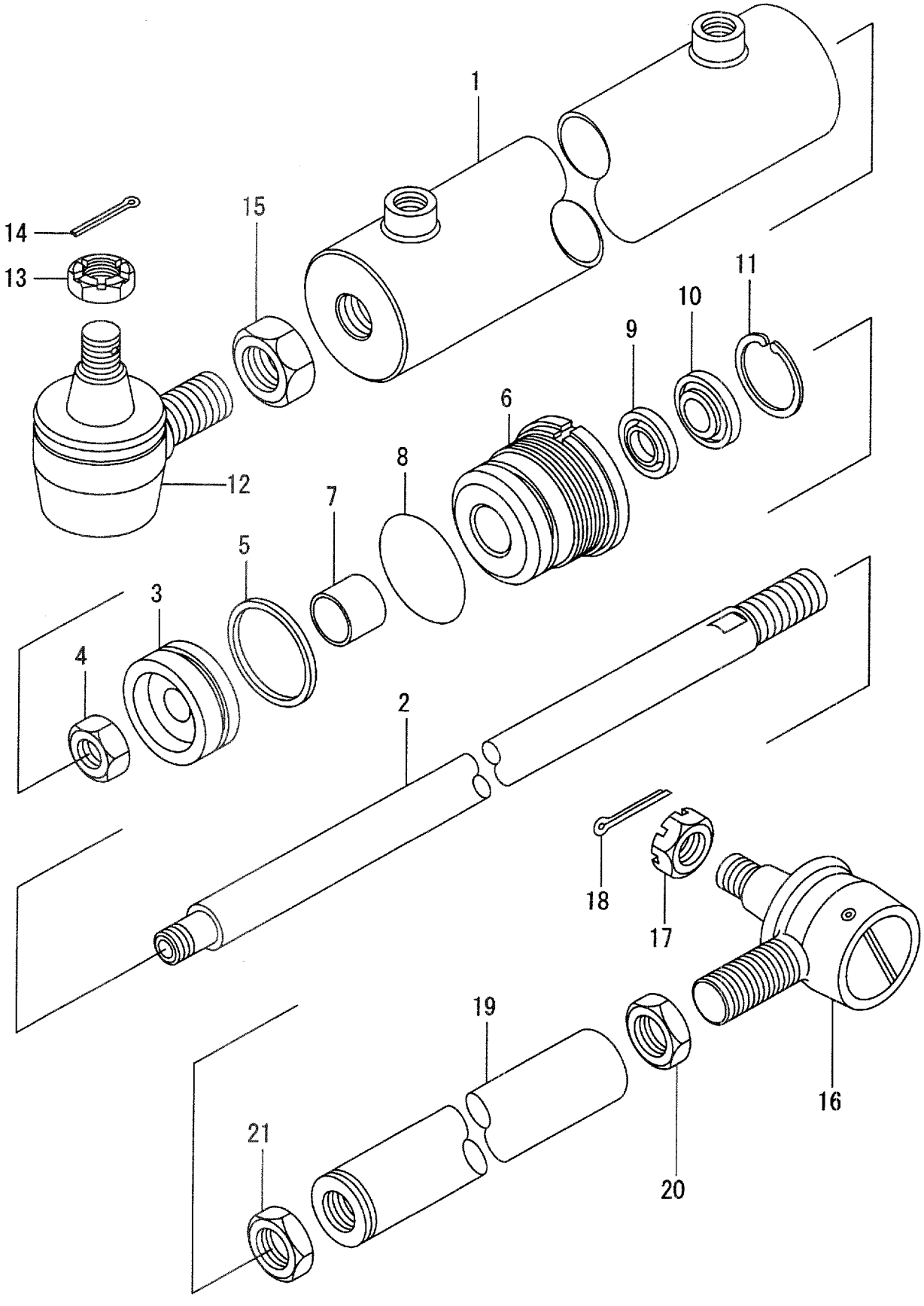

A:FD35C8 D:FD40T8 G:FD50T8 K:FG45T8
B:FD35T8 E:FD45C8 H:FG35T8 L:FG50T8
C:FD40C8 F:FD45T8 J:FG40T8

FIG.83
(F4044510)

Item No	Part No.	Mark	Description		Req'd	Remarks : Serial No.
14	02200-06055		PIN,COTTER	ﾋﾟﾝ	1	
-	02200-06055		PIN,COTTER	ﾋﾟﾝ	1	[EXA/PSS][EXC/PSS] [EXE/PSS][EXN/PSS]
15	25784-52261		NUT	ﾅｯﾄ	1	
-	25784-52261		NUT	ﾅｯﾄ	1	[EXA/PSS][EXC/PSS] [EXE/PSS][EXN/PSS]
A4	25904-50211		JOINT-ASSY,BALL	ｼﾞｮｲﾝﾄｱｯｾﾝ	1	INC.16-18
-	25904-50211		JOINT-ASSY,BALL	ｼﾞｮｲﾝﾄｱｯｾﾝ	1	[EXA/PSS][EXC/PSS] INC.16-18
-	25904-50211		JOINT-ASSY,BALL	ｼﾞｮｲﾝﾄｱｯｾﾝ	1	[EXE/PSS][EXN/PSS] INC.16-18
16	NO PART NO.	#	BODY	ﾎﾞﾃﾞｨ	1	
-	NO PART NO.	#	BODY	ﾎﾞﾃﾞｨ	1	[EXA/PSS][EXC/PSS] [EXE/PSS][EXN/PSS]
17	01412-10030		NUT	ﾅｯﾄ	1	
-	01412-10030		NUT	ﾅｯﾄ	1	[EXA/PSS][EXC/PSS] [EXE/PSS][EXN/PSS]
18	02200-06055		PIN,COTTER	ﾋﾟﾝ	1	
-	02200-06055		PIN,COTTER	ﾋﾟﾝ	1	[EXA/PSS][EXC/PSS] [EXE/PSS][EXN/PSS]
19	224W4-52001		ROD	ﾛｯﾄﾞ	1	
-	224W4-52001		ROD	ﾛｯﾄﾞ	1	[EXA/PSS][EXC/PSS] [EXE/PSS][EXN/PSS]
20	25784-52261		NUT	ﾅｯﾄ	1	
-	25784-52261		NUT	ﾅｯﾄ	1	[EXA/PSS][EXC/PSS] [EXE/PSS][EXN/PSS]
21	01400-10024		NUT	ﾅｯﾄ	1	
-	01400-10024		NUT	ﾅｯﾄ	1	[EXA/PSS][EXC/PSS] [EXE/PSS][EXN/PSS]
K1	25954-59802		KIT,OVERHAUL	ｵｰﾊﾞｰﾎｰﾙｷｯﾄ	1	INC.5,8-11
-	25954-59802		KIT,OVERHAUL	ｵｰﾊﾞｰﾎｰﾙｷｯﾄ	1	[EXA/PSS][EXC/PSS] INC.5,8-11
-	25954-59802		KIT,OVERHAUL	ｵｰﾊﾞｰﾎｰﾙｷｯﾄ	1	[EXE/PSS][EXN/PSS] INC.5,8-11

FIG.84 POWER CYLINDER [OBT]

(F4044520) ﾊﾟﾜｰｼﾘﾝﾀﾞ

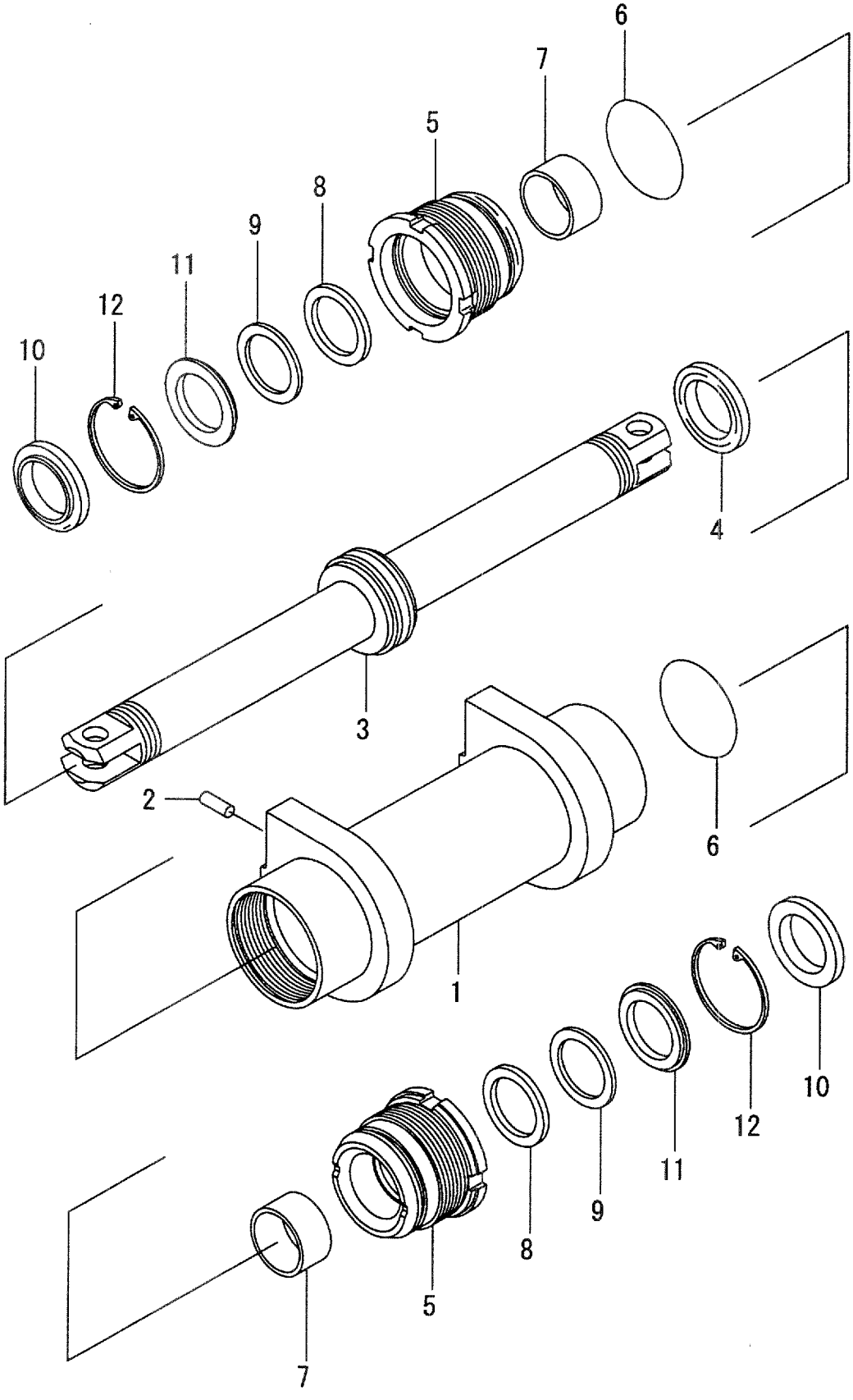

A:FD35C8 D:FD40T8 G:FD50T8 K:FG45T8
B:FD35T8 E:FD45C8 H:FG35T8 L:FG50T8
C:FD40C8 F:FD45T8 J:FG40T8

FIG.84
(F4044520)

Item No	Part No.	Mark	Description		Req'd	Remarks : Serial No.
A1	524W2-40202		CYL-ASSY,POWER	ﾊﾟﾜｰｼﾘﾝﾀﾞｱｯｾﾝ	1	[OBT] INC.1-12
1	54602-42102		TUBE	ﾁｭｰﾌﾞ	1	[OBT]
2	02212-13025		PIN	ﾋﾟﾝ	2	[OBT]
A2	524W2-40401		ROD-ASSY,PISTON	ﾋﾟｽﾄﾝﾛｯﾄﾞｱｯｾﾝ	1	[OBT] INC.3,4
3	524W2-42351		ROD,PISTON	ﾛｯﾄﾞ	1	[OBT]
4	524W2-42261	*	SEAL	ｼｰﾙ	1	[OBT]
5	54602-42142		CAP	ｷｬｯﾌﾟ	2	[OBT]
6	03350-00850	*	O-RING	Oﾘﾝｸﾞ	2	[OBT]
7	25788-42221		BUSHING	ﾌﾞｯｼﾝｸﾞ	2	[OBT]
8	25278-42001	*	U-PACKING	Uﾊﾟｯｷﾝｸﾞ	1	[OBT]
9	63713-42341	*	RING,BACK-UP	ﾘﾝｸﾞ	2	[OBT]
10	24318-42011	*	SEAL,DUST	ｼｰﾙ	2	[OBT]
11	54602-42161		SPACER	ｽﾍﾟｰｻ	2	[OBT]
12	02110-00082		RING,SNAP	ｽﾅｯﾌﾟﾘﾝｸﾞ	2	[OBT]
13	04134-00202	+	NIPPLE	ﾆｯﾌﾟﾙ	2	[OBT]
14	03320-00110	+	O-RING	Oﾘﾝｸﾞ	2	[OBT]
K1	524W2-40211		KIT,REPAIR	ﾘﾍﾟｱｷｯﾄ	1	[OBT] INC.4,6,8-10

FIG.85 OVERHEAD GUARD

(F4045110) オーバヘッドガード

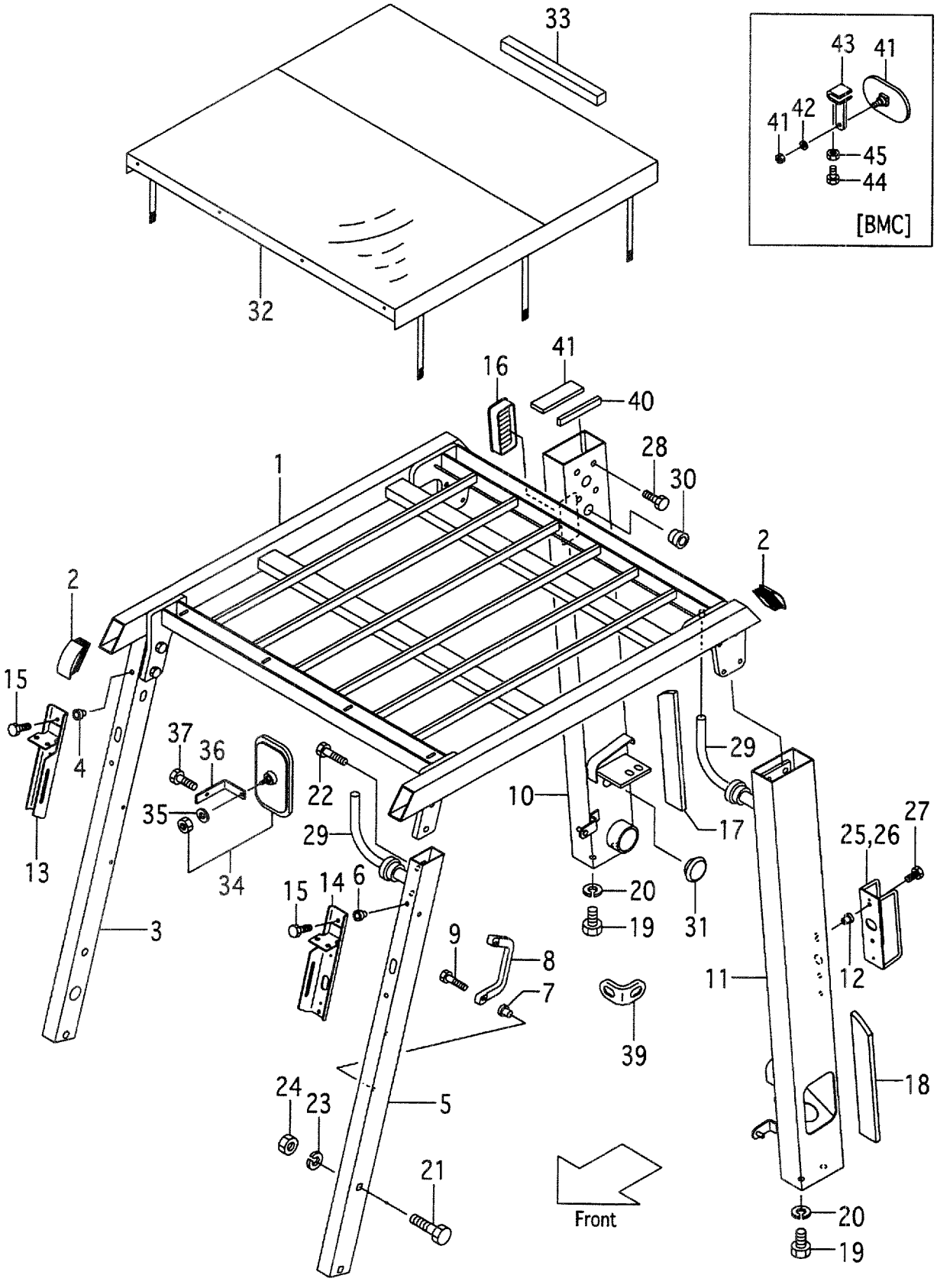

A:FD35C8 D:FD40T8 G:FD50T8 K:FG45T8
B:FD35T8 E:FD45C8 H:FG35T8 L:FG50T8
C:FD40C8 F:FD45T8 J:FG40T8

FIG.85
(F4045110)

Item No	Part No.	Mark	Description		Req'd	Remarks : Serial No.
1	235C5-10101		GUARD,OVERHEAD	ｶﾞｰﾄﾞ	1	
-	535C5-00101		GUARD,OVERHEAD	ｶﾞｰﾄﾞ	1	[HGH][EXN]
-	535C4-90101		GUARD,OVERHEAD	ｶﾞｰﾄﾞ	1	[HGL]
-	535C9-90111		GUARD,OVERHEAD	ｶﾞｰﾄﾞ	1	[RRE/HC]
-	535C9-90111		GUARD,OVERHEAD	ｶﾞｰﾄﾞ	1	H,J,K,L [RRE/LPG][RRE/LPO]
-	535C9-90111		GUARD,OVERHEAD	ｶﾞｰﾄﾞ	1	C,D,E,F,G [RRE/RW]
-	535C9-90111		GUARD,OVERHEAD	ｶﾞｰﾄﾞ	1	J,K,L [RRE/RW]
-	535C9-90111		GUARD,OVERHEAD	ｶﾞｰﾄﾞ	1	A,B,C,D,E,F,G [RRE/CRH]
-	535C9-90111		GUARD,OVERHEAD	ｶﾞｰﾄﾞ	1	A,C,E [RRE/CRO]
-	535C9-90111		GUARD,OVERHEAD	ｶﾞｰﾄﾞ	1	B,D,F,G [RRE/CRC]
2	230C5-12101		CAP	ｷｬｯﾌﾟ	4	
A1	235C5-10131		PIPE-ASSY,FRONT,RH	ﾌﾛﾝﾄﾊﾟｲﾌﾟｱｯｾﾝ	1	INC.3,4
-	535C5-00421		PIPE-ASSY,FRONT,RH	ﾌﾛﾝﾄﾊﾟｲﾌﾟｱｯｾﾝ	1	[HGH][EXN] INC.3,4
-	535C4-90421		PIPE-ASSY,FRONT,RH	ﾌﾛﾝﾄﾊﾟｲﾌﾟｱｯｾﾝ	1	[HGL] INC.3,4
-	535C5-50131		PIPE-ASSY,FRONT,RH	ﾌﾛﾝﾄﾊﾟｲﾌﾟｱｯｾﾝ	1	[HGE][EXE] INC.3,4
3	NO PART NO.	#	PIPE,RH,FRONT	ﾊﾟｲﾌﾟ	1	
4	514A5-12011		RIVET	ﾘﾍﾞｯﾄ	3	
A2	235C5-10141		PIPE-ASSY,FRONT,LH	ﾌﾛﾝﾄﾊﾟｲﾌﾟｱｯｾﾝ	1	INC.5-7
-	535C5-00431		PIPE-ASSY,FRONT,LH	ﾌﾛﾝﾄﾊﾟｲﾌﾟｱｯｾﾝ	1	[HGH][EXN] INC.5-7
-	535C4-90431		PIPE-ASSY,FRONT,LH	ﾌﾛﾝﾄﾊﾟｲﾌﾟｱｯｾﾝ	1	[HGL] INC.5-7
-	535C5-50141		PIPE-ASSY,FRONT,LH	ﾌﾛﾝﾄﾊﾟｲﾌﾟｱｯｾﾝ	1	[HGE][EXE] INC.5-7
5	NO PART NO.	#	PIPE,LH,FRONT	ﾊﾟｲﾌﾟ	1	
6	514A5-12011		RIVET	ﾘﾍﾞｯﾄ	3	
7	516G5-13151		RIVET	ﾘﾍﾞｯﾄ	2	
8	516G5-13051		GRIP	ｸﾞﾘｯﾌﾟ	1	
9	01171-06025		BOLT	ﾎﾞﾙﾄ	2	
A3	235C5-10161		PIPE-ASSY,REAR,RH	ﾘﾔｰﾊﾟｲﾌﾟｱｯｾﾝ	1	INC.10,12
-	535C5-00311		PIPE-ASSY,REAR,RH	ﾘﾔｰﾊﾟｲﾌﾟｱｯｾﾝ	1	[HGH][EXN] INC.10,12
-	535C4-90311		PIPE-ASSY,REAR,RH	ﾘﾔｰﾊﾟｲﾌﾟｱｯｾﾝ	1	[HGL] INC.10,12
-	535C0-92101		PIPE-ASSY,REAR,RH	ﾘﾔｰﾊﾟｲﾌﾟｱｯｾﾝ	1	[CAKB] INC.10,12
-	535C9-60001		PIPE-ASSY,REAR,RH	ﾘﾔｰﾊﾟｲﾌﾟｱｯｾﾝ	1	[CAKB/FE] INC.10,12
-	535C5-50311		PIPE-ASSY,REAR,RH	ﾘﾔｰﾊﾟｲﾌﾟｱｯｾﾝ	1	[HGE][EXE] INC.10,12
-	535C0-92301		PIPE-ASSY,REAR,RH	ﾘﾔｰﾊﾟｲﾌﾟｱｯｾﾝ	1	[CAKB/HGE][EXE] INC.10,12
-	535C0-92401		PIPE-ASSY,REAR,RH	ﾘﾔｰﾊﾟｲﾌﾟｱｯｾﾝ	1	[CAKB/HGH][EXN] INC.10,12
-	535C0-92501		PIPE-ASSY,REAR,RH	ﾘﾔｰﾊﾟｲﾌﾟｱｯｾﾝ	1	[CAKB/HGL] INC.10,12
-	235C5-10161		PIPE-ASSY,REAR,RH	ﾘﾔｰﾊﾟｲﾌﾟｱｯｾﾝ	1	B,D,F,G,H,J,K,L [EXA] INC.10,12
10	NO PART NO.	#	PIPE,RH,REAR	ﾊﾟｲﾌﾟ	1	
A4	235C5-10171		PIPE-ASSY,REAR,LH	ﾘﾔｰﾊﾟｲﾌﾟｱｯｾﾝ	1	INC.11,12
-	535C5-00211		PIPE-ASSY,REAR,LH	ﾘﾔｰﾊﾟｲﾌﾟｱｯｾﾝ	1	[HGH][EXN] INC.11,12
-	535C4-90211		PIPE-ASSY,REAR,LH	ﾘﾔｰﾊﾟｲﾌﾟｱｯｾﾝ	1	[HGL] INC.11,12
-	235C5-10171		PIPE-ASSY,REAR,LH	ﾘﾔｰﾊﾟｲﾌﾟｱｯｾﾝ	1	[CAKB][CAKB/HGH][CAKB/HGL] INC.11,12

FIG.85 OVERHEAD GUARD

(F4045110) オーバヘッドガード

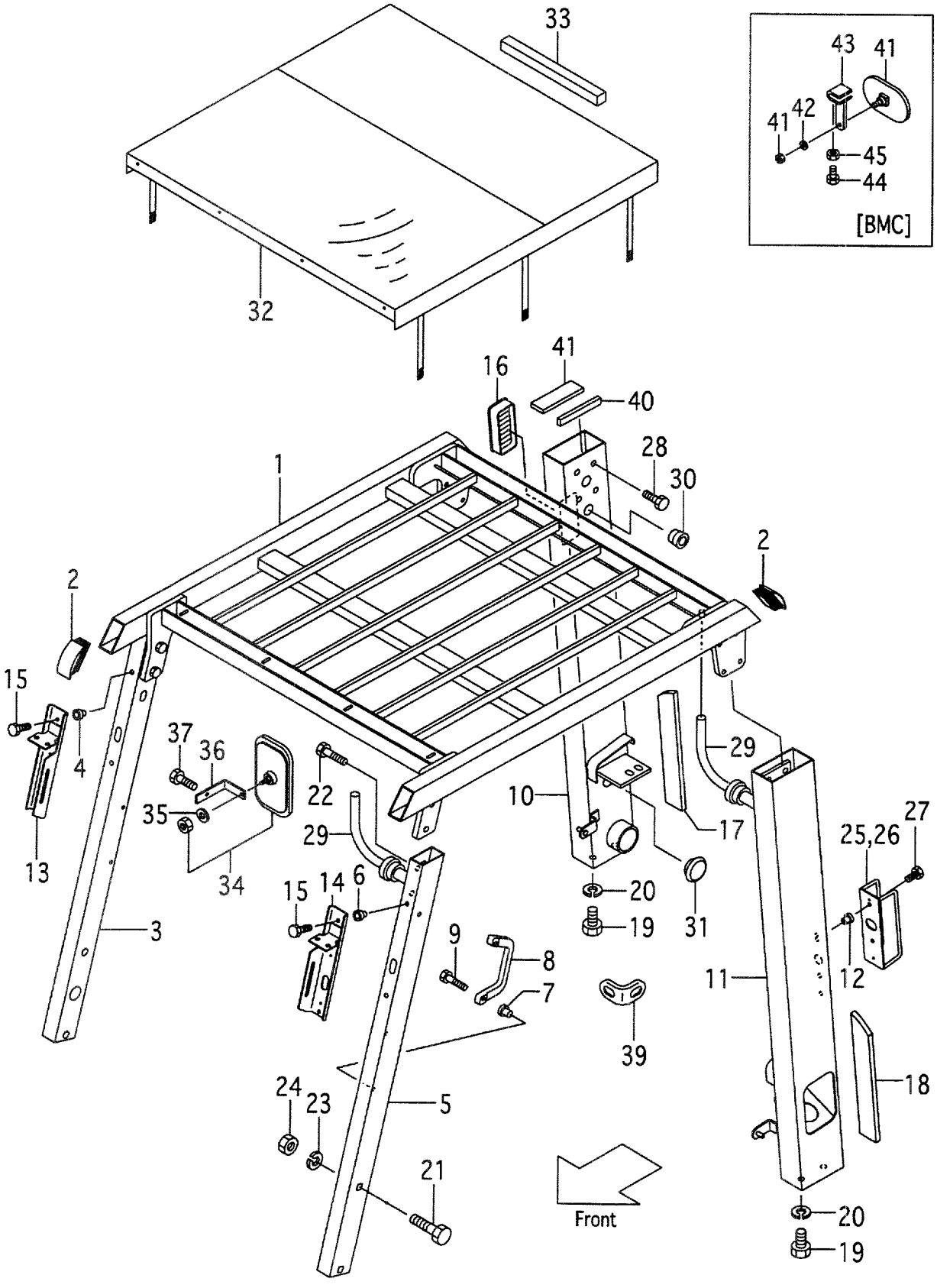

FIG.85
(F4045110)

Item No	Part No.	Mark	Description		Req'd	Remarks : Serial No.
-	235C5-10171		PIPE-ASSY,REAR,LH	ﾘﾔｰﾊﾟｲﾌﾟｱｯｾﾝ	1	[CAKB/FE][CAKB/HGE][EXE] [EXN] INC.11,12
-	535C5-50361		PIPE-ASSY,REAR,LH	ﾘﾔｰﾊﾟｲﾌﾟｱｯｾﾝ	1	[HGE][EXE] INC.11,12
-	535E2-70171		PIPE-ASSY,REAR,LH	ﾘﾔｰﾊﾟｲﾌﾟｱｯｾﾝ	1	B,D,F,G,H,J,K,L [EXA] INC.11,12
11	NO PART NO.	#	PIPE,LH,REAR	ﾊﾟｲﾌﾟ	1	
12	514A5-12011		RIVET	ﾘﾍﾞｯﾄ	4	
13	516G5-10901		BRACKET,RH	ﾌﾞﾗｹｯﾄ	1	
-	534A5-15001		BRACKET,RH	ﾌﾞﾗｹｯﾄ	1	A,B,C,D,E:1-1818 H,J:1-306 [HLG]
-	534A5-15002		BRACKET,RH	ﾌﾞﾗｹｯﾄ	1	A,B,C,D,E:1819- H,J:307- [HLG]
-	535C9-12001		BRACKET,RH	ﾌﾞﾗｹｯﾄ	1	F,G,K,L [HLG]
14	516G5-11001		BRACKET,LH	ﾌﾞﾗｹｯﾄ	1	
-	534A5-15041		BRACKET,LH	ﾌﾞﾗｹｯﾄ	1	A,B,C,D,E:1-1818 H,J:1-306 [HLG]
-	534A5-15042		BRACKET,LH	ﾌﾞﾗｹｯﾄ	1	A,B,C,D,E:1819- H,J:307- [HLG]
-	535C9-12011		BRACKET,LH	ﾌﾞﾗｹｯﾄ	1	F,G,K,L [HLG]
15	01183-08025		BOLT	ﾎﾞﾙﾄ	4	
-	01183-08025		BOLT	ﾎﾞﾙﾄ	4	A,B,C,D,E,H,J [HLG]
-	01183-08040		BOLT	ﾎﾞﾙﾄ	4	F,G,K,L [HLG]
16	230C1-02041		COVER,AIR-INTAKE	ｶﾊﾞｰ	1	
17	235C5-12151		RUBBER,RH	ﾗﾊﾞｰ	1	
18	235C5-12161		RUBBER,LH	ﾗﾊﾞｰ	1	
19	01103-16030		BOLT	ﾎﾞﾙﾄ	4	
20	02011-00016		WASHER	ﾜｯｼｬ	4	
21	55785-12201		BOLT	ﾎﾞﾙﾄ	4	A,B,C,D,E,F:1-188 G:1-106 H,J,K,L:1-102
-	01100-16080		BOLT	ﾎﾞﾙﾄ	4	A,B,C,D,E,F:189- G:107- H,J,K,L:103-
22	01186-12035		BOLT	ﾎﾞﾙﾄ	4	
23	02010-00016		WASHER	ﾜｯｼｬ	4	
24	01400-00016		NUT	ﾅｯﾄ	4	
25	516G5-10701		GUARD,RH	ｶﾞｰﾄﾞ	1	
-	524W1-92411		BRACKET,LAMP,RH	ﾌﾞﾗｹｯﾄ	1	C,D,E,F,G,J,K,L [RW]
-	524W1-92171		BRACKET,LAMP,RH	ﾌﾞﾗｹｯﾄ	1	C,D,E,F,G,J,K,L [RW/DD][RW/SDD][RW/TUE]
-	514E0-92081		BRACKET,LAMP,RH	ﾌﾞﾗｹｯﾄ	1	[CAKB]

FIG.85 OVERHEAD GUARD

(F4045110) オーバヘッドガード

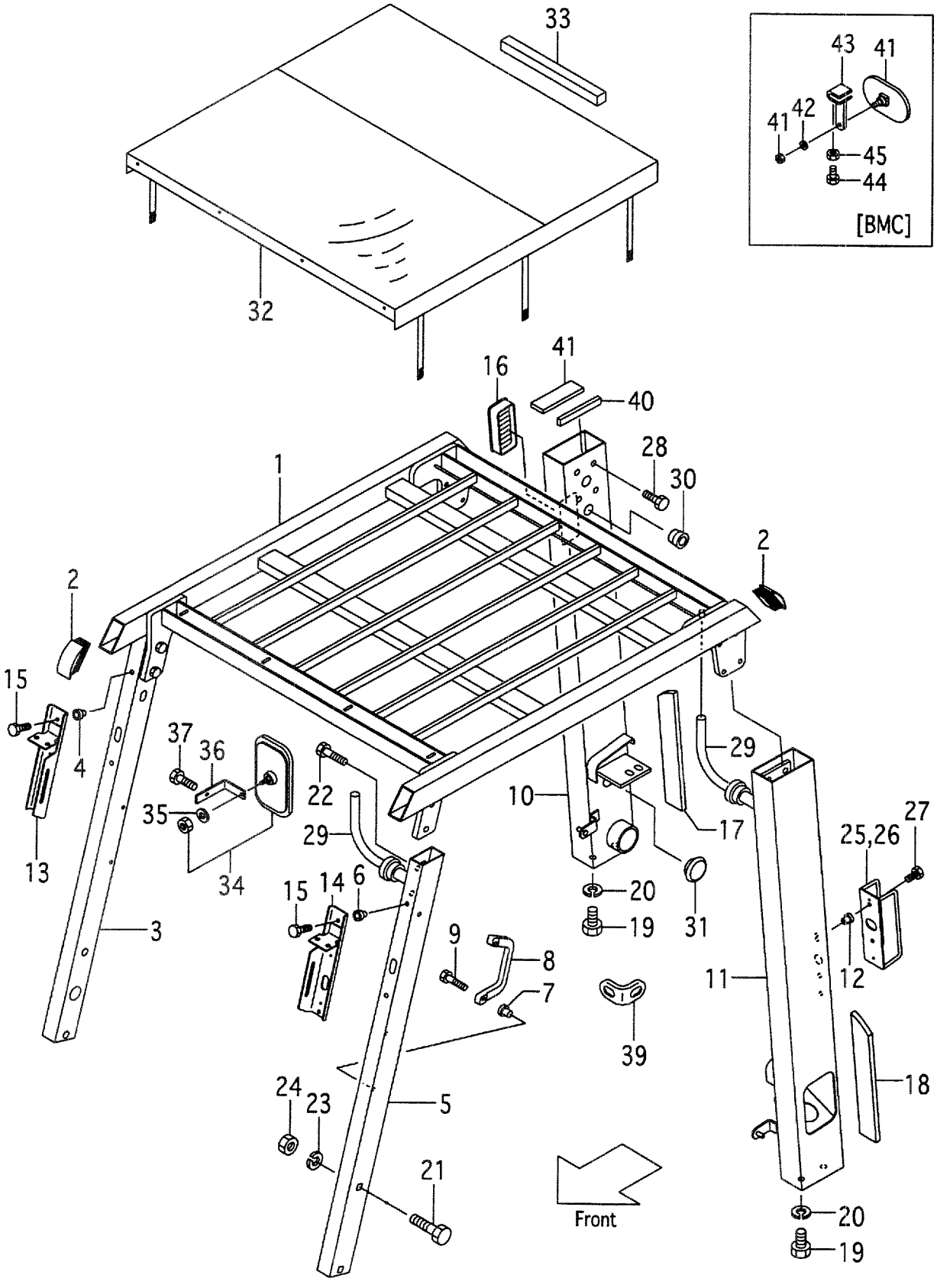

A:FD35C8 D:FD40T8 G:FD50T8 K:FG45T8
B:FD35T8 E:FD45C8 H:FG35T8 L:FG50T8
C:FD40C8 F:FD45T8 J:FG40T8

FIG.85
(F4045110)

Item No	Part No.	Mark	Description		Req'd	Remarks : Serial No.
26	516G5-10701		GUARD,LH	ｶﾞｰﾄﾞ	1	
-	524W1-92421		BRACKET,LAMP,LH	ﾌﾞﾗｹｯﾄ	1	C,D,E,F,G,J,K,L [RW]
-	524W1-92181		BRACKET,LAMP,LH	ﾌﾞﾗｹｯﾄ	1	C,D,E,F,G,J,K,L [RW/DD][RW/SDD][RW/TUE]
-	514E0-92091		BRACKET,LAMP,LH	ﾌﾞﾗｹｯﾄ	1	[CAKB]
27	01183-08016		BOLT	ﾎﾞﾙﾄ	4	
-	01183-08025		BOLT	ﾎﾞﾙﾄ	4	C,D,E,F,G,J,K,L [RW][RW/DD][RW/SDD] [RW/TUE]
-	01183-08035		BOLT	ﾎﾞﾙﾄ	4	[CAKB]
28	01186-12035		BOLT	ﾎﾞﾙﾄ	8	
29	514A5-12101		HOSE	ﾎｰｽ	2	
-	514A5-13471		HOSE	ﾎｰｽ	2	[HGH][EXN]
30	514A5-12701		PLUG	ﾌﾟﾗｸﾞ	1	
31	524W5-12091		GROMMET	ｸﾞﾛﾒｯﾄ	1	(WITHOUT CAKB)
32	235C5-12301		CANVAS	ｷｬﾝﾊﾞｽ	1	
-	535C5-02401		CANVAS	ｷｬﾝﾊﾞｽ	1	[HGH][EXN]
-	535C4-92401		CANVAS	ｷｬﾝﾊﾞｽ	1	[HGL]
33	516G5-13511		SUPPORTER	ｻﾎﾟｰﾀ	2	
34	556C9-92091		MIRROR	ﾐﾗｰ	2	
35	222A9-32011		WASHER	ﾜｯｼｬ	2	
36	524W5-13051		BRACKET	ﾌﾞﾗｹｯﾄ	2	
37	514A5-12021		BOLT	ﾎﾞﾙﾄ	2	
38	516G5-13601		STOPPER	ｽﾄｯﾊﾟ	2	A,B,C,D,E,F:313- G:141- H,J,K:116- L:103-
39	235C5-12171		RUBBER	ﾗﾊﾞｰ	1	A,B,C,D,E,F:642- G:191- H,J,K:172- L:107-
40	235C5-12181		RUBBER	ﾗﾊﾞｰ	1	A,B,C,D,E,F:642- G:191- H,J,K:172- L:107-
41	556C9-92091		MIRROR,CENTER	ﾐﾗｰ	1	[BMC]
42	222A9-32011		WASHER	ﾜｯｼｬ	1	[BMC]
43	529F1-42001		BRACKET	ﾌﾞﾗｹｯﾄ	1	[BMC]
44	01100-08025		BOLT	ﾎﾞﾙﾄ	2	[BMC]
45	01402-00008		NUT	ﾅｯﾄ	2	[BMC]

FIG.86 OVERHEAD GUARD [HG/ZZZ]

(F4045120) オーバヘッドガード

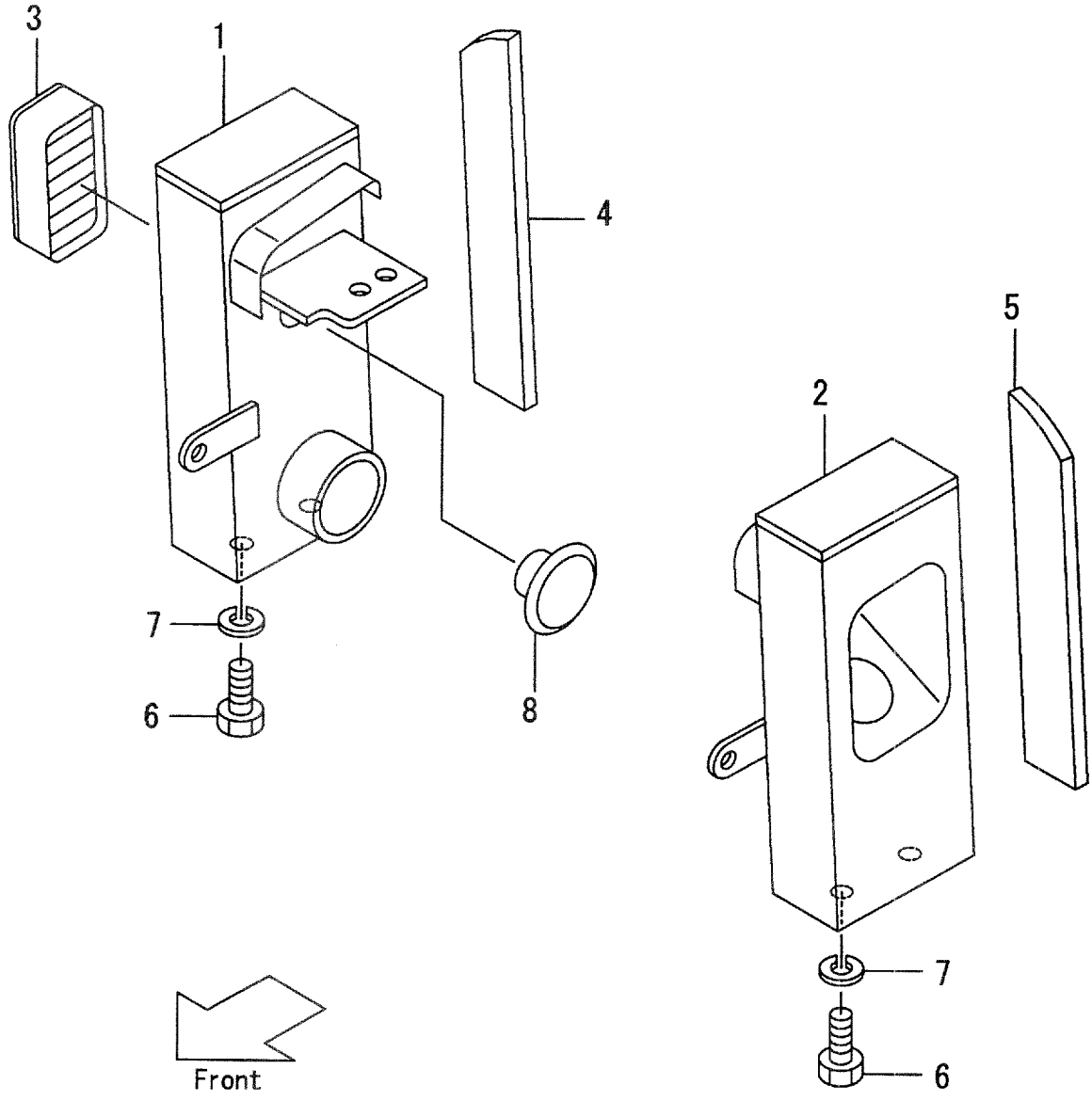

A:FD35C8 D:FD40T8 G:FD50T8 K:FG45T8
B:FD35T8 E:FD45C8 H:FG35T8 L:FG50T8
C:FD40C8 F:FD45T8 J:FG40T8

FIG.86
(F4045120)

Item No	Part No.	Mark	Description		Req'd	Remarks : Serial No.
1	535C5-20301		PIPE,REAR,RH	ﾊﾟｲﾌﾟ	1	[HG/ZZZ]
2	535C5-20351		PIPE,REAR,LH	ﾊﾟｲﾌﾟ	1	[HG/ZZZ]
3	230C1-02041		COVER,AIR-INTAKE	ｶﾊﾞｰ	1	[HG/ZZZ]
4	235C5-12151		RUBBER,RH	ﾗﾊﾞｰ	1	[HG/ZZZ]
5	235C5-12161		RUBBER,LH	ﾗﾊﾞｰ	1	[HG/ZZZ]
6	01103-16030		BOLT	ﾎﾞﾙﾄ	4	[HG/ZZZ]
7	02011-00016		WASHER	ﾜｯｼｬ	4	[HG/ZZZ]
8	524W5-12091		GROMMET	ｸﾞﾛﾒｯﾄ	1	[HG/ZZZ]

FIG.87 ACCEL PEDAL

(F4045210) アクセルペダル

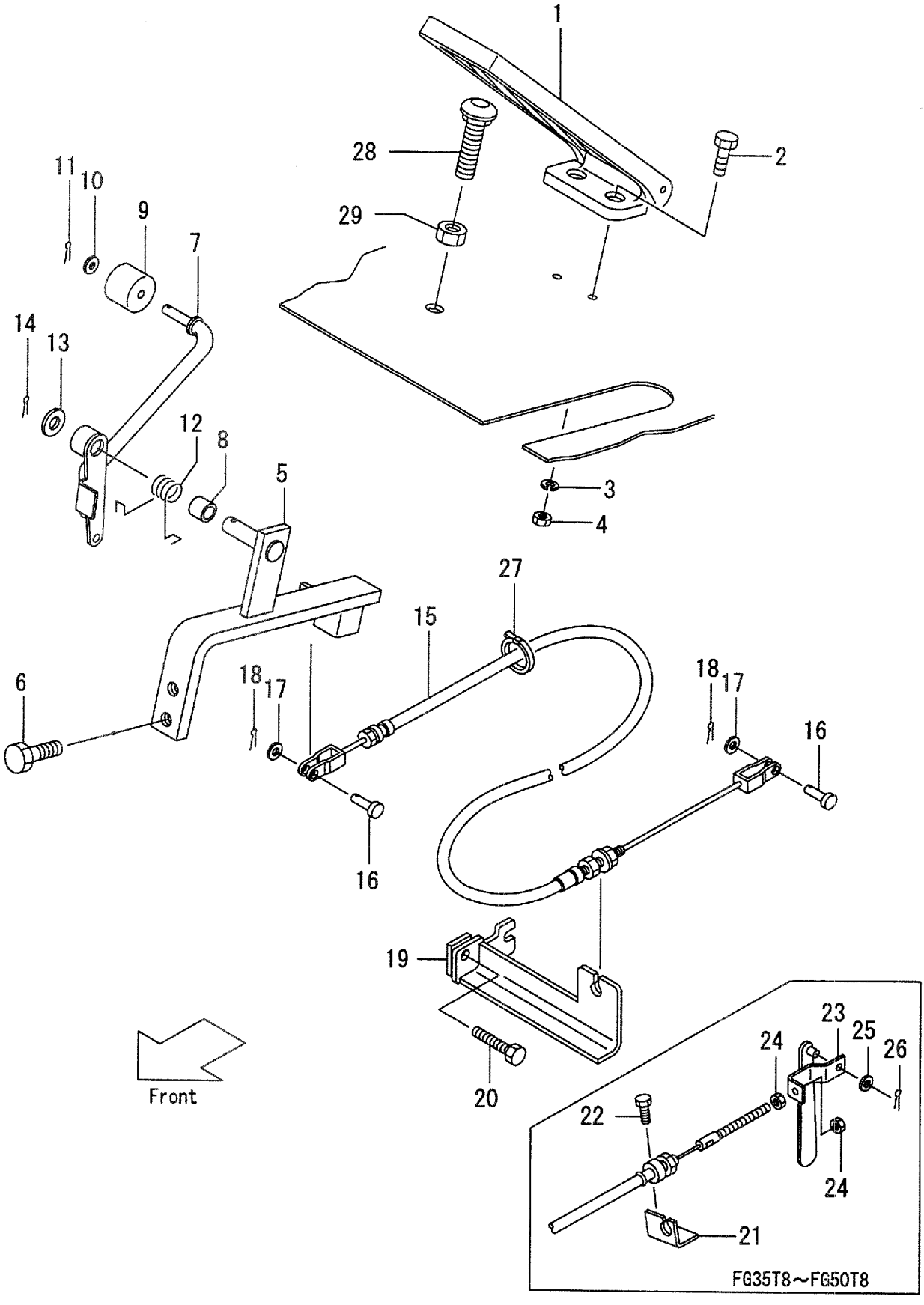

A:FD35C8 D:FD40T8 G:FD50T8 K:FG45T8
B:FD35T8 E:FD45C8 H:FG35T8 L:FG50T8
C:FD40C8 F:FD45T8 J:FG40T8

FIG.87
(F4045210)

Item No	Part No.	Mark	Description		Req'd	Remarks : Serial No.
1	214A5-22051		PEDAL,ACCEL	ﾍﾟﾀﾞﾙ	1	
2	01100-06016		BOLT	ﾎﾞﾙﾄ	2	
3	02010-00006		WASHER	ﾜｯｼｬ	2	
4	01400-00006		NUT	ﾅｯﾄ	2	
5	224W5-22051		BRACKET	ﾌﾞﾗｹｯﾄ	1	A,B,C,D,E,F,G
-	235L5-22041		BRACKET	ﾌﾞﾗｹｯﾄ	1	H,J,K,L
6	01186-10030		BOLT	ﾎﾞﾙﾄ	2	
A1	224W5-20101		LINK-ASSY	ﾘﾝｸｱｯｾﾝ	1	A,B,C,D,E,F,G
						INC.7-11
-	235L5-20001		LINK-ASSY	ﾘﾝｸｱｯｾﾝ	1	H,J,K,L
						INC.7-11
7	NO PART NO.	#	LINK	ﾘﾝｸ	1	A,B,C,D,E,F,G
-	NO PART NO.	#	LINK	ﾘﾝｸ	1	H,J,K,L
8	23655-22101		BUSHING	ﾌﾞｯｼﾝｸﾞ	1	
9	214A5-22001		ROLLER	ﾛｰﾗ	1	
10	02000-00006		WASHER	ﾜｯｼｬ	1	
11	02200-16010		PIN,COTTER	ﾋﾟﾝ	1	
12	25785-22031		SPRING	ｽﾌﾟﾘﾝｸﾞ	1	
13	02000-00010		WASHER	ﾜｯｼｬ	1	
14	02200-32016		PIN,COTTER	ﾋﾟﾝ	1	
15	235C5-22021		WIRE,ACCEL	ﾜｲﾔ	1	A,B,C,D,E,F,G
-	223W5-22101		WIRE,ACCEL	ﾜｲﾔ	1	H,J,K,L
16	02262-06015		PIN	ﾋﾟﾝ	2	
17	02000-00006		WASHER	ﾜｯｼｬ	2	
18	02200-16010		PIN,COTTER	ﾋﾟﾝ	2	
19	230C5-22011		SUPPORT	ｻﾎﾟｰﾄ	1	A,B,C,D,E,F,G
20	01186-10020		BOLT	ﾎﾞﾙﾄ	1	A,B,C,D,E,F,G
21	223W5-22081		BRACKET	ﾌﾞﾗｹｯﾄ	1	H,J,K,L
22	01183-06016		BOLT	ﾎﾞﾙﾄ	1	H,J,K,L
23	24405-22021		YOKE	ﾖｰｸ	1	H,J,K,L
24	01400-00006		NUT	ﾅｯﾄ	2	H,J,K,L
25	02000-00006		WASHER	ﾜｯｼｬ	1	H,J,K,L
26	02200-16010		PIN,COTTER	ﾋﾟﾝ	1	H,J,K,L
27	27042-42292		BAND	ﾊﾞﾝﾄﾞ	1	
28	24255-22101		BOLT	ﾎﾞﾙﾄ	1	A,B,C,D,E,F,G
-	25785-22111		BOLT	ﾎﾞﾙﾄ	1	H,J,K,L
29	01400-00012		NUT	ﾅｯﾄ	1	

FIG.88 ACCEL PEDAL [EXE,EXN]

(F4045220) アクセルペダル

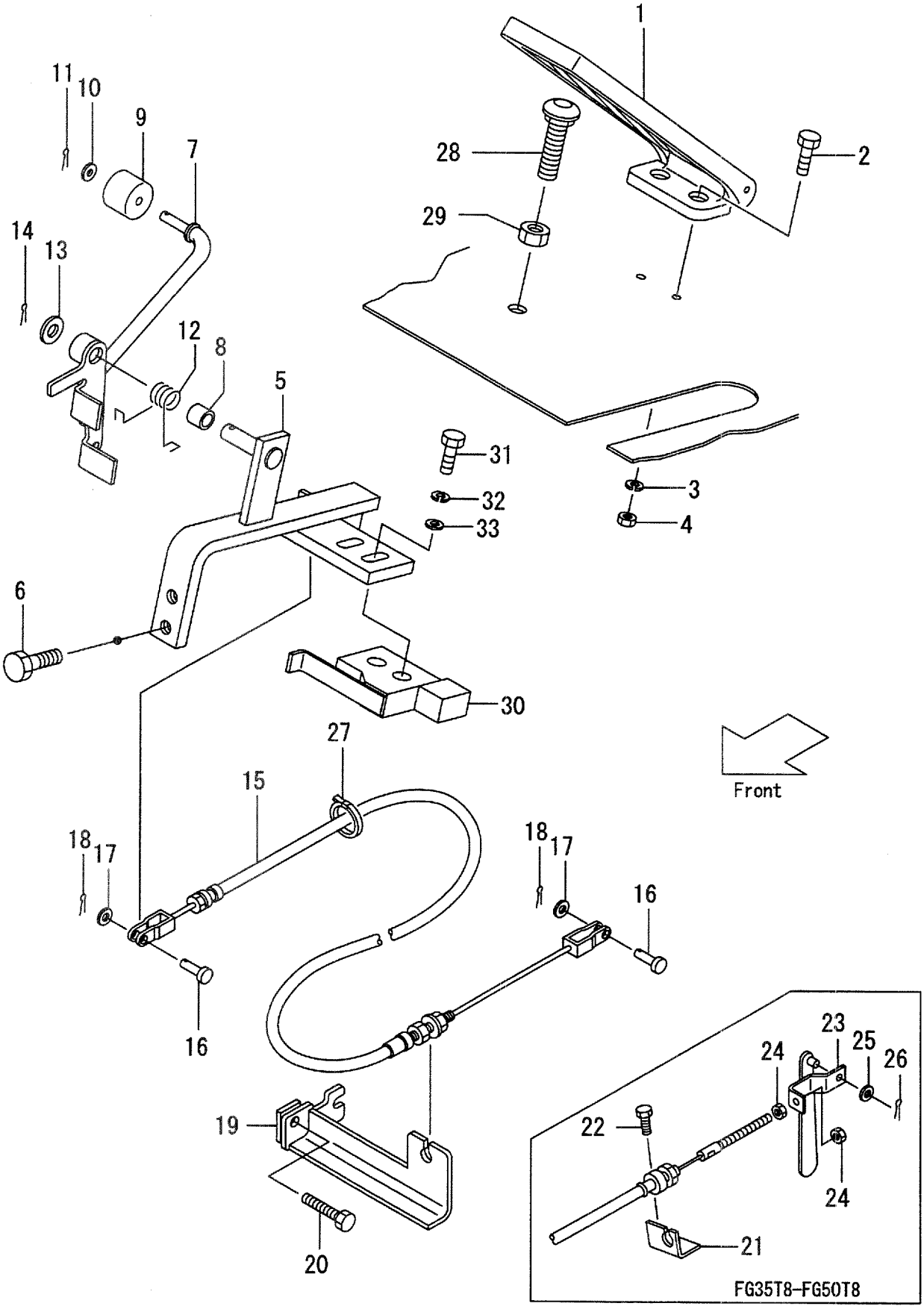

A:FD35C8 D:FD40T8:692- G:FD50T8:194- K:FG45T8:172-
B:FD35T8 E:FD45C8 H:FG35T8:172- L:FG50T8:107-
C:FD40C8 F:FD45T8:692- J:FG40T8:172-

FIG.88
(F4045220)

Item No	Part No.	Mark	Description		Req'd	Remarks : Serial No.
1	214A5-22051		PEDAL,ACCEL	ﾍﾟﾀﾞﾙ	1	
2	01100-06016		BOLT	ﾎﾞﾙﾄ	2	
3	02010-00006		WASHER	ﾜｯｼｬ	2	
4	01400-00006		NUT	ﾅｯﾄ	2	
5	535H3-82141		BRACKET	ﾌﾞﾗｹｯﾄ	1	D,F,G
-	535N3-82141		BRACKET	ﾌﾞﾗｹｯﾄ	1	H,J,K,L
6	01186-10030		BOLT	ﾎﾞﾙﾄ	2	D,F,G,H,J,K,L
A1	535H3-80301		LINK-ASSY	ﾘﾝｸｱｯｾﾝ	1	D,F,G
						INC.7-11
-	535N3-80301		LINK-ASSY	ﾘﾝｸｱｯｾﾝ	1	H,J,K,L
						INC.7-11
7	NO PART NO.	#	LINK	ﾘﾝｸ	1	D,F,G
-	NO PART NO.	#	LINK	ﾘﾝｸ	1	H,J,K,L
8	23655-22101		BUSHING	ﾌﾞｯｼﾝｸﾞ	1	D,F,G,H,J,K,L
9	214A5-22001		ROLLER	ﾛｰﾗ	1	D,F,G,H,J,K,L
10	02000-00006		WASHER	ﾜｯｼｬ	1	D,F,G,H,J,K,L
11	02200-16010		PIN,COTTER	ﾋﾟﾝ	1	D,F,G,H,J,K,L
12	535H3-82171		SPRING	ｽﾌﾟﾘﾝｸﾞ	1	D,F,G,H,J,K,L
13	02000-00010		WASHER	ﾜｯｼｬ	1	D,F,G,H,J,K,L
14	02200-32016		PIN,COTTER	ﾋﾟﾝ	1	D,F,G,H,J,K,L
15	235C5-22021		WIRE,ACCEL	ﾜｲﾔ	1	D,F,G
-	223W5-22101		WIRE,ACCEL	ﾜｲﾔ	1	H,J,K,L
16	02262-06015		PIN	ﾋﾟﾝ	2	D,F,G,H,J,K,L
17	02000-00006		WASHER	ﾜｯｼｬ	2	D,F,G,H,J,K,L
18	02200-16010		PIN,COTTER	ﾋﾟﾝ	2	D,F,G,H,J,K,L
19	230C5-22011		SUPPORT	ｻﾎﾟｰﾄ	1	D,F,G
20	01186-10020		BOLT	ﾎﾞﾙﾄ	1	D,F,G
21	223W5-22081		BRACKET	ﾌﾞﾗｹｯﾄ	1	H,J,K,L
22	01183-06016		BOLT	ﾎﾞﾙﾄ	1	H,J,K,L
23	24405-22021		YOKE	ﾖｰｸ	1	H,J,K,L
24	01400-00006		NUT	ﾅｯﾄ	2	H,J,K,L
25	02000-00006		WASHER	ﾜｯｼｬ	1	H,J,K,L
26	02200-16010		PIN,COTTER	ﾋﾟﾝ	1	H,J,K,L
27	27042-42292		BAND	ﾊﾞﾝﾄﾞ	1	D,F,G,H,J,K,L
28	24255-22101		BOLT	ﾎﾞﾙﾄ	1	D,F,G
-	25785-22111		BOLT	ﾎﾞﾙﾄ	1	H,J,K,L
29	01400-00012		NUT	ﾅｯﾄ	1	D,F,G,H,J,K,L
30	17912-52141		RETAINER,SWITCH	ﾘﾃｰﾅ	1	D,F,G,H,J,K,L
31	01100-04040		BOLT	ﾎﾞﾙﾄ	2	D,F,G,H,J,K,L
32	02010-00004		WASHER	ﾜｯｼｬ	2	D,F,G,H,J,K,L
33	27047-42241		WASHER	ﾜｯｼｬ	2	D,F,G,H,J,K,L

FIG.89 CLUTCH & BRAKE PEDAL (C-TYPE)

(F4045410) クラッチ & ブレーキペダル

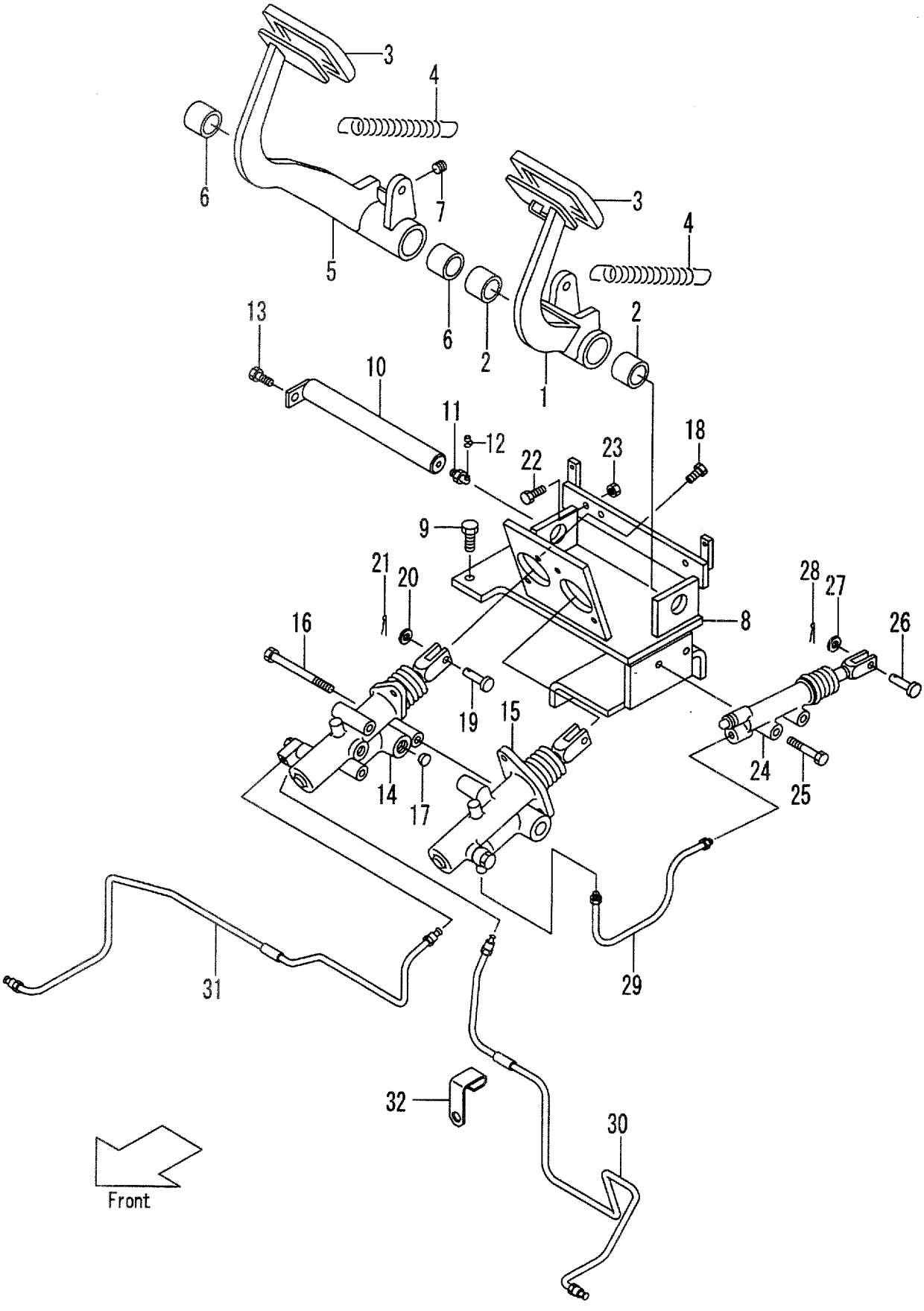

A:FD35C8 D:FD40T8 G:FD50T8 K:FG45T8
B:FD35T8 E:FD45C8 H:FG35T8 L:FG50T8
C:FD40C8 F:FD45T8 J:FG40T8

FIG.89
(F4045410)

Item No	Part No.	Mark	Description		Req'd	Remarks : Serial No.
A1	224W5-30101		PEDAL-ASSY,CLUTCH	ﾍﾟﾀﾞﾙｱｯｾﾝ	1	A,C,E
						INC.1,2
1	NO PART NO.	#	PEDAL,CLUTCH	ﾍﾟﾀﾞﾙ	1	A,C,E
2	23655-42421		BUSHING	ﾌﾞｯｼﾝｸﾞ	2	A,C,E
3	25595-42071		COVER	ｶﾊﾞｰ	2	A,C,E
4	24235-42091		SPRING	ｽﾌﾟﾘﾝｸﾞ	2	A,C,E
A2	224W5-40101		PEDAL-ASSY,BRAKE	ﾌﾞﾚｰｷﾍﾟﾀﾞﾙｱｯｾﾝ	1	A,C,E
						INC.5,6
5	NO PART NO.	#	PEDAL,BRAKE	ﾍﾟﾀﾞﾙ	1	A,C,E
6	23655-42421		BUSHING	ﾌﾞｯｼﾝｸﾞ	2	A,C,E
7	23235-40091		RUBBER	ﾗﾊﾞｰ	1	A,C,E
8	224W5-40121		BRACKET	ﾌﾞﾗｹｯﾄ	1	A,C,E
9	01184-10020		BOLT	ﾎﾞﾙﾄ	4	A,C,E
10	25815-42151		SHAFT	ｼｬﾌﾄ	1	A,C,E
11	04901-00190		FITTING	ﾌｨｯﾃｨﾝｸﾞ	1	A,C,E
12	22199-12401		CAP	ｷｬｯﾌﾟ	1	A,C,E
13	01183-08016		BOLT	ﾎﾞﾙﾄ	1	A,C,E
A3	224W5-40152		BOOSTER-ASSY,CLUTCH & BRAKE		1	A,C,E:1-2479
				ﾌﾞｰｽﾀｱｯｾﾝ		INC.14-17
-	235C5-40211		BOOSTER-ASSY,CLUTCH & BRAKE		1	A,C,E:2480-
				ﾌﾞｰｽﾀｱｯｾﾝ		INC.14-17
14	224W5-30202		BOOSTER,CLUTCH	ﾌﾞｰｽﾀ	1	A,C,E
						SEE FIG.93
15	224W5-40201		BOOSTER,BRAKE	ﾌﾞｰｽﾀ	1	A,C,E:1-2479
						SEE FIG.92
-	235C5-40251		BOOSTER,BRAKE	ﾌﾞｰｽﾀ	1	A,C,E:2480-
						SEE FIG.92
16	522A2-13021		BOLT	ﾎﾞﾙﾄ	3	A,C,E
17	522A2-13011		FILTER	ﾌｲﾙﾀ	1	A,C,E
18	01184-10025		BOLT	ﾎﾞﾙﾄ	4	A,C,E
19	02262-10030		PIN	ﾋﾟﾝ	2	A,C,E
20	02000-00010		WASHER	ﾜｯｼｬ	2	A,C,E
21	02200-32020		PIN,COTTER	ﾋﾟﾝ	2	A,C,E
22	01120-10035		BOLT	ﾎﾞﾙﾄ	2	A,C,E
23	01402-00010		NUT	ﾅｯﾄ	2	A,C,E
24	522A2-10401		CYLINDER,RELEASE	ｼﾘﾝﾀﾞ	1	A,C,E
						SEE FIG.91
25	01184-10050		BOLT	ﾎﾞﾙﾄ	2	A,C,E
26	02262-10030		PIN	ﾋﾟﾝ	1	A,C,E
27	02000-00010		WASHER	ﾜｯｼｬ	1	A,C,E
28	02200-32020		PIN,COTTER	ﾋﾟﾝ	1	A,C,E
29	224W5-42142		PIPE	ﾊﾟｲﾌﾟ	1	A,C,E
30	224W5-42181		PIPE,LH	ﾊﾟｲﾌﾟ	1	A,C
-	228C5-42021		PIPE,LH	ﾊﾟｲﾌﾟ	1	E
31	224W5-42161		PIPE,RH	ﾊﾟｲﾌﾟ	1	A,C
-	228C5-42001		PIPE,RH	ﾊﾟｲﾌﾟ	1	E
32	224W5-42201		CLAMP	ｸﾗﾝﾌﾟ	2	A,C,E

FIG.90 BRAKE & INCHING PEDAL (T-TYPE)

(F4045420) ﾌﾞﾚｰｷ & ｲﾝﾁﾝｸﾞﾍﾟﾀﾞﾙ

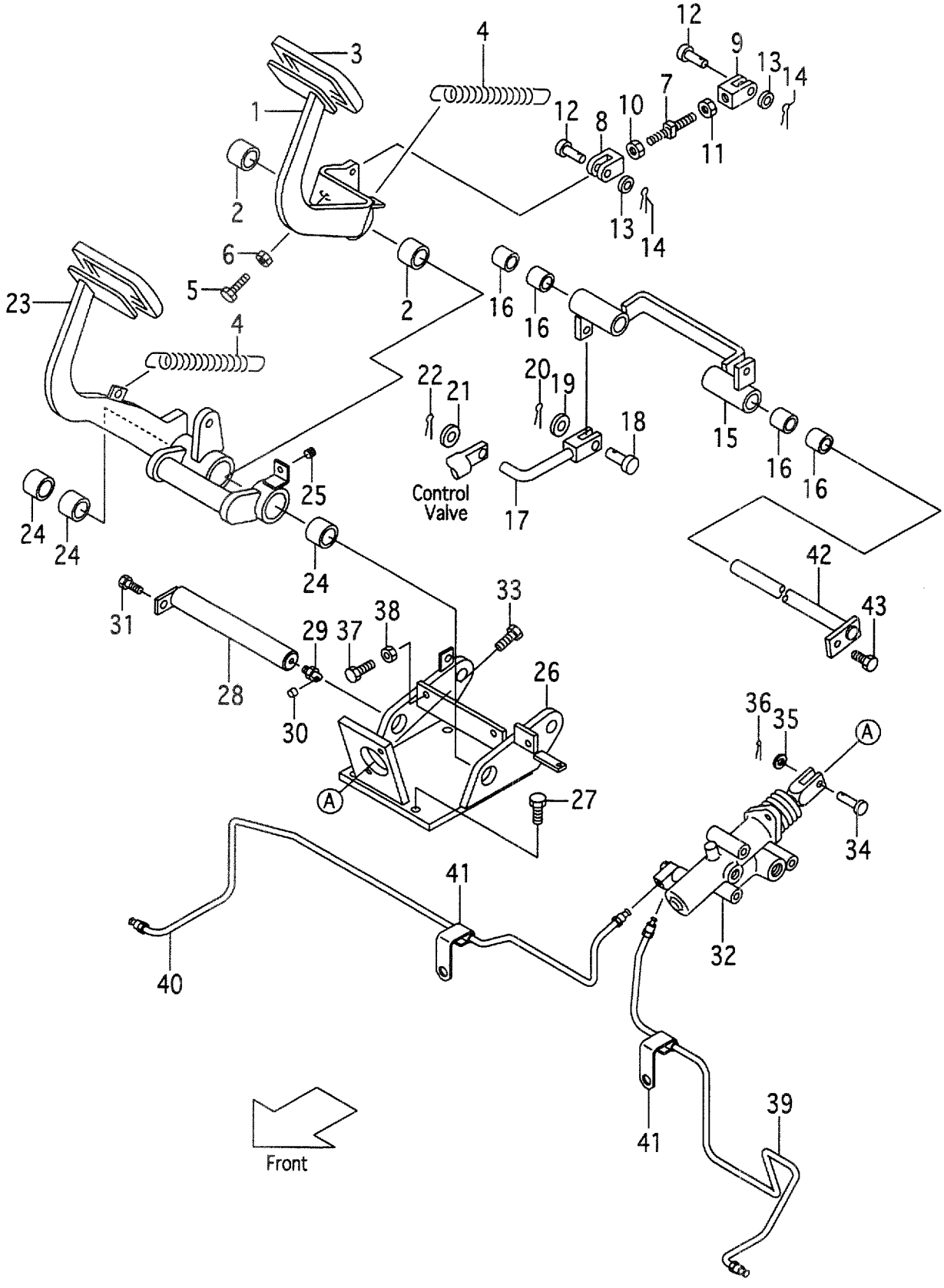

A:FD35C8 D:FD40T8 G:FD50T8 K:FG45T8
B:FD35T8 E:FD45C8 H:FG35T8 L:FG50T8
C:FD40C8 F:FD45T8 J:FG40T8

FIG.90
(F4045420)

Item No	Part No.	Mark	Description		Req'd	Remarks : Serial No.
A1	224X5-40171		PEDAL-ASSY,INCHING	ｲﾝﾁﾝｸﾞﾍﾟﾀﾞﾙｱｯｾﾝ	1	B,D,F,G,H,J,K,L
						INC.1,2
1	NO PART NO.	#	PEDAL,INCHING	ﾍﾟﾀﾞﾙ	1	B,D,F,G,H,J,K,L
2	23655-42421		BUSHING	ﾌﾞｯｼﾝｸﾞ	2	B,D,F,G,H,J,K,L
3	25595-42071		COVER	ｶﾊﾞｰ	2	B,D,F,G,H,J,K,L
4	24235-42091		SPRING	ｽﾌﾟﾘﾝｸﾞ	2	B,D,F,G,H,J,K,L
5	01120-12035		BOLT	ﾎﾞﾙﾄ	1	B,D,F,G,H,J,K,L
6	01402-00012		NUT	ﾅｯﾄ	1	B,D,F,G,H,J,K,L
7	215E5-42151		ROD	ﾛｯﾄﾞ	1	B,D,F,G,H,J,K,L
8	215E5-42131		YOKE	ﾖｰｸ	1	B,D,F,G,H,J,K,L
9	215E5-42141		YOKE	ﾖｰｸ	1	B,D,F,G,H,J,K,L
10	01400-00008		NUT	ﾅｯﾄ	1	B,D,F,G,H,J,K,L
11	01405-00008		NUT	ﾅｯﾄ	1	B,D,F,G,H,J,K,L
12	02262-10030		PIN	ﾋﾟﾝ	2	B,D,F,G,H,J,K,L
13	02000-00010		WASHER	ﾜｯｼｬ	2	B,D,F,G,H,J,K,L
14	02200-03025		PIN,COTTER	ﾋﾟﾝ	2	B,D,F,G,H,J,K,L
15	224X5-42131		LINK,B	ﾘﾝｸ	1	B,D,F,G,H,J,K,L
						INC.16
16	23647-40121		BUSHING	ﾌﾞｯｼﾝｸﾞ	4	B,D,F,G,H,J,K,L
17	224X5-42181		ROD,CONNECTING	ﾛｯﾄﾞ	1	B,D,F,G,H,J,K,L
18	02262-08030		PIN	ﾋﾟﾝ	1	B,D,F,G,H,J,K,L
19	02000-00008		WASHER	ﾜｯｼｬ	1	B,D,F,G,H,J,K,L
20	02200-02016		PIN,COTTER	ﾋﾟﾝ	1	B,D,F,G,H,J,K,L
21	02000-00006		WASHER	ﾜｯｼｬ	1	B,D,F,G,H,J,K,L
22	02200-16016		PIN,COTTER	ﾋﾟﾝ	1	B,D,F,G,H,J,K,L
A2	224X5-40181		PEDAL-ASSY,BRAKE	ﾌﾞﾚｰｷﾍﾟﾀﾞﾙｱｯｾﾝ	1	B,D,F,G,H,J,K,L
						INC.23,24
23	NO PART NO.	#	PEDAL,BRAKE	ﾍﾟﾀﾞﾙ	1	B,D,F,G,H,J,K,L
24	23655-42421		BUSHING	ﾌﾞｯｼﾝｸﾞ	3	B,D,F,G,H,J,K,L
25	23235-40091		RUBBER	ﾗﾊﾞｰ	1	B,D,F,G,H,J,K,L
26	224X5-40131		BRACKET	ﾌﾞﾗｹｯﾄ	1	B,D,F,G,H,J,K,L
27	01184-10020		BOLT	ﾎﾞﾙﾄ	4	B,D,F,G,H,J,K,L
28	224X5-42101		SHAFT	ｼｬﾌﾄ	1	B,D,F,G,H,J,K,L
29	04901-00190		FITTING,C	ﾌｨｯﾃｨﾝｸﾞ	1	B,D,F,G,H,J,K,L
30	22199-12401		CAP	ｷｬｯﾌﾟ	1	B,D,F,G,H,J,K,L
31	01183-08016		BOLT	ﾎﾞﾙﾄ	1	B,D,F,G,H,J,K,L
32	224X5-40201		BOOSTER	ﾌﾞｰｽﾀ	1	B,D,F,H,J,K:1-381
						SEE FIG.92
-	235H5-40201		BOOSTER	ﾌﾞｰｽﾀ	1	B,D,F,H,J,K:382-
						SEE FIG.92
-	235H5-40201		BOOSTER,BRAKE	ﾌﾞｰｽﾀ	1	G,L
						SEE FIG.92
33	01184-10025		BOLT	ﾎﾞﾙﾄ	2	B,D,F,G,H,J,K,L
34	02262-10030		PIN	ﾋﾟﾝ	1	B,D,F,G,H,J,K,L
35	02000-00010		WASHER	ﾜｯｼｬ	1	B,D,F,G,H,J,K,L
36	02200-32020		PIN,COTTER	ﾋﾟﾝ	1	B,D,F,G,H,J,K,L
37	01120-10035		BOLT	ﾎﾞﾙﾄ	2	B,D,F,G,H,J,K,L
38	01402-00010		NUT	ﾅｯﾄ	2	B,D,F,G,H,J,K,L
39	224X5-42221		BRAKE,PIPE,LH	ﾌﾞﾚｰｷ	1	B,D,H,J
-	228E5-42021		BRAKE,PIPE,LH	ﾌﾞﾚｰｷ	1	F,G,K,L

FIG.90 BRAKE & INCHING PEDAL (T-TYPE)

(F4045420) ﾌﾞﾚｰｷ & ｲﾝﾁﾝｸﾞﾍﾟﾀﾞﾙ

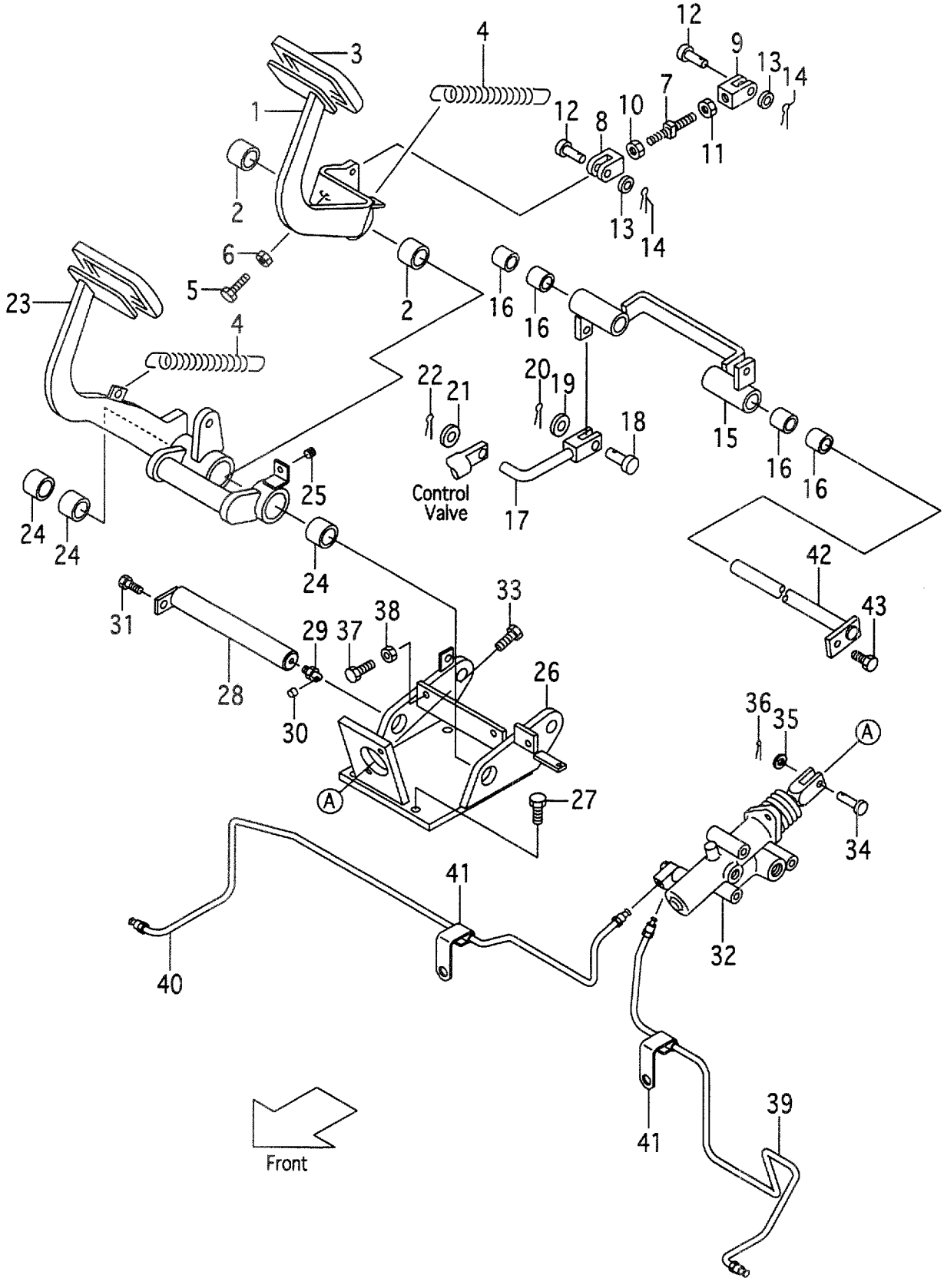

A:FD35C8 D:FD40T8 G:FD50T8 K:FG45T8
B:FD35T8 E:FD45C8 H:FG35T8 L:FG50T8
C:FD40C8 F:FD45T8 J:FG40T8

FIG.90
(F4045420)

Item No	Part No.	Mark	Description		Req'd	Remarks : Serial No.
40	224X5-42201		BRAKE,PIPE,RH	ﾌﾞﾚｰｷ	1	B,D,H,J
-	228E5-42001		BRAKE,PIPE,RH	ﾌﾞﾚｰｷ	1	F,G,K,L
41	224W5-42201		CLAMP	ｸﾗﾝﾌﾟ	2	B,D,F,G,H,J,K,L
42	224X3-92061		SHAFT	ｼｬﾌﾄ	1	B,D,F,G,H,J,K,L
43	01183-08020		BOLT	ﾎﾞﾙﾄ	1	B,D,F,G,H,J,K,L

FIG.91 CLUTCH RELEASE CYLINDER (C-TYPE)

(F4045430) クラッチリリースシリンダ

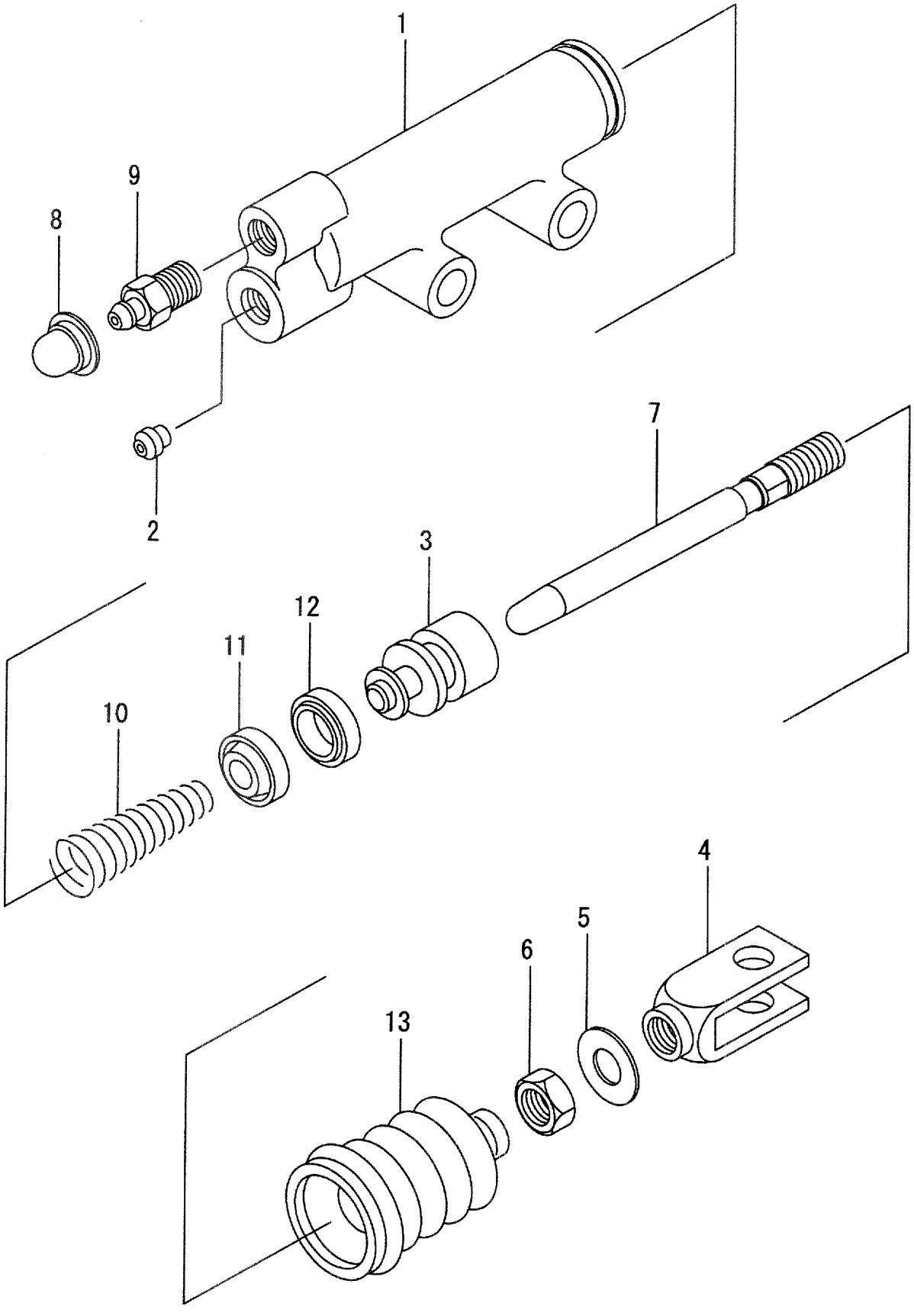

A:FD35C8 D:FD40T8 G:FD50T8 K:FG45T8
B:FD35T8 E:FD45C8 H:FG35T8 L:FG50T8
C:FD40C8 F:FD45T8 J:FG40T8

FIG.91
(F4045430)

Item No	Part No.	Mark	Description		Req'd	Remarks : Serial No.
A1	522A2-10401		CYL-ASSY,CLUTCH-RELEASE		1	A,C,E
				ｼﾘﾝﾀﾞｱｯｾﾝ		INC.1-13
1	NO PART NO.	#	BODY	ﾎﾞﾃﾞｨ	1	A,C,E
2	NO PART NO.	#	SEAT	ｼｰﾄ	1	A,C,E
A2	522A2-18541		PISTON-SUB-ASSY	ﾋﾟｽﾄﾝｻﾌﾞｱｯｾﾝ	1	A,C,E
						INC.3,11,12
3	NO PART NO.	#*	PISTON	ﾋﾟｽﾄﾝ	1	A,C,E
A3	522A2-18551		ROD-SUB-ASSY,PUSH	ﾛｯﾄﾞｻﾌﾞｱｯｾﾝ	1	A,C,E
						INC.4-7
4	NO PART NO.	#	CLEVIS	ｸﾚﾋﾞｽ	1	A,C,E
5	NO PART NO.	#	WASHER	ﾜｯｼｬ	1	A,C,E
6	NO PART NO.	#	NUT	ﾅｯﾄ	1	A,C,E
7	NO PART NO.	#	ROD	ﾛｯﾄﾞ	1	A,C,E
8	522A2-18561	*	CAP	ｷｬｯﾌﾟ	1	A,C,E
9	522A2-18571		PLUG	ﾌﾟﾗｸﾞ	1	A,C,E
10	522A2-18581	*	SPRING	ｽﾌﾟﾘﾝｸﾞ	1	A,C,E
11	NO PART NO.	#*	CUP	ｶｯﾌﾟ	1	A,C,E
12	NO PART NO.	#*	CUP	ｶｯﾌﾟ	1	A,C,E
13	522A2-18591	*	BOOT	ﾌﾞｰﾂ	1	A,C,E
K1	522A2-11601		KIT,OVERHAUL	ｵｰﾊﾞｰﾎｰﾙｷｯﾄ	1	A,C,E
						INC.3,8,10-13

FIG.92 BRAKE BOOSTER

(F4045440) ﾌﾞﾚｰｷﾌﾞｰｽﾀ

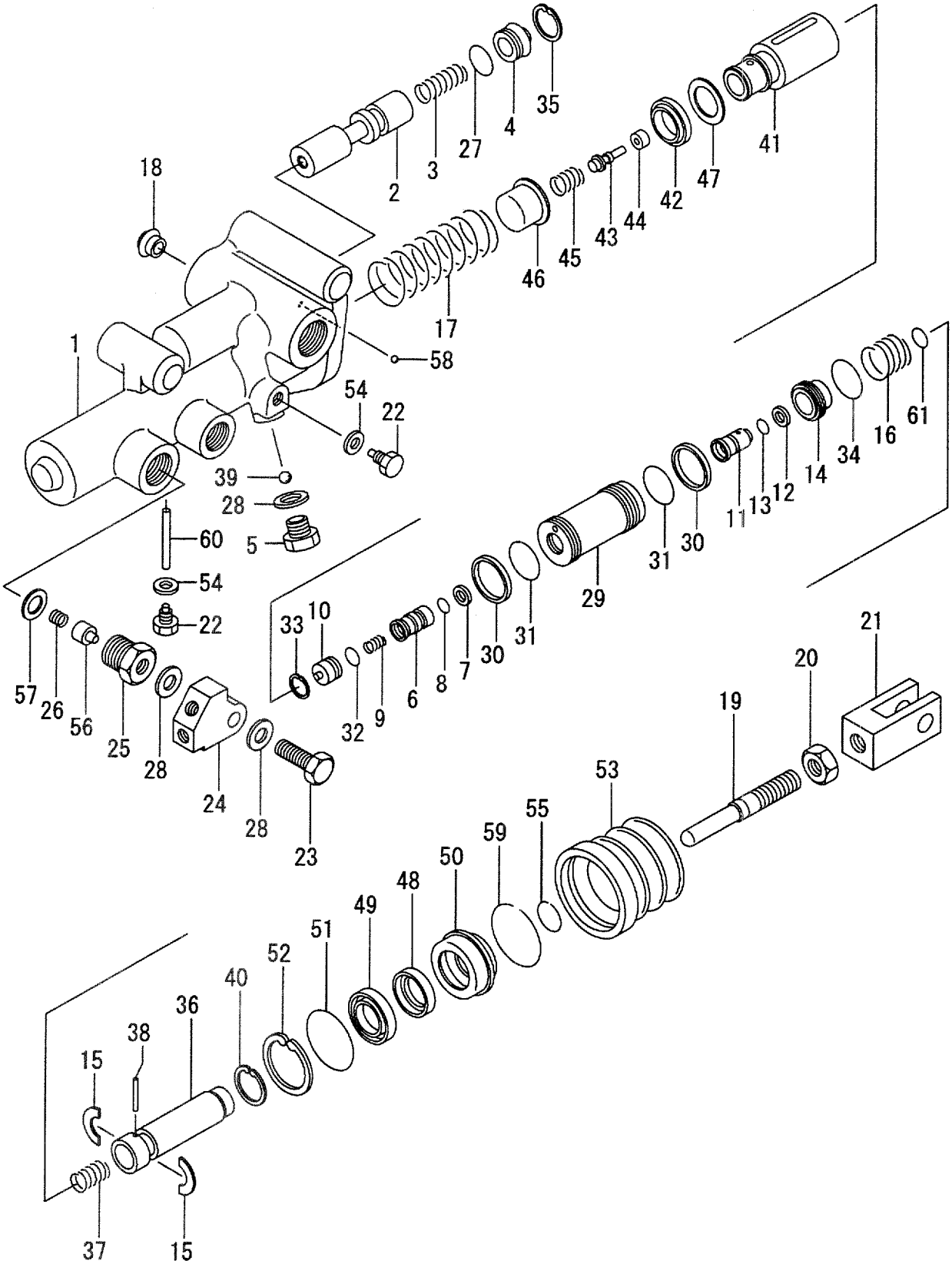

A:FD35C8 D:FD40T8 G:FD50T8 K:FG45T8
B:FD35T8 E:FD45C8 H:FG35T8 L:FG50T8
C:FD40C8 F:FD45T8 J:FG40T8

FIG.92
(F4045440)

Item No	Part No.	Mark	Description		Req'd	Remarks : Serial No.
A1	224W5-40201		BOOSTER-ASSY,BRAKE	ﾌﾞﾚｰｷﾌﾞｰｽﾀｱｯｾﾝ	1	A,C,E:1-2479 INC.1-17,19-61
-	235C5-40251		BOOSTER-ASSY,BRAKE	ﾌﾞﾚｰｷﾌﾞｰｽﾀｱｯｾﾝ	1	A,C,E:2480- INC.1-17,19-61
-	224X5-40201		BOOSTER-ASSY,BRAKE	ﾌﾞﾚｰｷﾌﾞｰｽﾀｱｯｾﾝ	1	B,D,F,H,J,K:1-381 INC.1-61
-	235H5-40201		BOOSTER-ASSY,BRAKE	ﾌﾞﾚｰｷﾌﾞｰｽﾀｱｯｾﾝ	1	B,D,F,H,J,K:382- INC.1-61
-	235H5-40201		BOOSTER-ASSY,BRAKE	ﾌﾞﾚｰｷﾌﾞｰｽﾀｱｯｾﾝ	1	G,L INC.1-61
1	NO PART NO.	#	BODY	ﾎﾞﾃﾞｨ	1	
2	522A2-18411		SPOOL	ｽﾌﾟｰﾙ	1	
3	522A2-18011		SPRING	ｽﾌﾟﾘﾝｸﾞ	1	
4	522A2-18021		PLUG	ﾌﾟﾗｸﾞ	1	
5	522A2-18041		PLUG	ﾌﾟﾗｸﾞ	1	
A2	522A2-18071		VALVE-SUB-ASSY	ﾊﾞﾙﾌﾞｻﾌﾞｱｯｾﾝ	1	INC.6-8
6	NO PART NO.	#	VALVE	ﾊﾞﾙﾌﾞ	1	
7	NO PART NO.	#	RING	ﾘﾝｸﾞ	1	
8	NO PART NO.	#	O-RING	Oﾘﾝｸﾞ	1	
9	522A2-18081		SPRING	ｽﾌﾟﾘﾝｸﾞ	1	
10	522A2-18091		PLUG	ﾌﾟﾗｸﾞ	1	
A3	522A2-18161		SEAT-SUB-ASSY	ｼｰﾄｻﾌﾞｱｯｾﾝ	1	INC.11-13
11	NO PART NO.	#	SEAT	ｼｰﾄ	1	
12	NO PART NO.	#	RING	ﾘﾝｸﾞ	1	
13	NO PART NO.	#	O-RING	Oﾘﾝｸﾞ	1	
14	224W5-42431		PISTON	ﾋﾟｽﾄﾝ	1	
15	522A2-18201		WASHER	ﾜｯｼｬ	1	
16	224W5-42441		SPRING	ｽﾌﾟﾘﾝｸﾞ	1	
17	522A2-18241		SPRING	ｽﾌﾟﾘﾝｸﾞ	1	
18	522A2-18531		SEAT	ｼｰﾄ	1	B,D,F,H,J,K
A4	522A2-18301		ROD-SUB-ASSY,PUSH	ﾛｯﾄﾞｻﾌﾞｱｯｾﾝ	1	INC.19-21
19	NO PART NO.	#	ROD	ﾛｯﾄﾞ	1	
20	NO PART NO.	#	NUT	ﾅｯﾄ	1	
21	NO PART NO.	#	CLEVIS	ｸﾚﾋﾞｽ	1	
22	522A2-18311		BOLT	ﾎﾞﾙﾄ	2	
23	522A2-18471		BOLT	ﾎﾞﾙﾄ	2	
24	522A2-18481		UNION	ﾕﾆｵﾝ	1	
25	522A2-18491		PLUG	ﾌﾟﾗｸﾞ	1	
26	522A2-18511		SPRING	ｽﾌﾟﾘﾝｸﾞ	1	
27	522A2-18031	*	O-RING	Oﾘﾝｸﾞ	1	
28	522A2-18051	*	GASKET	ｶﾞｽｹｯﾄ	3	
A5	522A2-18061		PISTON-SUB-ASSY,POWER	ﾋﾟｽﾄﾝｻﾌﾞｱｯｾﾝ	1	INC.29-31
29	NO PART NO.	#*	PISTON	ﾋﾟｽﾄﾝ	1	
30	NO PART NO.	#*	RING	ﾘﾝｸﾞ	2	
31	NO PART NO.	#*	O-RING	Oﾘﾝｸﾞ	2	
32	522A2-18101	*	O-RING	Oﾘﾝｸﾞ	1	
33	522A2-18111	*	RING,SNAP	ｽﾅｯﾌﾟﾘﾝｸﾞ	1	
34	522A2-18121	*	O-RING	Oﾘﾝｸﾞ	1	
35	522A2-18131	*	RING,SNAP	ｽﾅｯﾌﾟﾘﾝｸﾞ	1	
36	224W5-42401		PISTON	ﾋﾟｽﾄﾝ	1	

FIG.92 BRAKE BOOSTER

(F4045440) ﾌﾞﾚｰｷﾌﾞｰｽﾀ

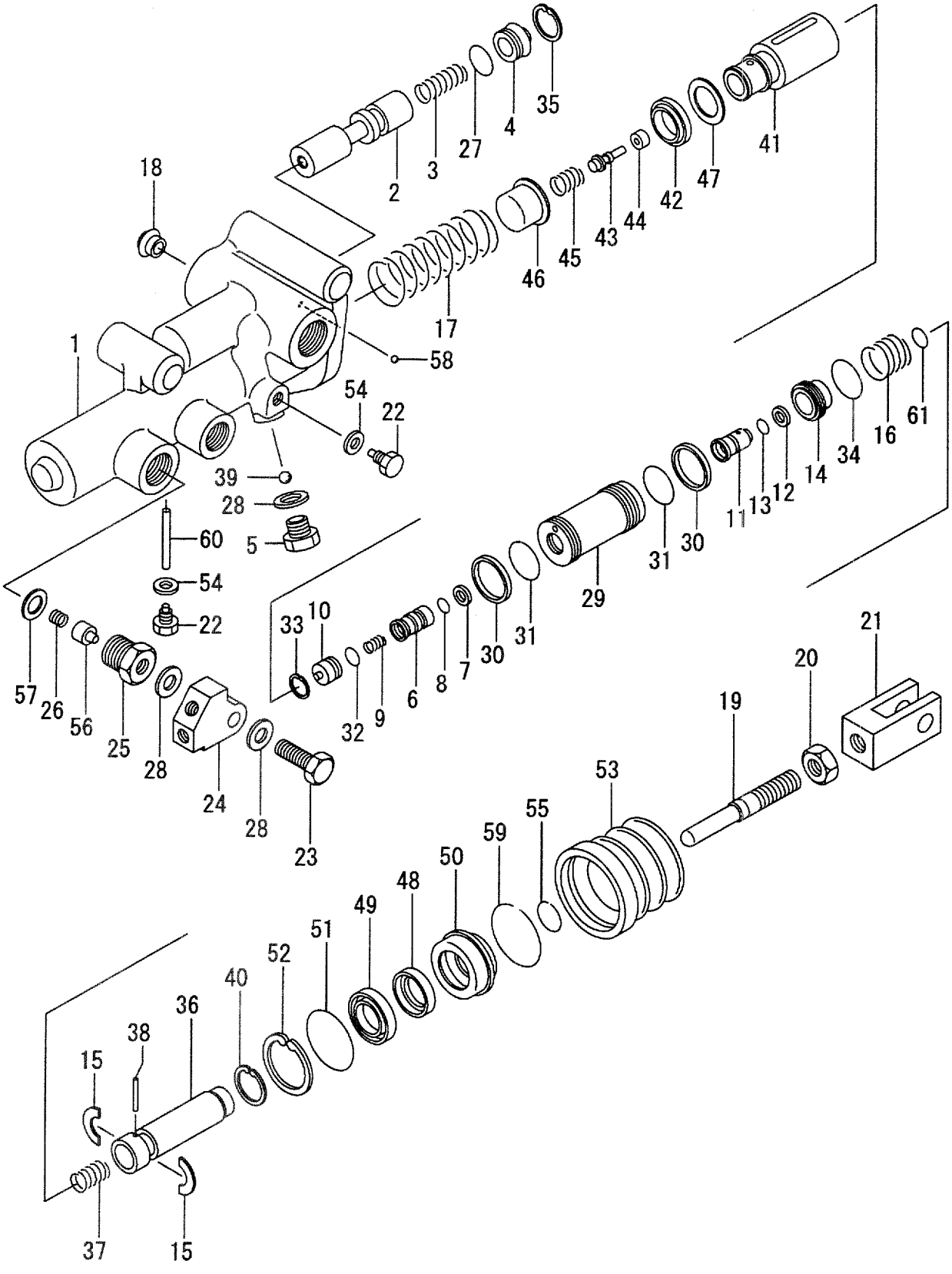

A:FD35C8 D:FD40T8 G:FD50T8 K:FG45T8
B:FD35T8 E:FD45C8 H:FG35T8 L:FG50T8
C:FD40C8 F:FD45T8 J:FG40T8

FIG.92
(F4045440)

Item No	Part No.	Mark	Description		Req'd	Remarks : Serial No.
37	224W5-42411		SPRING	ｽﾌﾟﾘﾝｸﾞ	1	A,B,C,D,E,F:1-2479 H,J,K:1-381
-	235H5-42101		SPRING	ｽﾌﾟﾘﾝｸﾞ	1	A,B,C,D,E,F:2480- H,J,K:382-
-	235H5-42101		SPRING	ｽﾌﾟﾘﾝｸﾞ	1	G,L
38	522A2-18171	*	PIN	ﾋﾟﾝ	1	
39	522A2-18391	*	BALL	ﾎﾞｰﾙ	1	
40	522A2-18211	*	RING	ﾘﾝｸﾞ	1	
A6	522A2-18231		PISTON-SUB-ASSY	ﾋﾟｽﾄﾝｻﾌﾞｱｯｾﾝ	1	INC.41-47
41	NO PART NO.	#*	PISTON	ﾋﾟｽﾄﾝ	1	
42	NO PART NO.	#*	CUP	ｶｯﾌﾟ	1	
43	NO PART NO.	#*	ROD	ﾛｯﾄﾞ	1	
44	NO PART NO.	#*	VALVE	ﾊﾞﾙﾌﾞ	1	
45	NO PART NO.	#*	SPRING	ｽﾌﾟﾘﾝｸﾞ	1	
46	NO PART NO.	#*	CASE	ｹｰｽ	1	
47	NO PART NO.	#*	RING	ﾘﾝｸﾞ	1	
A7	522A2-18251		GUIDE-SUB-ASSY	ｶﾞｲﾄﾞｻﾌﾞｱｯｾﾝ	1	INC.48-50
48	NO PART NO.	#*	GUIDE	ｶﾞｲﾄﾞ	1	
49	NO PART NO.	#*	CUP	ｶｯﾌﾟ	1	
50	NO PART NO.	#*	CUP	ｶｯﾌﾟ	1	
51	522A2-18261	*	O-RING	Oﾘﾝｸﾞ	1	
52	522A2-18271	*	RING,SNAP	ｽﾅｯﾌﾟﾘﾝｸﾞ	1	
53	522A2-18291	*	BOOT	ﾌﾞｰﾂ	1	
54	522A2-18321	*	GASKET	ｶﾞｽｹｯﾄ	2	
55	522A2-18331	*	RING,SNAP	ｽﾅｯﾌﾟﾘﾝｸﾞ	1	
56	522A2-18501	*	VALVE	ﾊﾞﾙﾌﾞ	1	
57	522A2-18521	*	GASKET	ｶﾞｽｹｯﾄ	1	
58	522A2-18371	*	BALL	ﾎﾞｰﾙ	1	
59	522A2-18381	*	RING,SNAP	ｽﾅｯﾌﾟﾘﾝｸﾞ	1	
60	522A2-18401	*	PIN	ﾋﾟﾝ	1	
61	55952-18021	*	O-RING	Oﾘﾝｸﾞ	1	
K1	224W5-42451		KIT,OVERHAUL	ｵｰﾊﾞｰﾎｰﾙｷｯﾄ	1	INC.27-35,38-61

FIG.93 CLUTCH BOOSTER (C-TYPE)

(F4045450) クラッチブースタ

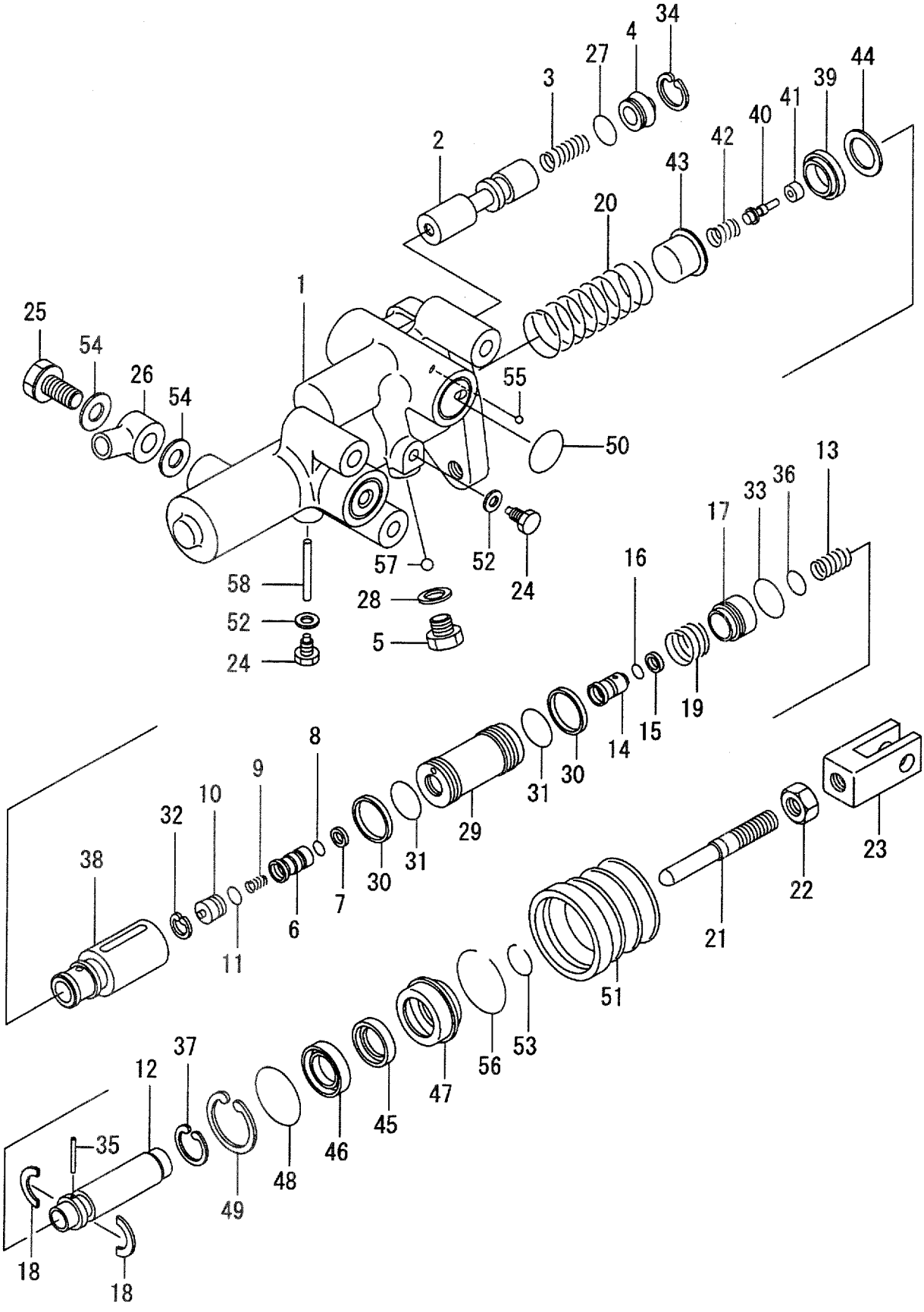

A:FD35C8 D:FD40T8 G:FD50T8 K:FG45T8
B:FD35T8 E:FD45C8 H:FG35T8 L:FG50T8
C:FD40C8 F:FD45T8 J:FG40T8

FIG.93
(F4045450)

Item No	Part No.	Mark	Description		Req'd	Remarks : Serial No.
A1	224W5-30202		BOOSTER-ASSY,CLUTCH		1	A,C,E
				ﾌﾞｰｽﾀｱｯｾﾝ		INC.1-58
1	NO PART NO.	#	BODY	ﾎﾞﾃﾞｨ	1	A,C,E
2	224W5-32511		SPOOL	ｽﾌﾟｰﾙ	1	A,C,E
3	522A2-18011		SPRING	ｽﾌﾟﾘﾝｸﾞ	1	A,C,E
4	522A2-18021		PLUG	ﾌﾟﾗｸﾞ	1	A,C,E
5	522A2-18041		PLUG	ﾌﾟﾗｸﾞ	1	A,C,E
A2	522A2-18071		VALVE-SUB-ASSY	ﾊﾞﾙﾌﾞｻﾌﾞｱｯｾﾝ	1	A,C,E
						INC.6-8
6	NO PART NO.	#	VALVE	ﾊﾞﾙﾌﾞ	1	A,C,E
7	NO PART NO.	#	RING	ﾘﾝｸﾞ	1	A,C,E
8	NO PART NO.	#	O-RING	Oﾘﾝｸﾞ	1	A,C,E
9	522A2-18081		SPRING	ｽﾌﾟﾘﾝｸﾞ	1	A,C,E
10	522A2-18091		PLUG	ﾌﾟﾗｸﾞ	1	A,C,E
11	522A2-18101		RING	ﾘﾝｸﾞ	1	A,C,E
12	224W5-42401		PISTON	ﾋﾟｽﾄﾝ	1	A,C,E
13	224W5-32421		SPRING	ｽﾌﾟﾘﾝｸﾞ	1	A,C,E
A3	522A2-18161		SEAT-SUB-ASSY	ｼｰﾄｻﾌﾞｱｯｾﾝ	1	A,C,E
						INC.14-16
14	NO PART NO.	#	SEAT	ｼｰﾄ	1	A,C,E
15	NO PART NO.	#	RING	ﾘﾝｸﾞ	1	A,C,E
16	NO PART NO.	#	O-RING	Oﾘﾝｸﾞ	1	A,C,E
17	224W5-42431		PISTON	ﾋﾟｽﾄﾝ	1	A,C,E
18	522A2-18201		WASHER	ﾜｯｼｬ	1	A,C,E
19	522A2-18221		SPRING	ｽﾌﾟﾘﾝｸﾞ	1	A,C,E
20	NO PART NO.		SPRING	ｽﾌﾟﾘﾝｸﾞ	1	A,C,E
A4	522A2-18301		ROD-SUB-ASSY,PUSH	ﾛｯﾄﾞｻﾌﾞｱｯｾﾝ	1	A,C,E
						INC.21-23
21	NO PART NO.	#	ROD,PUSH	ﾛｯﾄﾞ	1	A,C,E
22	NO PART NO.	#	NUT	ﾅｯﾄ	1	A,C,E
23	NO PART NO.	#	CLEVIS	ｸﾚﾋﾞｽ	1	A,C,E
24	55952-18021		O-RING	Oﾘﾝｸﾞ	2	A,C,E
25	522A2-18341		BOLT	ﾎﾞﾙﾄ	1	A,C,E
26	522A2-18351		UNION	ﾕﾆｵﾝ	2	A,C,E
27	522A2-18031	*	O-RING	Oﾘﾝｸﾞ	1	A,C,E
28	522A2-18051	*	GASKET	ｶﾞｽｹｯﾄ	1	A,C,E
A5	224W5-32401		PISTON-SUB-ASSY	ﾋﾟｽﾄﾝｻﾌﾞｱｯｾﾝ	1	A,C,E
						INC.29-31
29	NO PART NO.	#*	PISTON	ﾋﾟｽﾄﾝ	1	A,C,E
30	NO PART NO.	#*	RING	ﾘﾝｸﾞ	2	A,C,E
31	NO PART NO.	#*	O-RING	Oﾘﾝｸﾞ	2	A,C,E
32	522A2-18111	*	RING,SNAP	ｽﾅｯﾌﾟﾘﾝｸﾞ	1	A,C,E
33	522A2-18121	*	O-RING	Oﾘﾝｸﾞ	1	A,C,E
34	522A2-18131	*	RING,SNAP	ｽﾅｯﾌﾟﾘﾝｸﾞ	1	A,C,E
35	522A2-18171	*	PIN	ﾋﾟﾝ	1	A,C,E
36	522A2-18181	*	O-RING	Oﾘﾝｸﾞ	1	A,C,E
37	522A2-18211	*	RING,SNAP	ｽﾅｯﾌﾟﾘﾝｸﾞ	1	A,C,E
A6	224W5-32441		PISTON-SUB-ASSY	ﾋﾟｽﾄﾝｻﾌﾞｱｯｾﾝ	1	A,C,E
						INC.38-44
38	NO PART NO.	#*	PISTON	ﾋﾟｽﾄﾝ	1	A,C,E

FIG.93 CLUTCH BOOSTER (C-TYPE)

(F4045450) クラッチブースタ

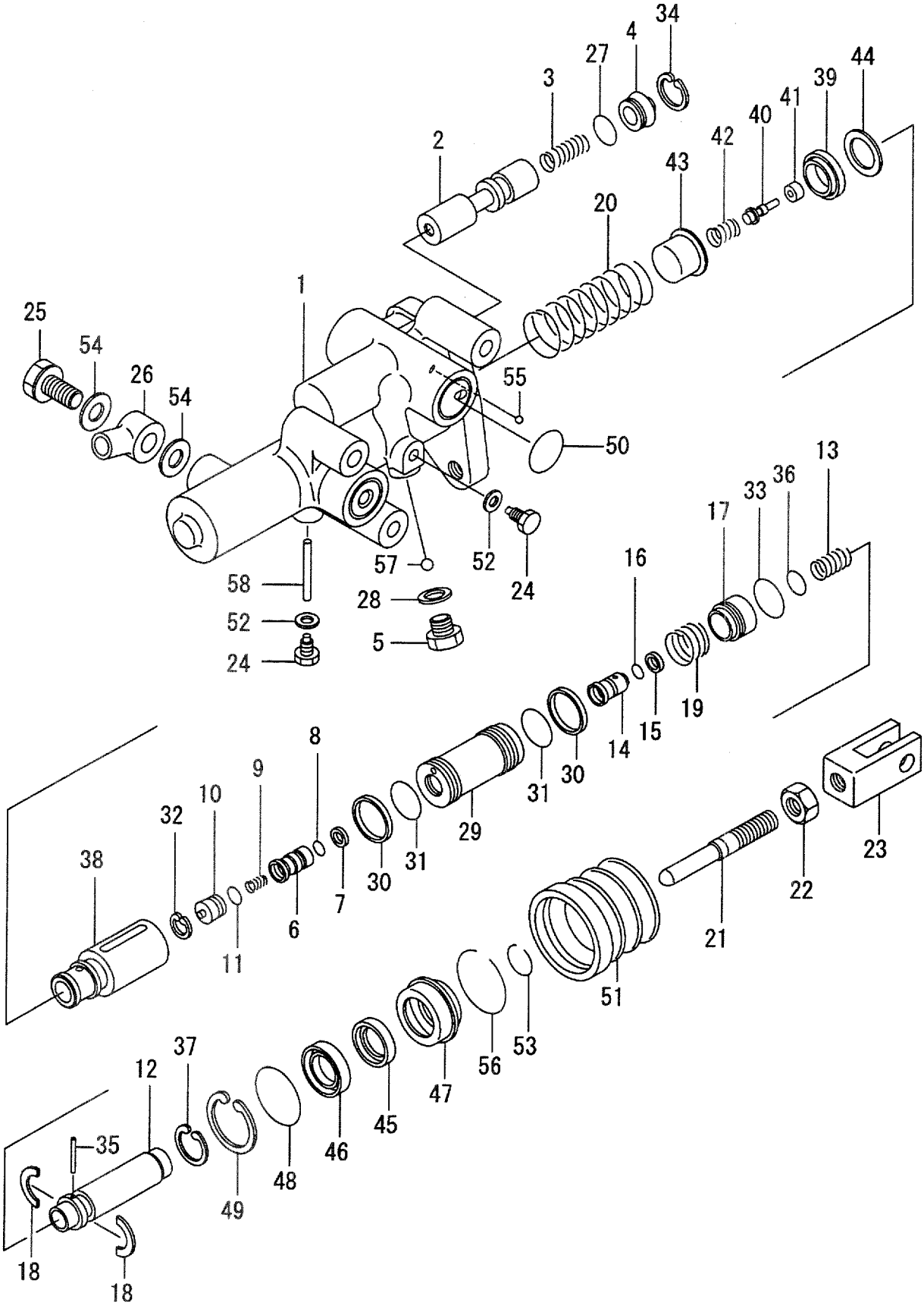

A:FD35C8 D:FD40T8 G:FD50T8 K:FG45T8
B:FD35T8 E:FD45C8 H:FG35T8 L:FG50T8
C:FD40C8 F:FD45T8 J:FG40T8

FIG.93
(F4045450)

Item No	Part No.	Mark	Description		Req'd	Remarks : Serial No.
39	NO PART NO.	#*	CUP	ｶｯﾌﾟ	1	A,C,E
40	NO PART NO.	#*	ROD	ﾛｯﾄﾞ	1	A,C,E
41	NO PART NO.	#*	VALVE	ﾊﾞﾙﾌﾞ	1	A,C,E
42	NO PART NO.	#*	SPRING	ｽﾌﾟﾘﾝｸﾞ	1	A,C,E
43	NO PART NO.	#*	CASE	ｹｰｽ	1	A,C,E
44	NO PART NO.	#*	RING	ﾘﾝｸﾞ	1	A,C,E
A7	224W5-32521		GUIDE-SUB-ASSY	ｶﾞｲﾄﾞｻﾌﾞｱｯｾﾝ	1	A,C,E
						INC.45-47
45	NO PART NO.	#*	GUIDE	ｶﾞｲﾄﾞ	1	A,C,E
46	NO PART NO.	#*	CUP	ｶｯﾌﾟ	1	A,C,E
47	NO PART NO.	#*	CUP	ｶｯﾌﾟ	1	A,C,E
48	224W5-32451	*	O-RING	Oﾘﾝｸﾞ	1	A,C,E
49	224W5-32461	*	RING,SNAP	ｽﾅｯﾌﾟﾘﾝｸﾞ	1	A,C,E
50	522A2-18281	*	O-RING	Oﾘﾝｸﾞ	2	A,C,E
51	224W5-32471	*	BOOT	ﾌﾞｰﾂ	1	A,C,E
52	522A2-18321	*	GASKET	ｶﾞｽｹｯﾄ	2	A,C,E
53	522A2-18331	*	RING,SNAP	ｽﾅｯﾌﾟﾘﾝｸﾞ	1	A,C,E
54	522A2-18361	*	GASKET	ｶﾞｽｹｯﾄ	2	A,C,E
55	522A2-18371	*	BALL	ﾎﾞｰﾙ	1	A,C,E
56	224W5-32481	*	RING,SNAP	ｽﾅｯﾌﾟﾘﾝｸﾞ	1	A,C,E
57	522A2-18391	*	BALL	ﾎﾞｰﾙ	1	A,C,E
58	224W5-32491	*	PIN	ﾋﾟﾝ	1	A,C,E
K1	224W5-32501		KIT,OVERHAUL	ｵｰﾊﾞｰﾎｰﾙｷｯﾄ	1	A,C,E
						INC.27-58

FIG.94 BRAKE LEVER

(F4045510) ブレーキレバー

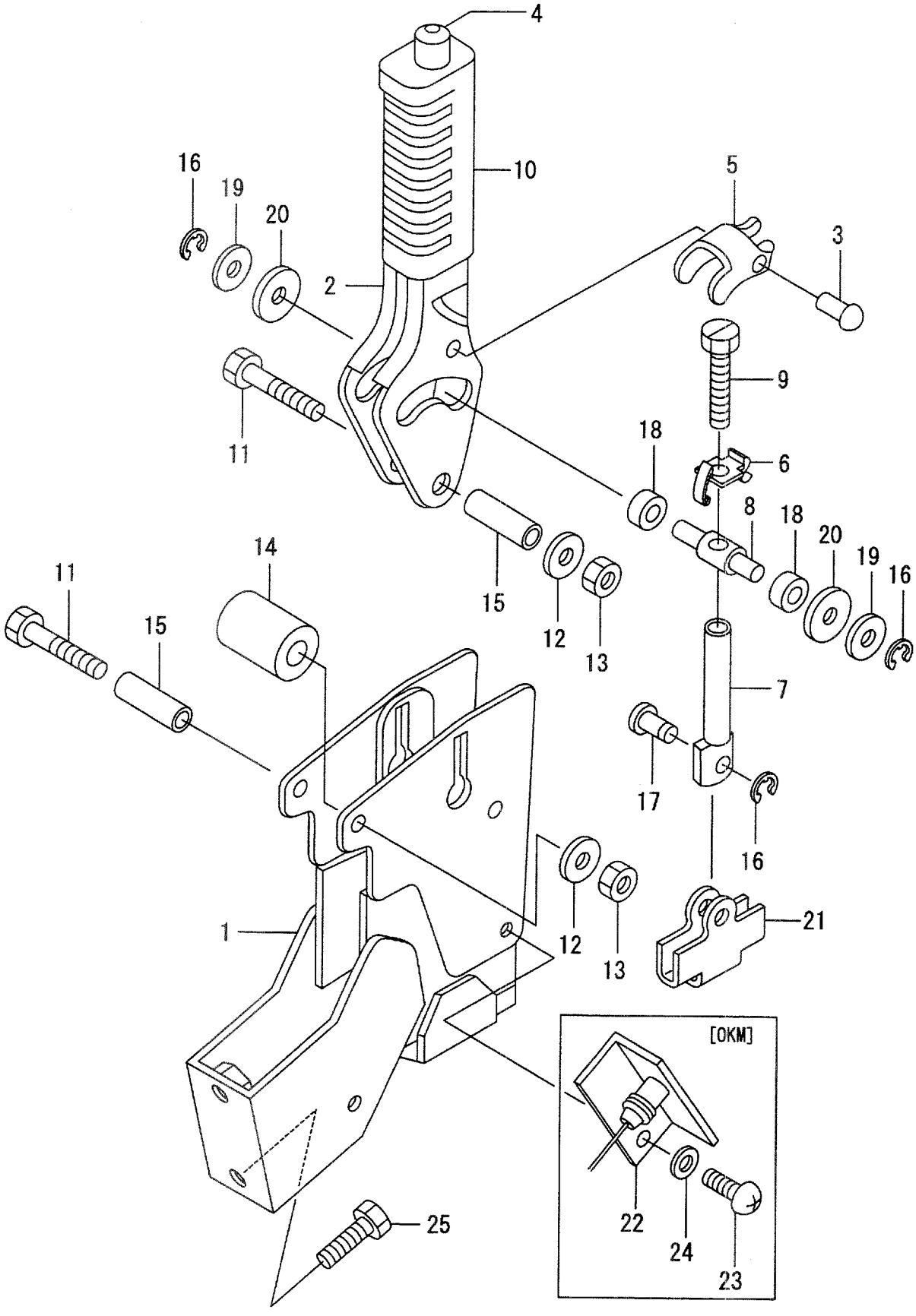

A:FD35C8 D:FD40T8 G:FD50T8 K:FG45T8
B:FD35T8 E:FD45C8 H:FG35T8 L:FG50T8
C:FD40C8 F:FD45T8 J:FG40T8

FIG.94
(F4045510)

Item No	Part No.	Mark	Description		Req'd	Remarks : Serial No.
A1	235C5-50101		LEVER-ASSY,BRAKE	ﾌﾞﾚｰｷﾚﾊﾞｰｱｯｾﾝ	1	INC.1-21
-	535C6-20101		LEVER-ASSY,BRAKE	ﾌﾞﾚｰｷﾚﾊﾞｰｱｯｾﾝ	1	[OKM] INC.1-24
1	235C5-55001		BRACKET	ﾌﾞﾗｹｯﾄ	1	
2	230C5-55011		LEVER	ﾚﾊﾞｰ	1	
-	530C6-22171		LEVER	ﾚﾊﾞｰ	1	[OKM]
3	230C5-55021		PIN	ﾋﾟﾝ	1	
4	230C5-55031		ROD,RELEASE	ﾛｯﾄﾞ	1	
5	230C5-55041		PLATE,LOCK	ﾌﾟﾚｰﾄ	1	
6	230C5-55051		PLATE,TENTION	ﾌﾟﾚｰﾄ	1	
7	230C5-55061		ROD	ﾛｯﾄﾞ	1	
8	230C5-55071		PIN	ﾋﾟﾝ	1	
9	230C5-55081		BOLT	ﾎﾞﾙﾄ	1	
10	214A5-53001		GRIP	ｸﾞﾘｯﾌﾟ	1	
11	01100-08050		BOLT	ﾎﾞﾙﾄ	2	
12	02010-00008		WASHER	ﾜｯｼｬ	2	
13	01400-00008		NUT	ﾅｯﾄ	2	
14	222A5-52111		STOPPER	ｽﾄｯﾊﾟ	1	
15	230C5-55101		COLLAR	ｶﾗｰ	2	
16	214A5-52131		E-RING	Eﾘﾝｸﾞ	3	
17	230C5-55111		PIN	ﾋﾟﾝ	1	
18	230C5-55121		ROLLER	ﾛｰﾗ	2	
19	214A5-52121		WASHER	ﾜｯｼｬ	2	
20	214A5-52241		WASHER	ﾜｯｼｬ	2	
21	27415-52151		BRACKET	ﾌﾞﾗｹｯﾄ	1	
22	214A5-53031		SWITCH	ｽｲｯﾁ	1	[OKM]
23	530C6-22181		SCREW	ｽｸﾘｭ	1	[OKM]
24	02000-00006		WASHER	ﾜｯｼｬ	1	[OKM]
25	01186-10025		BOLT	ﾎﾞﾙﾄ	2	
-	01186-10035		BOLT	ﾎﾞﾙﾄ	2	[OKM]

FIG.95 FRAME

(F4046110) フレーム

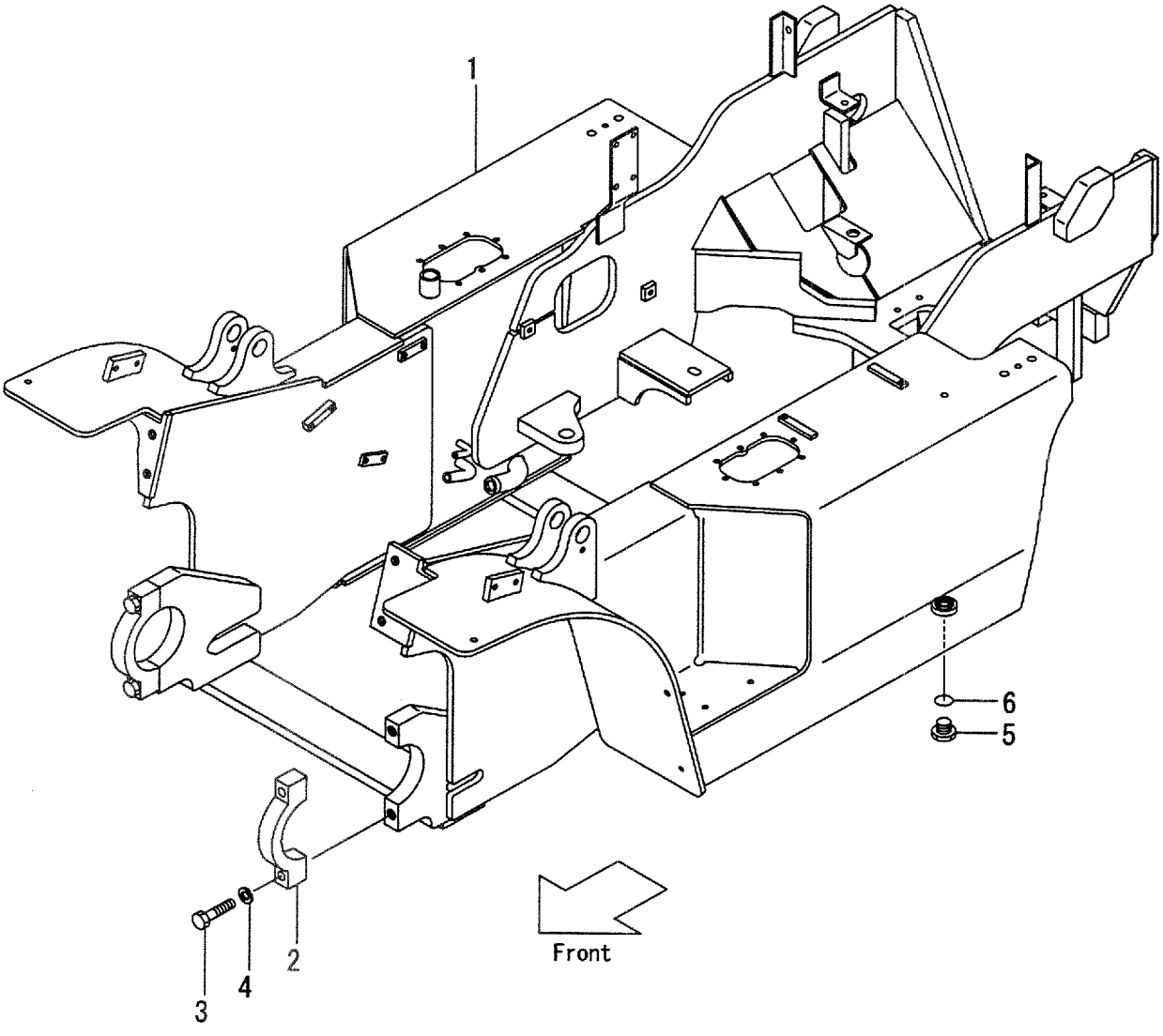

A:FD35C8 D:FD40T8 G:FD50T8 K:FG45T8
B:FD35T8 E:FD45C8 H:FG35T8 L:FG50T8
C:FD40C8 F:FD45T8 J:FG40T8

FIG.95
(F4046110)

Item No	Part No.	Mark	Description		Req'd	Remarks : Serial No.
1	NO PART NO.	#	FRAME	ﾌﾚｰﾑ	1	
2	23916-12422		CAP,MAST-SUPPORT	ｷｬｯﾌﾟ	2	
3	01100-20085		BOLT	ﾎﾞﾙﾄ	4	
4	02010-00020		WASHER	ﾜｯｼｬ	4	
5	21237-52051		PLUG,DRAIN	ﾌﾟﾗｸﾞ	2	
6	21237-52062		PACKING	ﾊﾟｯｷﾝｸﾞ	2	
7	62014-12271	+	PIN,SNAP	ﾋﾟﾝ	1	C,D,E,F,G,J,K,L [RW][OBT/RW]

FIG.96 OIL TANK

(F4046120) オイルタンク

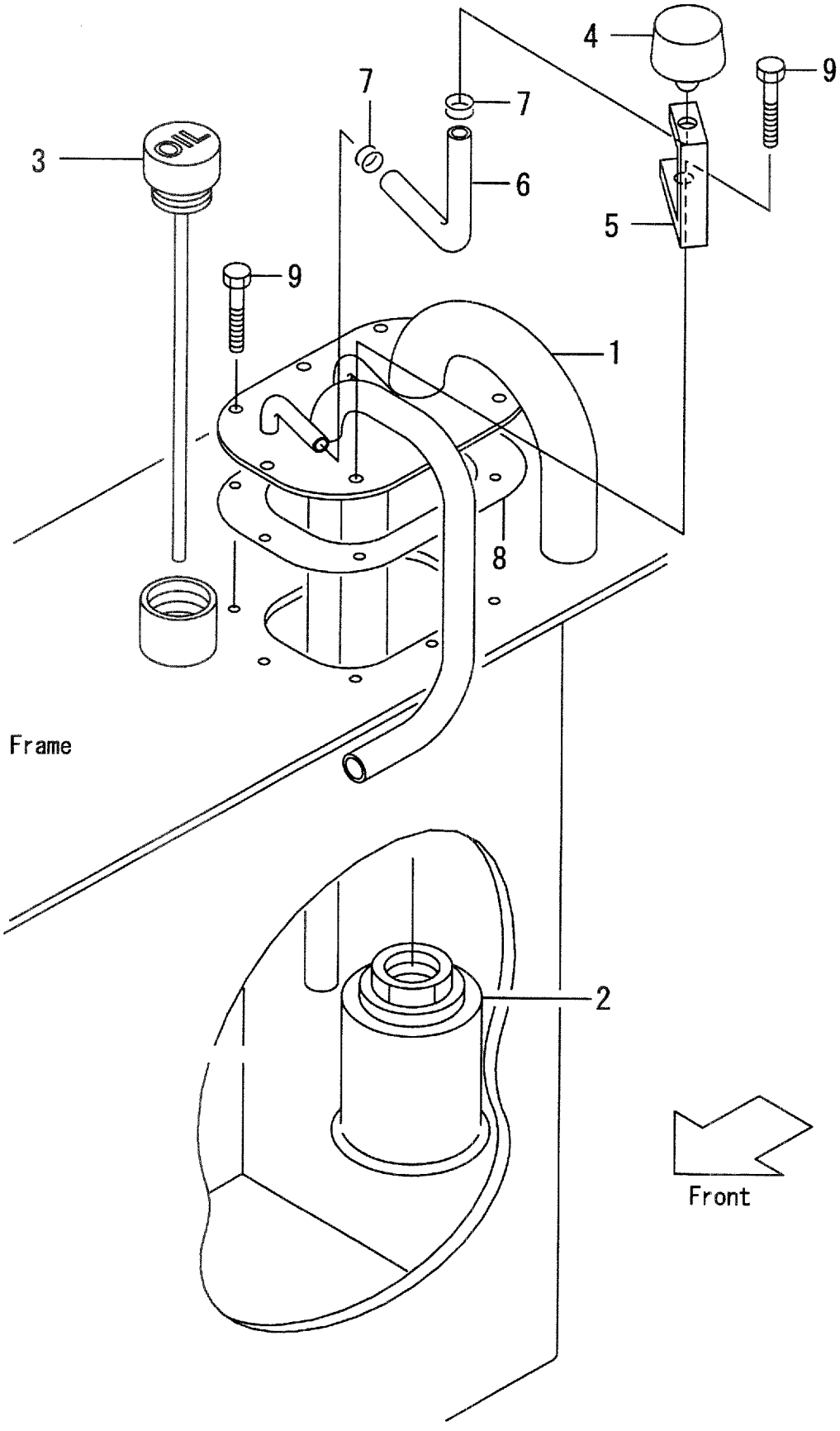

A:FD35C8 D:FD40T8 G:FD50T8 K:FG45T8
B:FD35T8 E:FD45C8 H:FG35T8 L:FG50T8
C:FD40C8 F:FD45T8 J:FG40T8

FIG.96
(F4046120)

Item No	Part No.	Mark	Description		Req'd	Remarks : Serial No.
A1	235C7-50201		PIPE-ASSY,SUCTION	ｻｸｼｮﾝﾊﾟｲﾌﾟｱｯｾﾝ	1	INC.1,2
1	235C7-52001		PIPE	ﾊﾟｲﾌﾟ	1	
2	25957-52031		FILTER,SUCTION	ﾌｨﾙﾀ	1	
3	234A7-52101		CAP	ｷｬｯﾌﾟ	1	
4	216G7-52201		BREATHER,AIR	ﾌﾞﾘｰｻﾞ	1	
5	216G7-52121		BRACKET	ﾌﾞﾗｹｯﾄ	1	
6	04710-04016		HOSE	ﾎｰｽ	1	
7	04914-00019		CLIP	ｸﾘｯﾌﾟ	2	
8	216G2-22202		PACKING	ﾊﾟｯｷﾝｸﾞ	1	
9	229F2-22151		BOLT	ﾎﾞﾙﾄ	8	A,B,C,D,E,F:1-110 G:1-101 H,J,K,L:1-102
-	229F2-22151		BOLT	ﾎﾞﾙﾄ	6	A,B,C,D,E,F:111- G:102- H,J,K,L:103-
-	229F2-22161		BOLT	ﾎﾞﾙﾄ	2	A,B,C,D,E,F:111- G:102- H,J,K,L:103-

FIG.97 FUEL TANK

(F4046130) フューエルタンク

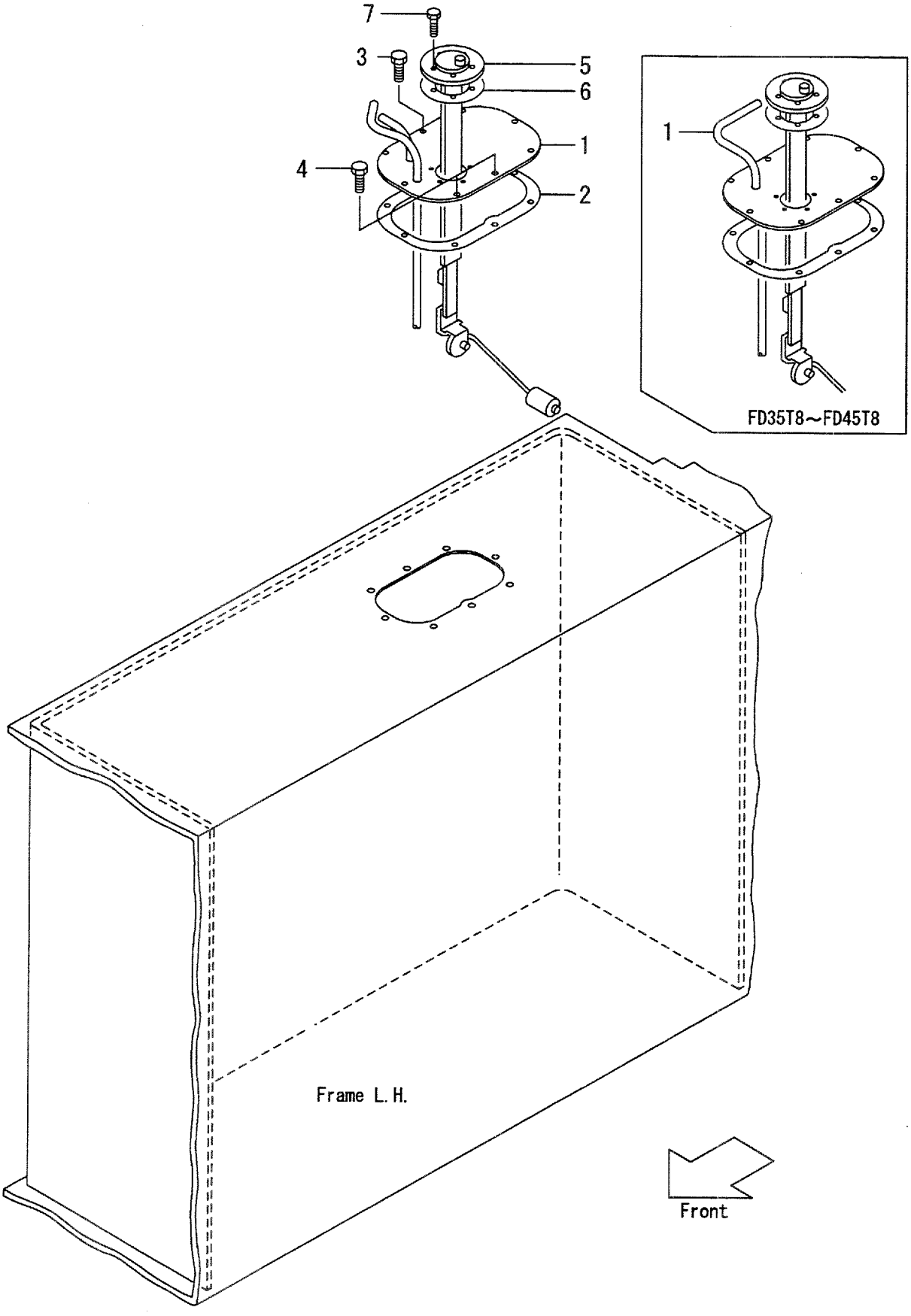

A:FD35C8 D:FD40T8 G:FD50T8 K:FG45T8
B:FD35T8 E:FD45C8 H:FG35T8 L:FG50T8
C:FD40C8 F:FD45T8 J:FG40T8

FIG.97
(F4046130)

Item No	Part No.	Mark	Description		Req'd	Remarks : Serial No.
1	235C2-20051		PLATE	ﾌﾟﾚｰﾄ	1	A,B,C,D,E,F,G
-	235L2-20011		PLATE	ﾌﾟﾚｰﾄ	1	H,J,K,L
-	535E2-72001		PLATE	ﾌﾟﾚｰﾄ	1	B,D,F,G [EXA]
-	535L0-52051		PLATE	ﾌﾟﾚｰﾄ	1	H,J,K:1-308 L:1-128 [LPO]
-	533A0-52002		PLATE	ﾌﾟﾚｰﾄ	1	H,J,K:309- L:129- [LPO]
2	216G2-22202		PACKING	ﾊﾟｯｷﾝｸﾞ	1	
3	229F2-22151		BOLT	ﾎﾞﾙﾄ	6	
4	229F2-22151		BOLT	ﾎﾞﾙﾄ	2	A,B,C,D,E,F,G
-	229F2-22161		BOLT	ﾎﾞﾙﾄ	2	H,J,K,L
-	229F2-22161		BOLT	ﾎﾞﾙﾄ	1	H,J,K,L [LPO]
-	01185-08012		BOLT	ﾎﾞﾙﾄ	1	H,J,K:1-308 L:1-128 [LPO]
-	229F2-22161		BOLT	ﾎﾞﾙﾄ	1	H,J,K:309- L:209- [LPO]
5	224W2-22001		UNIT,SENDING	ｾﾝﾃﾞｨﾝｸﾞﾕﾆｯﾄ	1	
-	524W7-12001		UNIT,SENDING	ｾﾝﾃﾞｨﾝｸﾞﾕﾆｯﾄ	1	A,B,C,D,E,F,G [OKM]
6	23642-20043		GASKET	ｶﾞｽｹｯﾄ	1	A,B,C,D,E,F:1-414 G:1-156 H,J,K:1-145 H,J,K,L L:1-103
-	229F2-22071		GASKET	ｶﾞｽｹｯﾄ	1	A,B,C,D,E,F:415- G:157- H,J,K:146- L:104-
7	229F2-22171		BOLT	ﾎﾞﾙﾄ	5	

FIG.98 BALANCE WEIGHT

(F4046310) ﾊﾞﾗﾝｽｳｴｲﾄ

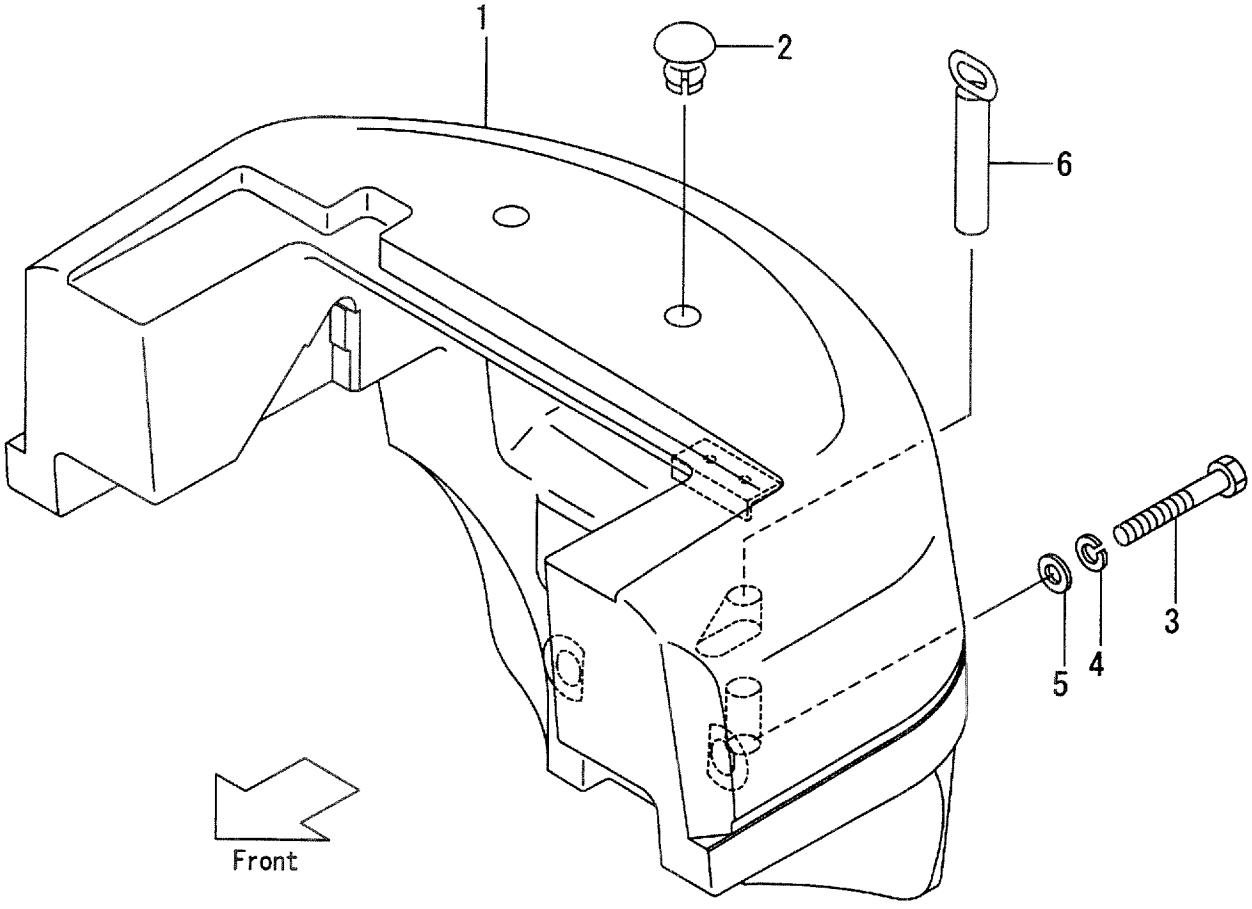

A:FD35C8 D:FD40T8 G:FD50T8 K:FG45T8
B:FD35T8 E:FD45C8 H:FG35T8 L:FG50T8
C:FD40C8 F:FD45T8 J:FG40T8

FIG.98
(F4046310)

Item No	Part No.	Mark	Description		Req'd	Remarks : Serial No.
1	NO PART NO.		WEIGHT,BALANCE	ｳｴｲﾄ	1	
2	216G6-32101		CAP	ｷｬｯﾌﾟ	2	
3	01110-30200		BOLT	ﾎﾞﾙﾄ	2	
4	02010-00030		WASHER	ﾜｯｼｬ	2	
5	22216-30051		WASHER	ﾜｯｼｬ	2	
6	24356-32171		PIN,DROP	ﾋﾟﾝ	1	(WITHOUT RW)

FIG.99 FRONT GUARD

(F4046410) フロントガード

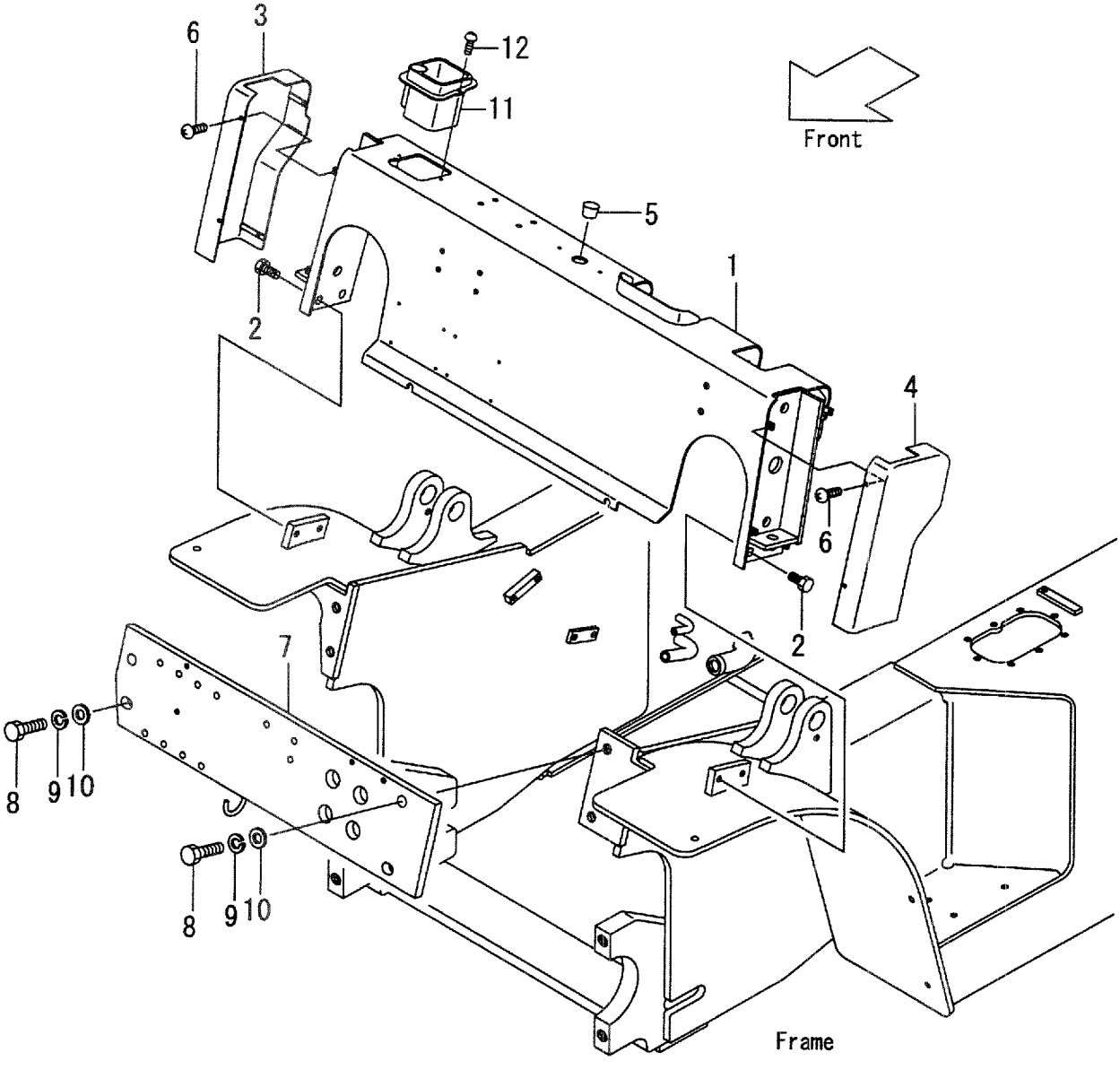

A:FD35C8 D:FD40T8 G:FD50T8 K:FG45T8
B:FD35T8 E:FD45C8 H:FG35T8 L:FG50T8
C:FD40C8 F:FD45T8 J:FG40T8

FIG.99
(F4046410)

Item No	Part No.	Mark	Description		Req'd	Remarks : Serial No.
1	235C6-40011		GUARD,FRONT	ｶﾞｰﾄﾞ	1	
2	01186-12025		BOLT	ﾎﾞﾙﾄ	4	
3	235C6-42101		COVER,RH,SIDE	ｶﾊﾞｰ	1	
4	235C6-42111		COVER,LH,SIDE	ｶﾊﾞｰ	1	
5	514A5-12701		PLUG	ﾌﾟﾗｸﾞ	1	
6	214A6-42252		SCREW	ｽｸﾘｭ	8	
7	235C6-40101		PLATE,FRONT	ﾌﾟﾚｰﾄ	1	
8	224W6-42391		BOLT	ﾎﾞﾙﾄ	4	
-	01103-20045		BOLT	ﾎﾞﾙﾄ	4	
9	02011-00020		WASHER	ﾜｯｼｬ	4	
10	02000-00020		WASHER	ﾜｯｼｬ	4	
11	230C9-32001		TRAY	ﾄﾚｰ	1	[TPM](WITHOUT AM)
12	214A6-42252		SCREW	ｽｸﾘｭ	2	[TPM](WITHOUT AM)
13	229F6-42201	+	SEAL	ｼｰﾙ	2	

FIG.100 BONNET

(F4046420) ﾎﾞﾝﾈｯﾄ

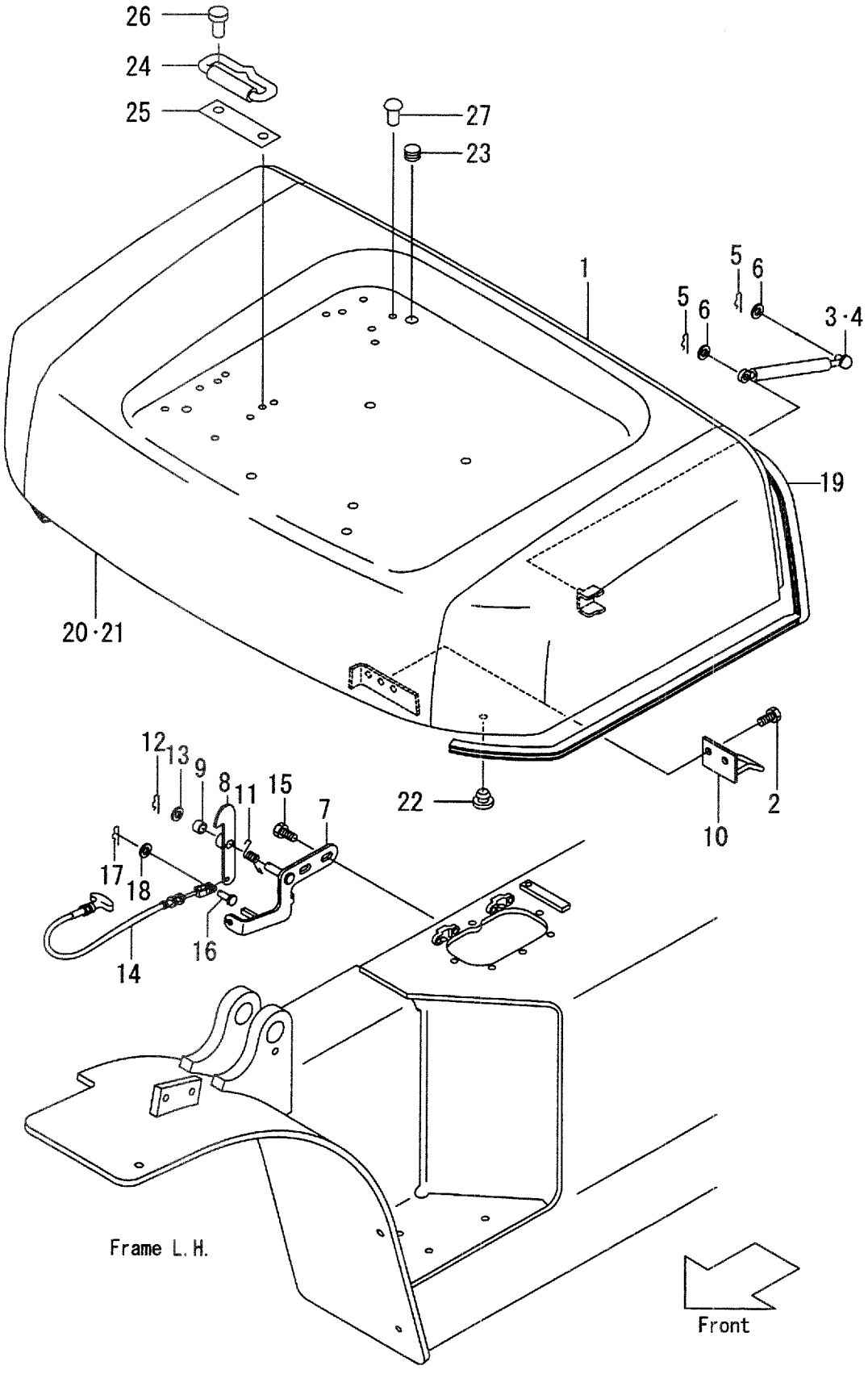

A:FD35C8 D:FD40T8 G:FD50T8 K:FG45T8
B:FD35T8 E:FD45C8 H:FG35T8 L:FG50T8
C:FD40C8 F:FD45T8 J:FG40T8

FIG.100
(F4046420)

Item No	Part No.	Mark	Description		Req'd	Remarks : Serial No.
1	230C6-40501		BONNET	ﾎﾞﾝﾈｯﾄ	1	
-	535C4-90011		BONNET	ﾎﾞﾝﾈｯﾄ	1	[HGL]
2	01183-08016		BOLT	ﾎﾞﾙﾄ	2	
3	230C6-43001		SPRING,GAS	ｽﾌﾟﾘﾝｸﾞ	1	A,B,C,D,E,F:1-222 G:1-132 H,J,K:1-107 L:1-102
-	235C6-42301		SPRING,GAS	ｽﾌﾟﾘﾝｸﾞ	1	A,B,C,D,E,F:223- G:133- H,J,K:108- L:103-
4	230C6-43001		SPRING,GAS	ｽﾌﾟﾘﾝｸﾞ	1	A,B,C,D,E,F:1-222 G:1-132 H,J,K:1-107 L:1-102
-	216G6-43501		SPRING,GAS	ｽﾌﾟﾘﾝｸﾞ	1	A,B,C,D,E,F:223- G:133- H,J,K:108- L:103-
-	530C3-82201		SPRING,GAS	ｽﾌﾟﾘﾝｸﾞ	1	A,B,C,D,E,F:1-222 G:1-132 H,J,K:1-107 L:1-102 [EXD][EXE][EXN]
-	535C2-60401		SPRING,GAS	ｽﾌﾟﾘﾝｸﾞ	1	A,B,C,D,E,F:223- G:133- H,J,K:108- L:103- [EXD][EXE][EXN]
5	216H3-92171		PIN,SNAP	ﾋﾟﾝ	4	
6	02000-00008		WASHER	ﾜｯｼｬ	4	
A1	216G6-41001		CATCH-ASSY,BONNET	ﾎﾞﾝﾈｯﾄｷｬｯﾁｱｯｾﾝ	1	INC.7-13
7	216G6-42351		BRACKET	ﾌﾞﾗｹｯﾄ	1	
8	216G6-42401		LATCH	ﾗｯﾁ	1	
9	23655-22101		BUSHING	ﾌﾞｯｼﾝｸﾞ	1	
10	216G6-42451		HOOK	ﾌｯｸ	1	
11	216G6-42481		SPRING	ｽﾌﾟﾘﾝｸﾞ	1	
12	216H5-42141		PIN,SNAP	ﾋﾟﾝ	1	
13	02000-00010		WASHER	ﾜｯｼｬ	1	
14	230C6-42401		WIRE	ﾜｲﾔ	1	
15	01185-08016		BOLT	ﾎﾞﾙﾄ	2	
16	02262-06015		PIN,CLEVIS	ﾋﾟﾝ	1	
17	216G5-22081		PIN,SNAP	ﾋﾟﾝ	1	
18	02000-00006		WASHER	ﾜｯｼｬ	1	
19	230C6-42411		RUBBER	ﾗﾊﾞｰ	1	
20	230C6-42421		INSULATOR	ｲﾝｼｭﾚｰﾀ	1	
21	216G6-42541		CLIP	ｸﾘｯﾌﾟ	6	
22	23456-42181		STOPPER	ｽﾄｯﾊﾟ	2	
23	221A2-42031		GROMMET	ｸﾞﾛﾒｯﾄ	1	
24	25599-32001		BINDER	ﾊﾞｲﾝﾀﾞ	1	

FIG.100 BONNET

(F4046420) ﾎﾞﾝﾈｯﾄ

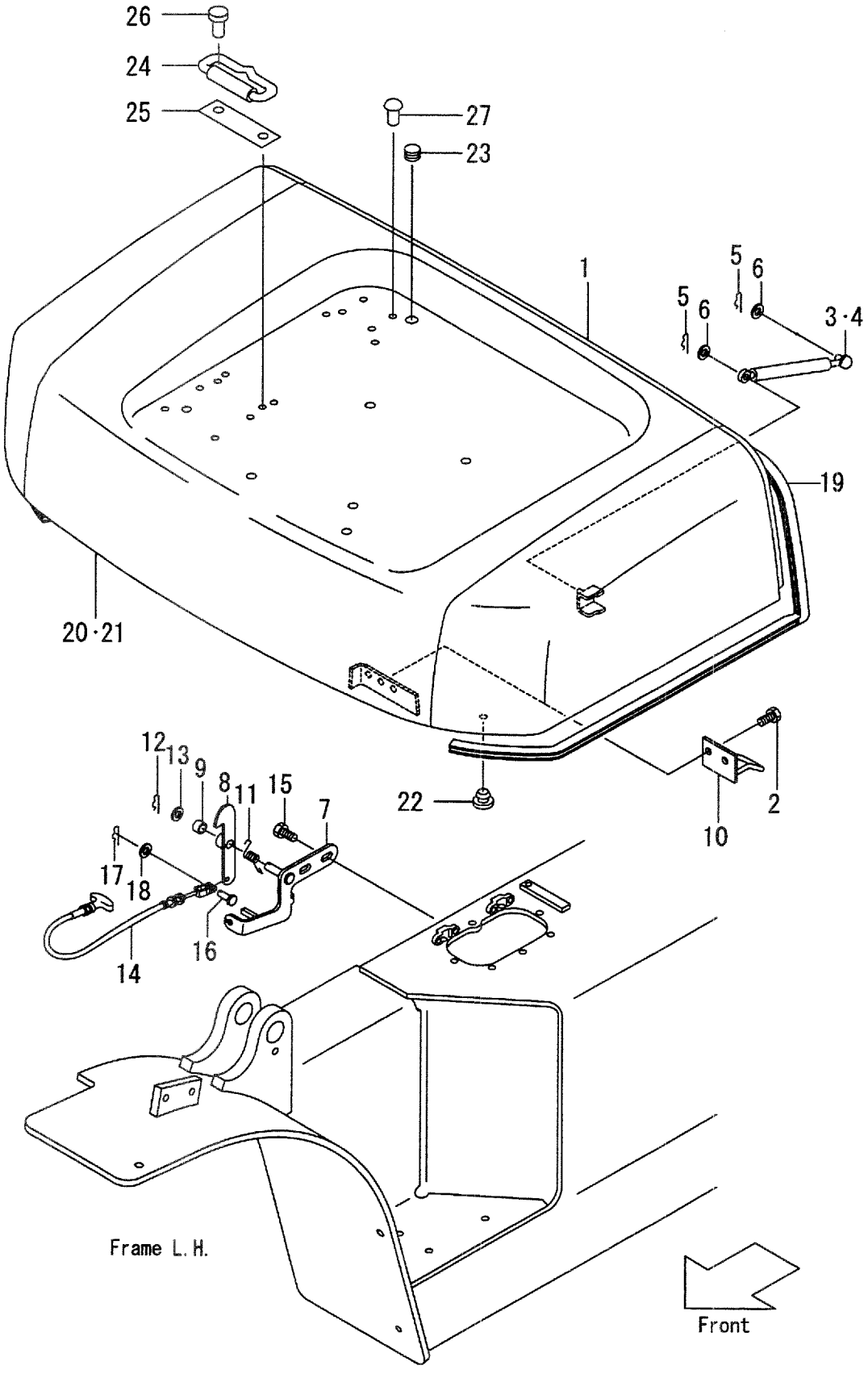

A:FD35C8 D:FD40T8 G:FD50T8 K:FG45T8
B:FD35T8 E:FD45C8 H:FG35T8 L:FG50T8
C:FD40C8 F:FD45T8 J:FG40T8

FIG.100
(F4046420)

Item No	Part No.	Mark	Description		Req'd	Remarks : Serial No.
25	25599-32021		SHEET	シート	1	
26	22256-42001		RIVET	リベット	2	
27	25596-42361		RIVET	リベット	4	

FIG.101 RADIATOR COVER

(F4046430) ﾗｼﾞｴｰﾀｶﾊﾞｰ

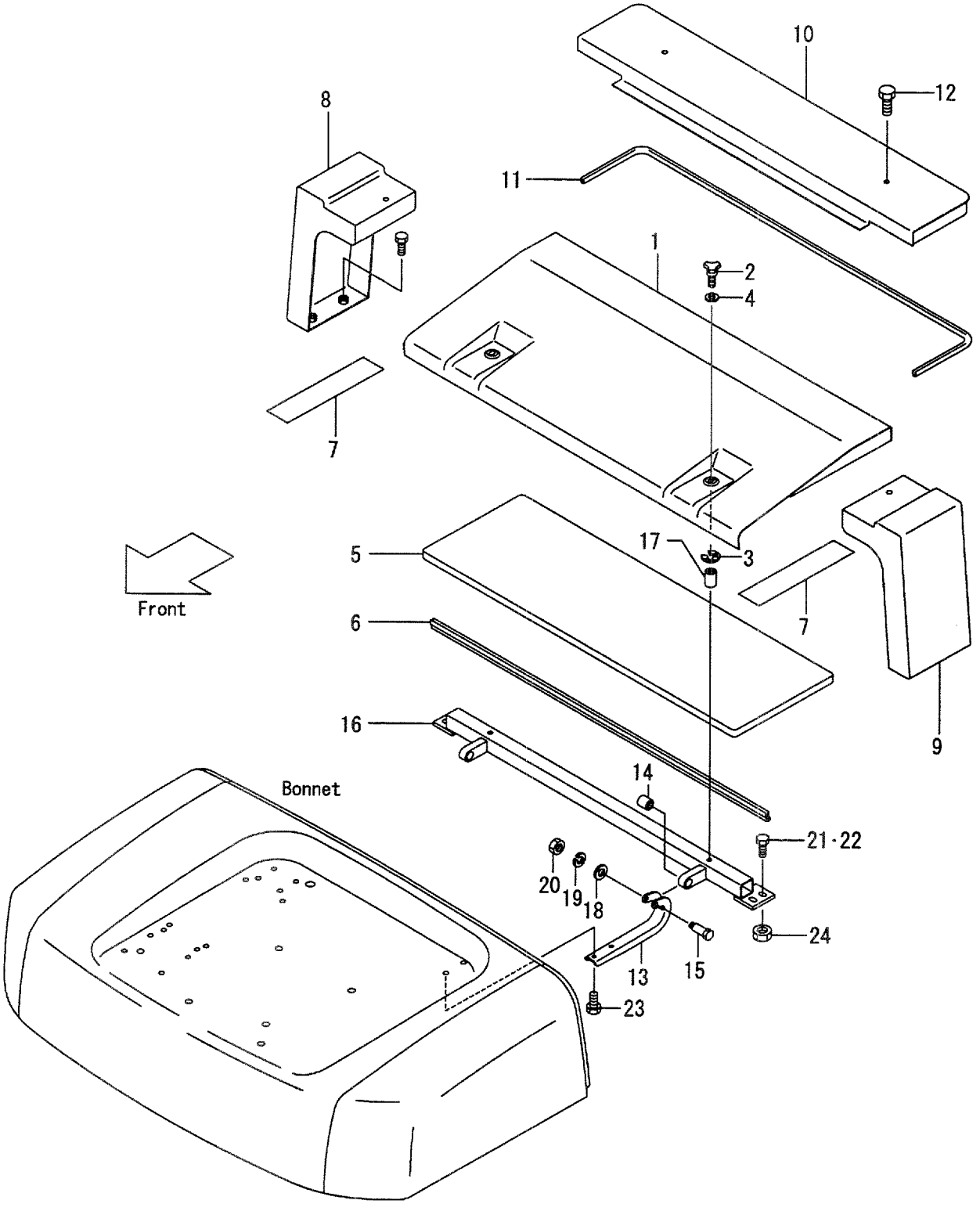

A:FD35C8 D:FD40T8 G:FD50T8 K:FG45T8
B:FD35T8 E:FD45C8 H:FG35T8 L:FG50T8
C:FD40C8 F:FD45T8 J:FG40T8

FIG.101
(F4046430)

Item No	Part No.	Mark	Description		Req'd	Remarks : Serial No.
1	235C6-42151		COVER	ｶﾊﾞｰ	1	
-	535L0-52001		COVER	ｶﾊﾞｰ	1	H,J,K,L [LPG][LPO][LPG/EXE] [LPO/EXE]
-	535C1-92191		COVER	ｶﾊﾞｰ	1	C,D,E,F,J,K [RW](OLD PART)
-	535C1-92192		COVER	ｶﾊﾞｰ	1	C,D,E,F,J,K [RW](NEW PART)
-	235C6-42151		COVER	ｶﾊﾞｰ	1	G:1-554 L [RW](OLD PART)
-	535H1-92151		COVER	ｶﾊﾞｰ	1	G:555- L [RW](NEW PART)
-	535C3-92101		COVER	ｶﾊﾞｰ	1	A,B,C,D,E,F,H,J,K [HC][HC/EXE]
-	535H3-92101		COVER	ｶﾊﾞｰ	1	G,L [HC][HC/EXE]
-	535C4-12151		COVER	ｶﾊﾞｰ	1	A,B,C,D,E,F,G [CRC][CRH][XRO][CRC/EXE] [CRH/EXE][CRO/EXE]
2	222A6-42451		BOLT	ﾎﾞﾙﾄ	2	
-	01181-08016		BOLT	ﾎﾞﾙﾄ	2	[EXE]
-	01181-08016		BOLT	ﾎﾞﾙﾄ	2	H,J,K,L [LPG/EXE][LPO/EXE][HC/EXE]
-	01181-08016		BOLT	ﾎﾞﾙﾄ	2	H,J,K,L [CRH/EXE][CRO/EXE] [CRC/EXE]
-	01181-08016		BOLT	ﾎﾞﾙﾄ	2	G,L [TUE/EXE]
3	222A6-42461		E-RING	Eﾘﾝｸﾞ	2	(WITHOUT EXE)
-	222A6-42461		E-RING	Eﾘﾝｸﾞ	2	H,J,K,L [LPG/EXE][LPO/EXE][HC/EXE]
-	222A6-42461		E-RING	Eﾘﾝｸﾞ	2	H,J,K,L [CRC/EXE][CRH/EXE] [CRO/EXE][TUE/EXE]
4	02000-00008		WASHER	ﾜｯｼｬ	2	(WITHOUT EXE)
-	02000-00008		WASHER	ﾜｯｼｬ	2	H,J,K,L [LPG/EXE][LPO/EXE][HC/EXE]
-	02000-00008		WASHER	ﾜｯｼｬ	2	H,J,K,L [CRC/EXE][CRH/EXE] [CRO/EXE][TUE/EXE]
5	235C6-42161		RUBBER	ﾗﾊﾞｰ	1	
-	535C1-92181		RUBBER	ﾗﾊﾞｰ	1	C,D,E,F,J,K [RW]
-	535C3-92111		RUBBER	ﾗﾊﾞｰ	1	A,B,C,D,E,F,H,J,K [HC][HC/EXE]
-	535H3-92111		RUBBER	ﾗﾊﾞｰ	1	G,L [HC][HC/EXE]

FIG.101 RADIATOR COVER

(F4046430) ﾗｼﾞｴｰﾀｶﾊﾞｰ

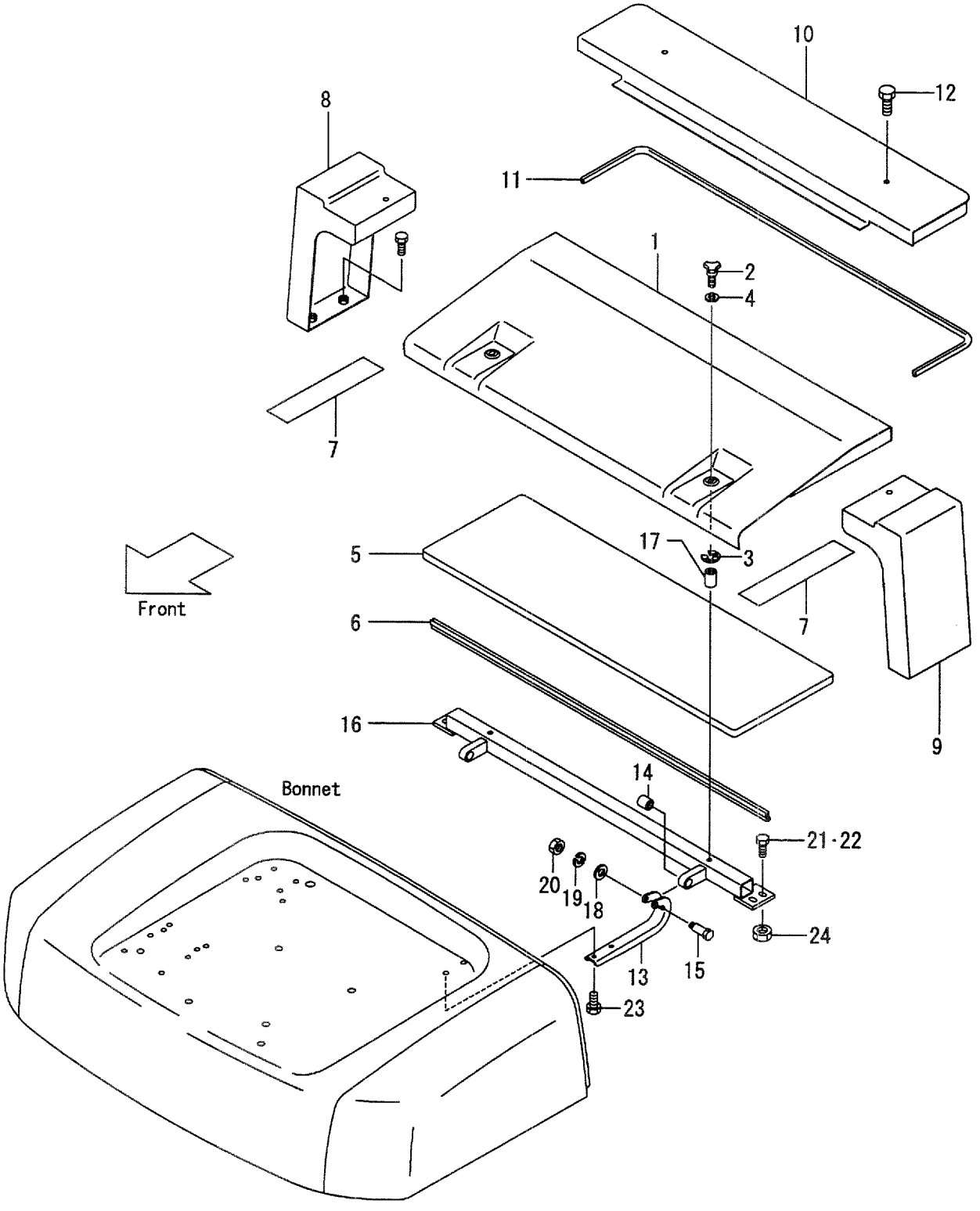

A:FD35C8 D:FD40T8 G:FD50T8 K:FG45T8
B:FD35T8 E:FD45C8 H:FG35T8 L:FG50T8
C:FD40C8 F:FD45T8 J:FG40T8

FIG.101
(F4046430)

Item No	Part No.	Mark	Description		Req'd	Remarks : Serial No.
-	535C4-12161		RUBBER	ﾗﾊﾞｰ	1	A,B,C,D,E,F,G [CRC][CRH][CRO][CRC/EXE] [CRH/EXE][CRO/EXE]
6	235C6-42171		RUBBER	ﾗﾊﾞｰ	1	
7	234A6-43121		RUBBER	ﾗﾊﾞｰ	2	
8	235H6-40101		COVER,RH,SIDE	ｶﾊﾞｰ	1	G,L
9	235H6-40201		COVER,LH,SIDE	ｶﾊﾞｰ	1	G,L
10	235H6-40301		COVER,REAR	ｶﾊﾞｰ	1	G,L
-	535H1-92201		COVER,REAR	ｶﾊﾞｰ	1	G:1-554 L [RW](OLD PART)
-	535H1-92202		COVER,REAR	ｶﾊﾞｰ	1	G:555- L [RW](NEW PART)
-	535H0-82101		COVER,REAR	ｶﾊﾞｰ	1	G,L [TUE][TUE/EXE]
-	535H3-92121		COVER,REAR	ｶﾊﾞｰ	1	G,L [HC][HC/EXE]
11	235H6-42061		RUBBER	ﾗﾊﾞｰ	1	G,L
12	01183-10025		BOLT	ﾎﾞﾙﾄ	8	G,L
A1	235C6-40401		HINGE-ASSY	ﾋﾝｼﾞｱｯｾﾝ	1	A,B,C,D,E,F:1-722 G:1-202 H,J,K:1-174 L:1-106 INC.13-20
-	235C6-40402		HINGE-ASSY	ﾋﾝｼﾞｱｯｾﾝ	1	A,B,C,D,E,F:723- G:203- H,J,K:175- L:107- INC.13-20
13	216G6-42911		HINGE	ﾋﾝｼﾞ	2	
14	216G6-42921		BUSHING	ﾌﾞｯｼﾝｸﾞ	2	A,B,C,D,E,F:1-722 G:1-202 H,J,K:1-174 L:1-106
-	216G6-43601		BUSHING	ﾌﾞｯｼﾝｸﾞ	2	A,B,C,D,E,F:723- G:203- H,J,K:175- L:107-
15	216G6-42931		BOLT	ﾎﾞﾙﾄ	2	
16	235C6-42201		BRACKET	ﾌﾞﾗｹｯﾄ	1	A,B,C,D,E,F:1-722 G:1-202 H,J,K:1-174 L:1-106
-	235C6-42202		BRACKET	ﾌﾞﾗｹｯﾄ	1	A,B,C,D,E,F:723- G:203- H,J,K:175- L:107-

FIG.101 RADIATOR COVER

(F4046430) ﾗｼﾞｴｰﾀｶﾊﾞｰ

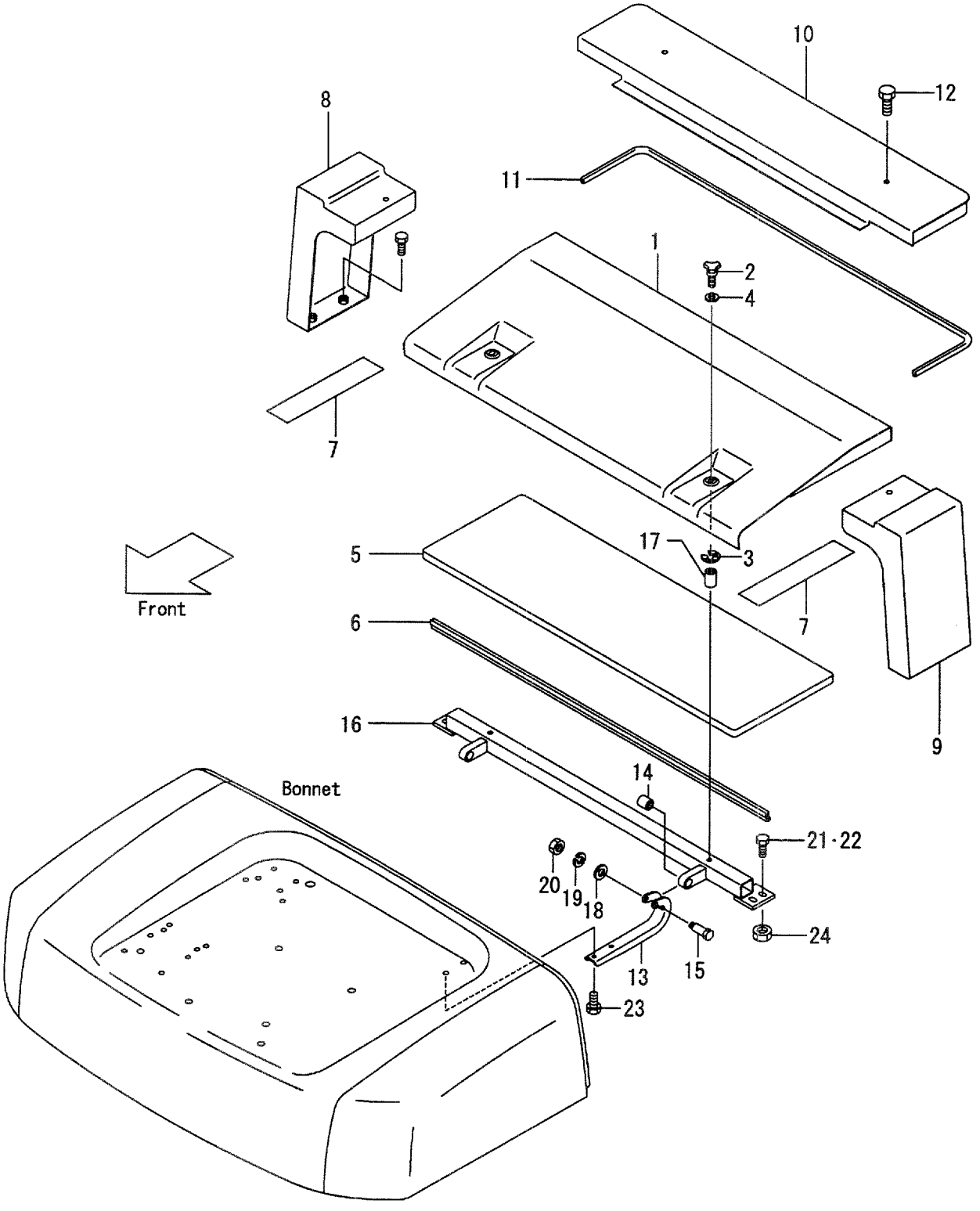

A:FD35C8 D:FD40T8 G:FD50T8 K:FG45T8
B:FD35T8 E:FD45C8 H:FG35T8 L:FG50T8
C:FD40C8 F:FD45T8 J:FG40T8

FIG.101
(F4046430)

Item No	Part No.	Mark	Description		Req'd	Remarks : Serial No.
17	514A5-12011		RIVET	ﾘﾍﾞｯﾄ	2	A,B,C,D,E,F:1-110 G:1-101 H,J,K,L:1-102
-	514A5-12011		RIVET	ﾘﾍﾞｯﾄ	3	A,B,C,D,E,F:111- G:102- H,J,K,L:103-
18	02000-00006		WASHER	ﾜｯｼｬ	2	
19	02010-00006		WASHER	ﾜｯｼｬ	2	
20	01400-00006		NUT	ﾅｯﾄ	2	
21	01186-10025		BOLT	ﾎﾞﾙﾄ	4	
-	01186-10025		BOLT	ﾎﾞﾙﾄ	2	H,J,K,L [LPG]
22	01186-10040		BOLT	ﾎﾞﾙﾄ	2	H,J,K,L [LPG]
23	01183-08016		BOLT	ﾎﾞﾙﾄ	4	
24	01400-00010		NUT	ﾅｯﾄ	2	H,J,K,L [LPG]
25	235C5-12151	+	RUBBER,RH	ﾗﾊﾞｰ	1	G,L
26	235C5-12161	+	RUBBER,LH	ﾗﾊﾞｰ	1	G,L
27	277H6-42681	+	EDGING	ｴｯｼﾞﾝｸﾞ	1	A,B,C,D,E,F,G [CRC][CRH][CRO][CRC/EXE] [CRH/EXE][CRO/EXE]
28	535C1-92131	+	COVER	ｶﾊﾞｰ	1	C,D,E,F,G,J,K,L [RW]
29	01183-08020	+	BOLT	ﾎﾞﾙﾄ	4	C,D,E,F,G,J,K,L [RW]

FIG.102 RADIATOR COVER [SCB001][AC][SCBAC][TUE/SCB]

(F4046450) ﾗｼﾞｴｰﾀｶﾊﾞｰ

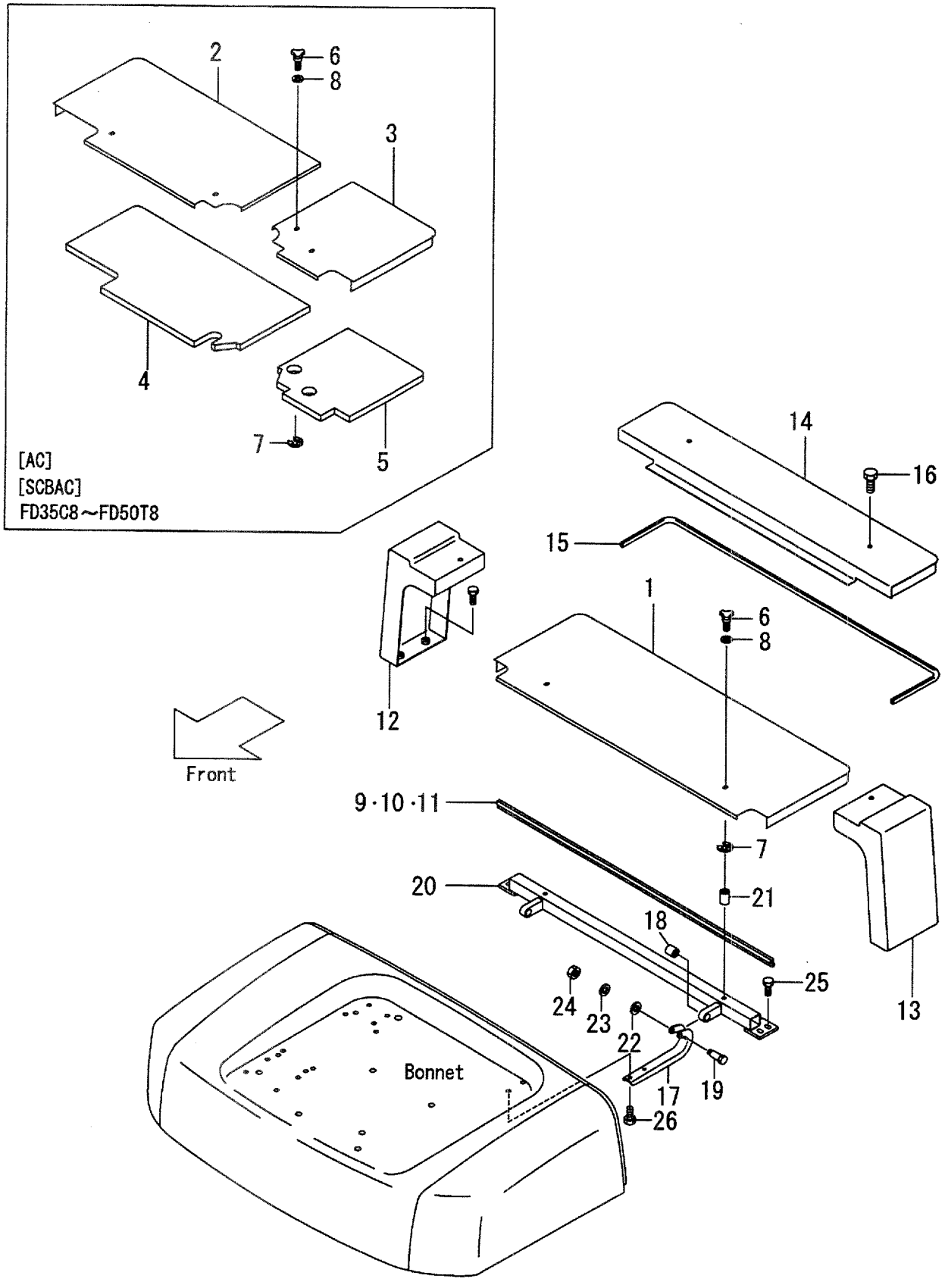

A:FD35C8 D:FD40T8 G:FD50T8 K:FG45T8
B:FD35T8 E:FD45C8 H:FG35T8 L:FG50T8
C:FD40C8 F:FD45T8 J:FG40T8

FIG.102
(F4046450)

Item No	Part No.	Mark	Description		Req'd	Remarks : Serial No.
1	535C5-30241		COVER	ｶﾊﾞｰ	1	[SCB001]
-	535C5-30241		COVER	ｶﾊﾞｰ	1	G,L [TUE/SCB]
2	535C7-62301		COVER,RH	ｶﾊﾞｰ	1	A,B,C,D,E,F,G [AC][SCBAC]
3	535C7-62331		COVER,LH	ｶﾊﾞｰ	1	A,B,C,D,E,F,G [AC][SCBAC]
4	535C7-62451		COVER,RH	ｶﾊﾞｰ	1	A,B,C,D,E,F,G [AC][SCBAC]
5	535C7-62461		COVER,LH	ｶﾊﾞｰ	1	A,B,C,D,E,F,G [AC][SCBAC]
6	222A6-42451		BOLT	ﾎﾞﾙﾄ	2	[SCB001]
-	222A6-42451		BOLT	ﾎﾞﾙﾄ	2	G,L [TUE/SCB]
-	222A6-42451		BOLT	ﾎﾞﾙﾄ	4	A,B,C,D,E,F,G [AC][SCBAC]
7	222A6-42461		E-RING	Eﾘﾝｸﾞ	2	[SCB001]
-	222A6-42461		E-RING	Eﾘﾝｸﾞ	2	G,L [TUE/SCB]
-	222A6-42461		E-RING	Eﾘﾝｸﾞ	4	A,B,C,D,E,F,G [AC][SCBAC]
8	02000-00008		WASHER	ﾜｯｼｬ	2	[SCB001]
-	02000-00008		WASHER	ﾜｯｼｬ	2	G,L [TUE/SCB]
-	02000-00008		WASHER	ﾜｯｼｬ	4	A,B,C,D,E,F,G [AC][SCBAC]
9	514A5-32011		RUBBER	ﾗﾊﾞｰ	1	[SCB001][AC][SCBAC] [TUE/SCB]
10	235C6-42171		RUBBER	ﾗﾊﾞｰ	1	[SCB001][AC][SCBAC] [TUE/SCB]
11	25902-12301		RUBBER	ﾗﾊﾞｰ	1	A,B,C,D,E,F,G [AC][SCBAC]
12	235H6-40101		COVER,SIDE,RH	ｶﾊﾞｰ	1	G,L [SCB001][TUE/SCB]
-	235H6-40101		COVER,SIDE,RH	ｶﾊﾞｰ	1	G [AC][SCBAC]
13	235H6-40201		COVER,SIDE,LH	ｶﾊﾞｰ	1	G,L [SCB001][TUE/SCB]
-	235H6-40201		COVER,SIDE,LH	ｶﾊﾞｰ	1	G [AC][SCBAC]
14	235H6-40301		COVER,REAR	ｶﾊﾞｰ	1	G,L [SCB001]
-	235H6-40301		COVER,REAR	ｶﾊﾞｰ	1	G [AC][SCBAC]
-	535H0-82101		COVER,REAR	ｶﾊﾞｰ	1	[TUE/SCB]
15	235H6-42061		RUBBER	ﾗﾊﾞｰ	1	G,L [SCB001][TUE/SCB]
-	235H6-42061		RUBBER	ﾗﾊﾞｰ	1	G [AC][SCBAC]

FIG.102 RADIATOR COVER [SCB001][AC][SCBAC][TUE/SCB]

(F4046450) ﾗｼﾞｴｰﾀｶﾊﾞｰ

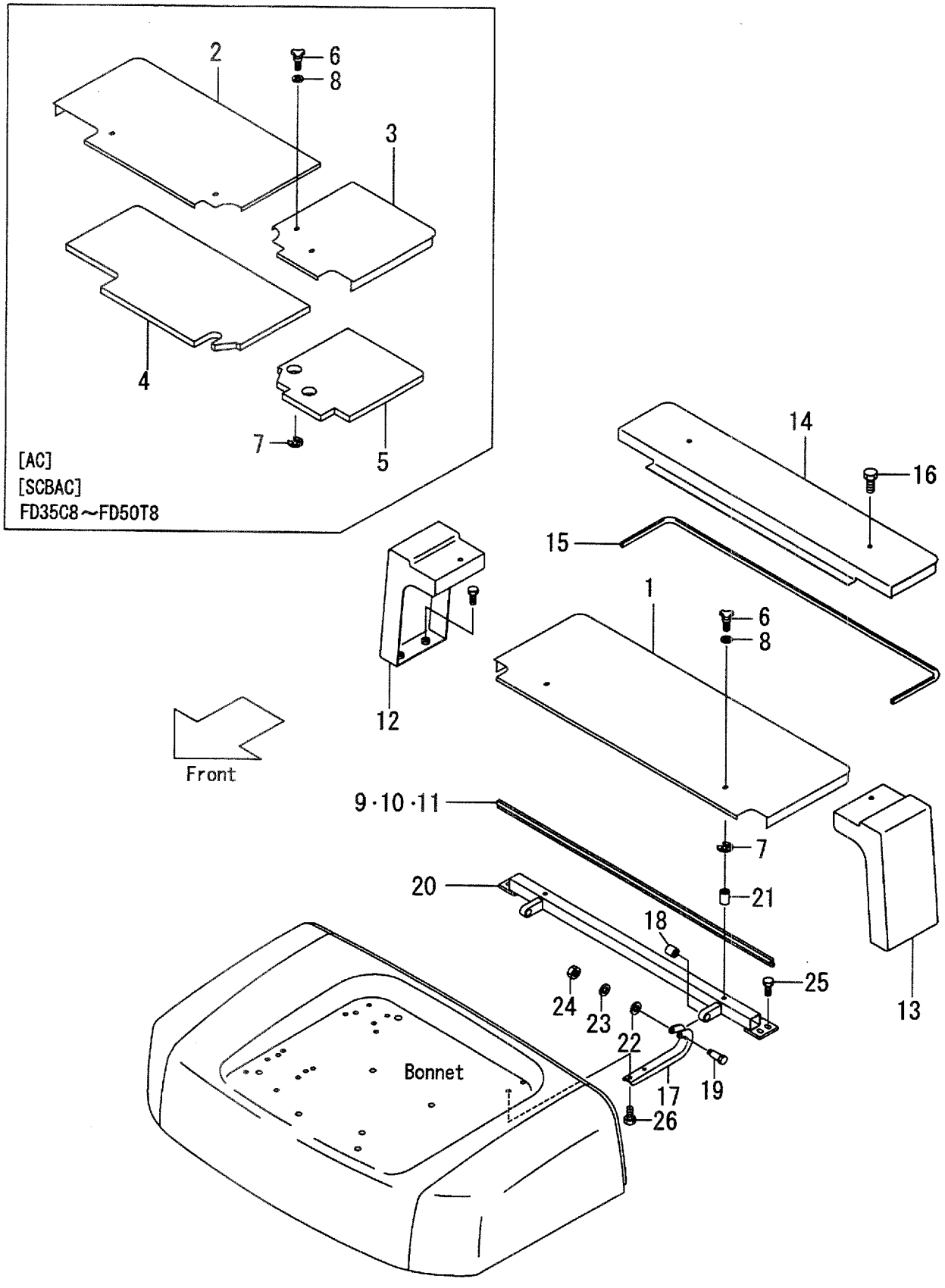

A:FD35C8 D:FD40T8 G:FD50T8 K:FG45T8
B:FD35T8 E:FD45C8 H:FG35T8 L:FG50T8
C:FD40C8 F:FD45T8 J:FG40T8

FIG.102
(F4046450)

Item No	Part No.	Mark	Description		Req'd	Remarks : Serial No.
16	01183-10025		BOLT	ﾎﾞﾙﾄ	8	G,L [SCB001][TUE/SCB]
-	01183-10025		BOLT	ﾎﾞﾙﾄ	8	G [AC][SCBAC]
A1	235C6-40401		HINGE-ASSY	ﾋﾝｼﾞｱｯｾﾝ	1	A,B,C,D,E,F:1-722 G:1-202 H,J,K:1-174 L:1-106 INC.17-24
-	235C6-40402		HINGE-ASSY	ﾋﾝｼﾞｱｯｾﾝ	1	A,B,C,D,E,F:723- G:203- H,J,K:175- L:107- INC.17-24
17	216G6-42911		HINGE	ﾋﾝｼﾞ	2	[SCB001][AC][SCBAC] [TUE/SCB]
18	216G6-42921		BUSHING	ﾌﾞｯｼﾝｸﾞ	2	A,B,C,D,E,F:1-722 G:1-202 H,J,K:1-174 L:1-106 [SCB001][AC][SCBAC] [TUE/SCB]
-	216G6-43601		BUSHING	ﾌﾞｯｼﾝｸﾞ	2	A,B,C,D,E,F:723- G:203- H,J,K:175- L:107- [SCB001][AC][SCBAC] [TUE/SCB]
19	216G6-42931		BOLT	ﾎﾞﾙﾄ	2	[SCB001][AC][SCBAC] [TUE/SCB]
20	235C6-42201		BRACKET	ﾌﾞﾗｹｯﾄ	1	A,B,C,D,E,F:1-722 G:1-202 H,J,K:1-174 L:1-106 [SCB001][AC][SCBAC] [TUE/SCB]
-	235C6-42202		BRACKET	ﾌﾞﾗｹｯﾄ	1	A,B,C,D,E,F:723- G:203- H,J,K:175- L:107- [SCB001][AC][SCBAC] [TUE/SCB]
21	514A5-12011		RIVET	ﾘﾍﾞｯﾄ	3	[SCB001][AC][SCBAC] [TUE/SCB]
22	02000-00006		WASHER	ﾜｯｼｬ	2	[SCB001][AC][SCBAC] [TUE/SCB]
23	02010-00006		WASHER	ﾜｯｼｬ	2	[SCB001][AC][SCBAC] [TUE/SCB]
24	01400-00006		NUT	ﾅｯﾄ	2	[SCB001][AC][SCBAC] [TUE/SCB]

FIG.102 RADIATOR COVER [SCB001][AC][SCBAC][TUE/SCB]

(F4046450) ﾗｼﾞｴｰﾀｶﾊﾞｰ

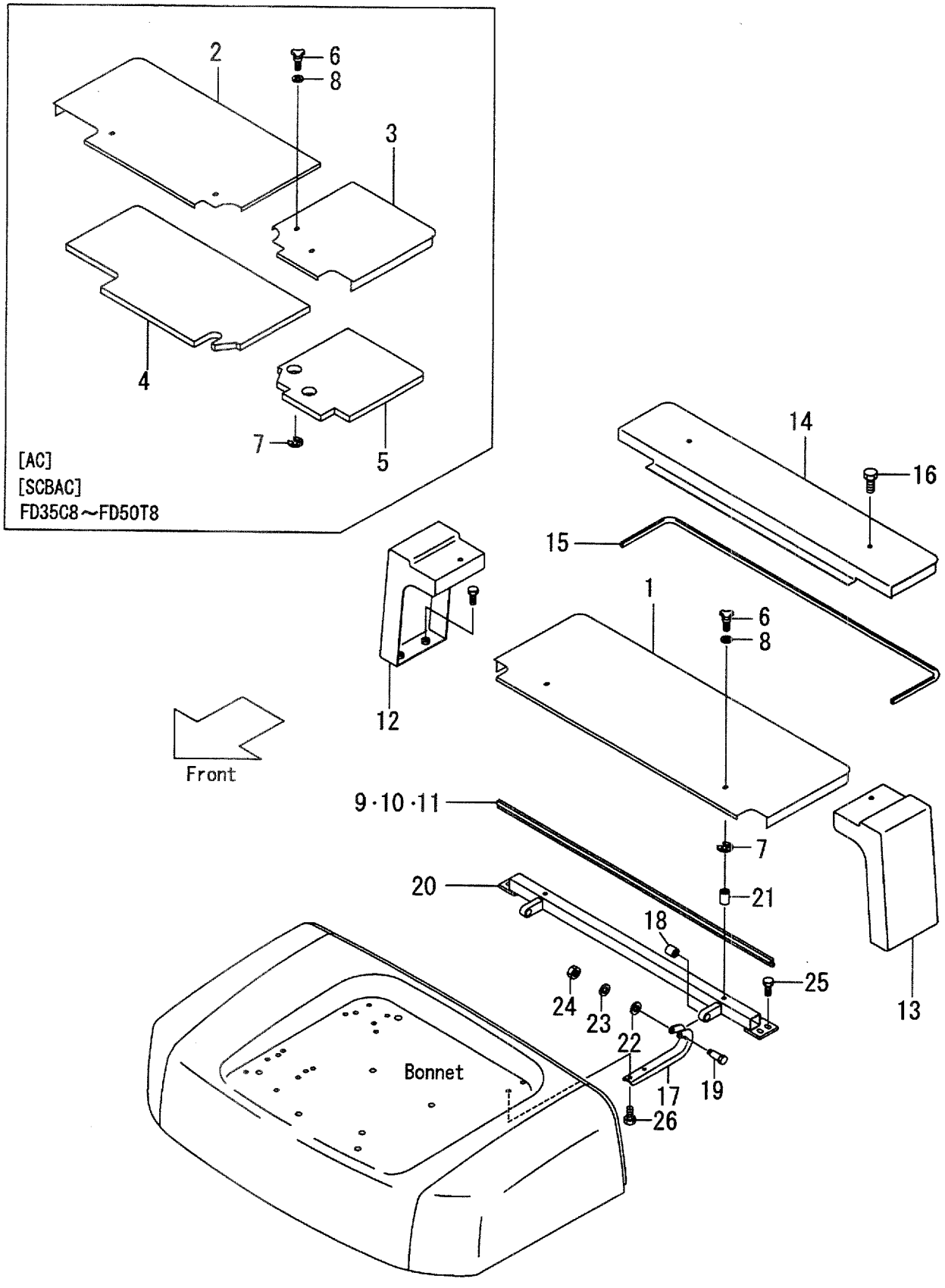

A:FD35C8 D:FD40T8 G:FD50T8 K:FG45T8
B:FD35T8 E:FD45C8 H:FG35T8 L:FG50T8
C:FD40C8 F:FD45T8 J:FG40T8

FIG.102
(F4046450)

Item No	Part No.	Mark	Description		Req'd	Remarks : Serial No.
25	01186-10025		BOLT	ﾎﾞﾙﾄ	4	[SCB001][AC][SCBAC] [TUE/SCB]
26	01183-08016		BOLT	ﾎﾞﾙﾄ	4	[SCB001][AC][SCBAC] [TUE/SCB]
27	235C5-12151	+	RUBBER,RH	ﾗﾊﾞｰ	1	G,L [SCB001][TUE/SCB]
-	235C5-12151	+	RUBBER,RH	ﾗﾊﾞｰ	1	G [AC][SCBAC]
28	235C5-12161	+	RUBBER,LH	ﾗﾊﾞｰ	1	G,L [SCB001][TUE/SCB]
-	235C5-12161	+	RUBBER,LH	ﾗﾊﾞｰ	1	G [AC][SCBAC]

FIG.103 FLOOR BOARD

(F4046440) ﾌﾛｱﾎﾞｰﾄﾞ

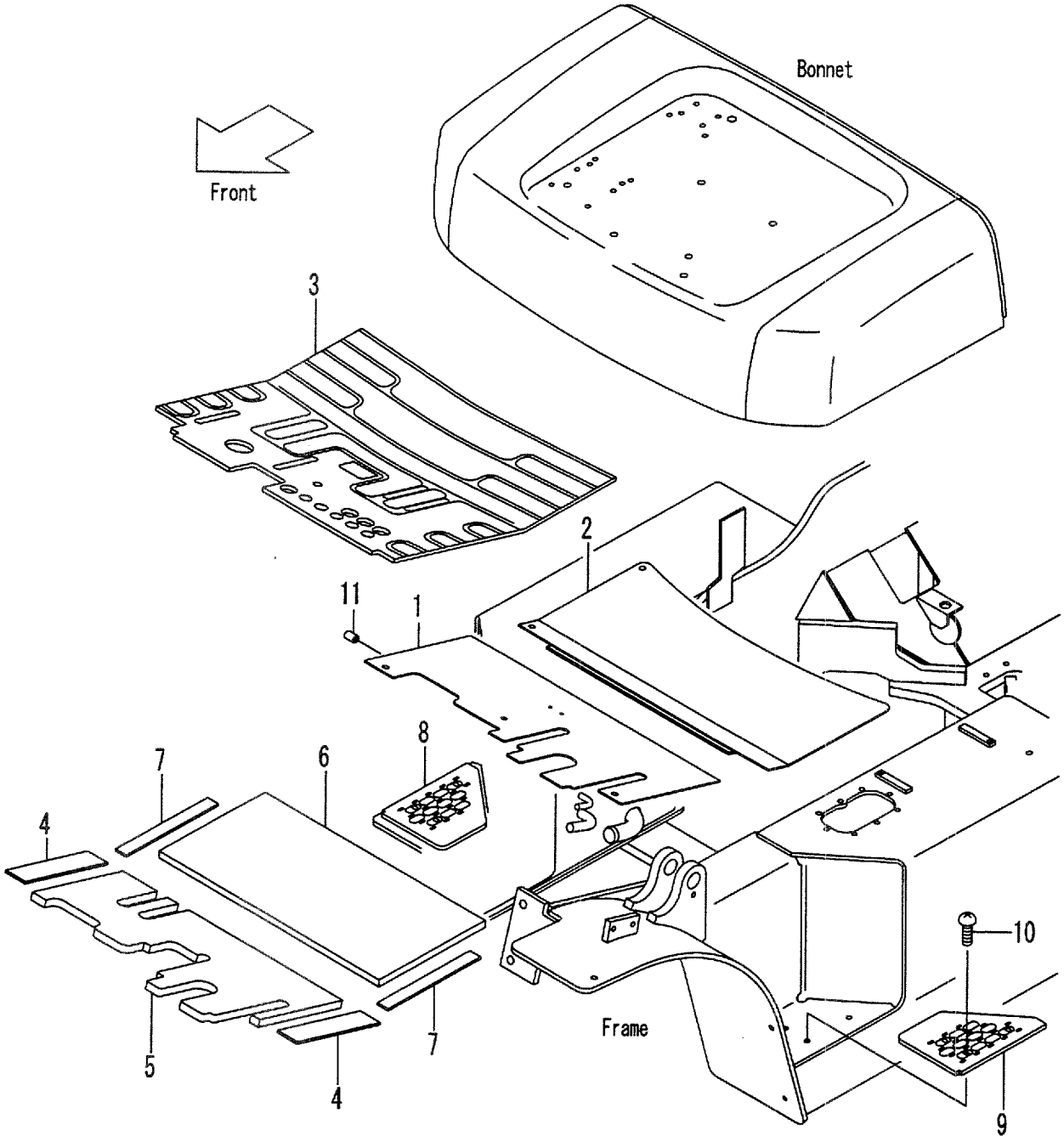

A:FD35C8 D:FD40T8 G:FD50T8 K:FG45T8
B:FD35T8 E:FD45C8 H:FG35T8 L:FG50T8
C:FD40C8 F:FD45T8 J:FG40T8

FIG.103
(F4046440)

Item No	Part No.	Mark	Description		Req'd	Remarks : Serial No.
1	235C6-50011		BOARD,FLOOR,FRONT	ﾎﾞｰﾄﾞ	1	
2	235C6-50101		BOARD,FLOOR,REAR	ﾎﾞｰﾄﾞ	1	
-	535C7-22041		BOARD,FLOOR,REAR	ﾎﾞｰﾄﾞ	1	[HR][SCB/DEF]
3	235C6-52301		MAT	ﾏｯﾄ	1	A,C,E
-	535C7-22051		MAT	ﾏｯﾄ	1	A,C,E [HR][SCB/DEF]
-	235E6-52301		MAT	ﾏｯﾄ	1	B,D,F,G,H,J,K,L
-	535E7-22051		MAT	ﾏｯﾄ	1	B,D,F,G,H,J,K,L [HR][SCB/DEF]
4	216G6-52151		RUBBER	ﾗﾊﾞｰ	2	
5	235C6-52101		RUBBER	ﾗﾊﾞｰ	1	
6	235C6-52111		RUBBER	ﾗﾊﾞｰ	1	
-	535C7-22071		RUBBER	ﾗﾊﾞｰ	1	[HR][SCB/DEF]
7	235C6-52201		RUBBER	ﾗﾊﾞｰ	2	
8	216G6-42752		STEP,RH	ｽﾃｯﾌﾟ	1	
9	216G6-42762		STEP,LH	ｽﾃｯﾌﾟ	1	[SCB/DEF](WITHOUT HR)
10	01185-08025		SCREW	ｽｸﾘｭ	6	A,B,C,D,E,F:1-188 G:1-106 H,J,K,L:1-102
-	01185-08020		SCREW	ｽｸﾘｭ	6	A,B,C,D,E,F:189- G:107- H,J,K,L:103-
-	01185-08020		SCREW	ｽｸﾘｭ	3	[HR][SCB/DEF]
11	216G6-52301		RUBBER	ﾗﾊﾞｰ	2	A,B,C,D,E,F:2724- G:637- H,J,K:400- L:133-

FIG.104 SEAT

(F4046810) シート

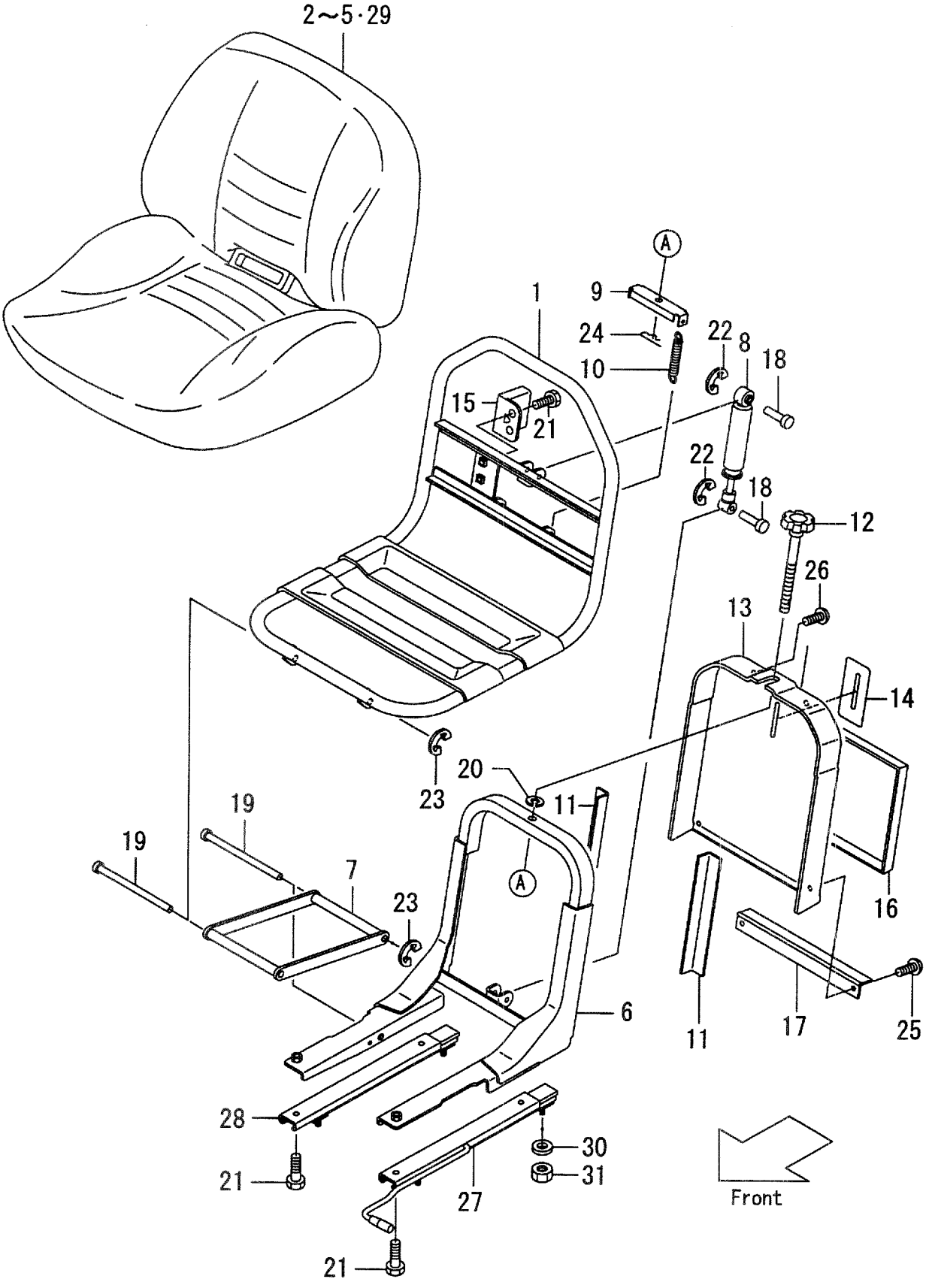

A:FD35C8:1-542 D:FD40T8:1-542 G:FD50T8:1-179 K:FG45T8:1-161
B:FD35T8:1-542 E:FD45C8:1-542 H:FG35T8:1-161 L:FG50T8:1-105
C:FD40C8:1-542 F:FD45T8:1-542 J:FG40T8:1-161

FIG.104
(F4046810)

Item No	Part No.	Mark	Description		Req'd	Remarks : Serial No.
A1	277H6-82001		SEAT-ASSY	ｼｰﾄｱｯｾﾝ	1	INC.1-29
1	277H6-82011		FRAME	ﾌﾚｰﾑ	1	
2	277H6-82021		PAD	ﾊﾟｯﾄﾞ	1	
3	277H6-82031		C-RING	Cﾘﾝｸﾞ	20	
4	277H6-82041		COVER	ｶﾊﾞｰ	1	
5	277H6-82051		CAP	ｷｬｯﾌﾟ	1	
6	277H6-82061		FRAME	ﾌﾚｰﾑ	1	
7	25596-82201		LINK	ﾘﾝｸ	1	
8	277H6-82071		DAMPER	ﾀﾞﾝﾊﾟ	1	
9	277H6-82081		STAY	ｽﾃｰ	1	
10	21236-82031		SPRING	ｽﾌﾟﾘﾝｸﾞ	2	
11	277H6-82091		GUIDE	ｶﾞｲﾄﾞ	2	
12	21236-82041		KNOB	ﾉﾌﾞ	1	
A2	277H6-82101		COVER-ASSY	ｶﾊﾞｰｱｯｾﾝ	1	INC.13,14
13	277H6-82111		COVER	ｶﾊﾞｰ	1	
14	277H6-82121		LABEL	ﾗﾍﾞﾙ	1	
15	277H6-82131		BRACKET	ﾌﾞﾗｹｯﾄ	1	
16	277H6-82141		COVER	ｶﾊﾞｰ	1	
17	277H6-82151		HINGE	ﾋﾝｼﾞ	1	
18	25596-82031		PIN	ﾋﾟﾝ	2	
19	25596-82041		SHAFT	ｼｬﾌﾄ	2	
20	277H6-82161		WASHER	ﾜｯｼｬ	1	
21	277H6-82171		BOLT	ﾎﾞﾙﾄ	8	
22	25596-82111		NUT	ﾅｯﾄ	2	
23	25596-82121		NUT	ﾅｯﾄ	2	
24	02200-03025		CLIP	ｸﾘｯﾌﾟ	1	
25	21236-82051		SCREW	ｽｸﾘｭ	9	
26	277H6-82181		SCREW	ｽｸﾘｭ	2	
27	277H6-82191		RAILE,A	ﾚｰﾙ	1	
28	216G6-82121		RAILE,B	ﾚｰﾙ	1	
29	277H6-82201		COVER	ｶﾊﾞｰ	1	
30	02010-00008		WASHER	ﾜｯｼｬ	4	
31	01400-00008		NUT	ﾅｯﾄ	4	

FIG.104A SEAT

(F4046811) シート

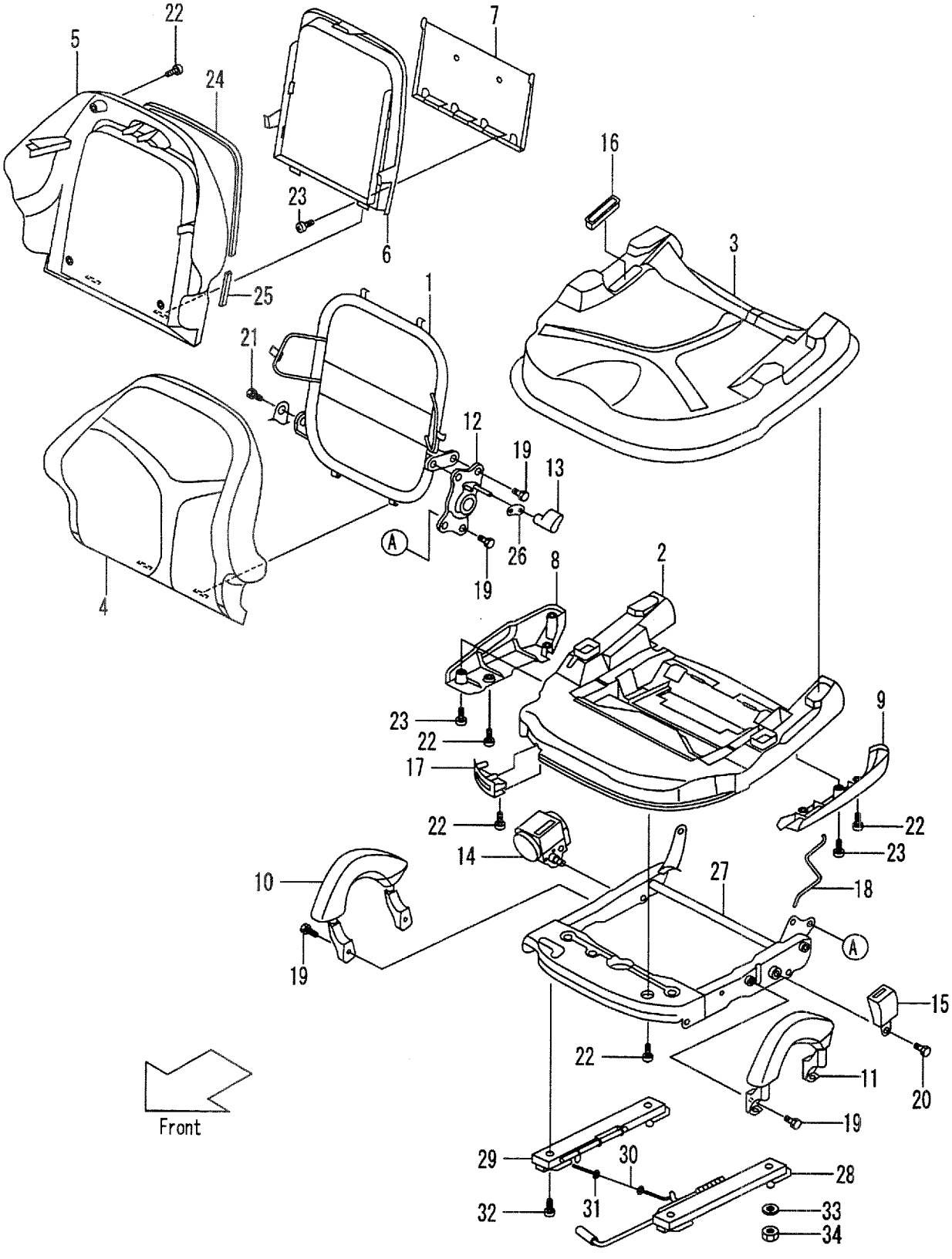

A:FD35C8:543- D:FD40T8:543- G:FD50T8:180- K:FG45T8:162-
B:FD35T8:543- E:FD45C8:543- H:FG35T8:162- L:FG50T8:106-
C:FD40C8:543- F:FD45T8:543- J:FG40T8:162-

FIG.104A
(F4046811)

Item No	Part No.	Mark	Description		Req'd	Remarks : Serial No.
A1	234A6-81001		SEAT-ASSY	ｼｰﾄｱｯｾﾝ	1	INC.1-32
1	234A6-82001		FRAME	ﾌﾚｰﾑ	1	
2	234A6-82011		PLATE,BOTTOM	ﾌﾟﾚｰﾄ	1	
3	234A6-82021		PAD,CUSHION	ﾊﾟｯﾄﾞ	1	
4	234A6-82031		PAD,BACK	ﾊﾟｯﾄﾞ	1	
5	234A6-82041		COVER	ｶﾊﾞｰ	1	
6	234A6-82051		LID	ﾘｯﾄﾞ	1	
7	234A6-82061		RACK	ﾗｯｸ	1	
8	234A6-82071		COVER,RH	ｶﾊﾞｰ	1	
9	234A6-82081		COVER,LH	ｶﾊﾞｰ	1	
10	234A6-82091		GRIP,RH	ｸﾞﾘｯﾌﾟ	1	
11	234A6-82101		GRIP,LH	ｸﾞﾘｯﾌﾟ	1	
12	234A6-82111		DVC	ﾃﾞｨｰﾌﾞｲｼｰ	1	
13	234A6-82121		KNOB	ﾉﾌﾞ	1	
14	234A6-82131		BELT	ﾍﾞﾙﾄ	1	
15	234A6-82141		BACKLE	ﾊﾞｯｸﾙ	1	
16	234A6-82151		COVER,BELT	ｶﾊﾞｰ	1	
17	234A6-82161		COVER,ADJUSTER	ｶﾊﾞｰ	1	
18	234A6-82171		SPRING	ｽﾌﾟﾘﾝｸﾞ	1	
19	NO PART NO.		BOLT & WASHER	ﾎﾞﾙﾄ&ﾜｯｼｬ	8	
20	234A6-82181		BOLT	ﾎﾞﾙﾄ	2	
21	234A6-82191		BOLT	ﾎﾞﾙﾄ	1	
22	234A6-82201		SCREW	ｽｸﾘｭ	14	
23	234A6-82211		SCREW	ｽｸﾘｭ	5	
24	234A6-82221		SEAL,A	ｼｰﾙ	1	
25	234A6-82231		SEAL,B	ｼｰﾙ	2	
26	234A6-82241		MOLE	ﾓｰﾙ	1	
27	234A6-82251		SUSPENSION	ｻｽﾍﾟﾝｼｮﾝ	1	
28	234A6-82261		RAIL,SLIDE A	ﾚｰﾙ	1	
29	234A6-82271		RAIL,SLIDE C	ﾚｰﾙ	1	
30	234A6-82281		CABLE	ｹｰﾌﾞﾙ	1	
31	234A6-82291		WASHER	ﾜｯｼｬ	2	
32	234A6-82301		BOLT	ﾎﾞﾙﾄ	4	
33	02010-00008		WASHER	ﾜｯｼｬ	4	
34	01400-00008		NUT	ﾅｯﾄ	4	

FIG.105 SEAT [EXA]

(F4046820) シート

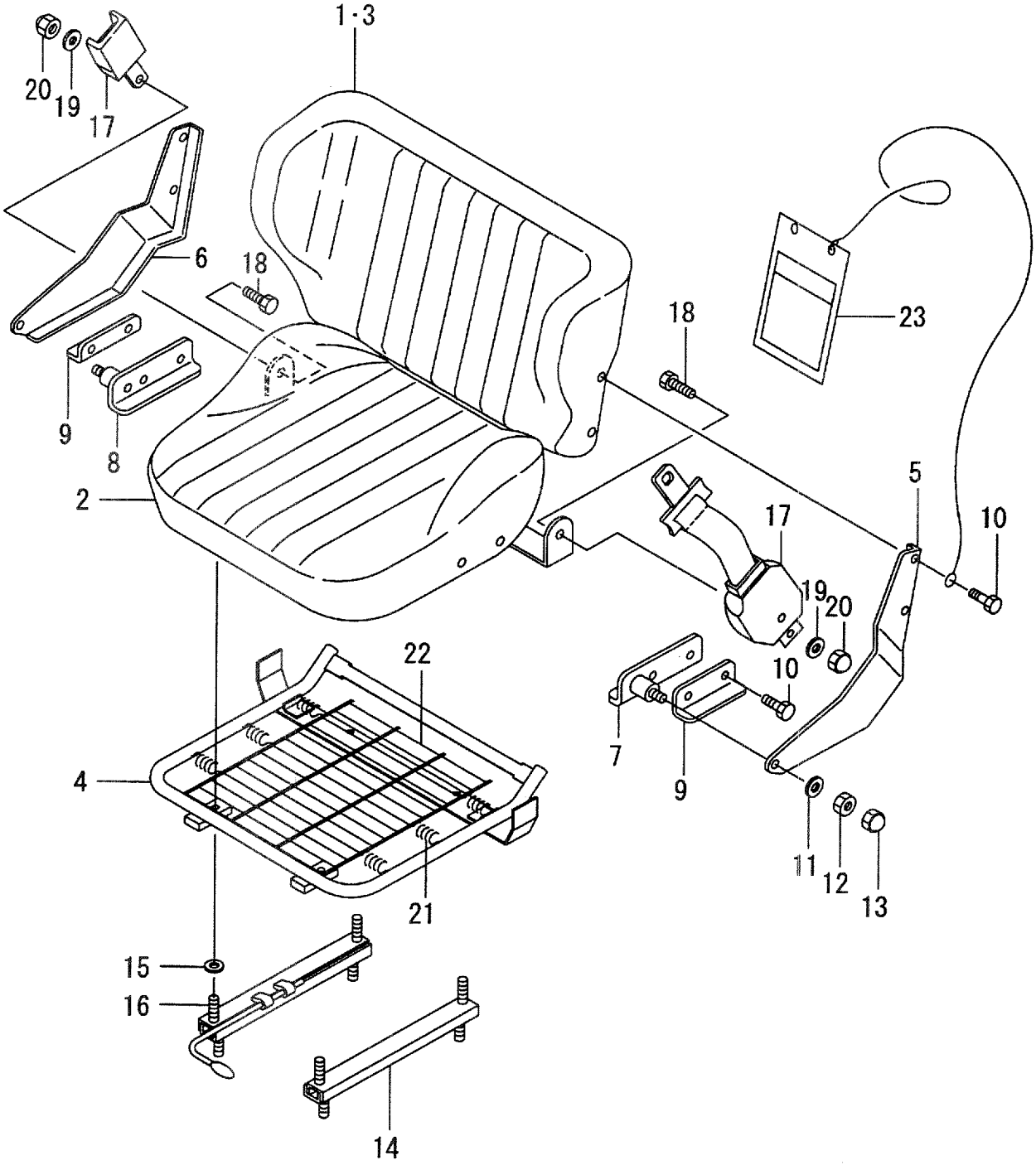

A:FD35C8 D:FD40T8 G:FD50T8:1-627 K:FG45T8
B:FD35T8 E:FD45C8 H:FG35T8 L:FG50T8:1-132
C:FD40C8 F:FD45T8 J:FG40T8

FIG.105
(F4046820)

Item No	Part No.	Mark	Description		Req'd	Remarks : Serial No.
A1	FA4846-80403		SEAT-ASSY	ｼｰﾄｱｯｾﾝ	1	B,D,F,H,J,K G,L [EXA] INC.1-17
1	FC-MM-4987		FLAME,BACK	ﾌﾚｰﾑ	1	B,D,F,H,J,K G,L [EXA]
2	FC-WM-641-1		CUSHION,SEAT	ｸｯｼｮﾝ	1	B,D,F,H,J,K G,L [EXA]
3	FC-WM-641-2		CUSHION,BACK	ｸｯｼｮﾝ	1	B,D,F,H,J,K G,L [EXA]
4	FC-WM-641-S		FLAME,SEAT	ﾌﾚｰﾑ	1	B,D,F,H,J,K G,L [EXA]
5	FC-WM-637-4L		HINGE,LH	ﾋﾝｼﾞ	1	B,D,F,H,J,K G,L [EXA]
6	FC-WM-637-4R		HINGE,RH	ﾋﾝｼﾞ	1	B,D,F,H,J,K G,L [EXA]
7	FC-WM-637-5LC		BRACKET,LH	ﾌﾞﾗｹｯﾄ	1	B,D,F,H,J,K G,L [EXA]
8	FC-WM-637-5R		BRACKET,RH	ﾌﾞﾗｹｯﾄ	1	B,D,F,H,J,K G,L [EXA]
9	FC-WM-637-6		BRACKET	ﾌﾞﾗｹｯﾄ	2	B,D,F,H,J,K G,L [EXA]
10	FC-WM-637-16		SCREW	ｽｸﾘｭ	8	B,D,F,H,J,K G,L [EXA]
11	FC-WM-637-18		BEARING	ﾍﾞｱﾘﾝｸﾞ	2	B,D,F,H,J,K G,L [EXA]
12	FC-WM-637-14		NUT	ﾅｯﾄ	2	B,D,F,H,J,K G,L [EXA]
13	FC-WM-637-19		NUT	ﾅｯﾄ	2	B,D,F,H,J,K G,L [EXA]
14	FC-WM-637-26		ADJUSTER	ｱｼﾞｬｽﾀ	2	B,D,F,H,J,K G,L [EXA]
15	FC-MP-3169		SPACER	ｽﾍﾟｰｻ	4	B,D,F,H,J,K G,L [EXA]

FIG.105 SEAT [EXA]

(F4046820) シート

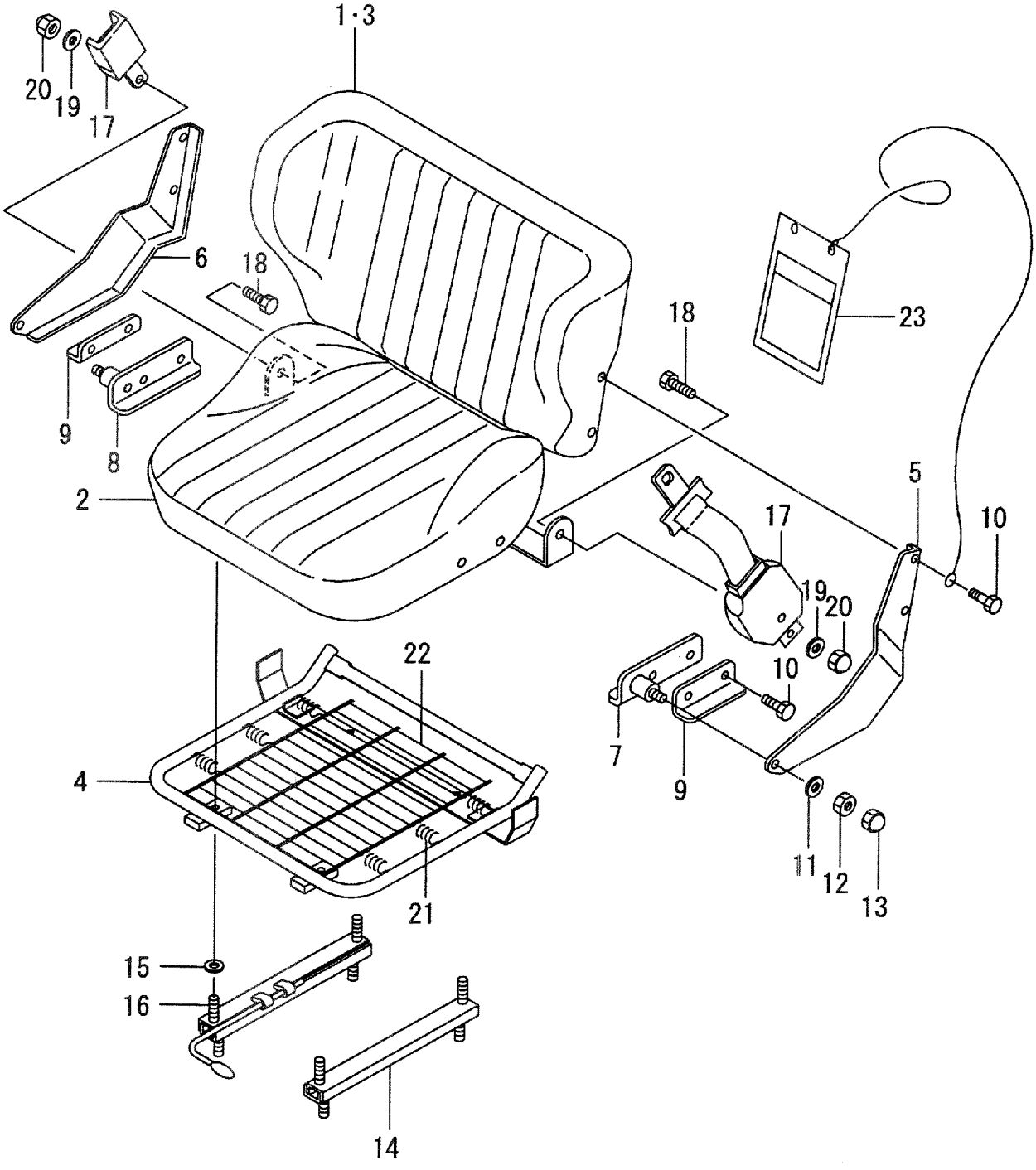

A:FD35C8 D:FD40T8 G:FD50T8:1-627 K:FG45T8
B:FD35T8 E:FD45C8 H:FG35T8 L:FG50T8:1-132
C:FD40C8 F:FD45T8 J:FG40T8

FIG.105
(F4046820)

Item No	Part No.	Mark	Description		Req'd	Remarks : Serial No.
16	FC-XP-5254		SCREW	ｽｸﾘｭ	4	B,D,F,H,J,K G,L [EXA]
17	FC-XP-5023		BELT,SEAT	ﾍﾞﾙﾄ	1	B,D,F,H,J,K G,L [EXA]
18	FC-WM-641-7		SCREW	ｽｸﾘｭ	2	B,D,F,H,J,K G,L [EXA]
19	FC-WM-641-9		WASHER	ﾜｯｼｬ	2	B,D,F,H,J,K G,L [EXA]
20	FC-WM-641-8		NUT	ﾅｯﾄ	2	B,D,F,H,J,K G,L [EXA]
21	FC-XP-1393		SPRING	ｽﾌﾟﾘﾝｸﾞ	6	B,D,F,H,J,K G,L [EXA]
22	FC-XP-1397		BLADDER	ﾌﾞﾗﾀﾞ	1	B,D,F,H,J,K G,L [EXA]
23	NO PART NO.		BOOK,HAND,OPERATORS	ﾌﾞｯｸ	1	B,D,F,H,J,K G,L [EXA]

FIG.105A SEAT [EXA]

(F4046821) シート

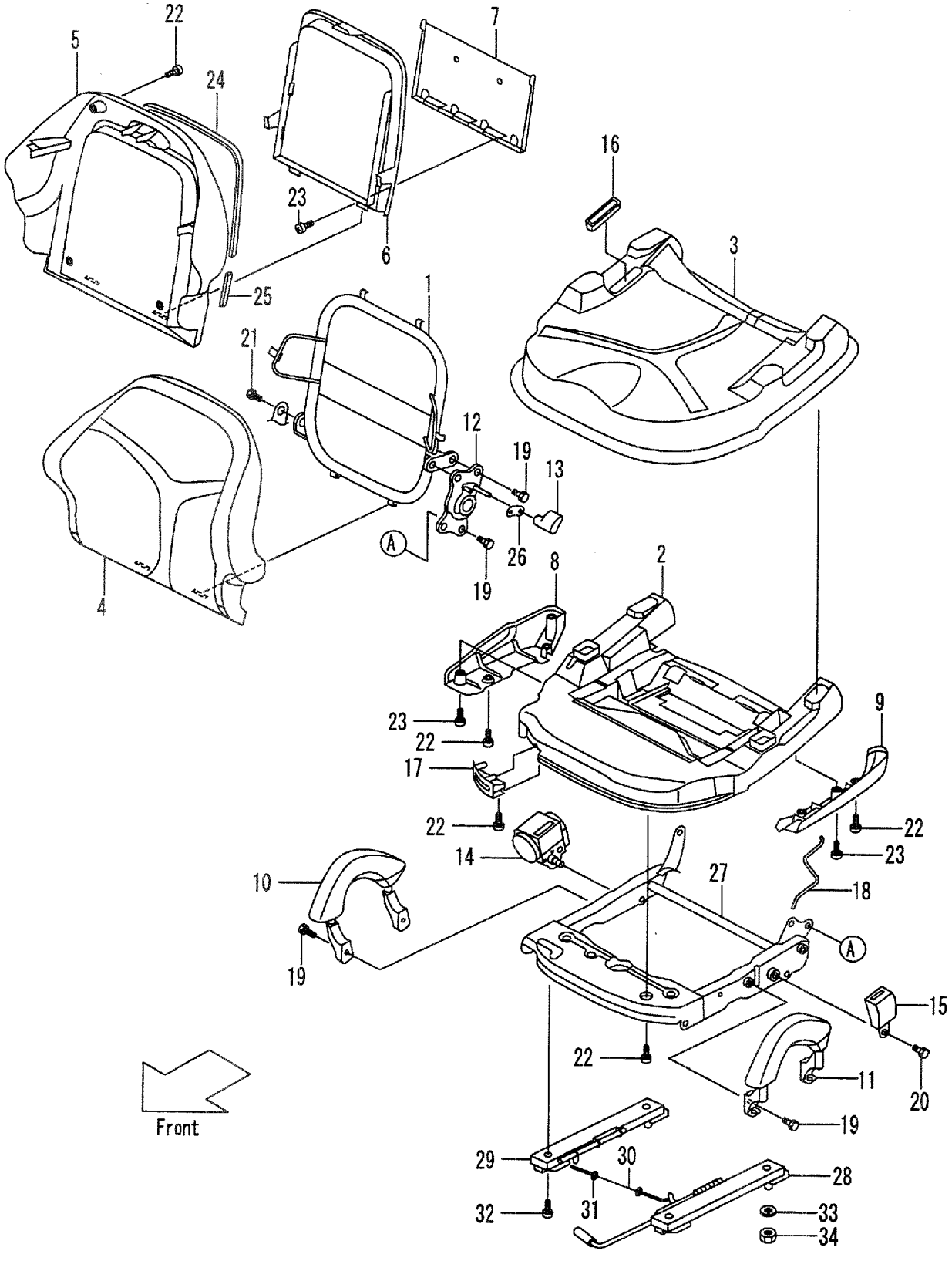

A:FD35C8 D:FD40T8 G:FD50T8:628- K:FG45T8
B:FD35T8 E:FD45C8 H:FG35T8 L:FG50T8:133-
C:FD40C8 F:FD45T8 J:FG40T8

FIG.105A
(F4046821)

Item No	Part No.	Mark	Description		Req'd	Remarks : Serial No.
A1	234A6-81001		SEAT-ASSY	ｼｰﾄｱｯｾﾝ	1	G,L [EXA] INC.1-32
1	234A6-82001		FRAME	ﾌﾚｰﾑ	1	G,L [EXA]
2	234A6-82011		PLATE,BOTTOM	ﾌﾟﾚｰﾄ	1	G,L [EXA]
3	234A6-82021		PAD,CUSHION	ﾊﾟｯﾄﾞ	1	G,L [EXA]
4	234A6-82031		PAD,BACK	ﾊﾟｯﾄﾞ	1	G,L [EXA]
5	234A6-82041		COVER	ｶﾊﾞｰ	1	G,L [EXA]
6	234A6-82051		LID	ﾘｯﾄﾞ	1	G,L [EXA]
7	234A6-82061		RACK	ﾗｯｸ	1	G,L [EXA]
8	234A6-82071		COVER,RH	ｶﾊﾞｰ	1	G,L [EXA]
9	234A6-82081		COVER,LH	ｶﾊﾞｰ	1	G,L [EXA]
10	234A6-82091		GRIP,RH	ｸﾞﾘｯﾌﾟ	1	G,L [EXA]
11	234A6-82101		GRIP,LH	ｸﾞﾘｯﾌﾟ	1	G,L [EXA]
12	234A6-82111		DVC	ﾃﾞｨｰﾌﾞｲｼｰ	1	G,L [EXA]
13	234A6-82121		KNOB	ﾉﾌﾞ	1	G,L [EXA]
14	234A6-82131		BELT	ﾍﾞﾙﾄ	1	G,L [EXA]
15	234A6-82141		BACKLE	ﾊﾞｯｸﾙ	1	G,L [EXA]
16	234A6-82151		COVER,BELT	ｶﾊﾞｰ	1	G,L [EXA]
17	234A6-82161		COVER,ADJUSTER	ｶﾊﾞｰ	1	G,L [EXA]
18	234A6-82171		SPRING	ｽﾌﾟﾘﾝｸﾞ	1	G,L [EXA]
19	NO PART NO.		BOLT & WASHER	ﾎﾞﾙﾄ&ﾜｯｼｬ	8	G,L [EXA]
20	234A6-82181		BOLT	ﾎﾞﾙﾄ	2	G,L [EXA]
21	234A6-82191		BOLT	ﾎﾞﾙﾄ	1	G,L [EXA]
22	234A6-82201		SCREW	ｽｸﾘｭ	14	G,L [EXA]
23	234A6-82211		SCREW	ｽｸﾘｭ	5	G,L [EXA]
24	234A6-82221		SEAL,A	ｼｰﾙ	1	G,L [EXA]

FIG.105A SEAT [EXA]

(F4046821) シート

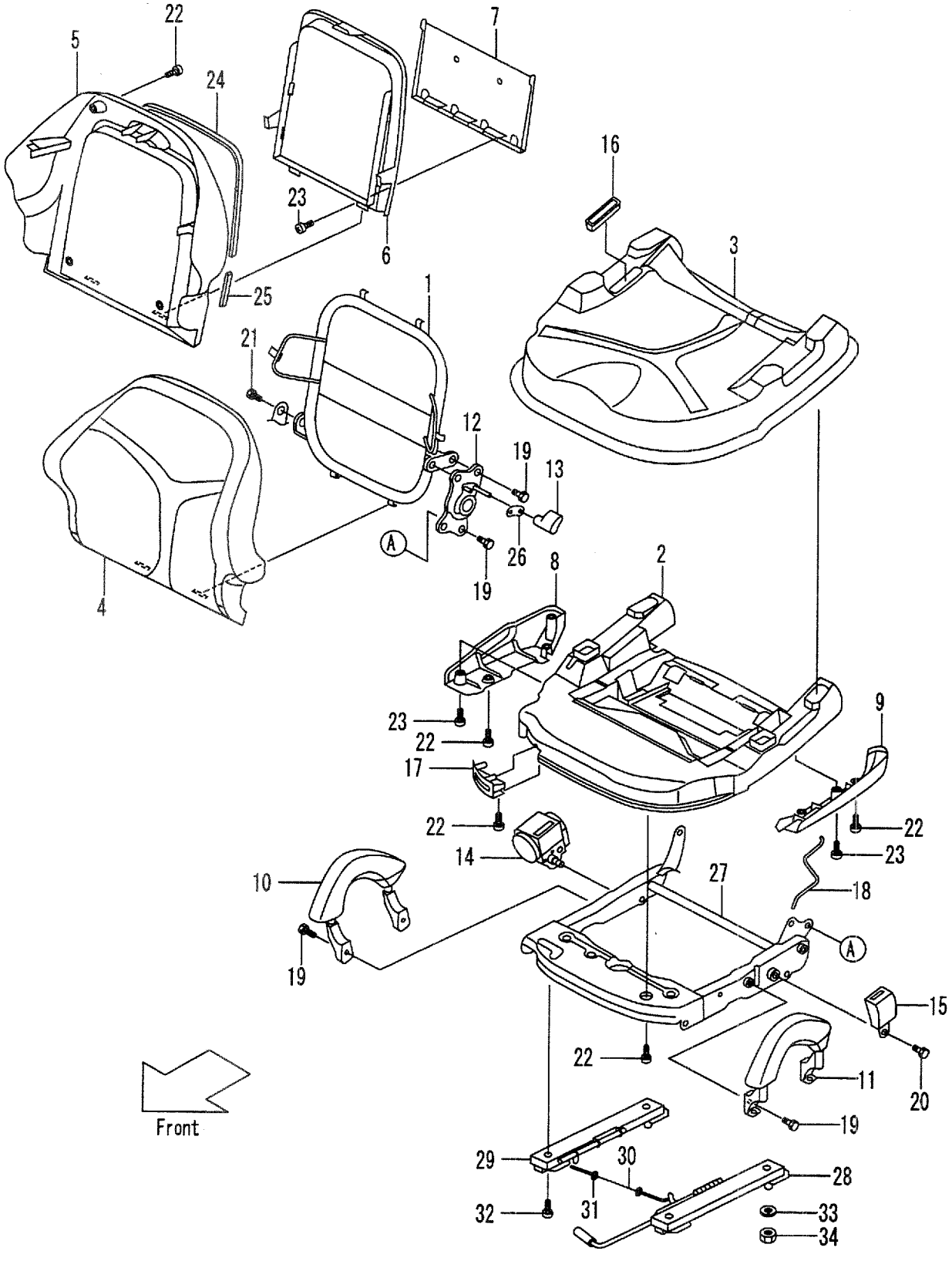

A:FD35C8 D:FD40T8 G:FD50T8:628- K:FG45T8
B:FD35T8 E:FD45C8 H:FG35T8 L:FG50T8:133-
C:FD40C8 F:FD45T8 J:FG40T8

FIG.105A
(F4046821)

Item No	Part No.	Mark	Description		Req'd	Remarks : Serial No.
25	234A6-82231		SEAL,B	シール	2	G,L [EXA]
26	234A6-82241		MOLE	モール	1	G,L [EXA]
27	234A6-82251		SUSPENSION	ｻｽﾍﾟﾝｼｮﾝ	1	G,L [EXA]
28	234A6-82261		RAIL,SLIDE A	レール	1	G,L [EXA]
29	234A6-82271		RAIL,SLIDE C	レール	1	G,L [EXA]
30	234A6-82281		CABLE	ｹｰﾌﾞﾙ	1	G,L [EXA]
31	234A6-82291		WASHER	ﾜｯｼｬ	2	G,L [EXA]
32	234A6-82301		BOLT	ﾎﾞﾙﾄ	4	G,L [EXA]
33	02010-00008		WASHER	ﾜｯｼｬ	4	G,L [EXA]
34	01400-00008		NUT	ﾅｯﾄ	4	G,L [EXA]

FIG.106 SEAT [EXC,EXD,EXE,EXH,EXN]

(F4046830) シート

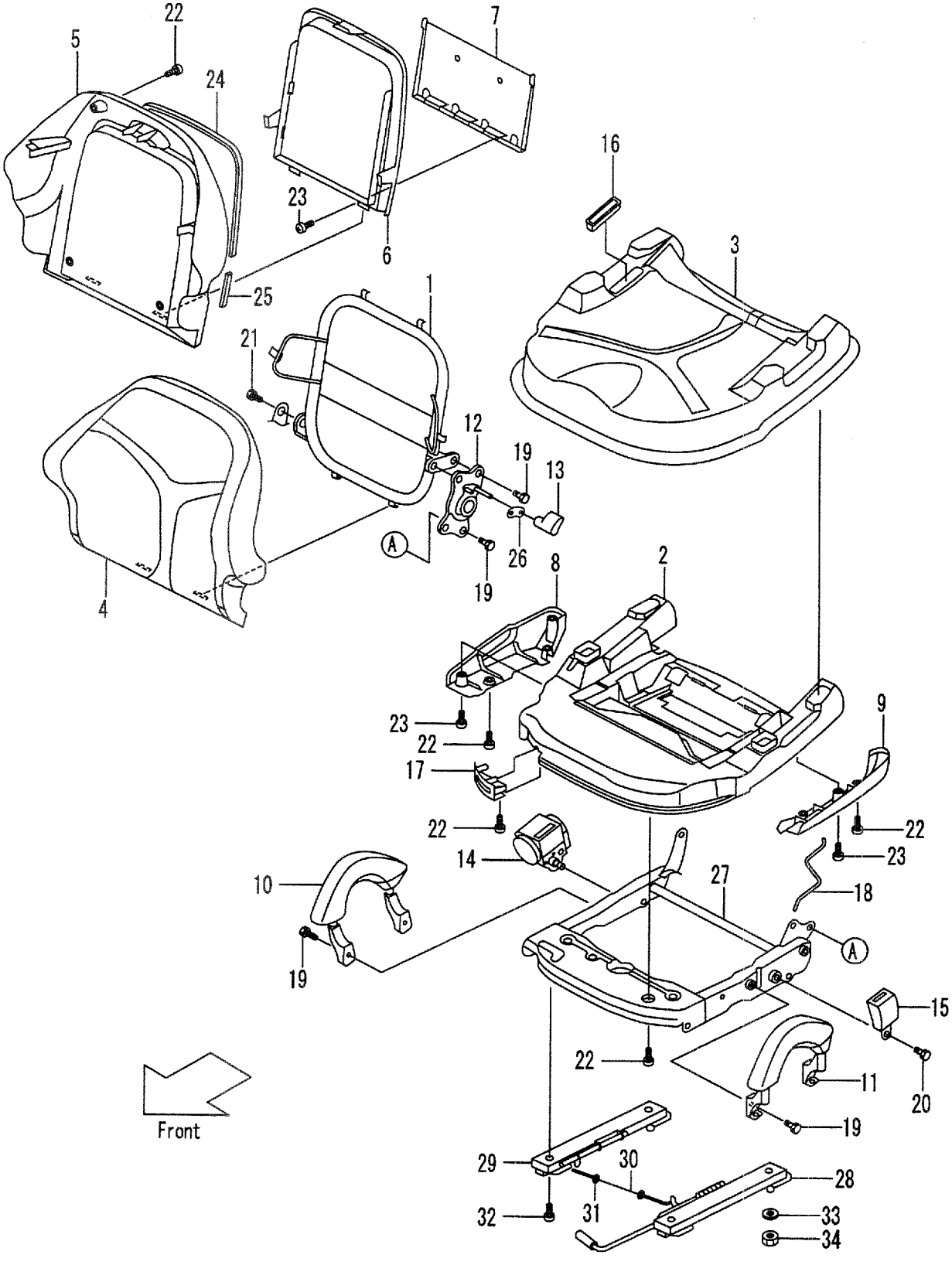

A:FD35C8:503-542 D:FD40T8:503-542 G:FD50T8:171-179 K:FG45T8:156-161
B:FD35T8:503-542 E:FD45C8:503-542 H:FG35T8:156-161 L:FG50T8:1-105
C:FD40C8:503-542 F:FD45T8:503-542 J:FG40T8:156-161

FIG.106
(F4046830)

Item No	Part No.	Mark	Description		Req'd	Remarks : Serial No.
A1	234A6-81001		SEAT-ASSY	ｼｰﾄｱｯｾﾝ	1	[EXC][EXD][EXE][EXH][EXN]
						INC.1-32
1	234A6-82001		FRAME	ﾌﾚｰﾑ	1	[EXC][EXD][EXE][EXH][EXN]
2	234A6-82011		PLATE,BOTTOM	ﾌﾟﾚｰﾄ	1	[EXC][EXD][EXE][EXH][EXN]
3	234A6-82021		PAD,CUSHION	ﾊﾟｯﾄﾞ	1	[EXC][EXD][EXE][EXH][EXN]
4	234A6-82031		PAD,BACK	ﾊﾟｯﾄﾞ	1	[EXC][EXD][EXE][EXH][EXN]
5	234A6-82041		COVER	ｶﾊﾞｰ	1	[EXC][EXD][EXE][EXH][EXN]
6	234A6-82051		LID	ﾘｯﾄﾞ	1	[EXC][EXD][EXE][EXH][EXN]
7	234A6-82061		RACK	ﾗｯｸ	1	[EXC][EXD][EXE][EXH][EXN]
8	234A6-82071		COVER,RH	ｶﾊﾞｰ	1	[EXC][EXD][EXE][EXH][EXN]
9	234A6-82081		COVER,LH	ｶﾊﾞｰ	1	[EXC][EXD][EXE][EXH][EXN]
10	234A6-82091		GRIP,RH	ｸﾞﾘｯﾌﾟ	1	[EXC][EXD][EXE][EXH][EXN]
11	234A6-82101		GRIP,LH	ｸﾞﾘｯﾌﾟ	1	[EXC][EXD][EXE][EXH][EXN]
12	234A6-82111		DVC	ﾃﾞｨｰﾌﾞｲｼｰ	1	[EXC][EXD][EXE][EXH][EXN]
13	234A6-82121		KNOB	ﾉﾌﾞ	1	[EXC][EXD][EXE][EXH][EXN]
14	234A6-82131		BELT	ﾍﾞﾙﾄ	1	[EXC][EXD][EXE][EXH][EXN]
15	234A6-82141		BACKLE	ﾊﾞｯｸﾙ	1	[EXC][EXD][EXE][EXH][EXN]
16	234A6-82151		COVER,BELT	ｶﾊﾞｰ	1	[EXC][EXD][EXE][EXH][EXN]
17	234A6-82161		COVER,ADJUSTER	ｶﾊﾞｰ	1	[EXC][EXD][EXE][EXH][EXN]
18	234A6-82171		SPRING	ｽﾌﾟﾘﾝｸﾞ	1	[EXC][EXD][EXE][EXH][EXN]
19	NO PART NO.		BOLT & WASHER	ﾎﾞﾙﾄ&ﾜｯｼｬ	8	[EXC][EXD][EXE][EXH][EXN]
20	234A6-82181		BOLT	ﾎﾞﾙﾄ	2	[EXC][EXD][EXE][EXH][EXN]
21	234A6-82191		BOLT	ﾎﾞﾙﾄ	1	[EXC][EXD][EXE][EXH][EXN]
22	234A6-82201		SCREW	ｽｸﾘｭ	14	[EXC][EXD][EXE][EXH][EXN]
23	234A6-82211		SCREW	ｽｸﾘｭ	5	[EXC][EXD][EXE][EXH][EXN]
24	234A6-82221		SEAL,A	ｼｰﾙ	1	[EXC][EXD][EXE][EXH][EXN]
25	234A6-82231		SEAL,B	ｼｰﾙ	2	[EXC][EXD][EXE][EXH][EXN]
26	234A6-82241		MOLE	ﾓｰﾙ	1	[EXC][EXD][EXE][EXH][EXN]
27	234A6-82251		SUSPENSION	ｻｽﾍﾟﾝｼｮﾝ	1	[EXC][EXD][EXE][EXH][EXN]
28	234A6-82261		RAIL,SLIDE A	ﾚｰﾙ	1	[EXC][EXD][EXE][EXH][EXN]
29	234A6-82271		RAIL,SLIDE C	ﾚｰﾙ	1	[EXC][EXD][EXE][EXH][EXN]
30	234A6-82281		CABLE	ｹｰﾌﾞﾙ	1	[EXC][EXD][EXE][EXH][EXN]
31	234A6-82291		WASHER	ﾜｯｼｬ	2	[EXC][EXD][EXE][EXH][EXN]
32	234A6-82301		BOLT	ﾎﾞﾙﾄ	4	[EXC][EXD][EXE][EXH][EXN]
33	02010-00008		WASHER	ﾜｯｼｬ	4	[EXC][EXD][EXE][EXH][EXN]
34	01400-00008		NUT	ﾅｯﾄ	4	[EXC][EXD][EXE][EXH][EXN]

FIG.107 SEAT [HGL]

(F4046840) シート

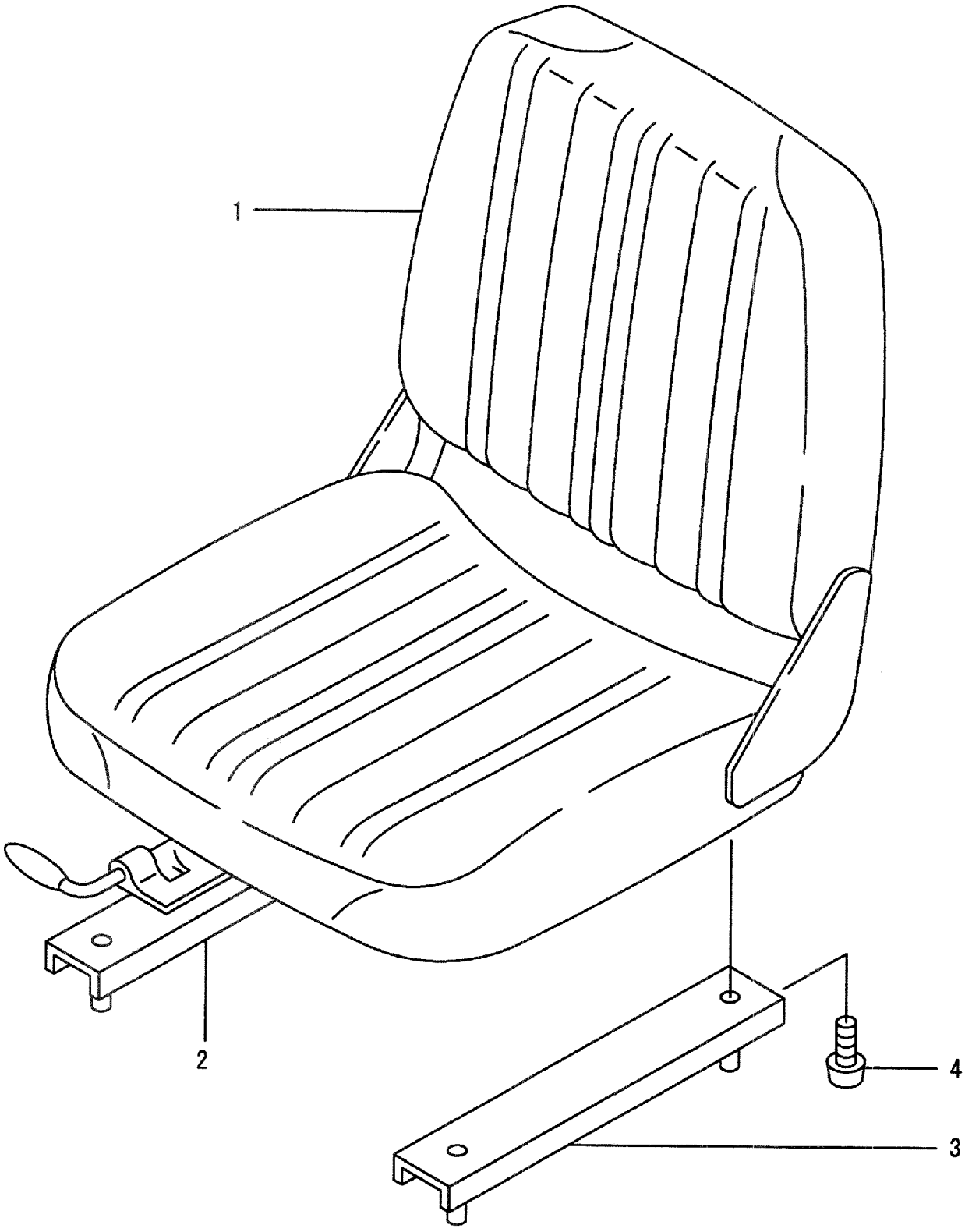

A:FD35C8 D:FD40T8 G:FD50T8 K:FG45T8
B:FD35T8 E:FD45C8 H:FG35T8 L:FG50T8
C:FD40C8 F:FD45T8 J:FG40T8

FIG.107
(F4046840)

Item No	Part No.	Mark	Description		Req'd	Remarks : Serial No.
A1	27016-80602		SEAT-ASSY	ｼｰﾄｱｯｾﾝ	1	[HGL] INC.1-4
1	NO PART NO.	#	FRAME	ﾌﾚｰﾑ	1	[HGL]
2	NO PART NO.	#	ADJUSTER	ｱｼﾞｬｽﾀ	1	[HGL]
3	NO PART NO.	#	ADJUSTER	ｱｼﾞｬｽﾀ	1	[HGL]
4	NO PART NO.	#	SCREW	ｽｸﾘｭ	4	[HGL]
5	02010-00008	+	WASHER	ﾜｯｼｬ	4	[HGL]
6	01400-00008	+	NUT	ﾅｯﾄ	4	[HGL]

FIG.108 PUMP DRIVING SYSTEM

(F4047110) ﾎﾟﾝﾌﾟﾄﾞﾗｲﾋﾞﾝｸﾞｼｽﾃﾑ

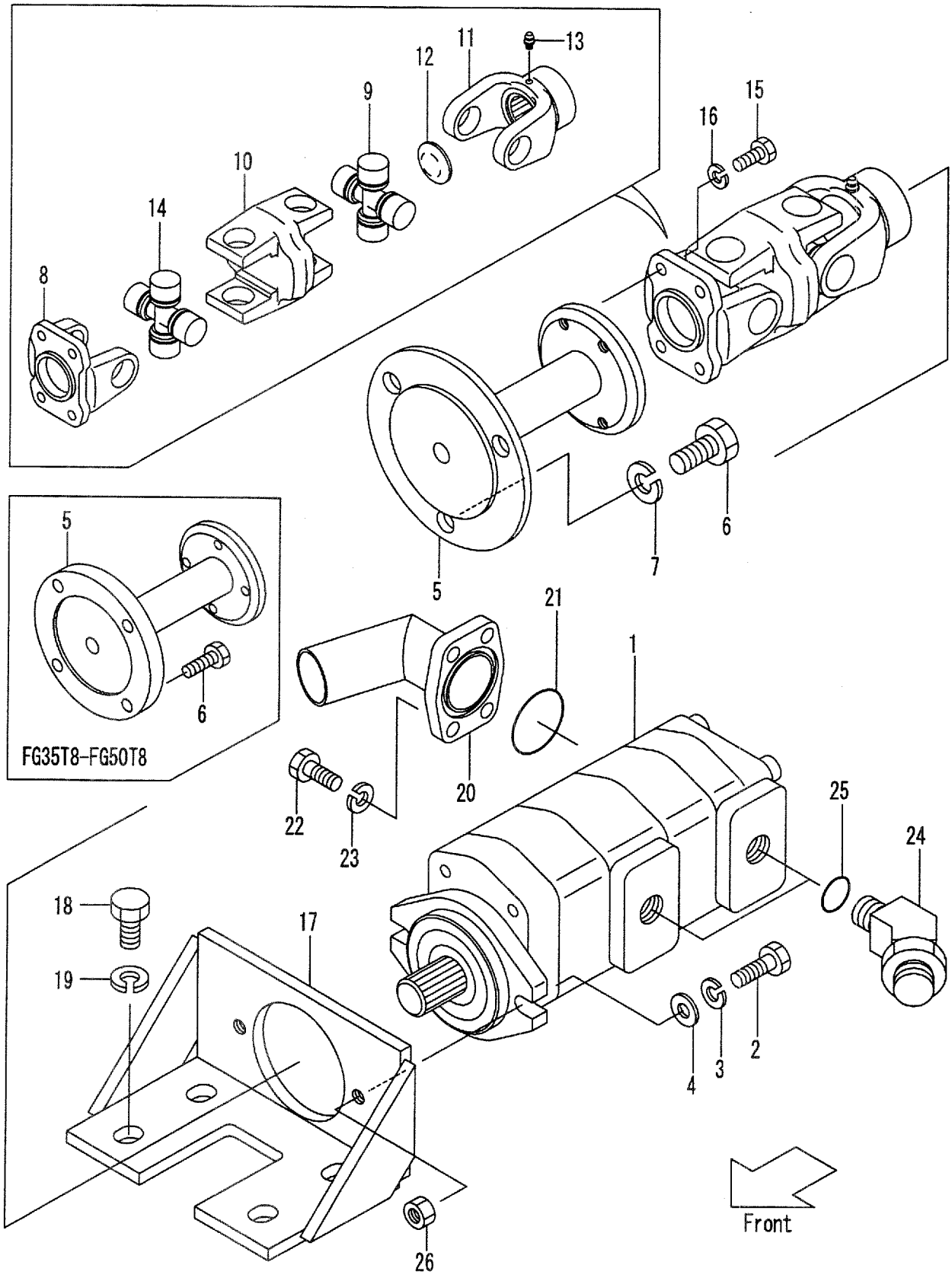

A:FD35C8 D:FD40T8 G:FD50T8 K:FG45T8
B:FD35T8 E:FD45C8 H:FG35T8 L:FG50T8
C:FD40C8 F:FD45T8 J:FG40T8

FIG.108
(F4047110)

Item No	Part No.	Mark	Description		Req'd	Remarks : Serial No.
1	135C7-10021		PUMP,GEAR	ﾎﾟﾝﾌﾟ	1	A,B,C,D SEE FIG.109
-	135C7-10021		PUMP,GEAR	ﾎﾟﾝﾌﾟ	1	H,J:1-102 SEE FIG.109
-	124W7-10301		PUMP	ﾎﾟﾝﾌﾟ	1	H,J:103- SEE FIG.109
-	128E7-10201		PUMP	ﾎﾟﾝﾌﾟ	1	E,F,G SEE FIG.109
-	128E7-10201		PUMP	ﾎﾟﾝﾌﾟ	1	K,L:1-102 SEE FIG.109
-	124W7-10301		PUMP	ﾎﾟﾝﾌﾟ	1	K,L:103- SEE FIG.109
2	01103-10030		BOLT	ﾎﾞﾙﾄ	2	A,B,C,D,E,F:1-245 G:1-127 H,J,K:1-105 L:1-102
-	01103-10045		BOLT	ﾎﾞﾙﾄ	2	A,B,C,D,E,F:246- G:128- H,J,K:106- L:103-
3	02011-00010		WASHER	ﾜｯｼｬ	2	
4	02000-00010		WASHER	ﾜｯｼｬ	2	
5	235C7-22011		COUPLING	ｶｯﾌﾟﾘﾝｸﾞ	1	A,B,C,D,E,F,G
-	235L7-22011		COUPLING	ｶｯﾌﾟﾘﾝｸﾞ	1	H,J,K,L
6	01106-14030		BOLT	ﾎﾞﾙﾄ	3	A,B,C,D,E,F,G
-	01116-10030		BOLT	ﾎﾞﾙﾄ	4	H,J,K,L
7	02011-00014		WASHER	ﾜｯｼｬ	3	A,B,C,D,E,F,G
A1	201C3-82081		SHAFT-ASSY,PROPELLER	ﾌﾟﾛﾍﾟﾗｼｬﾌﾄｱｯｾﾝ	1	INC.8-14
8	224W7-22201		FLANGE	ﾌﾗﾝｼﾞ	1	
9	224W7-22211		JOINT,UNIVERSAL	ｼﾞｮｲﾝﾄ	1	
10	224W7-22231		YOKE	ﾖｰｸ	1	
A2	235C7-22051		YOKE-ASSY	ﾖｰｸｱｯｾﾝ	1	INC.11-13
11	NO PART NO.	#	YOKE	ﾖｰｸ	1	
12	NO PART NO.	#	PLUG	ﾌﾟﾗｸﾞ	1	
13	NO PART NO.	#	FITTING	ﾌｨｯﾃｨﾝｸﾞ	1	
14	224W7-22221		JOINT,UNIVERSAL	ｼﾞｮｲﾝﾄ	1	
15	01106-08020		BOLT	ﾎﾞﾙﾄ	4	
16	02011-00008		WASHER	ﾜｯｼｬ	4	
17	235C7-22061		BRACKET	ﾌﾞﾗｹｯﾄ	1	
18	01184-12025		BOLT	ﾎﾞﾙﾄ	4	
19	256C9-52372		WASHER	ﾜｯｼｬ	4	
20	25957-62011		FITTING	ﾌｨｯﾃｨﾝｸﾞ	1	
21	03310-00450		O-RING	Oﾘﾝｸﾞ	1	
22	01110-10025		BOLT	ﾎﾞﾙﾄ	4	
23	02010-00010		WASHER	ﾜｯｼｬ	4	
A3	224W7-60221		ELBOW-ASSY	ｴﾙﾎﾞｱｯｾﾝ	2	INC.24,25
24	NO PART NO.	#	ELBOW	ｴﾙﾎﾞ	2	
25	03320-00240		O-RING	Oﾘﾝｸﾞ	2	
26	01400-10010		NUT	ﾅｯﾄ	2	

FIG.109 GEAR PUMP

(F4047120) ｷﾞﾔｰﾎﾟﾝﾌﾟ

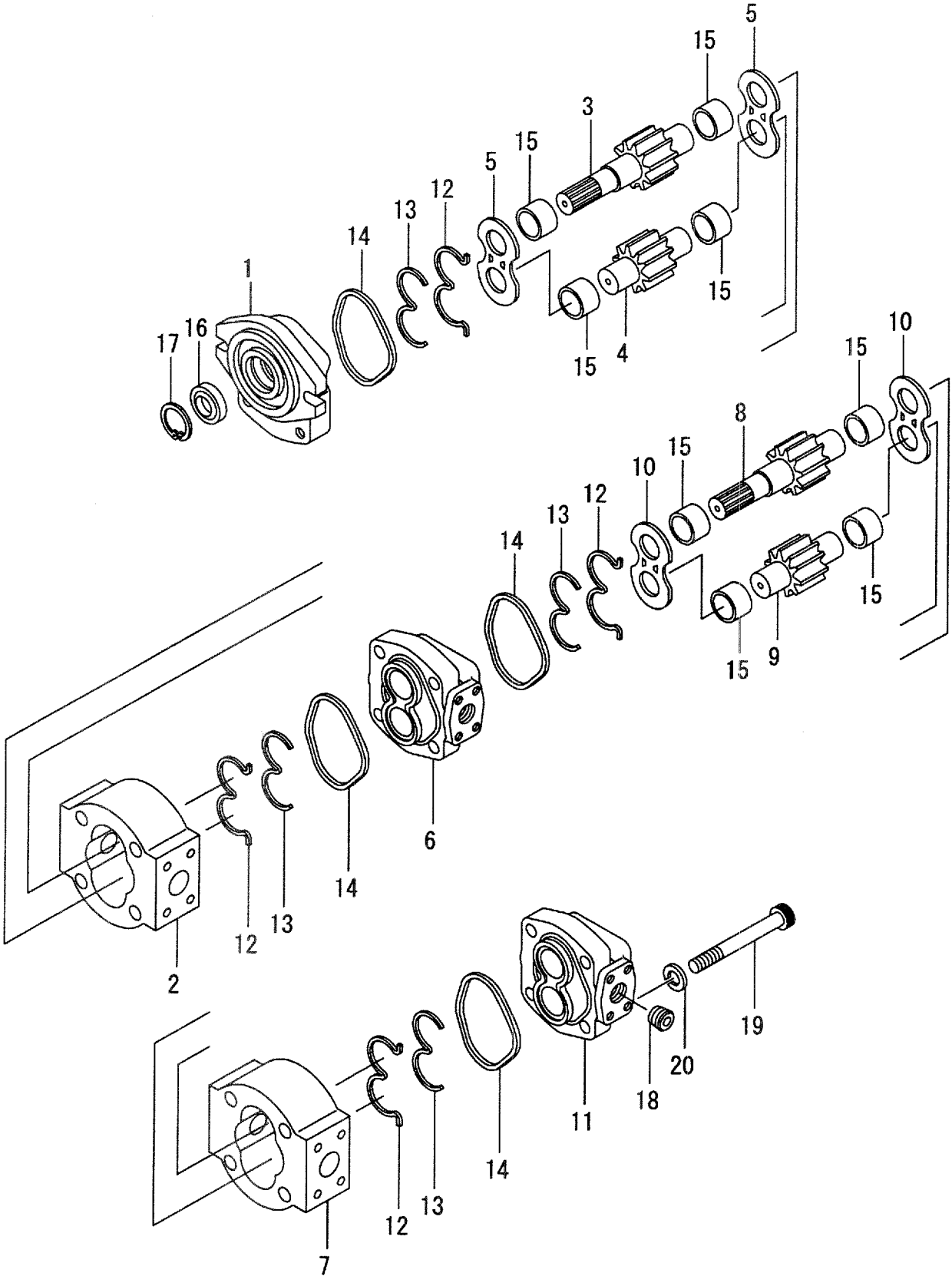

A:FD35C8 D:FD40T8 G:FD50T8 K:FG45T8
B:FD35T8 E:FD45C8 H:FG35T8 L:FG50T8
C:FD40C8 F:FD45T8 J:FG40T8

FIG.109
(F4047120)

Item No	Part No.	Mark	Description		Req'd	Remarks : Serial No.
A1	135C7-10021		PUMP-ASSY,GEAR	ｷﾞﾔｰﾎﾟﾝﾌﾟｱｯｾﾝ	1	A,B,C,D INC.1-20
-	135C7-10021		PUMP-ASSY,GEAR	ｷﾞﾔｰﾎﾟﾝﾌﾟｱｯｾﾝ	1	H,J:1-102 INC.1-20
-	124W7-10301		PUMP-ASSY,GEAR	ｷﾞﾔｰﾎﾟﾝﾌﾟｱｯｾﾝ	1	H,J:103- INC.1-20
-	128E7-10201		PUMP-ASSY,GEAR	ｷﾞﾔｰﾎﾟﾝﾌﾟｱｯｾﾝ	1	E,F,G INC.1-20
-	128E7-10201		PUMP-ASSY,GEAR	ｷﾞﾔｰﾎﾟﾝﾌﾟｱｯｾﾝ	1	K,L:1-102 INC.1-20
-	124W7-10301		PUMP-ASSY,GEAR	ｷﾞﾔｰﾎﾟﾝﾌﾟｱｯｾﾝ	1	K,L:103- INC.1-20
1	NO PART NO.	#	COVER,FRONT	ｶﾊﾞｰ	1	
2	NO PART NO.	#	BODY	ﾎﾞﾃﾞｨ	1	A,B,C,D,H,J
-	NO PART NO.	#	BODY	ﾎﾞﾃﾞｨ	1	E,F,G,K,L
3	NO PART NO.	#	GEAR,DRIVE	ｷﾞﾔｰ	1	A,B,C,D,H,J
-	NO PART NO.	#	GEAR,DRIVE	ｷﾞﾔｰ	1	E,F,G,K,L
4	NO PART NO.	#	GEAR,DRIVEN	ｷﾞﾔｰ	1	A,B,C,D,H,J
-	NO PART NO.	#	GEAR,DRIVEN	ｷﾞﾔｰ	1	E,F,G,K,L
5	NO PART NO.	#	PLATE	ﾌﾟﾚｰﾄ	2	
6	NO PART NO.	#	ADAPTER	ｱﾀﾞﾌﾟﾀ	1	A,B,C,D,H,J
-	NO PART NO.	#	ADAPTER	ｱﾀﾞﾌﾟﾀ	1	E,F,G,K,L
7	NO PART NO.	#	BODY	ﾎﾞﾃﾞｨ	1	A,B,C,D,H,J
-	NO PART NO.	#	BODY	ﾎﾞﾃﾞｨ	1	E,F,G,K,L
8	NO PART NO.	#	GEAR,DRIVE	ｷﾞﾔｰ	1	A,B,C,D,H,J
-	NO PART NO.	#	GEAR,DRIVE	ｷﾞﾔｰ	1	E,F,G,K,L
9	NO PART NO.	#	GEAR,DRIVEN	ｷﾞﾔｰ	1	A,B,C,D,H,J
-	NO PART NO.	#	GEAR,DRIVEN	ｷﾞﾔｰ	1	E,F,G,K,L
10	NO PART NO.	#	PLATE	ﾌﾟﾚｰﾄ	2	
11	NO PART NO.	#	COVER,REAR	ｶﾊﾞｰ	1	A,B,C,D,H,J
-	NO PART NO.	#	COVER,REAR	ｶﾊﾞｰ	1	E,F,G,K,L
12	R-402-00483-05	*	RING,BACK-UP	ﾘﾝｸﾞ	4	
13	R-402-00681-00	*	GASKET	ｶﾞｽｹｯﾄ	4	
14	R-402-00516-38	*	GASKET	ｶﾞｽｹｯﾄ	4	
15	NO PART NO.	#	BUSHING	ﾌﾞｯｼﾝｸﾞ	8	
16	R-400-00384-15	*	SEAL,OIL	ｼｰﾙ	1	
17	NO PART NO.	#	RING,SNAP	ｽﾅｯﾌﾟﾘﾝｸﾞ	1	
18	NO PART NO.	#	PLUG	ﾌﾟﾗｸﾞ	1	
19	R-400-50647-27		BOLT	ﾎﾞﾙﾄ	4	
20	R-402-00012-12		WASHER	ﾜｯｼｬ	4	
K1	124W7-10351		KIT,OVERHAUL	ｵｰﾊﾞﾎｰﾙｷｯﾄ	1	INC.12-14,16

FIG.110 CONTROL VALVE [2SV]

(F4047310) コントロールバルブ

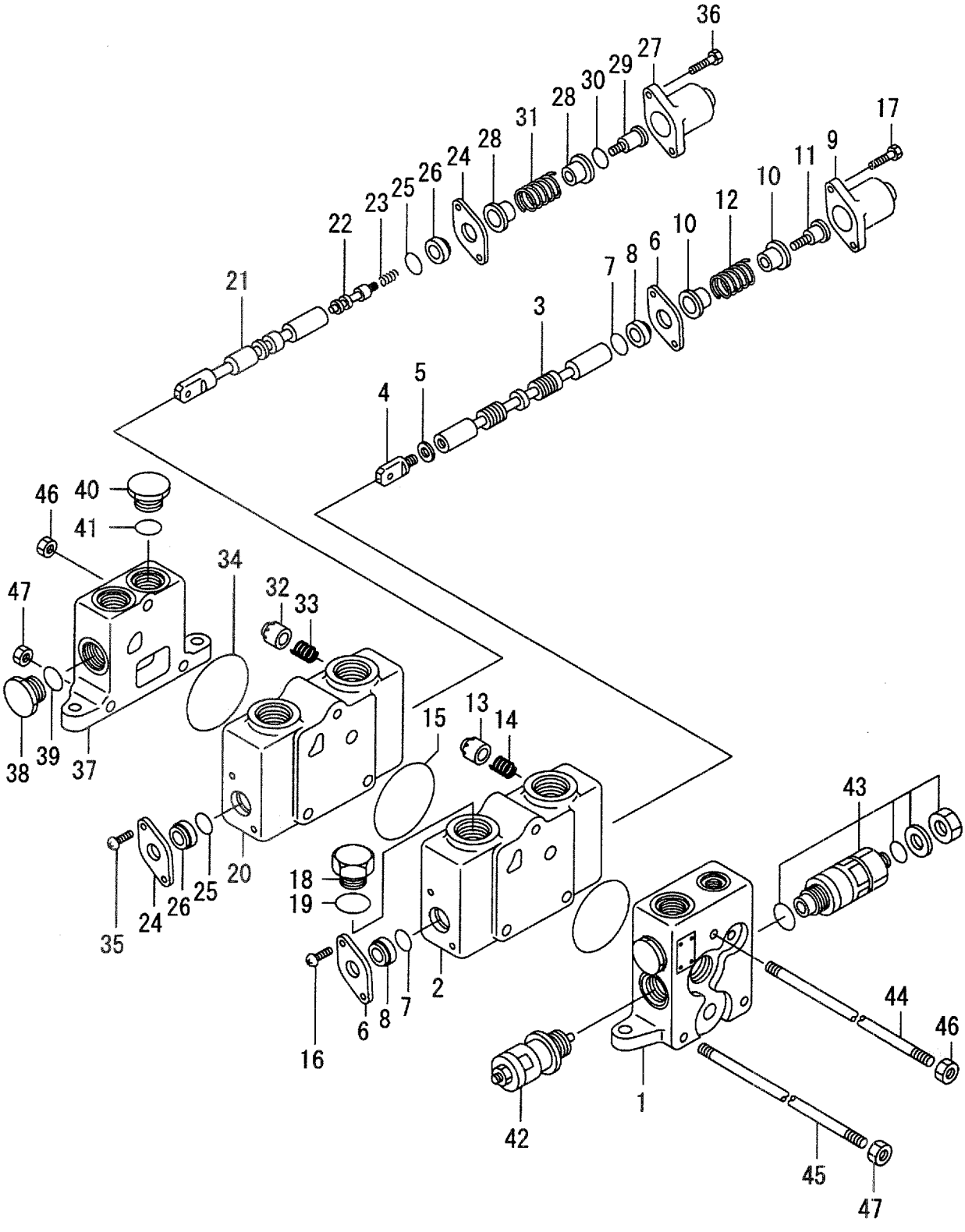

A:FD35C8:1-490 D:FD40T8:1-490 G:FD50T8:1-172 K:FG45T8:1-171
B:FD35T8:1-490 E:FD45C8:1-490 H:FG35T8:1-171 L:FG50T8:1-106
C:FD40C8:1-490 F:FD45T8:1-490 J:FG40T8:1-171

FIG.110
(F4047310)

Item No	Part No.	Mark	Description		Req'd	Remarks : Serial No.
A1	235C7-30201		VALVE-ASSY,CONTROL	ｺﾝﾄﾛｰﾙﾊﾞﾙﾌﾞｱｯｾﾝ	1	[2SV] INC.1-47
1	B-C0028-01601		SECTION,INLET	ｲﾝﾚｯﾄｾｸｼｮﾝ	1	[2SV]
A2	B-21013-40666		SECTION-ASSY,SPOOL	ｽﾌﾟｰﾙｾｸｼｮﾝｱｯｾﾝ	1	[2SV] INC.2-19
2	NO PART NO.	#	HOUSING	ﾊｳｼﾞﾝｸﾞ	1	[2SV]
3	NO PART NO.	#	SPOOL	ｽﾌﾟｰﾙ	1	[2SV]
4	B-21011-40601		HEAD	ﾍｯﾄﾞ	1	[2SV]
5	B-94101-10252		WASHER	ﾜｯｼｬ	1	[2SV]
6	B-21111-40602		PLATE	ﾌﾟﾚｰﾄ	2	[2SV]
7	B-21001-00690	*	O-RING	Oﾘﾝｸﾞ	2	[2SV]
8	B-21111-43001	*	WIPER	ﾜｲﾊﾟ	2	[2SV]
9	NO PART NO.	#*	CAP	ｷｬｯﾌﾟ	1	[2SV]
10	B-21111-40706	*	SEAT	ｼｰﾄ	2	[2SV]
11	B-21111-40407	*	SCREW	ｽｸﾘｭ	1	[2SV]
12	B-21111-40504	*	SPRING	ｽﾌﾟﾘﾝｸﾞ	1	[2SV]
13	B-21011-40701	*	POPPET	ﾎﾟﾍﾟｯﾄ	1	[2SV]
14	B-21011-40801	*	SPRING	ｽﾌﾟﾘﾝｸﾞ	1	[2SV]
15	B-21001-00334	*	O-RING	Oﾘﾝｸﾞ	1	[2SV]
16	B-91111-60102		SCREW	ｽｸﾘｭ	2	[2SV]
17	B-92702-06221	*	BOLT	ﾎﾞﾙﾄ	2	[2SV]
18	B-21001-00212		PLUG	ﾌﾟﾗｸﾞ	1	[2SV]
19	B-21001-00213		O-RING	Oﾘﾝｸﾞ	1	[2SV]
A3	B-21013-41868		SECTION-ASSY,SPOOL	ｽﾌﾟｰﾙｾｸｼｮﾝｱｯｾﾝ	1	[2SV] INC.20-36
20	NO PART NO.	#	HOUSING	ﾊｳｼﾞﾝｸﾞ	1	[2SV]
21	NO PART NO.	#	SPOOL	ｽﾌﾟｰﾙ	1	[2SV]
22	NO PART NO.	#	POPPET	ﾎﾟﾍﾟｯﾄ	1	[2SV]
23	B-21011-40827		SPRING	ｽﾌﾟﾘﾝｸﾞ	1	[2SV]
24	B-21111-40602		PLATE	ﾌﾟﾚｰﾄ	1	[2SV]
25	B-21001-00690	*	O-RING	Oﾘﾝｸﾞ	2	[2SV]
26	B-21111-43001	*	WIPER	ﾜｲﾊﾟ	2	[2SV]
27	NO PART NO.	#*	CAP	ｷｬｯﾌﾟ	1	[2SV]
28	B-21111-40708		SEAT	ｼｰﾄ	2	[2SV]
29	B-21011-42001		SCREW	ｽｸﾘｭ	1	[2SV]
30	B-21001-00266	*	O-RING	Oﾘﾝｸﾞ	1	[2SV]
31	B-21111-40504		SPRING	ｽﾌﾟﾘﾝｸﾞ	1	[2SV]
32	B-21011-40701	*	POPPET	ﾎﾟﾍﾟｯﾄ	1	[2SV]
33	B-21011-40801	*	SPRING	ｽﾌﾟﾘﾝｸﾞ	1	[2SV]
34	B-21001-00334	*	O-RING	Oﾘﾝｸﾞ	1	[2SV]
35	B-91111-60102		SCREW	ｽｸﾘｭ	2	[2SV]
36	B-92702-06221	*	BOLT	ﾎﾞﾙﾄ	2	[2SV]
A4	B-21013-40402		SECTION-ASSY,OUTLET	ｱｳﾄﾚｯﾄｾｸｼｮﾝｱｯｾﾝ	1	[2SV] INC.37-41
37	NO PART NO.	#	HOUSING	ﾊｳｼﾞﾝｸﾞ	1	[2SV]
38	B-21001-00258		PLUG	ﾌﾟﾗｸﾞ	1	[2SV]
39	B-21001-00098		O-RING	Oﾘﾝｸﾞ	1	[2SV]
40	B-21001-00212		PLUG	ﾌﾟﾗｸﾞ	1	[2SV]
41	B-21001-00213		O-RING	Oﾘﾝｸﾞ	1	[2SV]
42	B-21113-40058		VALVE,RELIEF	ﾊﾞﾙﾌﾞ	1	[2SV]
43	B-21013-30664		VALVE,RELIEF	ﾊﾞﾙﾌﾞ	1	[2SV]
44	B-21021-40402		ROD,TIE	ﾛｯﾄﾞ	1	[2SV]
45	B-21021-40401		ROD,TIE	ﾛｯﾄﾞ	2	[2SV]
46	B-21001-00333		NUT	ﾅｯﾄ	2	[2SV]

FIG.110 CONTROL VALVE [2SV]

(F4047310) コントロールバルブ

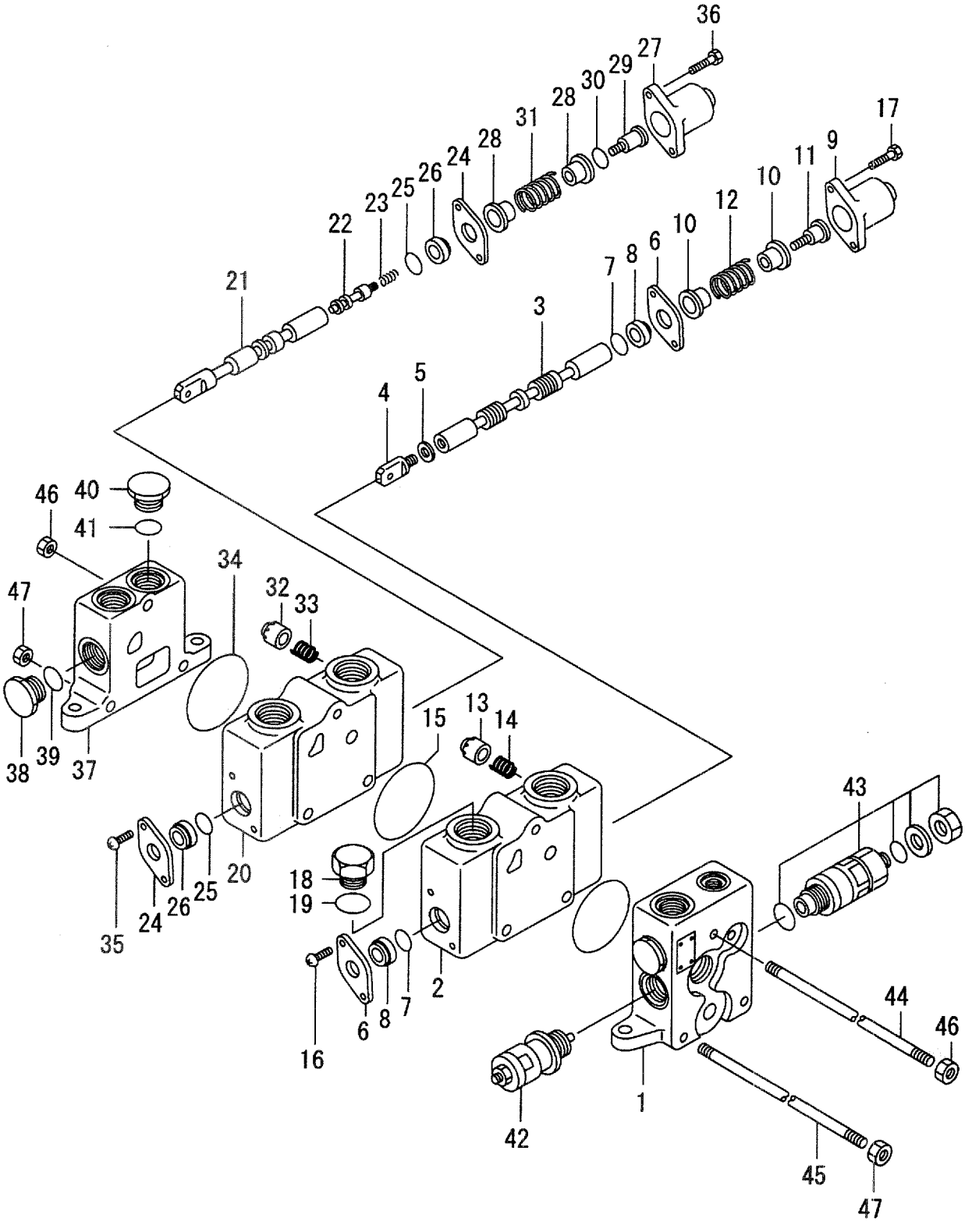

A:FD35C8:1-490 D:FD40T8:1-490 G:FD50T8:1-172 K:FG45T8:1-171
B:FD35T8:1-490 E:FD45C8:1-490 H:FG35T8:1-171 L:FG50T8:1-106
C:FD40C8:1-490 F:FD45T8:1-490 J:FG40T8:1-171

FIG.110
(F4047310)

Item No	Part No.	Mark	Description		Req'd	Remarks : Serial No.
47	B-21001-00332		NUT	ﾅｯﾄ	4	[2SV]
K1	B-2101A-40001		KIT,SEAL	ｼｰﾙｷｯﾄ	1	[2SV] INC.7,8,15
K2	B-21003-40010		KIT,CAP	ｷｬｯﾌﾟｷｯﾄ	1	[2SV] INC.9,17
K3	B-21003-40071		KIT,END,SPOOL	ｽﾌﾟｰﾙｴﾝﾄﾞｷｯﾄ	1	[2SV] INC.10-12
K4	B-21003-40072		KIT,CHECK	ﾁｪｯｸｷｯﾄ	1	[2SV] INC.13,14
K5	B-2101A-40002		KIT,SEAL	ｼｰﾙｷｯﾄ	1	[2SV] INC.25,26,30,34
K6	B-21003-40010		KIT,CAP	ｷｬｯﾌﾟｷｯﾄ	1	[2SV] INC.27,36
K7	B-21003-40072		KIT,CHECK	ﾁｪｯｸｷｯﾄ	1	[2SV] INC.32,33

FIG.110A CONTROL VALVE [2SV]

(F4047311) コントロールバルブ

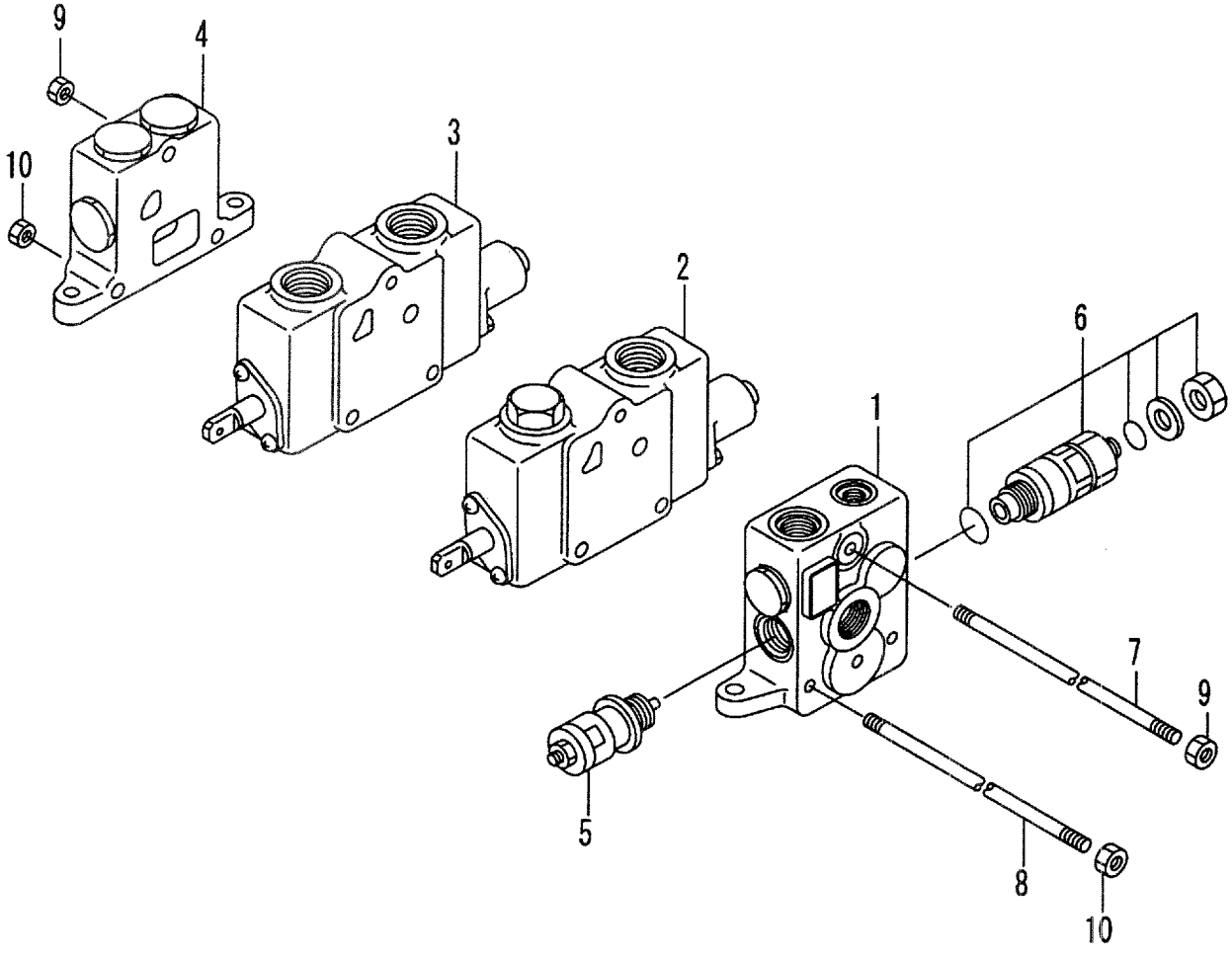

A:FD35C8:491- D:FD40T8:491- G:FD50T8:173- K:FG45T8:172-
B:FD35T8:491- E:FD45C8:491- H:FG35T8:172- L:FG50T8:107-
C:FD40C8:491- F:FD45T8:491- J:FG40T8:172-

FIG.110A
(F4047311)

Item No	Part No.	Mark	Description		Req'd	Remarks : Serial No.
A1	235C7-30202		VALVE-ASSY,CONTROL	ｺﾝﾄﾛｰﾙﾊﾞﾙﾌﾞｱｯｾﾝ	1	INC.1-10
1	B-C0013-40006		SECTION,INLET	ｲﾝﾚｯﾄｾｸｼｮﾝ	1	SEE FIG.120
2	B-21013-40666		SECTION,SPOOL(LIFT)	ｽﾌﾟｰﾙｾｸｼｮﾝ	1	SEE FIG.121
3	B-C0013-41049		SECTION,SPOOL(TILT)	ｽﾌﾟｰﾙｾｸｼｮﾝ	1	SEE FIG.122
4	B-21013-40402		SECTION,OUTLET	ｱｳﾄﾚｯﾄｾｸｼｮﾝ	1	SEE FIG.124
5	B-21113-40058		VALVE,RELIEF	ﾊﾞﾙﾌﾞ	1	
6	B-21013-30664		VALVE,RELIEF	ﾊﾞﾙﾌﾞ	1	
7	B-21021-40402		ROD,TIE	ﾛｯﾄﾞ	1	
8	B-21021-40401		ROD,TIE	ﾛｯﾄﾞ	2	
9	B-21001-00333		NUT	ﾅｯﾄ	2	
10	B-21001-00332		NUT	ﾅｯﾄ	4	

FIG.111 CONTROL VALVE [3SV]

(F4047320) コントロールバルブ

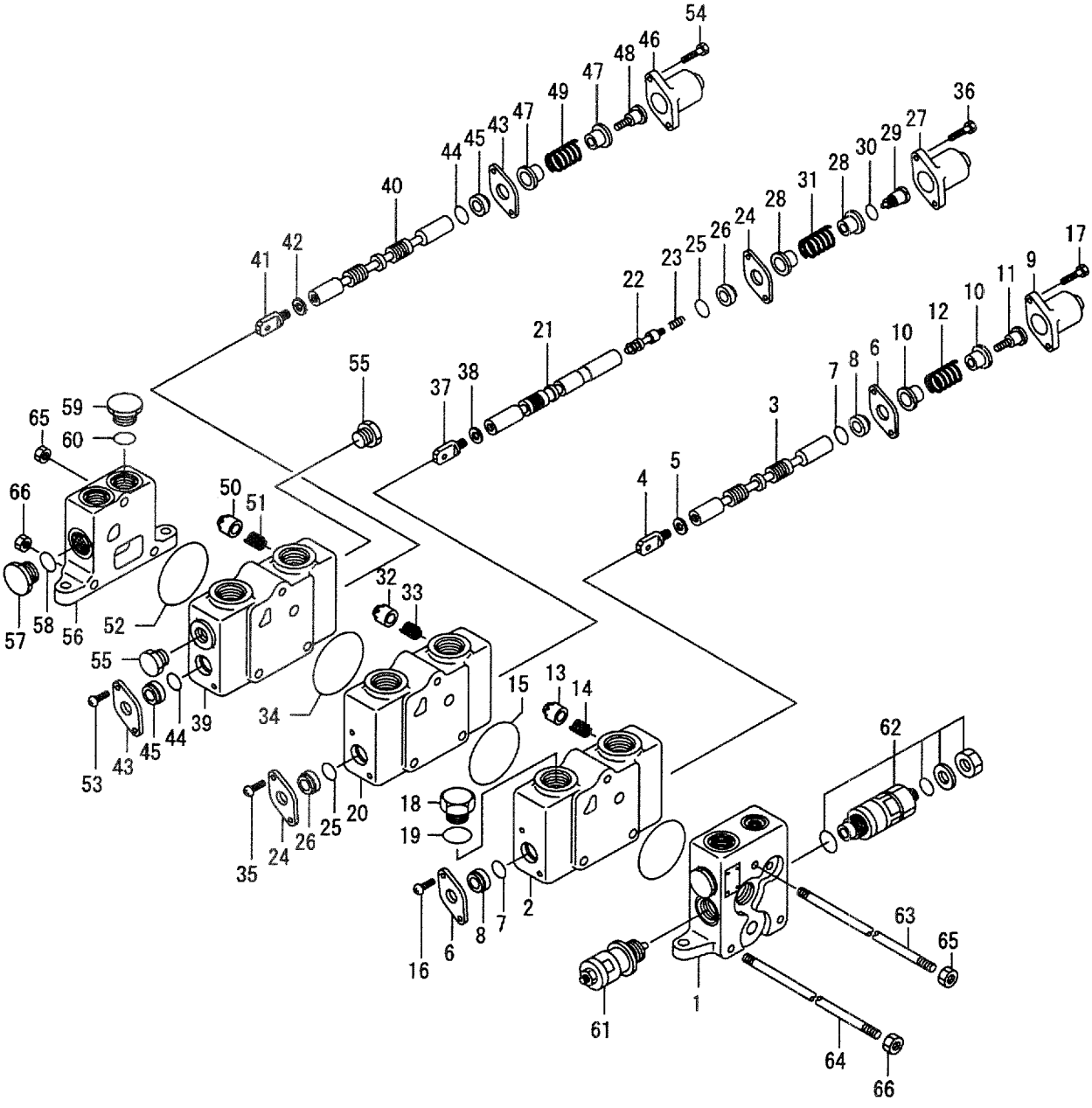

A:FD35C8:1-490 D:FD40T8:1-490 G:FD50T8:1-172 K:FG45T8:1-171
B:FD35T8:1-490 E:FD45C8:1-490 H:FG35T8:1-171 L:FG50T8:1-106
C:FD40C8:1-490 F:FD45T8:1-490 J:FG40T8:1-171

FIG.111
(F4047320)

Item No	Part No.	Mark	Description		Req'd	Remarks : Serial No.
A1	235C7-30301		VALVE-ASSY,CONTROL	ｺﾝﾄﾛｰﾙﾊﾞﾙﾌﾞｱｯｾﾝ	1	[3SV] INC.1-66
1	B-C0013-40004		SECTION,INLET	ｲﾝﾚｯﾄｾｸｼｮﾝ	1	[3SV]
A2	B-21013-40666		SECTION-ASSY,SPOOL	ｽﾌﾟｰﾙｾｸｼｮﾝｱｯｾﾝ	1	[3SV] INC.2-19
2	NO PART NO.	#	HOUSING	ﾊｳｼﾞﾝｸﾞ	1	[3SV]
3	NO PART NO.	#	SPOOL	ｽﾌﾟｰﾙ	1	[3SV]
4	B-21011-40601		HEAD	ﾍｯﾄﾞ	1	[3SV]
5	B-94101-10252		WASHER	ﾜｯｼｬ	1	[3SV]
6	B-21111-40602		PLATE	ﾌﾟﾚｰﾄ	2	[3SV]
7	B-21001-00690	*	O-RING	Oﾘﾝｸﾞ	2	[3SV]
8	B-21111-43001	*	WIPER	ﾜｲﾊﾟ	2	[3SV]
9	NO PART NO.	#*	CAP	ｷｬｯﾌﾟ	1	[3SV]
10	B-21111-40706	*	SEAT	ｼｰﾄ	2	[3SV]
11	B-21111-40407	*	SCREW	ｽｸﾘｭ	1	[3SV]
12	B-21111-40504	*	SPRING	ｽﾌﾟﾘﾝｸﾞ	1	[3SV]
13	B-21011-40701	*	POPPET	ﾎﾟﾍﾟｯﾄ	1	[3SV]
14	B-21011-40801	*	SPRING	ｽﾌﾟﾘﾝｸﾞ	1	[3SV]
15	B-21001-00334	*	O-RING	Oﾘﾝｸﾞ	1	[3SV]
16	B-91111-60102		SCREW	ｽｸﾘｭ	2	[3SV]
17	B-92702-06221	*	BOLT	ﾎﾞﾙﾄ	2	[3SV]
18	B-21001-00212		PLUG	ﾌﾟﾗｸﾞ	1	[3SV]
19	B-21001-00213		O-RING	Oﾘﾝｸﾞ	1	[3SV]
A3	B-C0013-41008		SECTION-ASSY,SPOOL	ｽﾌﾟｰﾙｾｸｼｮﾝｱｯｾﾝ	1	[3SV] INC.20-38
20	NO PART NO.	#	HOUSING	ﾊｳｼﾞﾝｸﾞ	1	[3SV]
21	NO PART NO.	#	SPOOL	ｽﾌﾟｰﾙ	1	[3SV]
22	B-21011-40727		POPPET	ﾎﾟﾍﾟｯﾄ	1	[3SV]
23	B-21011-40840		SPRING	ｽﾌﾟﾘﾝｸﾞ	1	[3SV]
24	B-21111-40602		PLATE	ﾌﾟﾚｰﾄ	1	[3SV]
25	B-21001-00690	*	O-RING	Oﾘﾝｸﾞ	2	[3SV]
26	B-21111-43001	*	WIPER	ﾜｲﾊﾟ	2	[3SV]
27	B-21111-40907	*	CAP	ｷｬｯﾌﾟ	1	[3SV]
28	B-21111-40708		SEAT	ｼｰﾄ	2	[3SV]
29	B-21011-42009		SCREW	ｽｸﾘｭ	1	[3SV]
30	B-21001-00266	*	O-RING	Oﾘﾝｸﾞ	1	[3SV]
31	B-21111-40504		SPRING	ｽﾌﾟﾘﾝｸﾞ	1	[3SV]
32	B-21011-40701	*	POPPET	ﾎﾟﾍﾟｯﾄ	1	[3SV]
33	B-21011-40801	*	SPRING	ｽﾌﾟﾘﾝｸﾞ	1	[3SV]
34	B-21001-00334	*	O-RING	Oﾘﾝｸﾞ	1	[3SV]
35	B-91111-60102		SCREW	ｽｸﾘｭ	2	[3SV]
36	B-97703-00221	*	BOLT	ﾎﾞﾙﾄ	2	[3SV]
37	B-21011-40601		HEAD	ﾍｯﾄﾞ	1	[3SV]
38	B-94101-10252		WASHER	ﾜｯｼｬ	1	[3SV]
A4	B-21013-47307		SECTION-ASSY,PLUNGER	ﾌﾟﾗﾝｼﾞｬｾｸｼｮﾝｱｯｾﾝ	1	[3SV] INC.39-54
39	NO PART NO.	#	HOUSING	ﾊｳｼﾞﾝｸﾞ	1	[3SV]
40	NO PART NO.	#	SPOOL	ｽﾌﾟｰﾙ	1	[3SV]
41	B-21011-40601		HEAD	ﾍｯﾄﾞ	1	[3SV]
42	B-94101-10252		WASHER	ﾜｯｼｬ	1	[3SV]
43	B-21111-40602		PLATE	ﾌﾟﾚｰﾄ	2	[3SV]
44	B-21001-00690		O-RING	Oﾘﾝｸﾞ	2	[3SV]
45	B-21111-43001		WIPER	ﾜｲﾊﾟ	2	[3SV]

FIG.111 CONTROL VALVE [3SV]

(F4047320) コントロールバルブ

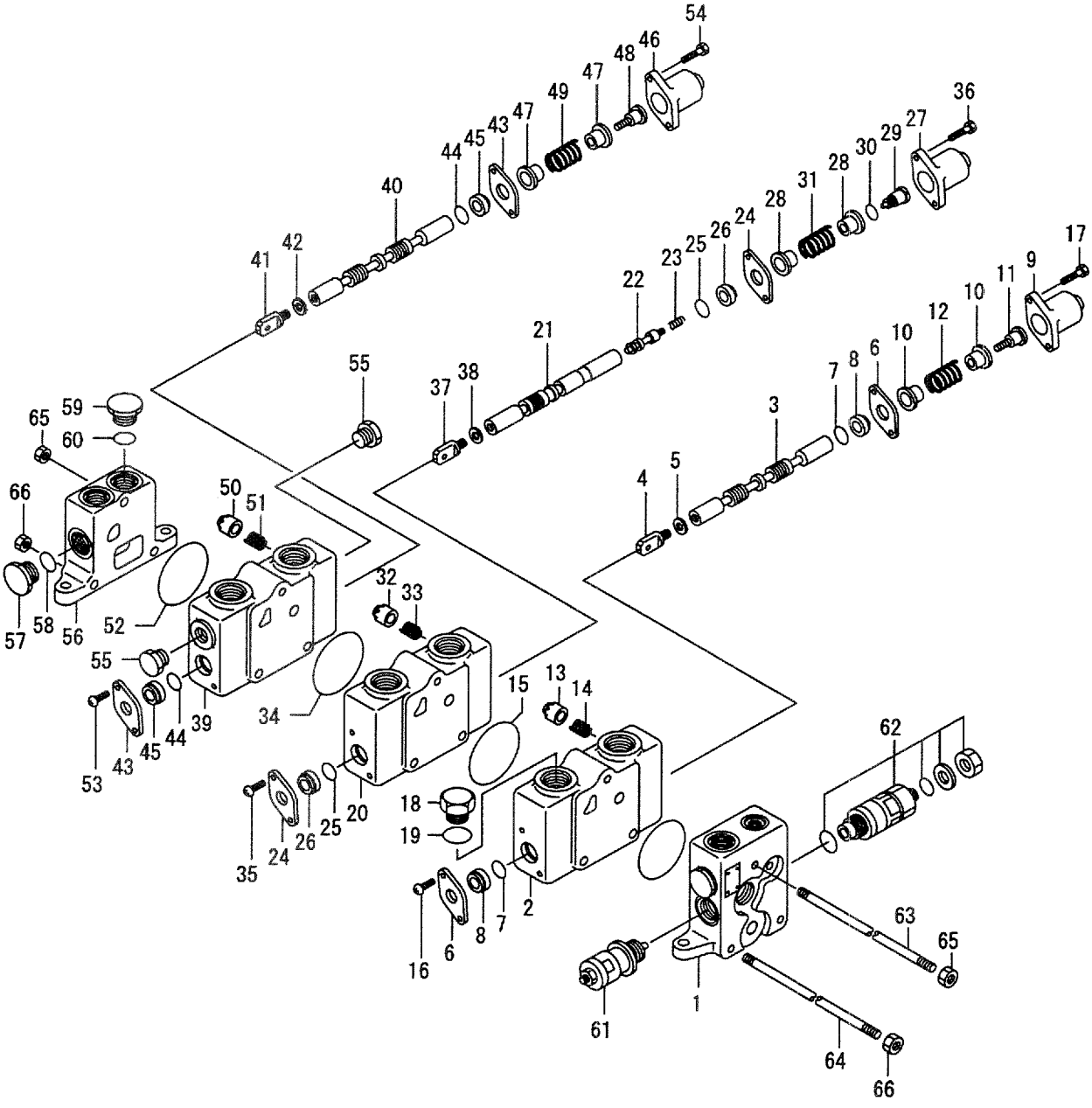

A:FD35C8:1-490 D:FD40T8:1-490 G:FD50T8:1-172 K:FG45T8:1-171
B:FD35T8:1-490 E:FD45C8:1-490 H:FG35T8:1-171 L:FG50T8:1-106
C:FD40C8:1-490 F:FD45T8:1-490 J:FG40T8:1-171

FIG.111
(F4047320)

Item No	Part No.	Mark	Description		Req'd	Remarks : Serial No.
46	B-21111-40907		CAP	ｷｬｯﾌﾟ	1	[3SV]
47	B-21111-40706		SEAT	ｼｰﾄ	2	[3SV]
48	B-21111-40407		SCREW	ｽｸﾘｭ	1	[3SV]
49	B-21111-40504		SPRING	ｽﾌﾟﾘﾝｸﾞ	1	[3SV]
50	B-21011-40701		POPPET	ﾎﾟﾍﾟｯﾄ	1	[3SV]
51	B-21011-40801		SPRING	ｽﾌﾟﾘﾝｸﾞ	1	[3SV]
52	B-21001-00334		O-RING	Oﾘﾝｸﾞ	1	[3SV]
53	B-91111-60102		SCREW	ｽｸﾘｭ	2	[3SV]
54	B-92702-06221		BOLT	ﾎﾞﾙﾄ	2	[3SV]
55	B-21113-40308		PLUG	ﾌﾟﾗｸﾞ	2	[3SV]
A5	B-21013-40402		SECTION-ASSY,OUTLET	ｱｳﾄﾚｯﾄｾｸｼｮﾝｱｯｾﾝ	1	[3SV] INC.56-60
56	NO PART NO.	#	HOUSING	ﾊｳｼﾞﾝｸﾞ	1	[3SV]
57	B-21001-00258		PLUG	ﾌﾟﾗｸﾞ	1	[3SV]
58	B-21001-00098		O-RING	Oﾘﾝｸﾞ	1	[3SV]
59	B-21001-00212		PLUG	ﾌﾟﾗｸﾞ	1	[3SV]
60	B-21001-00213		O-RING	Oﾘﾝｸﾞ	1	[3SV]
61	B-21113-40058		VALVE,RELIEF	ﾊﾞﾙﾌﾞ	1	[3SV]
62	B-21013-30664		VALVE,RELIEF	ﾊﾞﾙﾌﾞ	1	[3SV]
63	B-21031-40402		ROD,TIE	ﾛｯﾄﾞ	1	[3SV]
64	B-21031-40401		ROD,TIE	ﾛｯﾄﾞ	2	[3SV]
65	B-21001-00333		NUT	ﾅｯﾄ	2	[3SV]
66	B-21001-00332		NUT	ﾅｯﾄ	4	[3SV]
K1	B-2101A-40001		KIT,SEAL	ｼｰﾙｷｯﾄ	1	[3SV] INC.7,8,15
K2	B-21003-40010		KIT,CAP	ｷｬｯﾌﾟｷｯﾄ	1	[3SV] INC.9,17
K3	B-21003-40071		KIT,END,SPOOL	ｽﾌﾟｰﾙｴﾝﾄﾞｷｯﾄ	1	[3SV] INC.10-12
K4	B-21003-40072		KIT,CHECK	ﾁｪｯｸｷｯﾄ	1	[3SV] INC.13,14
K5	B-2101A-40002		KIT,SEAL	ｼｰﾙｷｯﾄ	1	[3SV] INC.25,26,30,34
K6	B-21003-40072		KIT,CHECK	ﾁｪｯｸｷｯﾄ	1	[3SV] INC.32,33

FIG.111A CONTROL VALVE [3SV]

(F4047321) コントロールバルブ

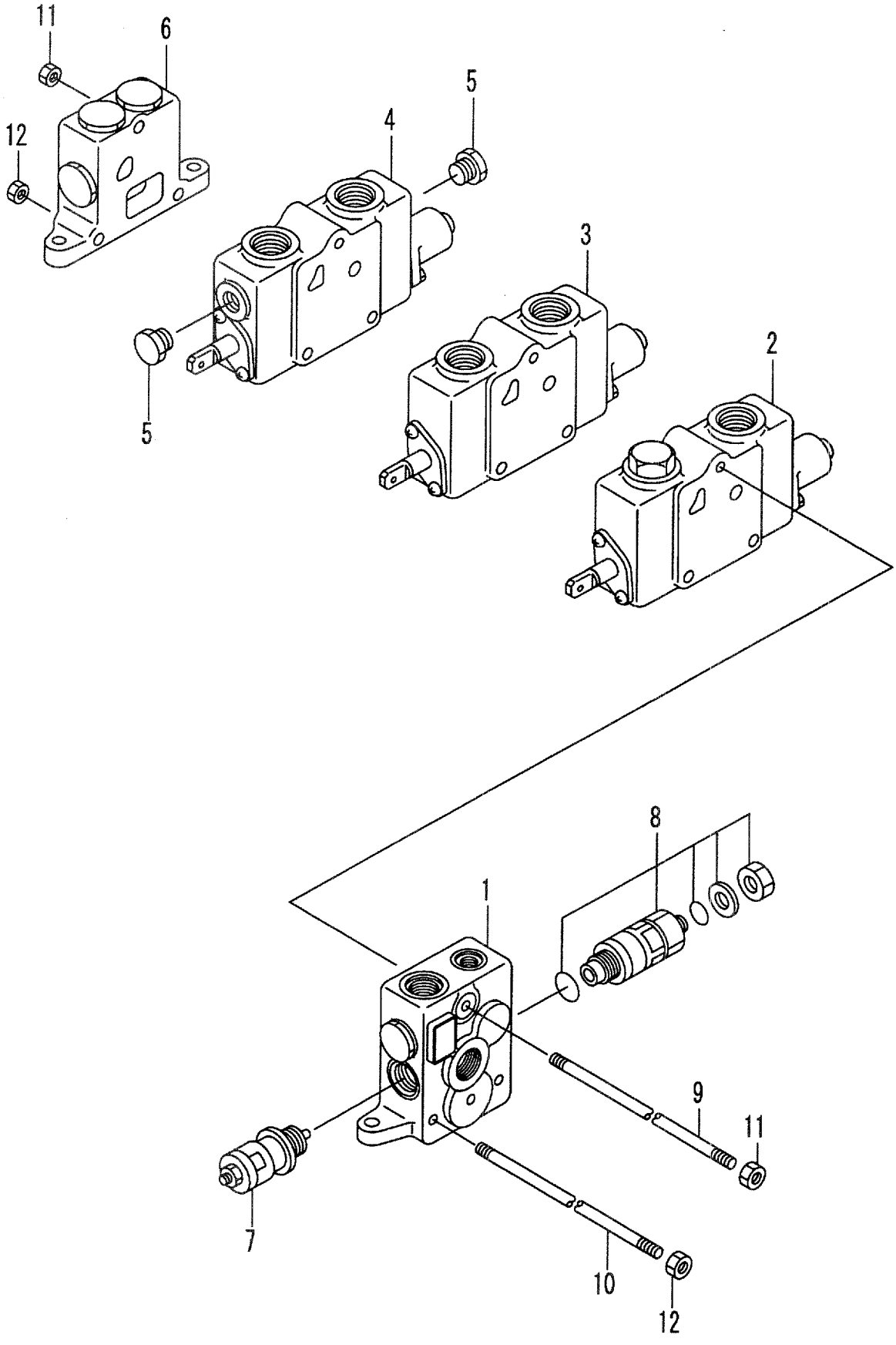

A:FD35C8:491- D:FD40T8:491- G:FD50T8:173- K:FG45T8:172-
B:FD35T8:491- E:FD45C8:491- H:FG35T8:172- L:FG50T8:107-
C:FD40C8:491- F:FD45T8:491- J:FG40T8:172-

FIG.111A

(F4047321)

Item No	Part No.	Mark	Description		Req'd	Remarks : Serial No.
A1	235C7-30302		VALVE-ASSY,CONTROL	ｺﾝﾄﾛｰﾙﾊﾞﾙﾌﾞｱｯｾﾝ	1	[3SV] INC.1-12
1	B-C0013-40006		SECTION,INLET	ｲﾝﾚｯﾄｾｸｼｮﾝ	1	[3SV]SEE FIG.120
2	B-21013-40666		SECTION,SPOOL(LIFT)	ｽﾌﾟｰﾙｾｸｼｮﾝ	1	[3SV]SEE FIG.121
3	B-C0013-41049		SECTION,SPOOL(TILT)	ｽﾌﾟｰﾙｾｸｼｮﾝ	1	[3SV]SEE FIG.122
4	B-21013-47307		SECTION,SPOOL(ATT)	ｽﾌﾟｰﾙｾｸｼｮﾝ	1	[3SV]SEE FIG.123
5	B-21113-40308		PLUG	ﾌﾟﾗｸﾞ	2	[3SV]
6	B-21013-40402		SECTION,OUTLET	ｱｳﾄﾚｯﾄｾｸｼｮﾝ	1	[3SV]SEE FIG.124
7	B-21113-40058		VALVE,RELIEF	ﾊﾞﾙﾌﾞ	1	[3SV]
8	B-21013-30664		VALVE,RELIEF	ﾊﾞﾙﾌﾞ	1	[3SV]
9	B-21031-40402		ROD,TIE	ﾛｯﾄﾞ	1	[3SV]
10	B-21031-40401		ROD,TIE	ﾛｯﾄﾞ	2	[3SV]
11	B-21001-00333		NUT	ﾅｯﾄ	2	[3SV]
12	B-21001-00332		NUT	ﾅｯﾄ	4	[3SV]

FIG.112 CONTROL VALVE [4SV]

(F4047330) コントロールバルブ

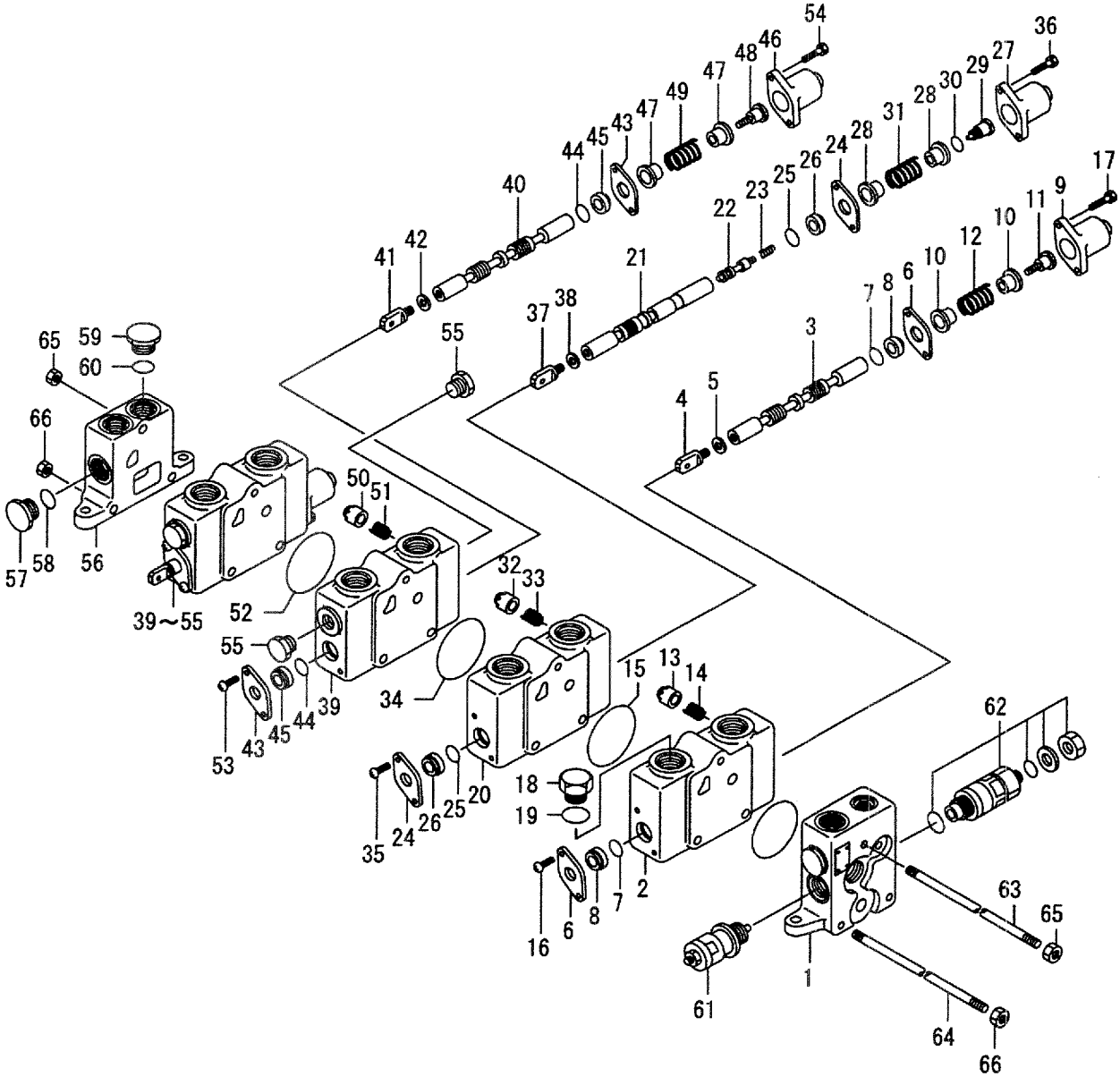

A:FD35C8:1-490 D:FD40T8:1-490 G:FD50T8:1-172 K:FG45T8:1-171
B:FD35T8:1-490 E:FD45C8:1-490 H:FG35T8:1-171 L:FG50T8:1-106
C:FD40C8:1-490 F:FD45T8:1-490 J:FG40T8:1-171

FIG.112
(F4047330)

Item No	Part No.	Mark	Description		Req'd	Remarks : Serial No.
A1	235C7-30401		VALVE-ASSY,CONTROL	ｺﾝﾄﾛｰﾙﾊﾞﾙﾌﾞｱｯｾﾝ	1	[4SV] INC.1-66
1	B-C0013-40004		SECTION,INLET	ｲﾝﾚｯﾄｾｸｼｮﾝ	1	[4SV]
A2	B-21013-40666		SECTION-ASSY,SPOOL	ｽﾌﾟｰﾙｾｸｼｮﾝｱｯｾﾝ	1	[4SV] INC.2-19
2	NO PART NO.	#	HOUSING	ﾊｳｼﾞﾝｸﾞ	1	[4SV]
3	NO PART NO.	#	SPOOL	ｽﾌﾟｰﾙ	1	[4SV]
4	B-21011-40601		HEAD	ﾍｯﾄﾞ	1	[4SV]
5	B-94101-10252		WASHER	ﾜｯｼｬ	1	[4SV]
6	B-21111-40602		PLATE	ﾌﾟﾚｰﾄ	2	[4SV]
7	B-21001-00690	*	O-RING	Oﾘﾝｸﾞ	2	[4SV]
8	B-21111-43001	*	WIPER	ﾜｲﾊﾟ	2	[4SV]
9	NO PART NO.	#*	CAP	ｷｬｯﾌﾟ	1	[4SV]
10	B-21111-40706	*	SEAT	ｼｰﾄ	2	[4SV]
11	B-21111-40407	*	SCREW	ｽｸﾘｭ	1	[4SV]
12	B-21111-40504	*	SPRING	ｽﾌﾟﾘﾝｸﾞ	1	[4SV]
13	B-21011-40701	*	POPPET	ﾎﾟﾍﾟｯﾄ	1	[4SV]
14	B-21011-40801	*	SPRING	ｽﾌﾟﾘﾝｸﾞ	1	[4SV]
15	B-21001-00334	*	O-RING	Oﾘﾝｸﾞ	1	[4SV]
16	B-91111-60102		SCREW	ｽｸﾘｭ	2	[4SV]
17	B-92702-06221	*	BOLT	ﾎﾞﾙﾄ	2	[4SV]
18	B-21001-00212		PLUG	ﾌﾟﾗｸﾞ	1	[4SV]
19	B-21001-00213		O-RING	Oﾘﾝｸﾞ	1	[4SV]
A3	B-C0013-41008		SECTION-ASSY,SPOOL	ｽﾌﾟｰﾙｾｸｼｮﾝｱｯｾﾝ	1	[4SV] INC.20-38
20	NO PART NO.	#	HOUSING	ﾊｳｼﾞﾝｸﾞ	1	[4SV]
21	NO PART NO.	#	SPOOL	ｽﾌﾟｰﾙ	1	[4SV]
22	B-21011-40727		POPPET	ﾎﾟﾍﾟｯﾄ	1	[4SV]
23	B-21011-40840		SPRING	ｽﾌﾟﾘﾝｸﾞ	1	[4SV]
24	B-21111-40602		PLATE	ﾌﾟﾚｰﾄ	1	[4SV]
25	B-21001-00690	*	O-RING	Oﾘﾝｸﾞ	2	[4SV]
26	B-21111-43001	*	WIPER	ﾜｲﾊﾟ	2	[4SV]
27	B-21111-40907	*	CAP	ｷｬｯﾌﾟ	1	[4SV]
28	B-21111-40708		SEAT	ｼｰﾄ	2	[4SV]
29	B-21011-42009		SCREW	ｽｸﾘｭ	1	[4SV]
30	B-21001-00266	*	O-RING	Oﾘﾝｸﾞ	1	[4SV]
31	B-21111-40504		SPRING	ｽﾌﾟﾘﾝｸﾞ	1	[4SV]
32	B-21011-40701	*	POPPET	ﾎﾟﾍﾟｯﾄ	1	[4SV]
33	B-21011-40801	*	SPRING	ｽﾌﾟﾘﾝｸﾞ	1	[4SV]
34	B-21001-00334	*	O-RING	Oﾘﾝｸﾞ	1	[4SV]
35	B-91111-60102		SCREW	ｽｸﾘｭ	2	[4SV]
36	B-97703-00221	*	BOLT	ﾎﾞﾙﾄ	2	[4SV]
37	B-21011-40601		HEAD	ﾍｯﾄﾞ	1	[4SV]
38	B-94101-10252		WASHER	ﾜｯｼｬ	1	[4SV]
A4	B-21013-47307		SECTION-ASSY,PLUNGER	ﾌﾟﾗﾝｼﾞｬｾｸｼｮﾝｱｯｾﾝ	2	[4SV] INC.39-54
39	NO PART NO.	#	HOUSING	ﾊｳｼﾞﾝｸﾞ	2	[4SV]
40	NO PART NO.	#	SPOOL	ｽﾌﾟｰﾙ	2	[4SV]
41	B-21011-40601		HEAD	ﾍｯﾄﾞ	2	[4SV]
42	B-94101-10252		WASHER	ﾜｯｼｬ	2	[4SV]
43	B-21111-40602		PLATE	ﾌﾟﾚｰﾄ	4	[4SV]
44	B-21001-00690		O-RING	Oﾘﾝｸﾞ	4	[4SV]
45	B-21111-43001		WIPER	ﾜｲﾊﾟ	4	[4SV]

FIG.112 CONTROL VALVE [4SV]

(F4047330) コントロールバルブ

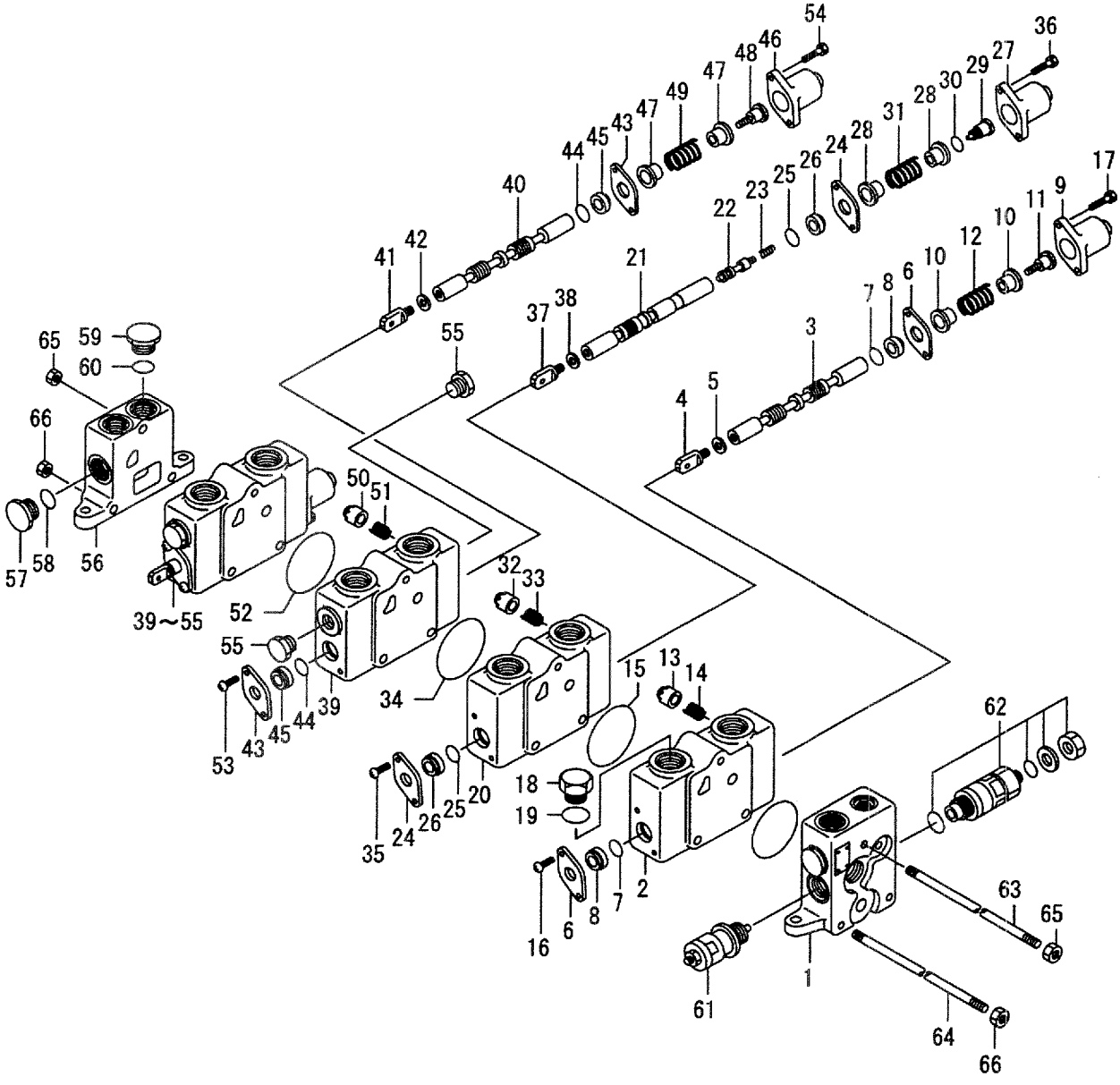

A:FD35C8:1-490 D:FD40T8:1-490 G:FD50T8:1-172 K:FG45T8:1-171
B:FD35T8:1-490 E:FD45C8:1-490 H:FG35T8:1-171 L:FG50T8:1-106
C:FD40C8:1-490 F:FD45T8:1-490 J:FG40T8:1-171

FIG.112
(F4047330)

Item No	Part No.	Mark	Description		Req'd	Remarks : Serial No.
46	B-21111-40907		CAP	ｷｬｯﾌﾟ	2	[4SV]
47	B-21111-40706		SEAT	ｼｰﾄ	4	[4SV]
48	B-21111-40407		SCREW	ｽｸﾘｭ	2	[4SV]
49	B-21111-40504		SPRING	ｽﾌﾟﾘﾝｸﾞ	2	[4SV]
50	B-21011-40701		POPPET	ﾎﾟﾍﾟｯﾄ	2	[4SV]
51	B-21011-40801		SPRING	ｽﾌﾟﾘﾝｸﾞ	2	[4SV]
52	B-21001-00334		O-RING	Oﾘﾝｸﾞ	2	[4SV]
53	B-91111-60102		SCREW	ｽｸﾘｭ	4	[4SV]
54	B-92702-06221		BOLT	ﾎﾞﾙﾄ	4	[4SV]
55	B-21113-40308		PLUG	ﾌﾟﾗｸﾞ	4	[4SV]
A5	B-21013-40402		SECTION-ASSY,OUTLET	ｱｳﾄﾚｯﾄｾｸｼｮﾝｱｯｾﾝ	1	[4SV] INC.56-60
56	NO PART NO.	#	HOUSING	ﾊｳｼﾞﾝｸﾞ	1	[4SV]
57	B-21001-00258		PLUG	ﾌﾟﾗｸﾞ	1	[4SV]
58	B-21001-00098		O-RING	Oﾘﾝｸﾞ	1	[4SV]
59	B-21001-00212		PLUG	ﾌﾟﾗｸﾞ	1	[4SV]
60	B-21001-00213		O-RING	Oﾘﾝｸﾞ	1	[4SV]
61	B-21113-40058		VALVE,RELIEF	ﾊﾞﾙﾌﾞ	1	[4SV]
62	B-21013-30664		VALVE,RELIEF	ﾊﾞﾙﾌﾞ	1	[4SV]
63	B-21041-40402		ROD,TIE	ﾛｯﾄﾞ	1	[4SV]
64	B-21041-40401		ROD,TIE	ﾛｯﾄﾞ	2	[4SV]
65	B-21001-00333		NUT	ﾅｯﾄ	2	[4SV]
66	B-21001-00332		NUT	ﾅｯﾄ	4	[4SV]
K1	B-2101A-40001		KIT,SEAL	ｼｰﾙｷｯﾄ	1	[4SV] INC.7,8,15
K2	B-21003-40010		KIT,CAP	ｷｬｯﾌﾟｷｯﾄ	1	[4SV] INC.9,17
K3	B-21003-40071		KIT,END,SPOOL	ｽﾌﾟｰﾙｴﾝﾄﾞｷｯﾄ	1	[4SV] INC.10-12
K4	B-21003-40072		KIT,CHECK	ﾁｪｯｸｷｯﾄ	1	[4SV] INC.13,14
K5	B-2101A-40002		KIT,SEAL	ｼｰﾙｷｯﾄ	1	[4SV] INC.25,26,30,34
K6	B-21003-40072		KIT,CHECK	ﾁｪｯｸｷｯﾄ	1	[4SV] INC.32,33

FIG.112A CONTROL VALVE [4SV]

(F4047331) コントロールバルブ

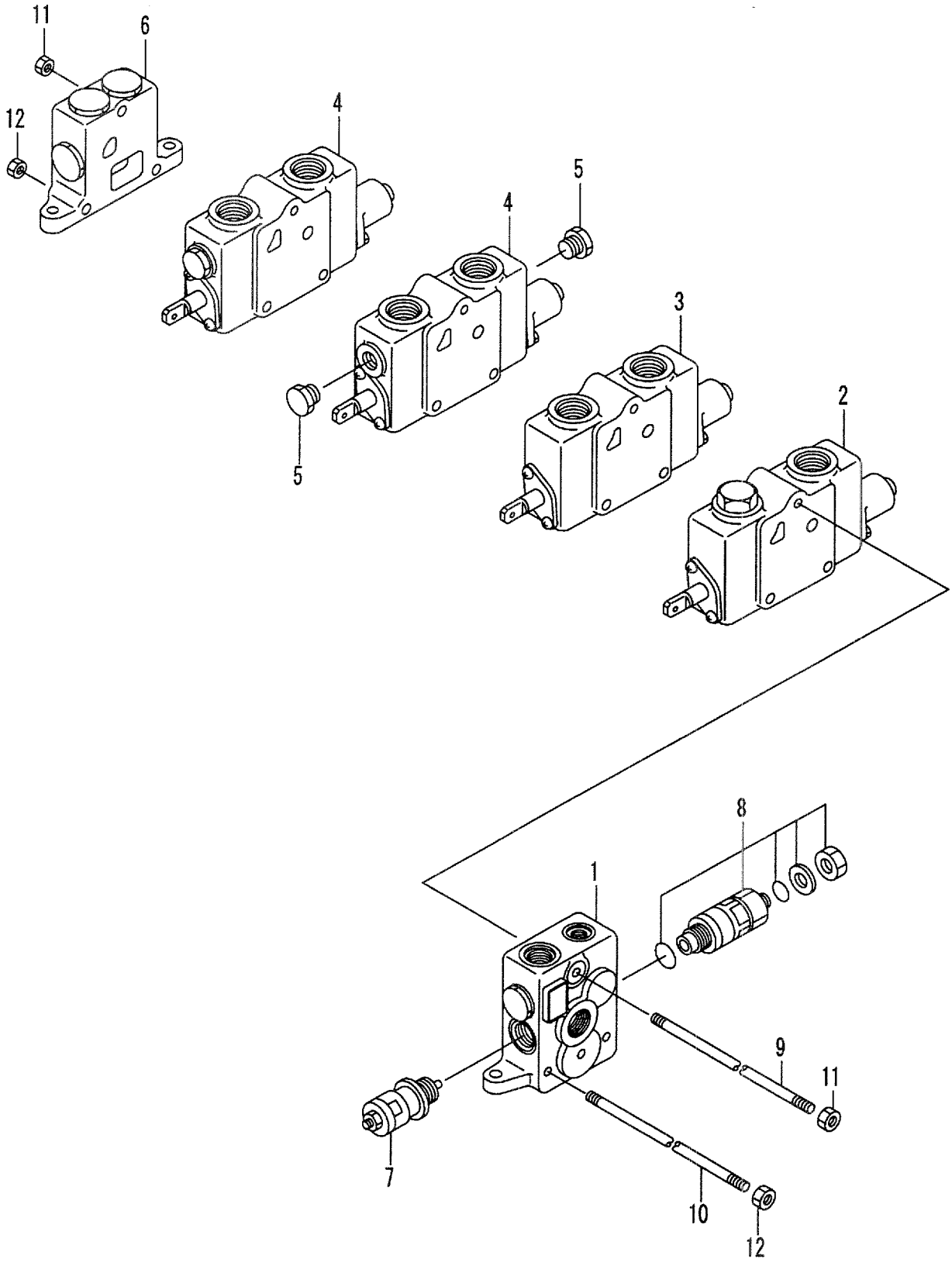

A:FD35C8:491- D:FD40T8:491- G:FD50T8:173- K:FG45T8:172-
B:FD35T8:491- E:FD45C8:491- H:FG35T8:172- L:FG50T8:107-
C:FD40C8:491- F:FD45T8:491- J:FG40T8:172-

FIG.112A
(F4047331)

Item No	Part No.	Mark	Description		Req'd	Remarks : Serial No.
A1	235C7-30402		VALVE-ASSY,CONTROL	ｺﾝﾄﾛｰﾙﾊﾞﾙﾌﾞｱｯｾﾝ	1	[4SV] INC.1-12
1	B-C0013-40006		SECTION,INLET	ｲﾝﾚｯﾄｾｸｼｮﾝ	1	[4SV]SEE FIG.120
2	B-21013-40666		SECTION,SPOOL(LIFT)	ｽﾌﾟｰﾙｾｸｼｮﾝ	1	[4SV]SEE FIG.121
3	B-C0013-41049		SECTION,SPOOL(TILT)	ｽﾌﾟｰﾙｾｸｼｮﾝ	1	[4SV]SEE FIG.122
4	B-21013-47307		SECTION,SPOOL(ATT)	ｽﾌﾟｰﾙｾｸｼｮﾝ	2	[4SV]SEE FIG.123
5	B-21113-40308		PLUG	ﾌﾟﾗｸﾞ	4	[4SV]
6	B-21013-40402		SECTION,OUTLET	ｱｳﾄﾚｯﾄｾｸｼｮﾝ	1	[4SV]SEE FIG.124
7	B-21113-40058		VALVE,RELIEF	ﾊﾞﾙﾌﾞ	1	[4SV]
8	B-21013-30664		VALVE,RELIEF	ﾊﾞﾙﾌﾞ	1	[4SV]
9	B-21041-40402		ROD,TIE	ﾛｯﾄﾞ	1	[4SV]
10	B-21041-40401		ROD,TIE	ﾛｯﾄﾞ	2	[4SV]
11	B-21001-00333		NUT	ﾅｯﾄ	2	[4SV]
12	B-21001-00332		NUT	ﾅｯﾄ	4	[4SV]

FIG.113 CONTROL VALVE [5SV]

(F4047340) コントロールバルブ

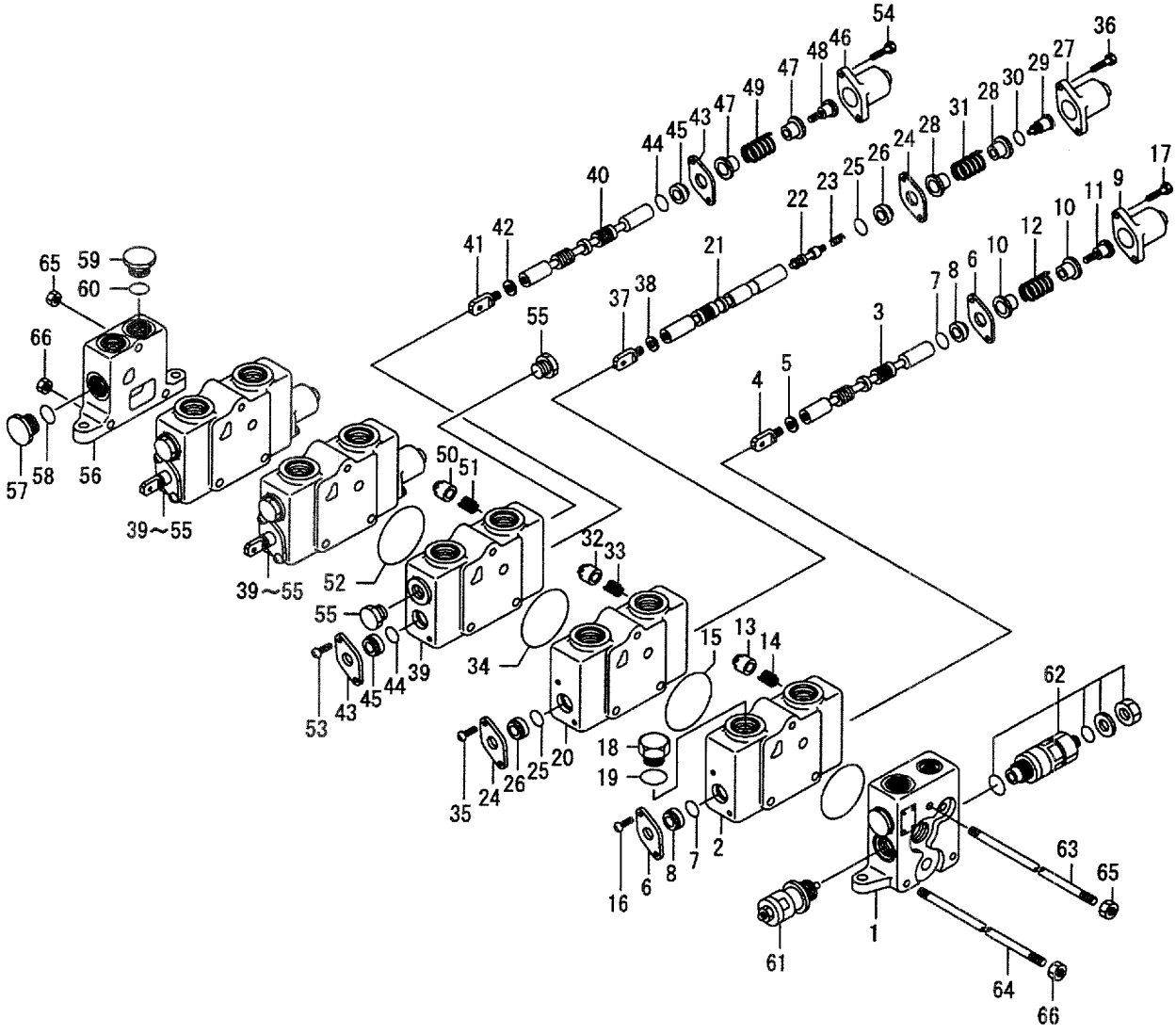

A:FD35C8:1-490 D:FD40T8:1-490 G:FD50T8:1-172 K:FG45T8:1-171
B:FD35T8:1-490 E:FD45C8:1-490 H:FG35T8:1-171 L:FG50T8:1-106
C:FD40C8:1-490 F:FD45T8:1-490 J:FG40T8:1-171

FIG.113
(F4047340)

Item No	Part No.	Mark	Description		Req'd	Remarks : Serial No.
A1	235C7-30501		VALVE-ASSY,CONTROL	ｺﾝﾄﾛｰﾙﾊﾞﾙﾌﾞｱｯｾﾝ	1	[5SV] INC.1-66
1	B-C0013-40004		SECTION,INLET	ｲﾝﾚｯﾄｾｸｼｮﾝ	1	[5SV]
A2	B-21013-40666		SECTION-ASSY,SPOOL	ｽﾌﾟｰﾙｾｸｼｮﾝｱｯｾﾝ	1	[5SV] INC.2-19
2	NO PART NO.	#	HOUSING	ﾊｳｼﾞﾝｸﾞ	1	[5SV]
3	NO PART NO.	#	SPOOL	ｽﾌﾟｰﾙ	1	[5SV]
4	B-21011-40601		HEAD	ﾍｯﾄﾞ	1	[5SV]
5	B-94101-10252		WASHER	ﾜｯｼｬ	1	[5SV]
6	B-21111-40602		PLATE	ﾌﾟﾚｰﾄ	2	[5SV]
7	B-21001-00690	*	O-RING	Oﾘﾝｸﾞ	2	[5SV]
8	B-21111-43001	*	WIPER	ﾜｲﾊﾟ	2	[5SV]
9	NO PART NO.	#*	CAP	ｷｬｯﾌﾟ	1	[5SV]
10	B-21111-40706	*	SEAT	ｼｰﾄ	2	[5SV]
11	B-21111-40407	*	SCREW	ｽｸﾘｭ	1	[5SV]
12	B-21111-40504	*	SPRING	ｽﾌﾟﾘﾝｸﾞ	1	[5SV]
13	B-21011-40701	*	POPPET	ﾎﾟﾍﾟｯﾄ	1	[5SV]
14	B-21011-40801	*	SPRING	ｽﾌﾟﾘﾝｸﾞ	1	[5SV]
15	B-21001-00334	*	O-RING	Oﾘﾝｸﾞ	1	[5SV]
16	B-91111-60102		SCREW	ｽｸﾘｭ	2	[5SV]
17	B-92702-06221	*	BOLT	ﾎﾞﾙﾄ	2	[5SV]
18	B-21001-00212		PLUG	ﾌﾟﾗｸﾞ	1	[5SV]
19	B-21001-00213		O-RING	Oﾘﾝｸﾞ	1	[5SV]
A3	B-C0013-41008		SECTION-ASSY,SPOOL	ｽﾌﾟｰﾙｾｸｼｮﾝｱｯｾﾝ	1	[5SV] INC.20-38
20	NO PART NO.	#	HOUSING	ﾊｳｼﾞﾝｸﾞ	1	[5SV]
21	NO PART NO.	#	SPOOL	ｽﾌﾟｰﾙ	1	[5SV]
22	B-21011-40727		POPPET	ﾎﾟﾍﾟｯﾄ	1	[5SV]
23	B-21011-40840		SPRING	ｽﾌﾟﾘﾝｸﾞ	1	[5SV]
24	B-21111-40602		PLATE	ﾌﾟﾚｰﾄ	1	[5SV]
25	B-21001-00690	*	O-RING	Oﾘﾝｸﾞ	2	[5SV]
26	B-21111-43001	*	WIPER	ﾜｲﾊﾟ	2	[5SV]
27	B-21111-40907	*	CAP	ｷｬｯﾌﾟ	1	[5SV]
28	B-21111-40708		SEAT	ｼｰﾄ	2	[5SV]
29	B-21011-42009		SCREW	ｽｸﾘｭ	1	[5SV]
30	B-21001-00266	*	O-RING	Oﾘﾝｸﾞ	1	[5SV]
31	B-21111-40504		SPRING	ｽﾌﾟﾘﾝｸﾞ	1	[5SV]
32	B-21011-40701	*	POPPET	ﾎﾟﾍﾟｯﾄ	1	[5SV]
33	B-21011-40801	*	SPRING	ｽﾌﾟﾘﾝｸﾞ	1	[5SV]
34	B-21001-00334	*	O-RING	Oﾘﾝｸﾞ	1	[5SV]
35	B-91111-60102		SCREW	ｽｸﾘｭ	2	[5SV]
36	B-97703-00221	*	BOLT	ﾎﾞﾙﾄ	2	[5SV]
37	B-21011-40601		HEAD	ﾍｯﾄﾞ	1	[5SV]
38	B-94101-10252		WASHER	ﾜｯｼｬ	1	[5SV]
A4	B-21013-47307		SECTION-ASSY,PLUNGER	ﾌﾟﾗﾝｼﾞｬｾｸｼｮﾝｱｯｾﾝ	3	[5SV] INC.39-54
39	NO PART NO.	#	HOUSING	ﾊｳｼﾞﾝｸﾞ	3	[5SV]
40	NO PART NO.	#	SPOOL	ｽﾌﾟｰﾙ	3	[5SV]
41	B-21011-40601		HEAD	ﾍｯﾄﾞ	3	[5SV]
42	B-94101-10252		WASHER	ﾜｯｼｬ	3	[5SV]
43	B-21111-40602		PLATE	ﾌﾟﾚｰﾄ	6	[5SV]
44	B-21001-00690		O-RING	Oﾘﾝｸﾞ	6	[5SV]
45	B-21111-43001		WIPER	ﾜｲﾊﾟ	6	[5SV]

FIG.113 CONTROL VALVE [5SV]

(F4047340) コントロールバルブ

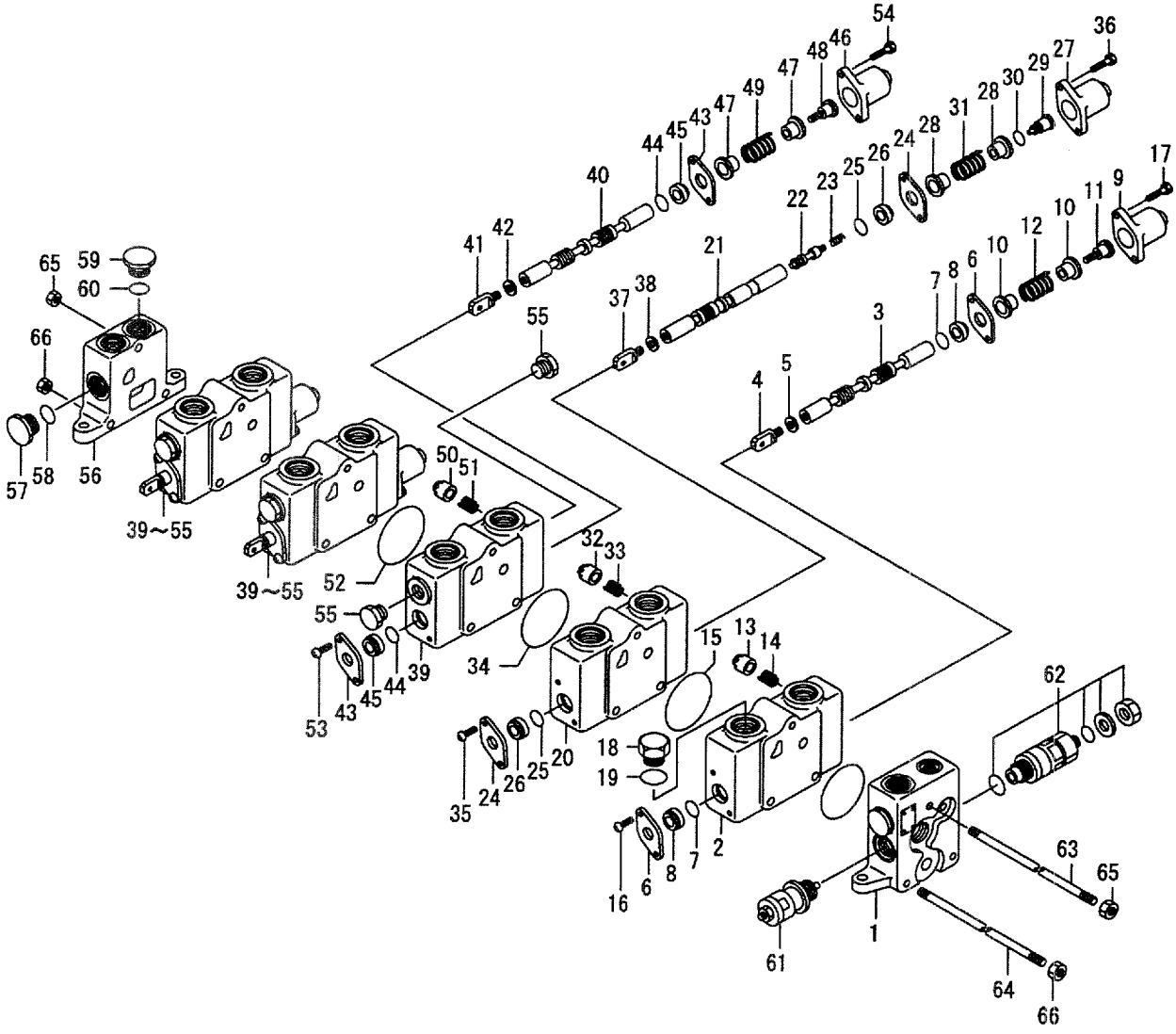

A:FD35C8:1-490 D:FD40T8:1-490 G:FD50T8:1-172 K:FG45T8:1-171
B:FD35T8:1-490 E:FD45C8:1-490 H:FG35T8:1-171 L:FG50T8:1-106
C:FD40C8:1-490 F:FD45T8:1-490 J:FG40T8:1-171

FIG.113
(F4047340)

Item No	Part No.	Mark	Description		Req'd	Remarks : Serial No.
46	B-21111-40907		CAP	ｷｬｯﾌﾟ	3	[5SV]
47	B-21111-40706		SEAT	ｼｰﾄ	6	[5SV]
48	B-21111-40407		SCREW	ｽｸﾘｭ	3	[5SV]
49	B-21111-40504		SPRING	ｽﾌﾟﾘﾝｸﾞ	3	[5SV]
50	B-21011-40701		POPPET	ﾎﾟﾍﾟｯﾄ	3	[5SV]
51	B-21011-40801		SPRING	ｽﾌﾟﾘﾝｸﾞ	3	[5SV]
52	B-21001-00334		O-RING	Oﾘﾝｸﾞ	3	[5SV]
53	B-91111-60102		SCREW	ｽｸﾘｭ	6	[5SV]
54	B-92702-06221		BOLT	ﾎﾞﾙﾄ	6	[5SV]
55	B-21113-40308		PLUG	ﾌﾟﾗｸﾞ	6	[5SV]
A5	B-21013-40402		SECTION-ASSY,OUTLET	ｱｳﾄﾚｯﾄｾｸｼｮﾝｱｯｾﾝ	1	[5SV] INC.56-60
56	NO PART NO.	#	HOUSING	ﾊｳｼﾞﾝｸﾞ	1	[5SV]
57	B-21001-00258		PLUG	ﾌﾟﾗｸﾞ	1	[5SV]
58	B-21001-00098		O-RING	Oﾘﾝｸﾞ	1	[5SV]
59	B-21001-00212		PLUG	ﾌﾟﾗｸﾞ	1	[5SV]
60	B-21001-00213		O-RING	Oﾘﾝｸﾞ	1	[5SV]
61	B-21113-40058		VALVE,RELIEF	ﾊﾞﾙﾌﾞ	1	[5SV]
62	B-21013-30664		VALVE,RELIEF	ﾊﾞﾙﾌﾞ	1	[5SV]
63	NO PART NO.		ROD,TIE	ﾛｯﾄﾞ	1	[5SV]
64	NO PART NO.		ROD,TIE	ﾛｯﾄﾞ	2	[5SV]
65	B-21001-00333		NUT	ﾅｯﾄ	2	[5SV]
66	B-21001-00332		NUT	ﾅｯﾄ	4	[5SV]
K1	B-2101A-40001		KIT,SEAL	ｼｰﾙｷｯﾄ	1	[5SV] INC.7,8,15
K2	B-21003-40010		KIT,CAP	ｷｬｯﾌﾟｷｯﾄ	1	[5SV] INC.9,17
K3	B-21003-40071		KIT,END,SPOOL	ｽﾌﾟｰﾙｴﾝﾄﾞｷｯﾄ	1	[5SV] INC.10-12
K4	B-21003-40072		KIT,CHECK	ﾁｪｯｸｷｯﾄ	1	[5SV] INC.13,14
K5	B-2101A-40002		KIT,SEAL	ｼｰﾙｷｯﾄ	1	[5SV] INC.25,26,30,34
K6	B-21003-40072		KIT,CHECK	ﾁｪｯｸｷｯﾄ	1	[5SV] INC.32,33

FIG.113A CONTROL VALVE [5SV]

(F4047341) コントロールバルブ

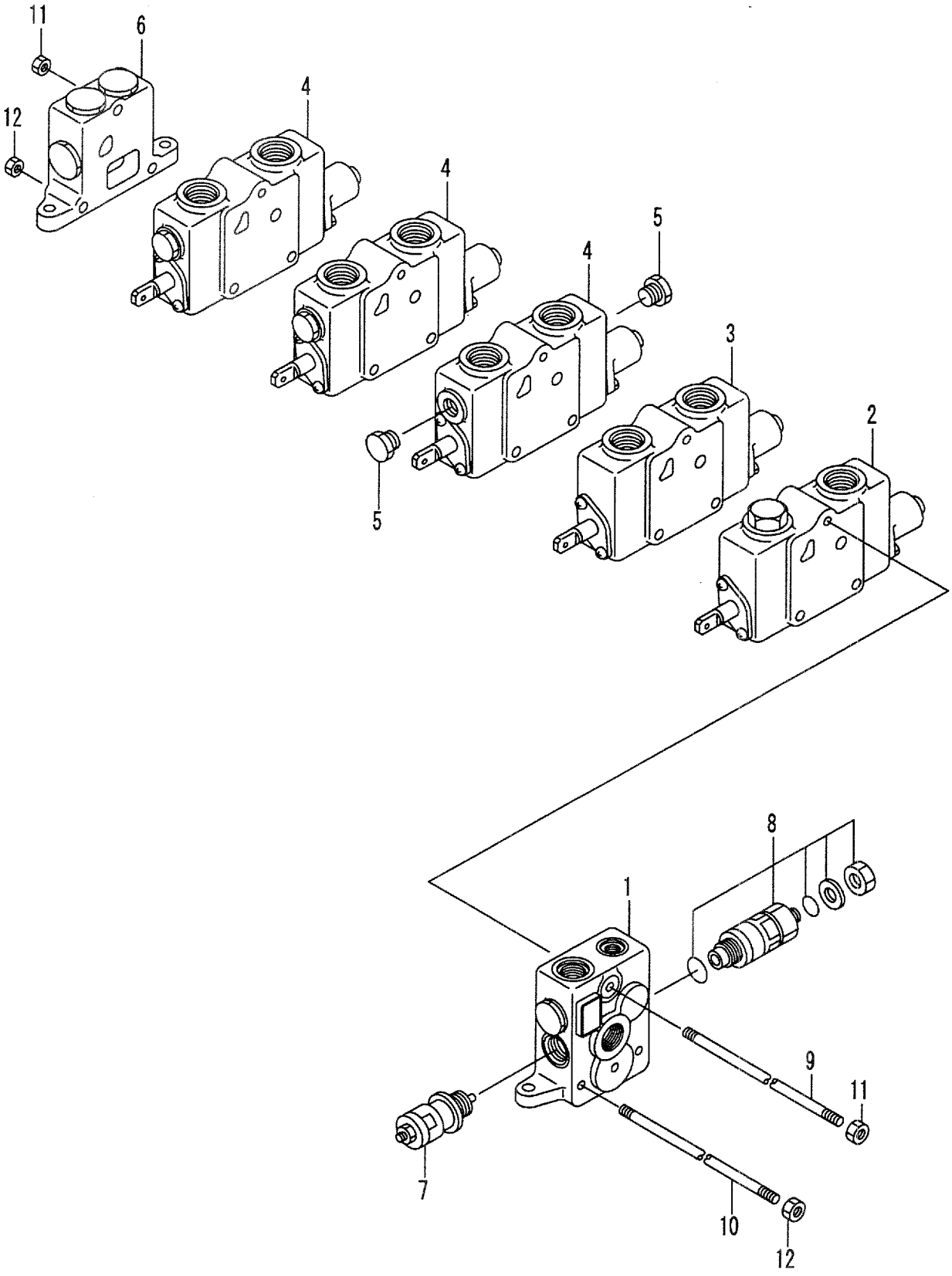

A:FD35C8:491- D:FD40T8:491- G:FD50T8:173- K:FG45T8:172-
B:FD35T8:491- E:FD45C8:491- H:FG35T8:172- L:FG50T8:107-
C:FD40C8:491- F:FD45T8:491- J:FG40T8:172-

FIG.113A
(F4047341)

Item No	Part No.	Mark	Description		Req'd	Remarks : Serial No.
A1	235C7-30502		VALVE-ASSY,CONTROL	ｺﾝﾄﾛｰﾙﾊﾞﾙﾌﾞｱｯｾﾝ	1	[5SV] INC.1-12
1	B-C0013-40006		SECTION,INLET	ｲﾝﾚｯﾄｾｸｼｮﾝ	1	[5SV]SEE FIG.120
2	B-21013-40666		SECTION,SPOOL(LIFT)	ｽﾌﾟｰﾙｾｸｼｮﾝ	1	[5SV]SEE FIG.121
3	B-C0013-41049		SECTION,SPOOL(TILT)	ｽﾌﾟｰﾙｾｸｼｮﾝ	1	[5SV]SEE FIG.122
4	B-21013-47307		SECTION,SPOOL(ATT)	ｽﾌﾟｰﾙｾｸｼｮﾝ	3	[5SV]SEE FIG.123
5	B-21113-40308		PLUG	ﾌﾟﾗｸﾞ	6	[5SV]
6	B-21013-40402		SECTION,OUTLET	ｱｳﾄﾚｯﾄｾｸｼｮﾝ	1	[5SV]SEE FIG.124
7	B-21113-40058		VALVE,RELIEF	ﾊﾞﾙﾌﾞ	1	[5SV]
8	B-21013-30664		VALVE,RELIEF	ﾊﾞﾙﾌﾞ	1	[5SV]
9	B-21051-40402		ROD,TIE	ﾛｯﾄﾞ	1	[5SV]
10	B-21051-40401		ROD,TIE	ﾛｯﾄﾞ	2	[5SV]
11	B-21001-00333		NUT	ﾅｯﾄ	2	[5SV]
12	B-21001-00332		NUT	ﾅｯﾄ	4	[5SV]

FIG.114 CONTROL VALVE FITTING [2SV]

(F4047350) コントロールバルブフィッティング

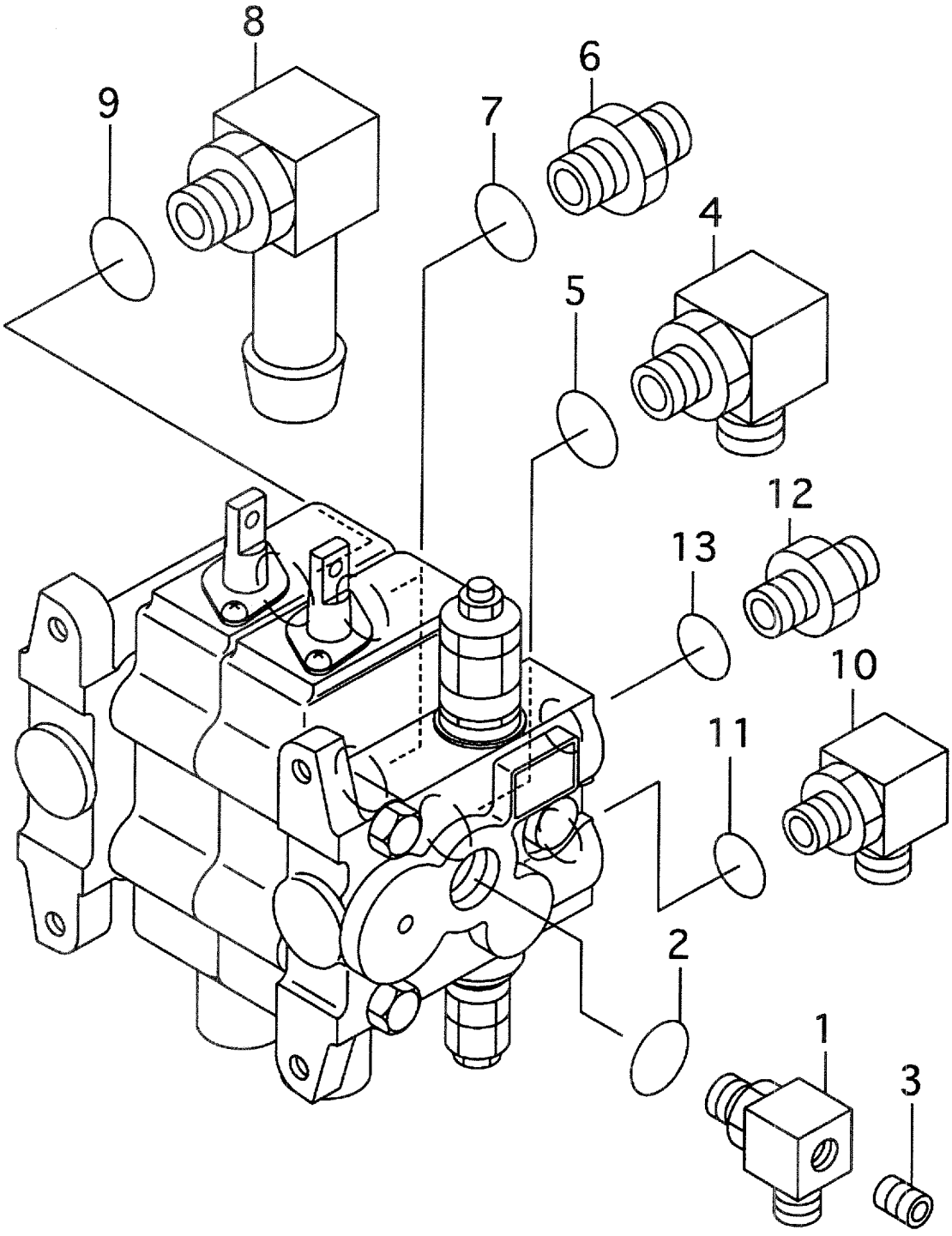

A:FD35C8 D:FD40T8 G:FD50T8 K:FG45T8
B:FD35T8 E:FD45C8 H:FG35T8 L:FG50T8
C:FD40C8 F:FD45T8 J:FG40T8

FIG.114
(F4047350)

Item No	Part No.	Mark	Description		Req'd	Remarks : Serial No.
A1	25957-60551		ELBOW-ASSY	ｴﾙﾎﾞｱｯｾﾝ	1	INC.1-3
1	NO PART NO.	#	ELBOW	ｴﾙﾎﾞ	1	
2	03320-00240		O-RING	Oﾘﾝｸﾞ	1	
3	04000-00200		PLUG	ﾌﾟﾗｸﾞ	1	
A2	25307-60401		ELBOW-ASSY	ｴﾙﾎﾞｱｯｾﾝ	1	INC.4,5
4	NO PART NO.	#	ELBOW	ｴﾙﾎﾞ	1	
5	89140-00009		O-RING	Oﾘﾝｸﾞ	1	
A3	230C7-60201		NIPPLE-ASSY	ﾆｯﾌﾟﾙｱｯｾﾝ	2	INC.6,7
6	NO PART NO.	#	NIPPLE	ﾆｯﾌﾟﾙ	2	
7	89140-00009		O-RING	Oﾘﾝｸﾞ	2	
A4	25957-60561		ELBOW-ASSY	ｴﾙﾎﾞｱｯｾﾝ	1	INC.8,9
8	NO PART NO.	#	ELBOW	ｴﾙﾎﾞ	1	
9	89140-00010		O-RING	Oﾘﾝｸﾞ	1	
A5	04150-20303		ELBOW-ASSY	ｴﾙﾎﾞｱｯｾﾝ	1	INC.10,11
10	NO PART NO.	#	ELBOW	ｴﾙﾎﾞ	1	
11	03320-00140		O-RING	Oﾘﾝｸﾞ	1	
12	24389-46031		NIPPLE	ﾆｯﾌﾟﾙ	1	
13	03320-00240		O-RING	Oﾘﾝｸﾞ	1	

FIG.115 CONTROL VALVE FITTING [5SV]

(F4047360) コントロールバルブフィッティング

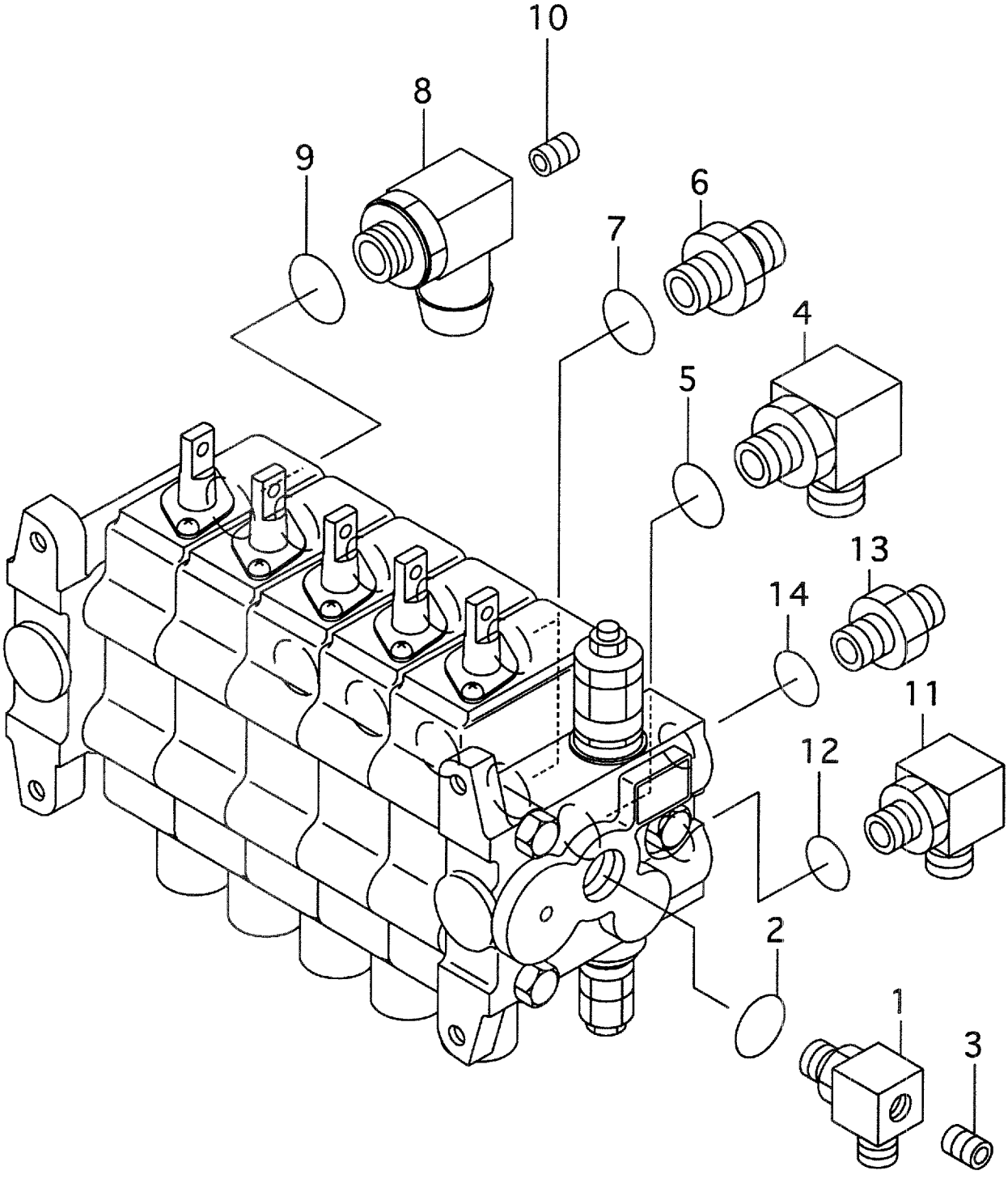

A:FD35C8 D:FD40T8 G:FD50T8 K:FG45T8
B:FD35T8 E:FD45C8 H:FG35T8 L:FG50T8
C:FD40C8 F:FD45T8 J:FG40T8

FIG.115
(F4047360)

Item No	Part No.	Mark	Description		Req'd	Remarks : Serial No.
A1	25957-60551		ELBOW-ASSY	ｴﾙﾎﾞｱｯｾﾝ	1	[5SV] INC.1-3
1	NO PART NO.	#	ELBOW	ｴﾙﾎﾞ	1	[5SV]
2	03320-00240		O-RING	Oﾘﾝｸﾞ	1	[5SV]
3	04000-00200		PLUG	ﾌﾟﾗｸﾞ	1	[5SV]
A2	25307-60401		ELBOW-ASSY	ｴﾙﾎﾞｱｯｾﾝ	1	[5SV] INC.4,5
4	NO PART NO.	#	ELBOW	ｴﾙﾎﾞ	1	[5SV]
5	89140-00009		O-RING	Oﾘﾝｸﾞ	1	[5SV]
A3	230C7-60201		NIPPLE-ASSY	ﾆｯﾌﾟﾙｱｯｾﾝ	2	[5SV] INC.6,7
6	NO PART NO.	#	NIPPLE	ﾆｯﾌﾟﾙ	2	[5SV]
7	89140-00009		O-RING	Oﾘﾝｸﾞ	2	[5SV]
8	63700-13101		ELBOW	ｴﾙﾎﾞ	1	[5SV]
9	89140-00010		O-RING	Oﾘﾝｸﾞ	1	[5SV]
10	04000-00400		PLUG	ﾌﾟﾗｸﾞ	1	[5SV]
A4	04150-20303		ELBOW-ASSY	ｴﾙﾎﾞｱｯｾﾝ	1	[5SV] INC.11,12
11	NO PART NO.	#	ELBOW	ｴﾙﾎﾞ	1	[5SV]
12	03320-00140		O-RING	Oﾘﾝｸﾞ	1	[5SV]
13	24389-46031		NIPPLE	ﾆｯﾌﾟﾙ	1	[5SV]
14	03320-00240		O-RING	Oﾘﾝｸﾞ	1	[5SV]

FIG.116 VALVE CONTROL [2SV]

(F4047370) ﾊﾞﾙﾌﾞｺﾝﾄﾛｰﾙ

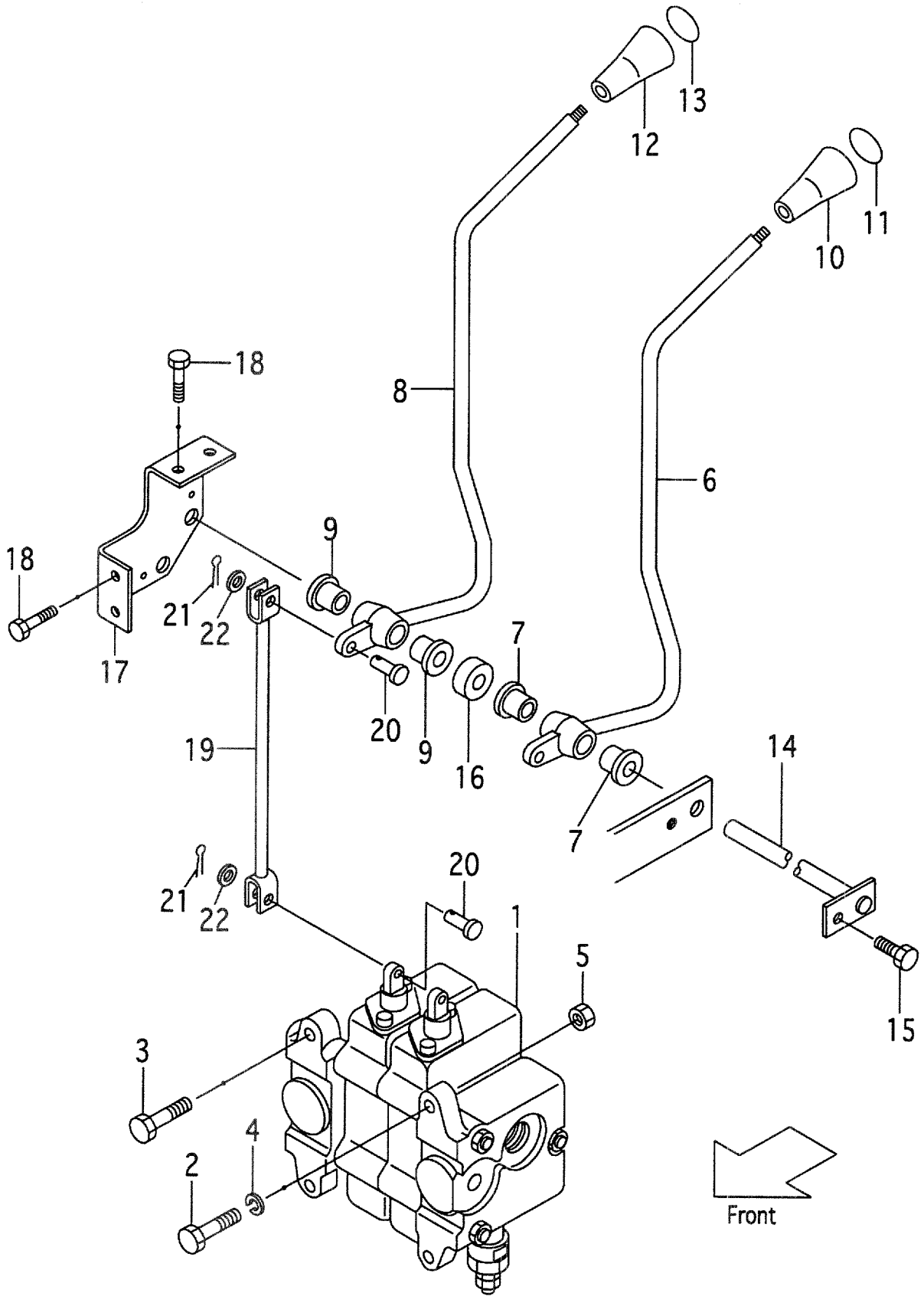

A:FD35C8 D:FD40T8 G:FD50T8 K:FG45T8
B:FD35T8 E:FD45C8 H:FG35T8 L:FG50T8
C:FD40C8 F:FD45T8 J:FG40T8

FIG.116
(F4047370)

Item No	Part No.	Mark	Description		Req'd	Remarks : Serial No.
1	235C7-30201		VALVE,CONTROL	ﾊﾞﾙﾌﾞ	1	A,B,C,D,E,F:1-490 G:1-172 H,J,K:1-171 L:1-106 [2SV]SEE FIG.110
-	235C7-30202		VALVE,CONTROL	ﾊﾞﾙﾌﾞ	1	A,B,C,D,E,F:491- G:173- H,J,K:172- L:107- [2SV]SEE FIG.110A
2	01184-12050		BOLT & WASHER	ﾎﾞﾙﾄ&ﾜｯｼｬ	1	A,B,C,D,E,F:1-107 G:1-101 H,J,K,L:1-102 [2SV]
-	01186-12050		BOLT	ﾎﾞﾙﾄ	1	A,B,C,D,E,F:108- G:102- H,J,K,L:103- [2SV]
3	01184-12050		BOLT & WASHER	ﾎﾞﾙﾄ&ﾜｯｼｬ	2	A,B,C,D,E,F:1-107 G:1-101 H,J,K,L:1-102 [2SV]
-	01186-12040		BOLT	ﾎﾞﾙﾄ	2	A,B,C,D,E,F:108- G:102- H,J,K,L:103- [2SV]
4	02010-00012		WASHER	ﾜｯｼｬ	3	A,B,C,D,E,F:1-107 G:1-101 H,J,K,L:1-102 [2SV]
5	01400-00012		NUT	ﾅｯﾄ	3	A,B,C,D,E,F:1-107 G:1-101 H,J,K,L:1-102 [2SV]
-	01400-00012		NUT	ﾅｯﾄ	1	A,B,C,D,E,F:108- G:102- H,J,K,L:103- [2SV]
A1	230C7-40091		LEVER-ASSY,LIFT	ﾘﾌﾄﾚﾊﾞｰｱｯｾﾝ	1	A,B,C,D,E,F:1-986 G:1-237 H,J,K:1-214 L:1-108 [2SV] INC.6,7
-	235C7-40091		LEVER-ASSY,LIFT	ﾘﾌﾄﾚﾊﾞｰｱｯｾﾝ	1	A,B,C,D,E,F:987- G:238- H,J,K:215- L:109- [2SV] INC.6,7
6	NO PART NO.	#	LEVER,LIFT	ﾚﾊﾞｰ	1	[2SV]
7	214A7-42071		BUSHING	ﾌﾞｯｼﾝｸﾞ	2	[2SV]

FIG.116 VALVE CONTROL [2SV]

(F4047370) ﾊﾞﾙﾌﾞｺﾝﾄﾛｰﾙ

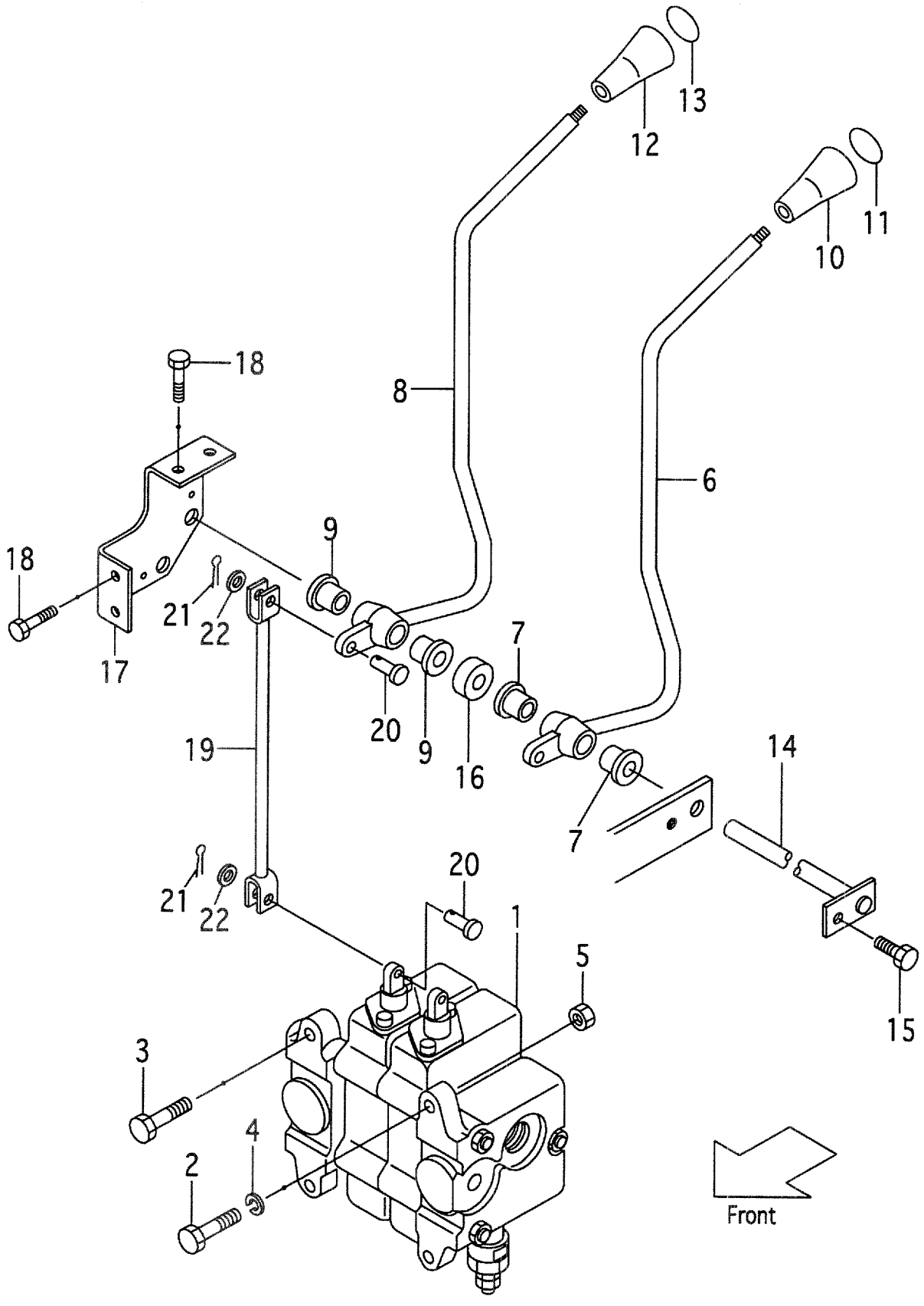

A:FD35C8 D:FD40T8 G:FD50T8 K:FG45T8
B:FD35T8 E:FD45C8 H:FG35T8 L:FG50T8
C:FD40C8 F:FD45T8 J:FG40T8

FIG.116
(F4047370)

Item No	Part No.	Mark	Description		Req'd	Remarks : Serial No.
A2	230C7-40191		LEVER-ASSY,TILT	ﾃｨﾙﾄﾚﾊﾞｰｱｯｾﾝ	1	A,B,C,D,E,F:1-986 G:1-237 H,J,K:1-214 L:1-108 [2SV] INC.8,9
-	235C7-40191		LEVER-ASSY,TILT	ﾃｨﾙﾄﾚﾊﾞｰｱｯｾﾝ	1	A,B,C,D,E,F:987- G:238- H,J,K:215- L:109- [2SV] INC.8,9
8	NO PART NO.	#	LEVER,TILT	ﾚﾊﾞｰ	1	[2SV]
9	214A7-42071		BUSHING	ﾌﾞｯｼﾝｸﾞ	2	[2SV]
10	214A7-42181		KNOB,LIFT	ﾉﾌﾞ	1	[2SV]
11	214A7-42191		DECAL,LIFT	ﾃﾞｶﾙ	1	[2SV]
12	214A7-42181		KNOB,TILT	ﾉﾌﾞ	1	[2SV]
13	214A7-42201		DECAL,TILT	ﾃﾞｶﾙ	1	[2SV]
14	23917-42091		SHAFT,LEVER	ｼｬﾌﾄ	1	[2SV]
15	01183-06012		BOLT	ﾎﾞﾙﾄ	1	[2SV]
16	23917-42161		SPACER	ｽﾍﾟｰｻ	1	[2SV]
17	235C7-42001		BRACKET	ﾌﾞﾗｹｯﾄ	1	[2SV]
18	216H3-92281		BOLT	ﾎﾞﾙﾄ	4	[2SV]
19	235C7-42021		JOINT	ｼﾞｮｲﾝﾄ	2	[2SV]
20	02262-08025		PIN	ﾋﾟﾝ	4	[2SV]
21	02200-02016		PIN	ﾋﾟﾝ	4	[2SV]
22	02000-00008		WASHER	ﾜｯｼｬ	4	[2SV]

FIG.117 VALVE CONTROL [3SV]

(F4047380) ﾊﾞﾙﾌﾞｺﾝﾄﾛｰﾙ

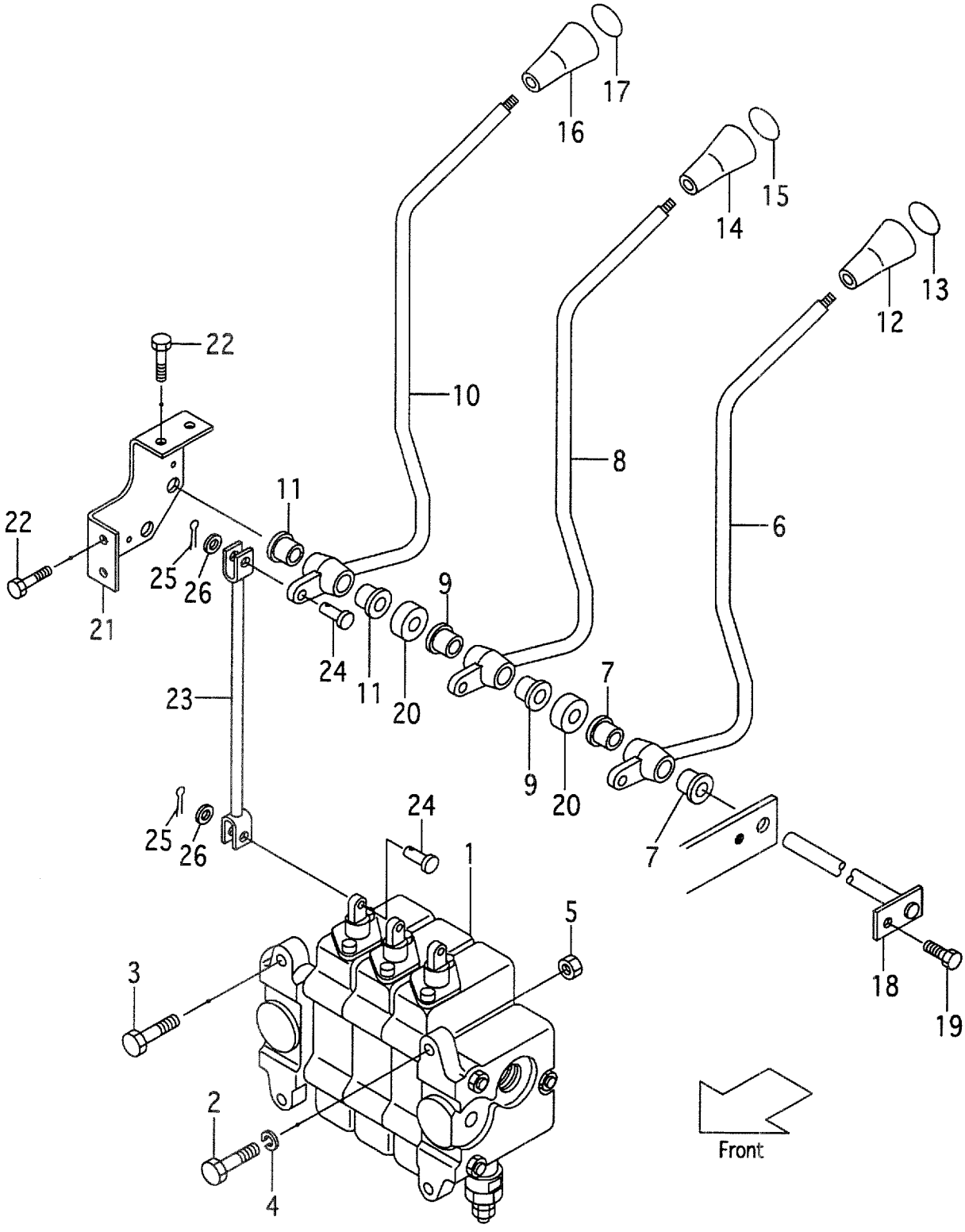

A:FD35C8 D:FD40T8 G:FD50T8 K:FG45T8
B:FD35T8 E:FD45C8 H:FG35T8 L:FG50T8
C:FD40C8 F:FD45T8 J:FG40T8

FIG.117
(F4047380)

Item No	Part No.	Mark	Description		Req'd	Remarks : Serial No.
1	235C7-30301		VALVE,CONTROL	ﾊﾞﾙﾌﾞ	1	A,B,C,D,E,F:1-490 G:1-172 H,J,K:1-171 L:1-106 [3SV]SEE FIG.111
-	235C7-30302		VALVE,CONTROL	ﾊﾞﾙﾌﾞ	1	A,B,C,D,E,F:491- G:173- H,J,K:172- L:107- [3SV]SEE FIG.111A
2	01184-12050		BOLT & WASHER	ﾎﾞﾙﾄ&ﾜｯｼｬ	1	A,B,C,D,E,F:1-107 G:1-101 H,J,K,L:1-102 [3SV]
-	01186-12050		BOLT	ﾎﾞﾙﾄ	1	A,B,C,D,E,F:108- G:102- H,J,K,L:103- [3SV]
3	01184-12050		BOLT & WASHER	ﾎﾞﾙﾄ&ﾜｯｼｬ	2	A,B,C,D,E,F:1-107 G:1-101 H,J,K,L:1-102 [3SV]
-	01186-12040		BOLT	ﾎﾞﾙﾄ	2	A,B,C,D,E,F:108- G:102- H,J,K,L:103- [3SV]
4	02010-00012		WASHER	ﾜｯｼｬ	3	A,B,C,D,E,F:1-107 G:1-101 H,J,K,L:1-102 [3SV]
5	01400-00012		NUT	ﾅｯﾄ	3	A,B,C,D,E,F:1-107 G:1-101 H,J,K,L:1-102 [3SV]
-	01400-00012		NUT	ﾅｯﾄ	1	A,B,C,D,E,F:108- G:102- H,J,K,L:103- [3SV]
A1	230C7-40091		LEVER-ASSY,LIFT	ﾘﾌﾄﾚﾊﾞｰｱｯｾﾝ	1	A,B,C,D,E,F:1-986 G:1-237 H,J,K:1-214 L:1-108 [3SV] INC.6,7
-	235C7-40091		LEVER-ASSY,LIFT	ﾘﾌﾄﾚﾊﾞｰｱｯｾﾝ	1	A,B,C,D,E,F:987- G:238- H,J,K:215- L:109- [3SV] INC.6,7

FIG.117 VALVE CONTROL [3SV]

(F4047380) ﾊﾞﾙﾌﾞｺﾝﾄﾛｰﾙ

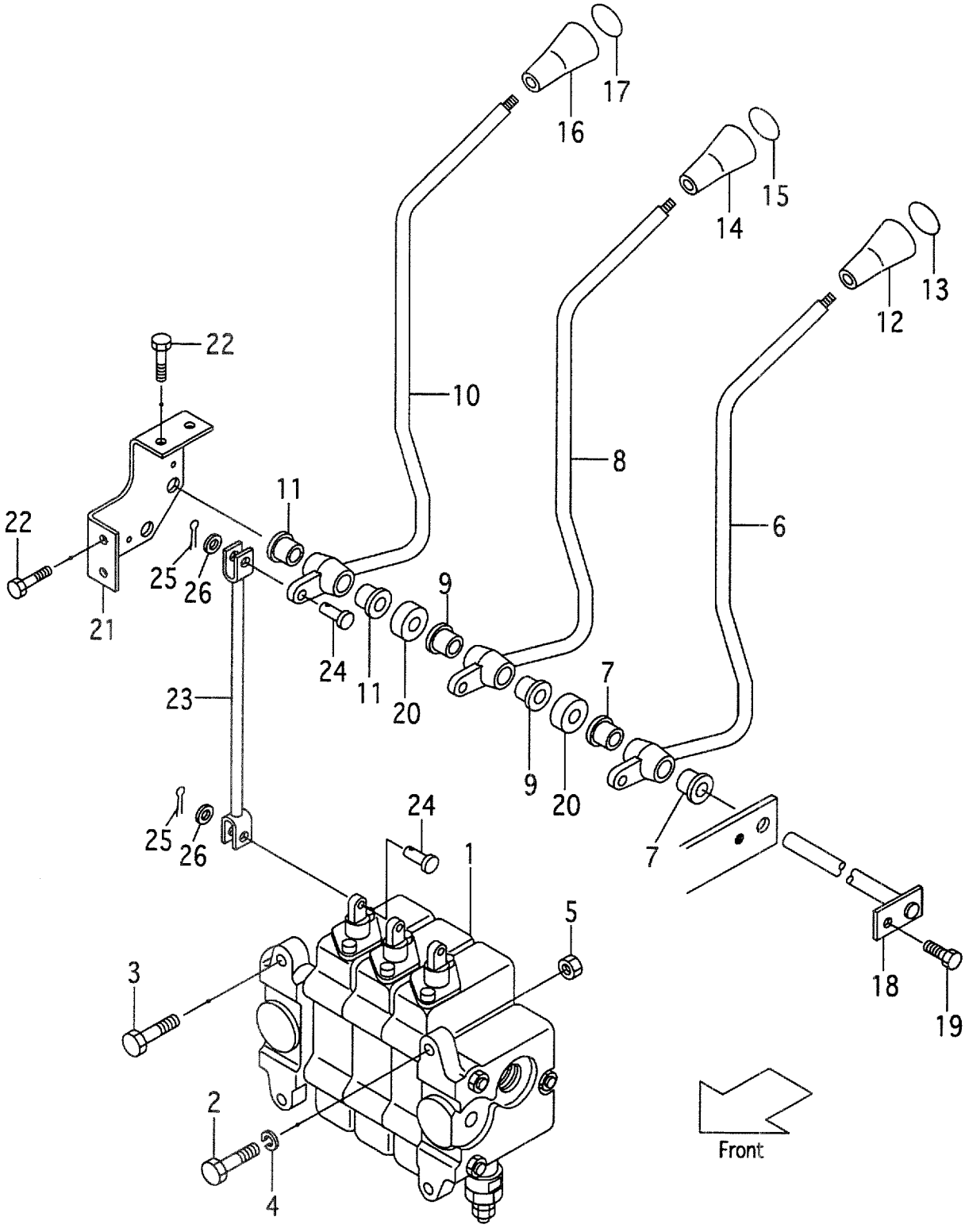

A:FD35C8 D:FD40T8 G:FD50T8 K:FG45T8
B:FD35T8 E:FD45C8 H:FG35T8 L:FG50T8
C:FD40C8 F:FD45T8 J:FG40T8

FIG.117
(F4047380)

Item No	Part No.	Mark	Description		Req'd	Remarks : Serial No.
6	NO PART NO.	#	LEVER,LIFT	ﾚﾊﾞｰ	1	[3SV]
7	214A7-42071		BUSHING	ﾌﾞｯｼﾝｸﾞ	2	[3SV]
A2	230C7-40191		LEVER-ASSY,TILT	ﾃｨﾙﾄﾚﾊﾞｰｱｯｾﾝ	1	A,B,C,D,E,F:1-986 G:1-237 H,J,K:1-214 L:1-108 [3SV] INC.8,9
-	235C7-40191		LEVER-ASSY,TILT	ﾃｨﾙﾄﾚﾊﾞｰｱｯｾﾝ	1	A,B,C,D,E,F:987- G:238- H,J,K:215- L:109- [3SV] INC.8,9
8	NO PART NO.	#	LEVER,TILT	ﾚﾊﾞｰ	1	[3SV]
9	214A7-42071		BUSHING	ﾌﾞｯｼﾝｸﾞ	2	[3SV]
A3	230C7-40291		LEVER-ASSY,3RD	ｻｰﾄﾞﾚﾊﾞｰｱｯｾﾝ	1	A,B,C,D,E,F:1-986 G:1-237 H,J,K:1-214 L:1-108 [3SV] INC.10,11
-	235C7-40291		LEVER-ASSY,3RD	ｻｰﾄﾞﾚﾊﾞｰｱｯｾﾝ	1	A,B,C,D,E,F:987- G:238- H,J,K:215- L:109- [3SV] INC.10,11
10	NO PART NO.	#	LEVER,3RD	ﾚﾊﾞｰ	1	[3SV]
11	214A7-42071		BUSHING	ﾌﾞｯｼﾝｸﾞ	2	[3SV]
12	214A7-42181		KNOB,LIFT	ﾉﾌﾞ	1	[3SV]
13	214A7-42191		DECAL,LIFT	ﾃﾞｶﾙ	1	[3SV]
14	214A7-42181		KNOB,TILT	ﾉﾌﾞ	1	[3SV]
15	214A7-42201		DECAL,TILT	ﾃﾞｶﾙ	1	[3SV]
16	NO PART NO.		KNOB,THIRD	ﾉﾌﾞ	1	[3SV]
17	NO PART NO.		DECAL,THIRD	ﾃﾞｶﾙ	1	[3SV]
18	23917-42101		SHAFT,LEVER	ｼｬﾌﾄ	1	[3SV]
19	01183-06012		BOLT	ﾎﾞﾙﾄ	1	[3SV]
20	23917-42161		SPACER	ｽﾍﾟｰｻ	2	[3SV]
21	235C7-42001		BRACKET	ﾌﾞﾗｹｯﾄ	1	[3SV]
22	216H3-92281		BOLT	ﾎﾞﾙﾄ	4	[3SV]
23	235C7-42021		JOINT	ｼﾞｮｲﾝﾄ	3	[3SV]
24	02262-08025		PIN	ﾋﾟﾝ	6	[3SV]
25	02200-02016		PIN	ﾋﾟﾝ	6	[3SV]
26	02000-00008		WASHER	ﾜｯｼｬ	6	[3SV]

FIG.118 VALVE CONTROL [4SV]

(F4047390) ﾊﾞﾙﾌﾞｺﾝﾄﾛｰﾙ

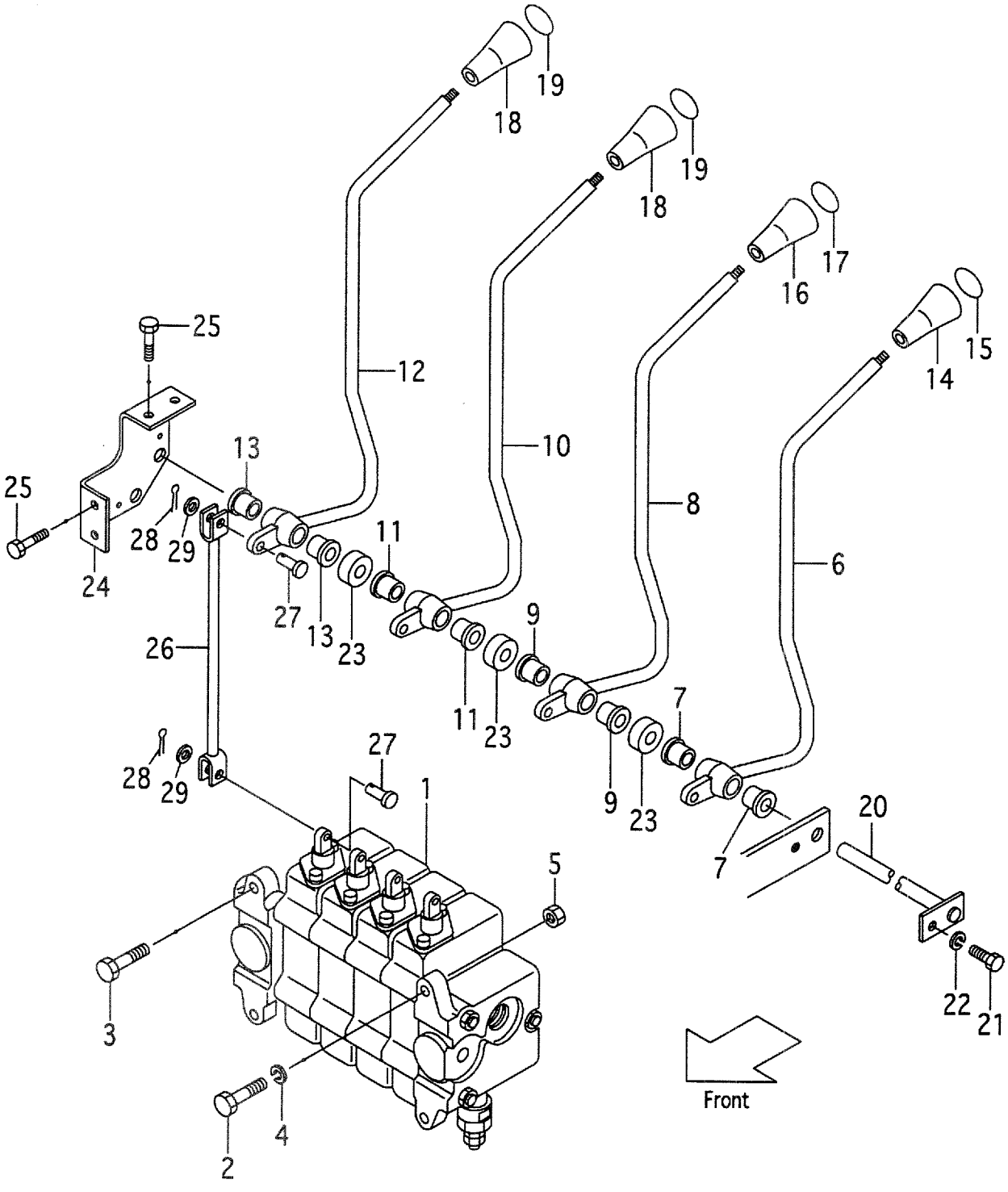

A:FD35C8 D:FD40T8 G:FD50T8 K:FG45T8
B:FD35T8 E:FD45C8 H:FG35T8 L:FG50T8
C:FD40C8 F:FD45T8 J:FG40T8

FIG.118
(F4047390)

Item No	Part No.	Mark	Description		Req'd	Remarks : Serial No.
1	235C7-30401		VALVE,CONTROL	ﾊﾞﾙﾌﾞ	1	A,B,C,D,E,F:1-490 G:1-172 H,J,K:1-171 L:1-106 [4SV]SEE FIG.112
-	235C7-30402		VALVE,CONTROL	ﾊﾞﾙﾌﾞ	1	A,B,C,D,E,F:491- G:173- H,J,K:172- L:107- [4SV]SEE FIG.112A
2	01184-12050		BOLT & WASHER	ﾎﾞﾙﾄ&ﾜｯｼｬ	1	A,B,C,D,E,F:1-107 G:1-101 H,J,K,L:1-102 [4SV]
-	01186-12050		BOLT	ﾎﾞﾙﾄ	1	A,B,C,D,E,F:108- G:102- H,J,K,L:103- [4SV]
3	01184-12050		BOLT & WASHER	ﾎﾞﾙﾄ&ﾜｯｼｬ	2	A,B,C,D,E,F:1-107 G:1-101 H,J,K,L:1-102 [4SV]
-	01186-12040		BOLT	ﾎﾞﾙﾄ	2	A,B,C,D,E,F:108- G:102- H,J,K,L:103- [4SV]
4	02010-00012		WASHER	ﾜｯｼｬ	3	A,B,C,D,E,F:1-107 G:1-101 H,J,K,L:1-102 [4SV]
5	01400-00012		NUT	ﾅｯﾄ	3	A,B,C,D,E,F:1-107 G:1-101 H,J,K,L:1-102 [4SV]
-	01400-00012		NUT	ﾅｯﾄ	1	A,B,C,D,E,F:108- G:102- H,J,K,L:103- [4SV]
A1	230C7-40091		LEVER-ASSY,LIFT	ﾘﾌﾄﾚﾊﾞｰｱｯｾﾝ	1	A,B,C,D,E,F:1-986 G:1-237 H,J,K:1-214 L:1-108 [4SV] INC.6,7
-	235C7-40091		LEVER-ASSY,LIFT	ﾘﾌﾄﾚﾊﾞｰｱｯｾﾝ	1	A,B,C,D,E,F:987- G:238- H,J,K:215- L:109- [4SV] INC.6,7

FIG.118 VALVE CONTROL [4SV]

(F4047390) ﾊﾞﾙﾌﾞｺﾝﾄﾛｰﾙ

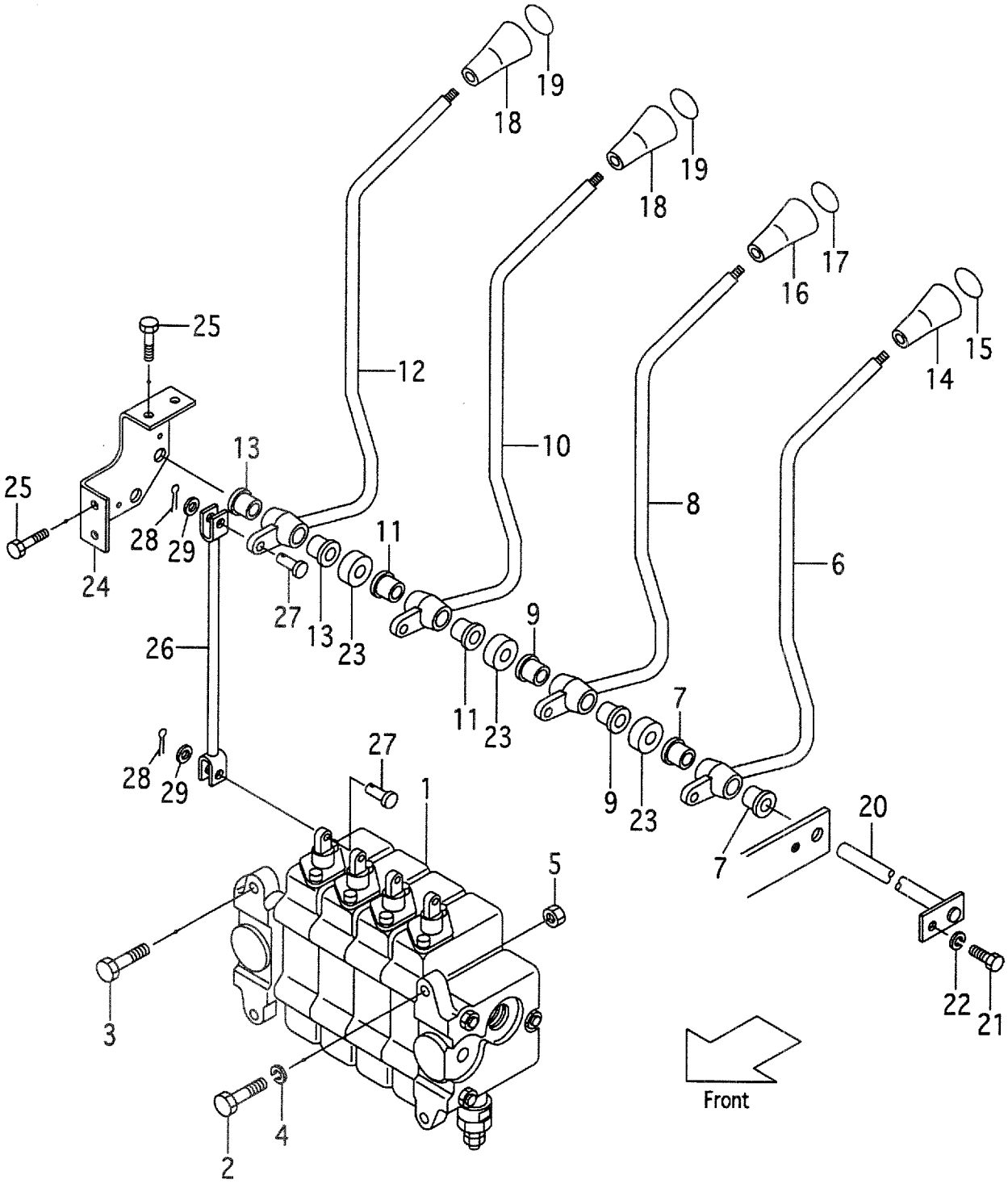

A:FD35C8 D:FD40T8 G:FD50T8 K:FG45T8
B:FD35T8 E:FD45C8 H:FG35T8 L:FG50T8
C:FD40C8 F:FD45T8 J:FG40T8

FIG.118
(F4047390)

Item No	Part No.	Mark	Description		Req'd	Remarks : Serial No.
6	NO PART NO.	#	LEVER,LIFT	ﾚﾊﾞｰ	1	[4SV]
7	214A7-42071		BUSHING	ﾌﾞｯｼﾝｸﾞ	2	[4SV]
A2	230C7-40191		LEVER-ASSY,TILT	ﾃｨﾙﾄﾚﾊﾞｰｱｯｾﾝ	1	A,B,C,D,E,F:1-986 G:1-237 H,J,K:1-214 L:1-108 [4SV] INC.8,9
-	235C7-40191		LEVER-ASSY,TILT	ﾃｨﾙﾄﾚﾊﾞｰｱｯｾﾝ	1	A,B,C,D,E,F:987- G:238- H,J,K:215- L:109- [4SV] INC.8,9
8	NO PART NO.	#	LEVER,TILT	ﾚﾊﾞｰ	1	[4SV]
9	214A7-42071		BUSHING	ﾌﾞｯｼﾝｸﾞ	2	[4SV]
A3	230C7-40291		LEVER-ASSY,3RD	ｻｰﾄﾞﾚﾊﾞｰｱｯｾﾝ	1	A,B,C,D,E,F:1-986 G:1-237 H,J,K:1-214 L:1-108 [4SV] INC.10,11
-	235C7-40291		LEVER-ASSY,3RD	ｻｰﾄﾞﾚﾊﾞｰｱｯｾﾝ	1	A,B,C,D,E,F:987- G:238- H,J,K:215- L:109- [4SV] INC.10,11
10	NO PART NO.	#	LEVER,3RD	ﾚﾊﾞｰ	1	[4SV]
11	214A7-42071		BUSHING	ﾌﾞｯｼﾝｸﾞ	2	[4SV]
A4	230C7-40391		LEVER-ASSY,4TH	ﾌｫｰｽﾚﾊﾞｰｱｯｾﾝ	1	A,B,C,D,E,F:1-986 G:1-237 H,J,K:1-214 L:1-108 [4SV] INC.12,13
-	235C7-40391		LEVER-ASSY,4TH	ﾌｫｰｽﾚﾊﾞｰｱｯｾﾝ	1	A,B,C,D,E,F:987- G:238- H,J,K:215- L:109- [4SV] INC.12,13
12	NO PART NO.	#	LEVER,4TH	ﾚﾊﾞｰ	1	[4SV]
13	214A7-42071		BUSHING	ﾌﾞｯｼﾝｸﾞ	2	[4SV]
14	214A7-42181		KNOB,LIFT	ﾉﾌﾞ	1	[4SV]
15	214A7-42191		DECAL,LIFT	ﾃﾞｶﾙ	1	[4SV]
16	214A7-42181		KNOB,TILT	ﾉﾌﾞ	1	[4SV]
17	214A7-42201		DECAL,TILT	ﾃﾞｶﾙ	1	[4SV]
18	NO PART NO.		KNOB,OTHERS	ﾉﾌﾞ	2	[4SV]
19	NO PART NO.		DECAL,OTHERS	ﾃﾞｶﾙ	2	[4SV]
20	23917-42111		SHAFT,LEVER	ｼｬﾌﾄ	1	[4SV]
21	01100-06012		BOLT	ﾎﾞﾙﾄ	1	[4SV]
22	02010-00006		WASHER	ﾜｯｼｬ	1	[4SV]
23	23917-42161		SPACER	ｽﾍﾟｰｻ	3	[4SV]

FIG.118 VALVE CONTROL [4SV]

(F4047390) ﾊﾞﾙﾌﾞｺﾝﾄﾛｰﾙ

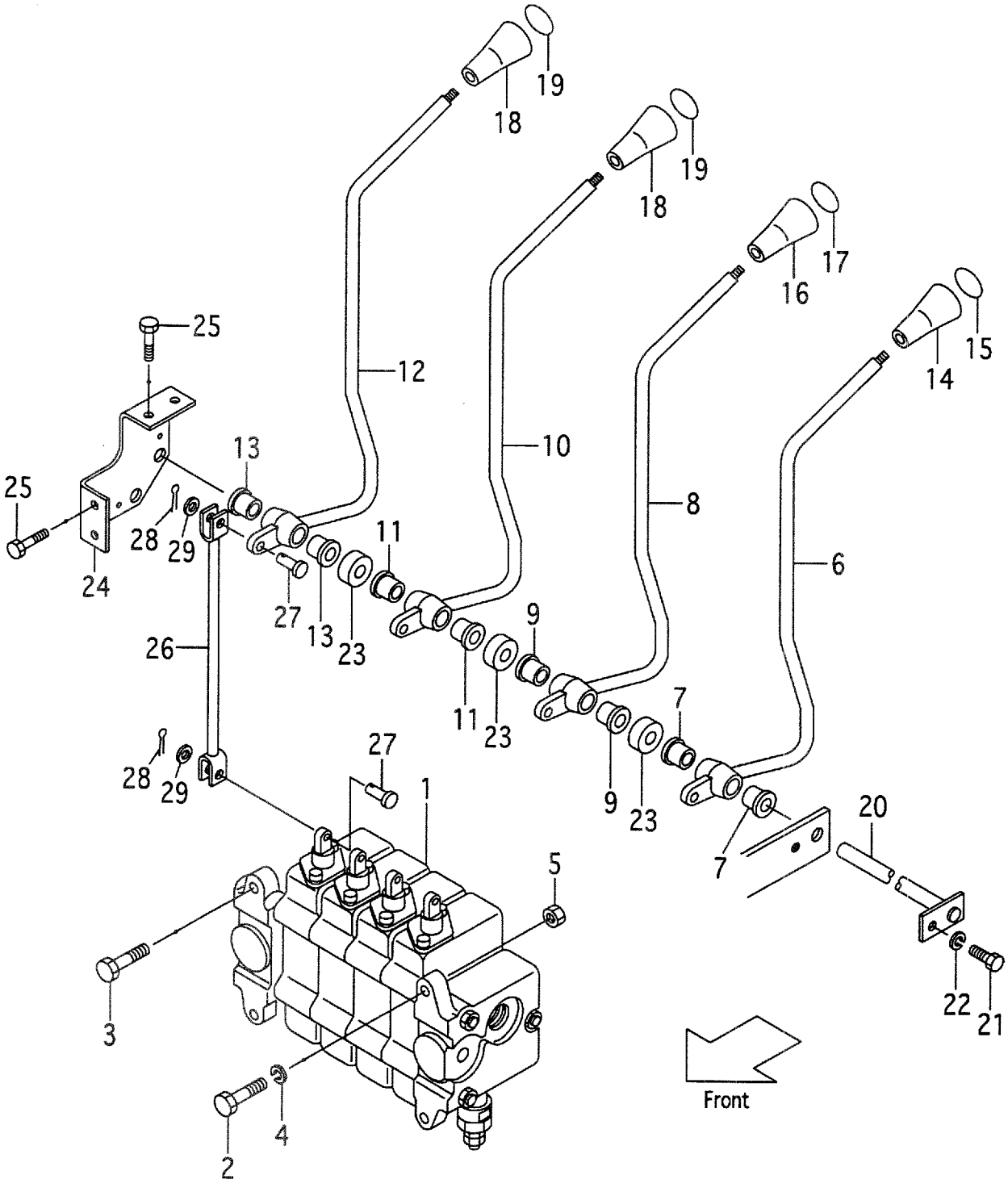

A:FD35C8 D:FD40T8 G:FD50T8 K:FG45T8
B:FD35T8 E:FD45C8 H:FG35T8 L:FG50T8
C:FD40C8 F:FD45T8 J:FG40T8

FIG.118
(F4047390)

Item No	Part No.	Mark	Description		Req'd	Remarks : Serial No.
24	235C7-42001		BRACKET	ﾌﾞﾗｹｯﾄ	1	[4SV]
25	216H3-92281		BOLT	ﾎﾞﾙﾄ	4	[4SV]
26	235C7-42021		JOINT	ｼﾞｮｲﾝﾄ	4	[4SV]
27	02262-08025		PIN	ﾋﾟﾝ	8	[4SV]
28	02200-02016		PIN	ﾋﾟﾝ	8	[4SV]
29	02000-00008		WASHER	ﾜｯｼｬ	8	[4SV]

FIG.119 VALVE CONTROL [5SV]

(F40473A0) ﾊﾞﾙﾌﾞｺﾝﾄﾛｰﾙ

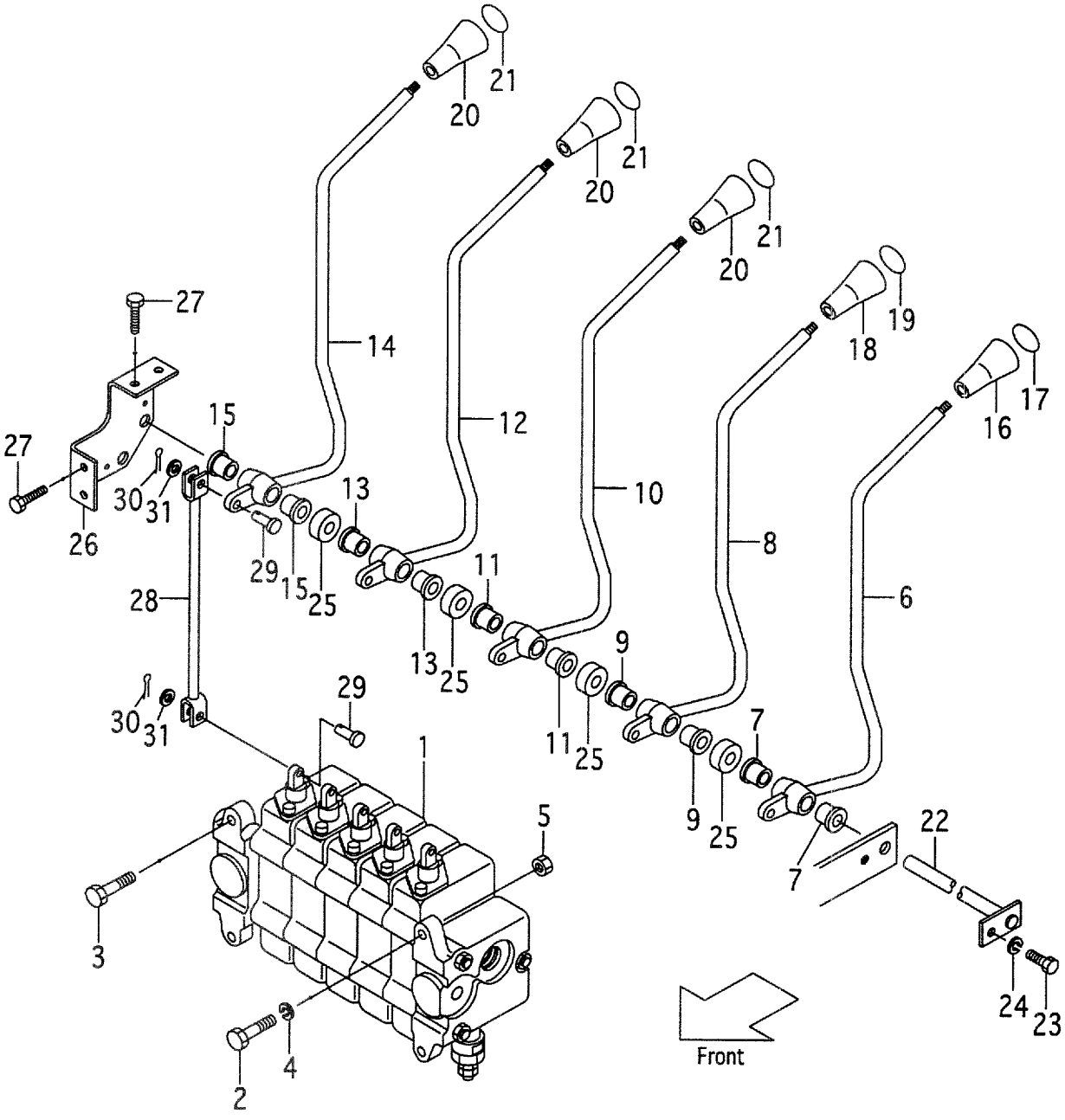

A:FD35C8 D:FD40T8 G:FD50T8 K:FG45T8
B:FD35T8 E:FD45C8 H:FG35T8 L:FG50T8
C:FD40C8 F:FD45T8 J:FG40T8

FIG.119
(F40473A0)

Item No	Part No.	Mark	Description		Req'd	Remarks : Serial No.
1	235C7-30501		VALVE,CONTROL	ﾊﾞﾙﾌﾞ	1	A,B,C,D,E,F:1-490 G:1-172 H,J,K:1-171 L:1-106 [5SV]SEE FIG.113
-	235C7-30502		VALVE,CONTROL	ﾊﾞﾙﾌﾞ	1	A,B,C,D,E,F:491- G:173- H,J,K:172- L:107- [5SV]SEE FIG.113A
2	01184-12050		BOLT & WASHER	ﾎﾞﾙﾄ&ﾜｯｼｬ	1	A,B,C,D,E,F:1-107 G:1-101 H,J,K,L:1-102 [5SV]
-	01186-12050		BOLT	ﾎﾞﾙﾄ	1	A,B,C,D,E,F:108- G:102- H,J,K,L:103- [5SV]
3	01184-12050		BOLT & WASHER	ﾎﾞﾙﾄ&ﾜｯｼｬ	2	A,B,C,D,E,F:1-107 G:1-101 H,J,K,L:1-102 [5SV]
-	01186-12040		BOLT	ﾎﾞﾙﾄ	2	A,B,C,D,E,F:108- G:102- H,J,K,L:103- [5SV]
4	02010-00012		WASHER	ﾜｯｼｬ	3	A,B,C,D,E,F:1-107 G:1-101 H,J,K,L:1-102 [5SV]
5	01400-00012		NUT	ﾅｯﾄ	3	A,B,C,D,E,F:1-107 G:1-101 H,J,K,L:1-102 [5SV]
-	01400-00012		NUT	ﾅｯﾄ	1	A,B,C,D,E,F:108- G:102- H,J,K,L:103- [5SV]
A1	230C7-40091		LEVER-ASSY,LIFT	ﾘﾌﾄﾚﾊﾞｰｱｯｾﾝ	1	A,B,C,D,E,F:1-986 G:1-237 H,J,K:1-214 L:1-108 [5SV] INC.6,7
-	235C7-40091		LEVER-ASSY,LIFT	ﾘﾌﾄﾚﾊﾞｰｱｯｾﾝ	1	A,B,C,D,E,F:987- G:238- H,J,K:215- L:109- [5SV] INC.6,7

FIG.119 VALVE CONTROL [5SV]

(F40473A0) ﾊﾞﾙﾌﾞｺﾝﾄﾛｰﾙ

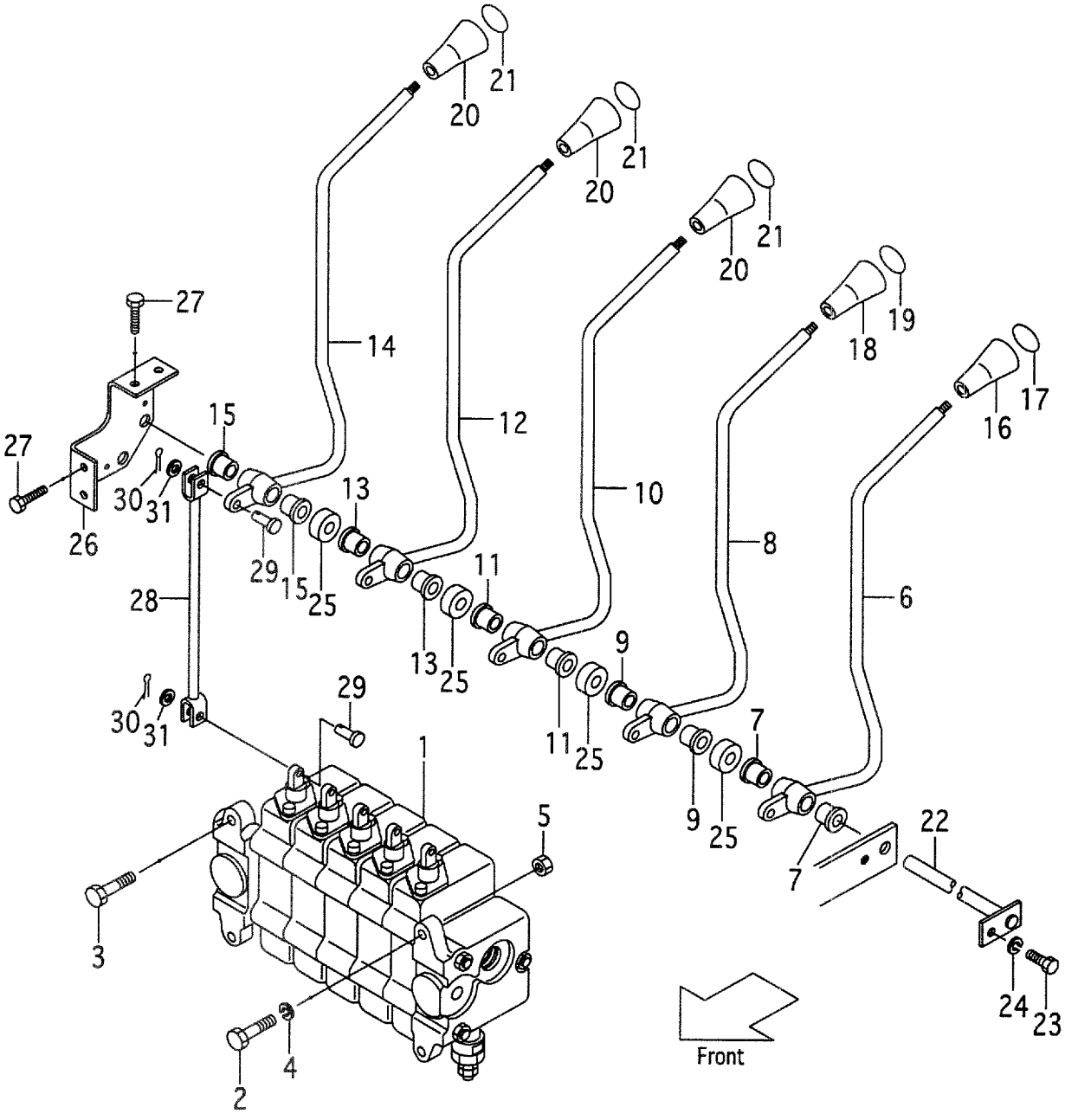

A:FD35C8 D:FD40T8 G:FD50T8 K:FG45T8
B:FD35T8 E:FD45C8 H:FG35T8 L:FG50T8
C:FD40C8 F:FD45T8 J:FG40T8

FIG.119
(F40473A0)

Item No	Part No.	Mark	Description		Req'd	Remarks : Serial No.
6	NO PART NO.	#	LEVER,LIFT	ﾚﾊﾞｰ	1	[5SV]
7	214A7-42071		BUSHING	ﾌﾞｯｼﾝｸﾞ	2	[5SV]
A2	230C7-40191		LEVER-ASSY,TILT	ﾃｨﾙﾄﾚﾊﾞｰｱｯｾﾝ	1	A,B,C,D,E,F:1-986 G:1-237 H,J,K:1-214 L:1-108 [5SV] INC.8,9
-	235C7-40191		LEVER-ASSY,TILT	ﾃｨﾙﾄﾚﾊﾞｰｱｯｾﾝ	1	A,B,C,D,E,F:987- G:238- H,J,K:215- L:109- [5SV] INC.8,9
8	NO PART NO.	#	LEVER,TILT	ﾚﾊﾞｰ	1	[5SV]
9	214A7-42071		BUSHING	ﾌﾞｯｼﾝｸﾞ	2	[5SV]
A3	230C7-40291		LEVER-ASSY,3RD	ｻｰﾄﾞﾚﾊﾞｰｱｯｾﾝ	1	A,B,C,D,E,F:1-986 G:1-237 H,J,K:1-214 L:1-108 [5SV] INC.10,11
-	235C7-40291		LEVER-ASSY,3RD	ｻｰﾄﾞﾚﾊﾞｰｱｯｾﾝ	1	A,B,C,D,E,F:987- G:238- H,J,K:215- L:109- [5SV] INC.10,11
10	NO PART NO.	#	LEVER,3RD	ﾚﾊﾞｰ	1	[5SV]
11	214A7-42071		BUSHING	ﾌﾞｯｼﾝｸﾞ	2	[5SV]
A4	230C7-40391		LEVER-ASSY,4TH	ﾌｫｰｽﾚﾊﾞｰｱｯｾﾝ	1	A,B,C,D,E,F:1-986 G:1-237 H,J,K:1-214 L:1-108 [5SV] INC.12,13
-	235C7-40391		LEVER-ASSY,4TH	ﾌｫｰｽﾚﾊﾞｰｱｯｾﾝ	1	A,B,C,D,E,F:987- G:238- H,J,K:215- L:109- [5SV] INC.12,13
12	NO PART NO.	#	LEVER,FOURTH	ﾚﾊﾞｰ	1	[5SV]
13	214A7-42071		BUSHING	ﾌﾞｯｼﾝｸﾞ	2	[5SV]
A5	230C7-40491		LEVER-ASSY,5TH	ﾌｨﾌｽﾚﾊﾞｰｱｯｾﾝ	1	A,B,C,D,E,F:1-986 G:1-237 H,J,K:1-214 L:1-108 [5SV] INC.14,15

FIG.119 VALVE CONTROL [5SV]

(F40473A0) ﾊﾞﾙﾌﾞｺﾝﾄﾛｰﾙ

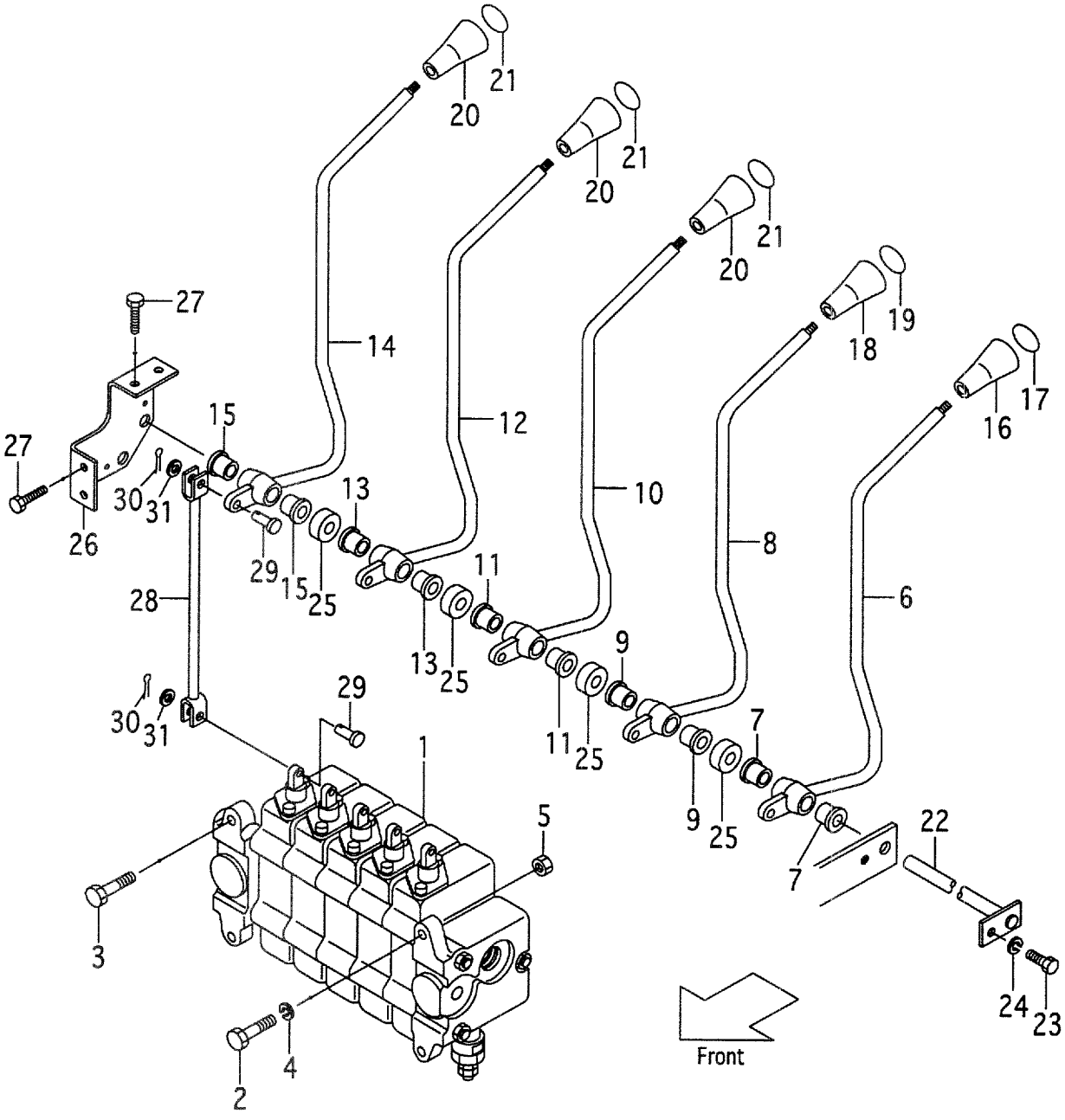

A:FD35C8 D:FD40T8 G:FD50T8 K:FG45T8
B:FD35T8 E:FD45C8 H:FG35T8 L:FG50T8
C:FD40C8 F:FD45T8 J:FG40T8

FIG.119
(F40473A0)

Item No	Part No.	Mark	Description		Req'd	Remarks : Serial No.
-	235C7-40491		LEVER-ASSY,5TH	ﾌｨﾌｽﾚﾊﾞｰｱｯｾﾝ	1	A,B,C,D,E,F:987- G:238- H,J,K:215- L:109- [5SV] INC.14,15
14	NO PART NO.	#	LEVER,5TH	ﾚﾊﾞｰ	1	[5SV]
15	214A7-42071		BUSHING	ﾌﾞｯｼﾝｸﾞ	2	[5SV]
16	214A7-42181		KNOB,LIFT	ﾉﾌﾞ	1	[5SV]
17	214A7-42191		DECAL,LIFT	ﾃﾞｶﾙ	1	[5SV]
18	214A7-42181		KNOB,TILT	ﾉﾌﾞ	1	[5SV]
19	214A7-42201		DECAL,TILT	ﾃﾞｶﾙ	1	[5SV]
20	NO PART NO.		KNOB,OTHERS	ﾉﾌﾞ	3	[5SV]
21	NO PART NO.		DECAL,OTHERS	ﾃﾞｶﾙ	3	[5SV]
22	224W7-42251		SHAFT,LEVER	ｼｬﾌﾄ	1	[5SV]
23	01100-06012		BOLT	ﾎﾞﾙﾄ	1	[5SV]
24	02010-00006		WASHER	ﾜｯｼｬ	1	[5SV]
25	23917-42161		SPACER	ｽﾍﾟｰｻ	4	[5SV]
26	235C7-42001		BRACKET	ﾌﾞﾗｹｯﾄ	1	[5SV]
27	216H3-92281		BOLT	ﾎﾞﾙﾄ	4	[5SV]
28	235C7-42021		JOINT	ｼﾞｮｲﾝﾄ	5	[5SV]
29	02262-08025		PIN	ﾋﾟﾝ	10	[5SV]
30	02200-02016		PIN	ﾋﾟﾝ	10	[5SV]
31	02000-00008		WASHER	ﾜｯｼｬ	10	[5SV]

FIG.120 INLET SECTION
(F40473B0) インレットセクション

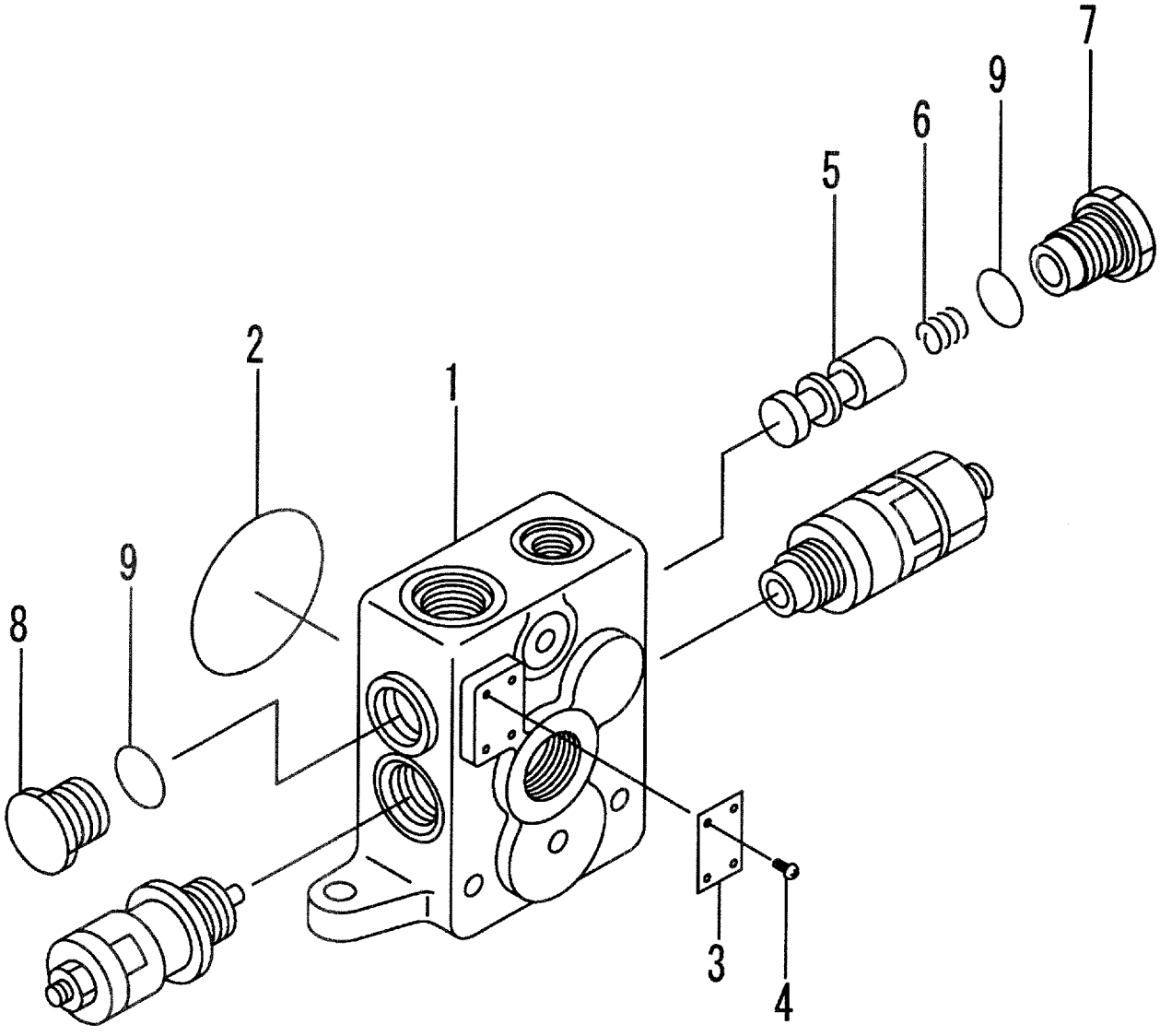

A:FD35C8:491- D:FD40T8:491- G:FD50T8:173- K:FG45T8:172-
B:FD35T8:491- E:FD45C8:491- H:FG35T8:172- L:FG50T8:107-
C:FD40C8:491- F:FD45T8:491- J:FG40T8:172-

FIG.120
(F40473B0)

Item No	Part No.	Mark	Description		Req'd	Remarks : Serial No.
A1	B-C0013-40006		SECTION-ASSY,INLET	ｲﾝﾚｯﾄｾｸｼｮﾝｱｯｾﾝ	1	INC.1-9
1	NO PART NO.	#	HOUSING	ﾊｳｼﾞﾝｸﾞ	1	
2	B-21001-00334		O-RING	Oﾘﾝｸﾞ	1	
3	NO PART NO.	#	PLATE,NAME	ﾌﾟﾚｰﾄ	1	
4	NO PART NO.	#	SCREW	ｽｸﾘｭ	4	
5	NO PART NO.	#	SPOOL	ｽﾌﾟｰﾙ	1	
6	B-21731-30801		SPRING	ｽﾌﾟﾘﾝｸﾞ	1	
7	B-21001-90241		PLUG	ﾌﾟﾗｸﾞ	1	
8	B-21001-00581		PLUG	ﾌﾟﾗｸﾞ	1	
9	B-21001-00098		O-RING	Oﾘﾝｸﾞ	2	

FIG.121 SPOOL SECTION (LIFT)

(F40473C0) スプールセクション

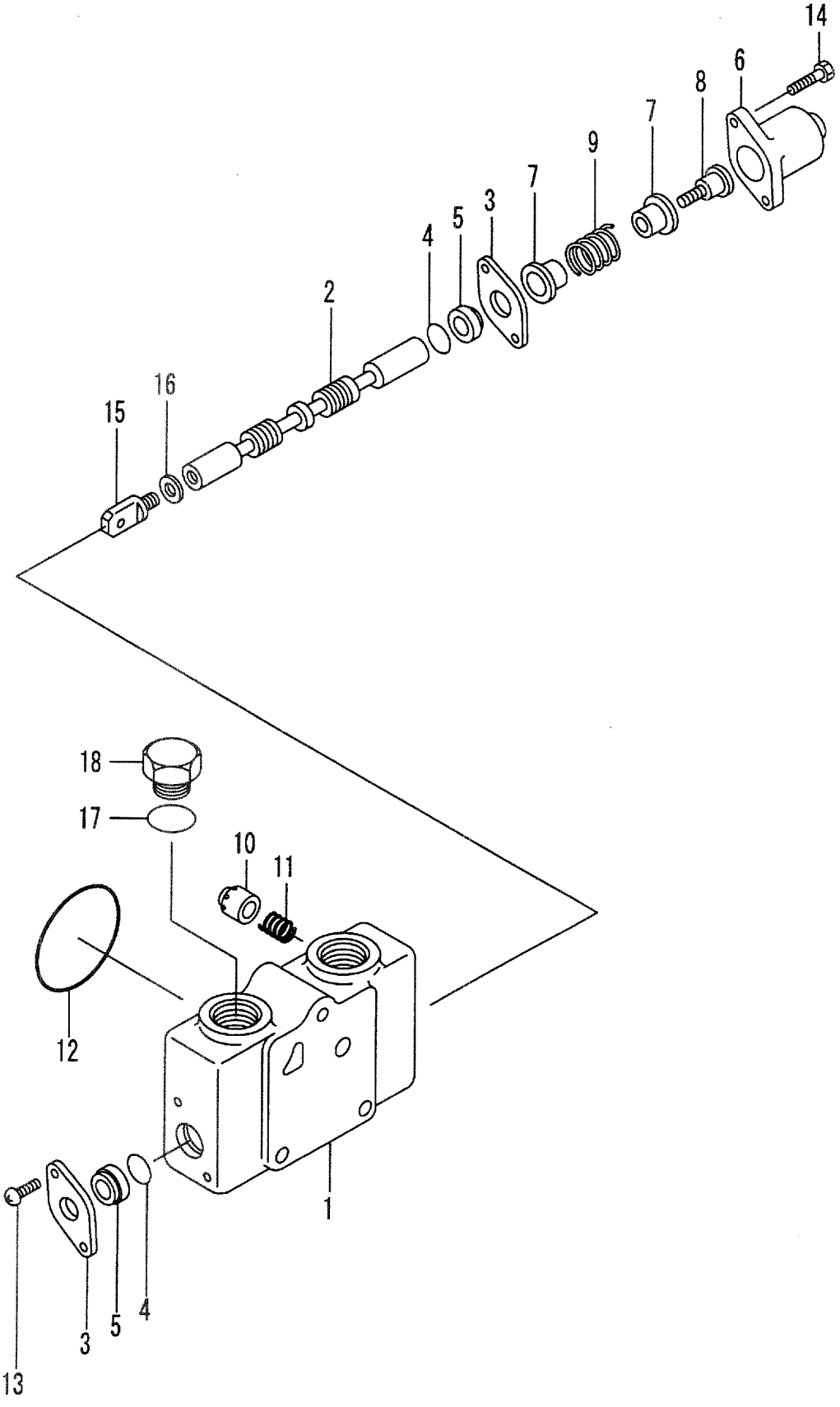

A:FD35C8:491- D:FD40T8:491- G:FD50T8:173- K:FG45T8:172-
B:FD35T8:491- E:FD45C8:491- H:FG35T8:172- L:FG50T8:107-
C:FD40C8:491- F:FD45T8:491- J:FG40T8:172-

FIG.121
(F40473C0)

Item No	Part No.	Mark	Description		Req'd	Remarks : Serial No.
A1	B-21013-40666		SECTION-ASSY,SPOOL	ｽﾌﾟｰﾙｾｸｼｮﾝｱｯｾﾝ	1	(LIFT) INC.1-18
1	NO PART NO.	#	HOUSING	ﾊｳｼﾞﾝｸﾞ	1	
2	NO PART NO.	#	SPOOL	ｽﾌﾟｰﾙ	1	
3	B-21111-40602		PLATE	ﾌﾟﾚｰﾄ	2	
4	B-21001-00690		O-RING	Oﾘﾝｸﾞ	2	
5	B-21111-43001		WIPER	ﾜｲﾊﾟ	2	
6	B-21111-40907		CAP	ｷｬｯﾌﾟ	1	
7	B-21111-40706		SEAT	ｼｰﾄ	2	
8	B-21111-40407		SCREW	ｽｸﾘｭ	1	
9	B-21111-40504		SPRING	ｽﾌﾟﾘﾝｸﾞ	1	
10	B-21011-40701	*	POPPET	ﾎﾟﾍﾟｯﾄ	1	
11	B-21011-40801	*	SPRING	ｽﾌﾟﾘﾝｸﾞ	1	
12	B-21001-00334		O-RING	Oﾘﾝｸﾞ	1	
13	B-91111-60102		SCREW	ｽｸﾘｭ	2	
14	B-92702-06221		BOLT	ﾎﾞﾙﾄ	2	
15	B-21011-40601		HEAD	ﾍｯﾄﾞ	1	
16	B-94101-10252		WASHER	ﾜｯｼｬ	1	
17	B-21001-00213		O-RING	Oﾘﾝｸﾞ	1	
18	B-21001-00212		PLUG	ﾌﾟﾗｸﾞ	1	
K1	B-21003-40072		KIT,CHECK	ﾁｪｯｸｷｯﾄ	1	INC.10,11

FIG.122 SPOOL SECTION (TILT)

(F40473D0) スプールセクション

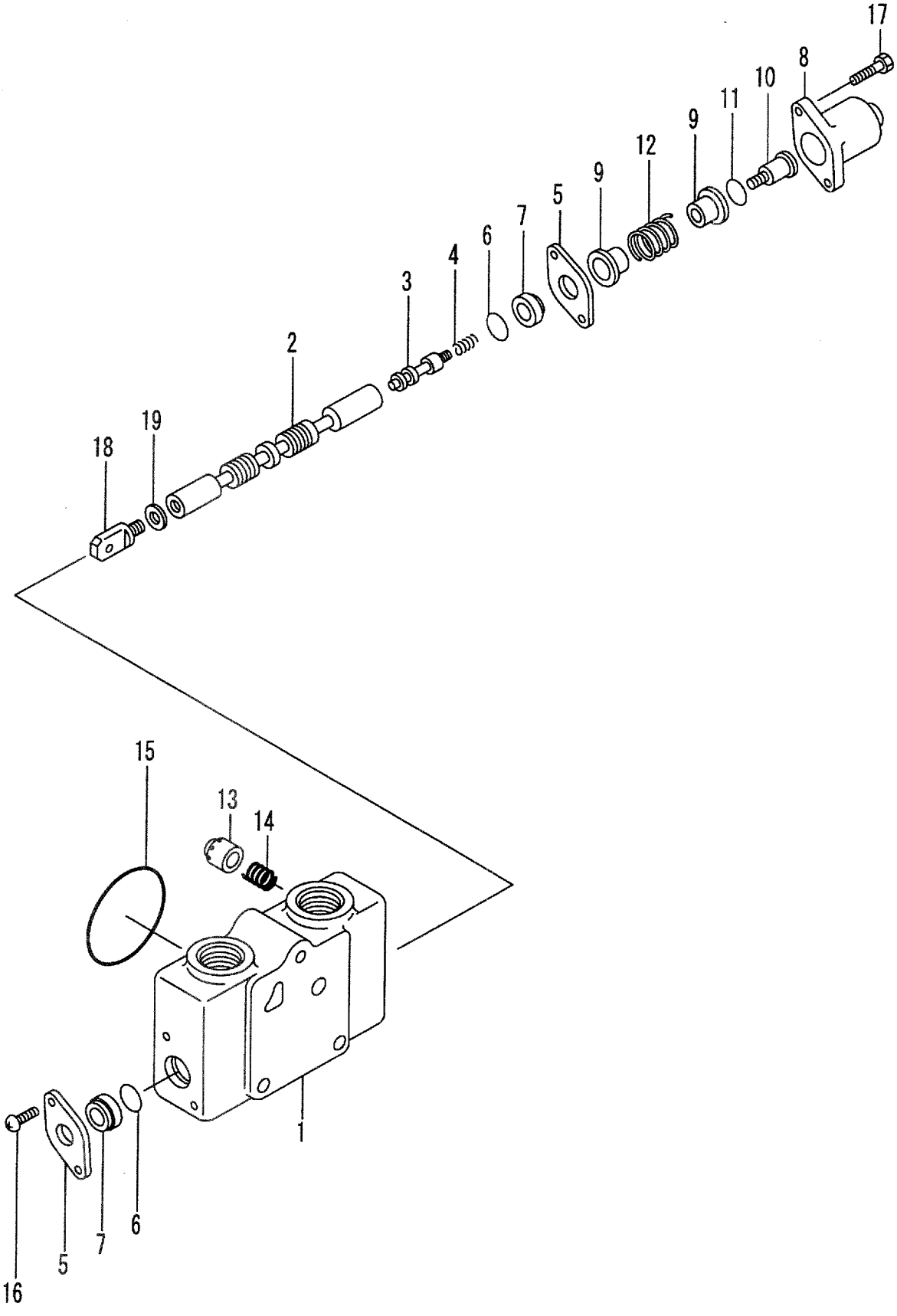

A:FD35C8:491- D:FD40T8:491- G:FD50T8:173- K:FG45T8:172-
B:FD35T8:491- E:FD45C8:491- H:FG35T8:172- L:FG50T8:107-
C:FD40C8:491- F:FD45T8:491- J:FG40T8:172-

FIG.122
(F40473D0)

Item No	Part No.	Mark	Description		Req'd	Remarks : Serial No.
A1	B-C0013-41049		SECTION-ASSY,SPOOL	ｽﾌﾟｰﾙｾｸｼｮﾝｱｯｾﾝ	1	(TILT) INC.1-19
1	NO PART NO.	#	HOUSING	ﾊｳｼﾞﾝｸﾞ	1	
2	NO PART NO.	#	SPOOL	ｽﾌﾟｰﾙ	1	
3	B-T1451-10001		POPPET	ﾎﾟﾍﾟｯﾄ	1	
4	B-21011-40840		SPRING	ｽﾌﾟﾘﾝｸﾞ	1	
5	B-21111-40602		PLATE	ﾌﾟﾚｰﾄ	2	
6	B-21001-00690	*	O-RING	Oﾘﾝｸﾞ	2	
7	B-21111-43001	*	WIPER	ﾜｲﾊﾟ	2	
8	B-21111-40907	*	CAP	ｷｬｯﾌﾟ	1	
9	B-21111-40708		SEAT	ｼｰﾄ	2	
10	B-21011-42009		SCREW	ｽｸﾘｭ	1	
11	B-21001-00266	*	O-RING	Oﾘﾝｸﾞ	1	
12	B-21111-40504		SPRING	ｽﾌﾟﾘﾝｸﾞ	1	
13	B-21011-40701	*	POPPET	ﾎﾟﾍﾟｯﾄ	1	
14	B-21011-40801	*	SPRING	ｽﾌﾟﾘﾝｸﾞ	1	
15	B-21001-00334	*	O-RING	Oﾘﾝｸﾞ	1	
16	B-91111-60102		SCREW	ｽｸﾘｭ	2	
17	B-92703-06221	*	BOLT	ﾎﾞﾙﾄ	2	
18	B-21011-40601		HEAD	ﾍｯﾄﾞ	1	
19	B-94101-10252		WASHER	ﾜｯｼｬ	1	
K1	B-2101A-40002		KIT,SEAL	ｼｰﾙｷｯﾄ	1	INC.6,7,11,15
K2	B-21003-40010		KIT,CAP	ｷｬｯﾌﾟｷｯﾄ	1	INC.8,17
K3	B-21003-40072		KIT,CHECK	ﾁｪｯｸｷｯﾄ	1	INC.13,14

FIG.123 SPOOL SECTION (ATT)

(F40473E0) スプールセクション

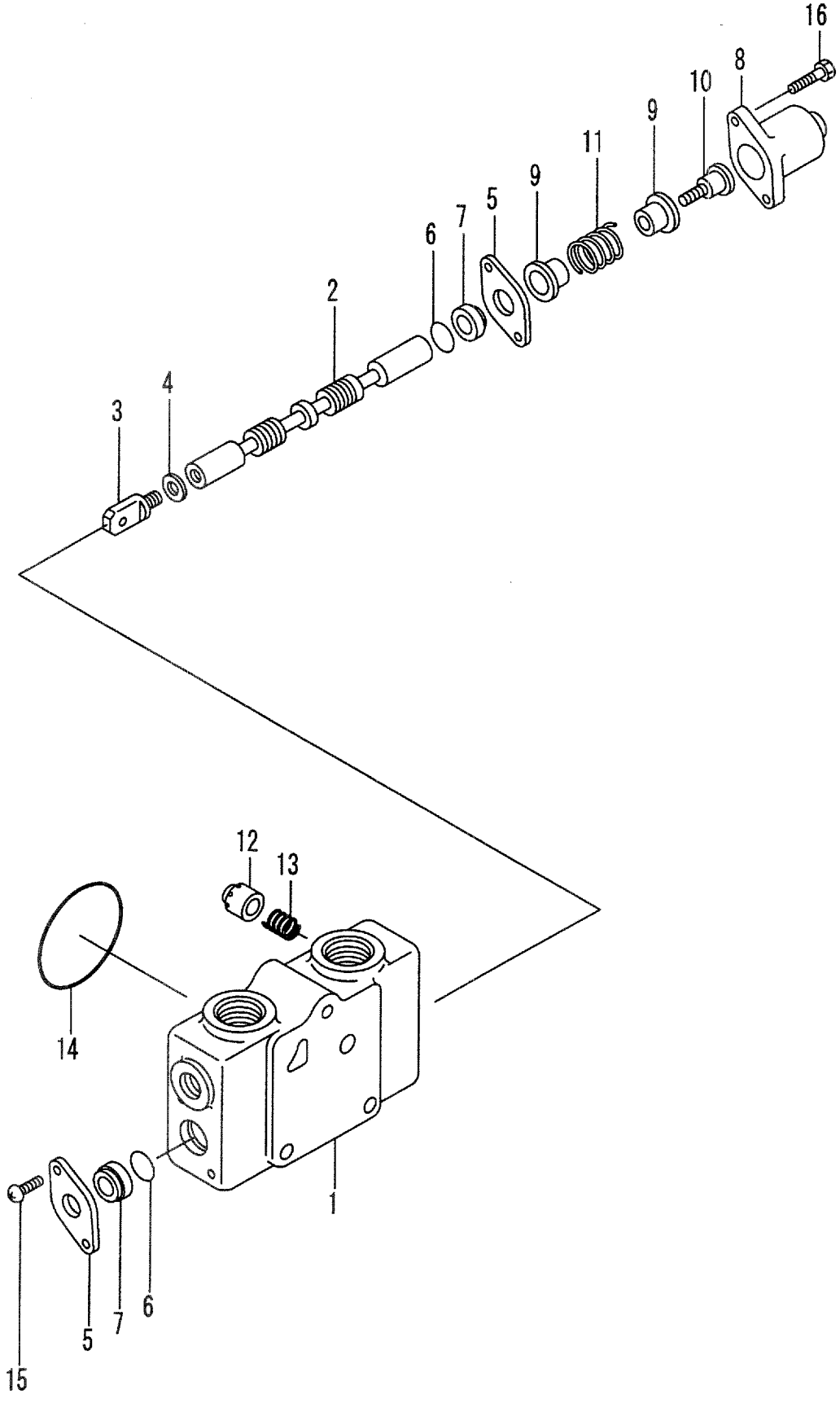

A:FD35C8:491- D:FD40T8:491- G:FD50T8:173- K:FG45T8:172-
B:FD35T8:491- E:FD45C8:491- H:FG35T8:172- L:FG50T8:107-
C:FD40C8:491- F:FD45T8:491- J:FG40T8:172-

FIG.123
(F40473E0)

Item No	Part No.	Mark	Description		Req'd	Remarks : Serial No.
A1	B-21013-47307		SECTION-ASSY,SPOOL	ｽﾌﾟｰﾙｾｸｼｮﾝｱｯｾﾝ	1	[3SV](ATT) INC.1-16
-	B-21013-47307		SECTION-ASSY,SPOOL	ｽﾌﾟｰﾙｾｸｼｮﾝｱｯｾﾝ	2	[4SV](ATT) INC.1-16
-	B-21013-47307		SECTION-ASSY,SPOOL	ｽﾌﾟｰﾙｾｸｼｮﾝｱｯｾﾝ	3	[5SV](ATT) INC.1-16
1	NO PART NO.	#	HOUSING	ﾊｳｼﾞﾝｸﾞ	1	[3SV]
-	NO PART NO.	#	HOUSING	ﾊｳｼﾞﾝｸﾞ	2	[4SV]
-	NO PART NO.	#	HOUSING	ﾊｳｼﾞﾝｸﾞ	3	[5SV]
2	NO PART NO.	#	SPOOL	ｽﾌﾟｰﾙ	1	[3SV]
-	NO PART NO.	#	SPOOL	ｽﾌﾟｰﾙ	2	[4SV]
-	NO PART NO.	#	SPOOL	ｽﾌﾟｰﾙ	3	[5SV]
3	B-21011-40601		HEAD	ﾍｯﾄﾞ	1	[3SV]
-	B-21011-40601		HEAD	ﾍｯﾄﾞ	2	[4SV]
-	B-21011-40601		HEAD	ﾍｯﾄﾞ	3	[5SV]
4	B-94101-10252		WASHER	ﾜｯｼｬ	1	[3SV]
-	B-94101-10252		WASHER	ﾜｯｼｬ	2	[4SV]
-	B-94101-10252		WASHER	ﾜｯｼｬ	3	[5SV]
5	B-21111-40602		PLATE	ﾌﾟﾚｰﾄ	2	[3SV]
-	B-21111-40602		PLATE	ﾌﾟﾚｰﾄ	4	[4SV]
-	B-21111-40602		PLATE	ﾌﾟﾚｰﾄ	6	[5SV]
6	B-21001-00690		O-RING	Oﾘﾝｸﾞ	2	[3SV]
-	B-21001-00690		O-RING	Oﾘﾝｸﾞ	4	[4SV]
-	B-21001-00690		O-RING	Oﾘﾝｸﾞ	6	[5SV]
7	B-21111-43001		WIPER	ﾜｲﾊﾟ	2	[3SV]
-	B-21111-43001		WIPER	ﾜｲﾊﾟ	4	[4SV]
-	B-21111-43001		WIPER	ﾜｲﾊﾟ	6	[5SV]
8	B-21111-40907		CAP	ｷｬｯﾌﾟ	1	[3SV]
-	B-21111-40907		CAP	ｷｬｯﾌﾟ	2	[4SV]
-	B-21111-40907		CAP	ｷｬｯﾌﾟ	3	[5SV]
9	B-21111-40706		SEAT	ｼｰﾄ	2	[3SV]
-	B-21111-40706		SEAT	ｼｰﾄ	4	[4SV]
-	B-21111-40706		SEAT	ｼｰﾄ	6	[5SV]
10	B-21111-40407		SCREW	ｽｸﾘｭ	1	[3SV]
-	B-21111-40407		SCREW	ｽｸﾘｭ	2	[4SV]
-	B-21111-40407		SCREW	ｽｸﾘｭ	3	[5SV]
11	B-21111-40504		SPRING	ｽﾌﾟﾘﾝｸﾞ	1	[3SV]
-	B-21111-40504		SPRING	ｽﾌﾟﾘﾝｸﾞ	2	[4SV]
-	B-21111-40504		SPRING	ｽﾌﾟﾘﾝｸﾞ	3	[5SV]
12	B-21011-40701		POPPET	ﾎﾟﾍﾟｯﾄ	1	[3SV]
-	B-21011-40701		POPPET	ﾎﾟﾍﾟｯﾄ	2	[4SV]
-	B-21011-40701		POPPET	ﾎﾟﾍﾟｯﾄ	3	[5SV]
13	B-21011-40801		SPRING	ｽﾌﾟﾘﾝｸﾞ	1	[3SV]
-	B-21011-40801		SPRING	ｽﾌﾟﾘﾝｸﾞ	2	[4SV]
-	B-21011-40801		SPRING	ｽﾌﾟﾘﾝｸﾞ	3	[5SV]
14	B-21001-00334		O-RING	Oﾘﾝｸﾞ	1	[3SV]
-	B-21001-00334		O-RING	Oﾘﾝｸﾞ	2	[4SV]
-	B-21001-00334		O-RING	Oﾘﾝｸﾞ	3	[5SV]
15	B-91111-60102		SCREW	ｽｸﾘｭ	2	[3SV]
-	B-91111-60102		SCREW	ｽｸﾘｭ	4	[4SV]
-	B-91111-60102		SCREW	ｽｸﾘｭ	6	[5SV]
16	B-92702-06221		BOLT	ﾎﾞﾙﾄ	2	[3SV]
-	B-92702-06221		BOLT	ﾎﾞﾙﾄ	4	[4SV]

FIG.123 SPOOL SECTION (ATT)

(F40473E0) スプールセクション

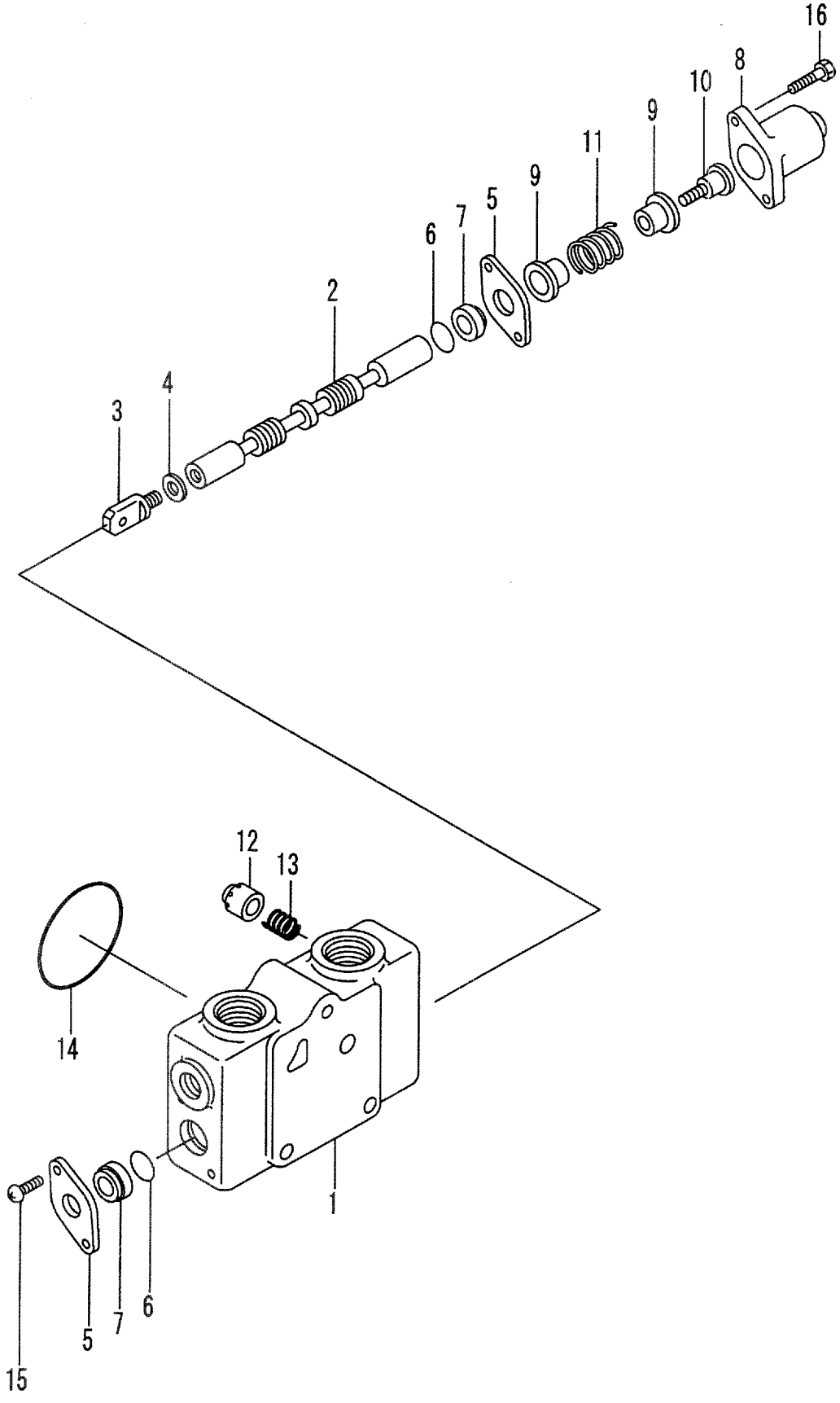

A:FD35C8:491- D:FD40T8:491- G:FD50T8:173- K:FG45T8:172-
B:FD35T8:491- E:FD45C8:491- H:FG35T8:172- L:FG50T8:107-
C:FD40C8:491- F:FD45T8:491- J:FG40T8:172-

FIG.123
(F40473E0)

Item No	Part No.	Mark	Description	Req'd	Remarks : Serial No.
-	B-92702-06221		BOLT ﾎﾞﾙﾄ	6	[5SV]

FIG.124 OUTLET SECTION
(F40473F0) アウトレットセクション

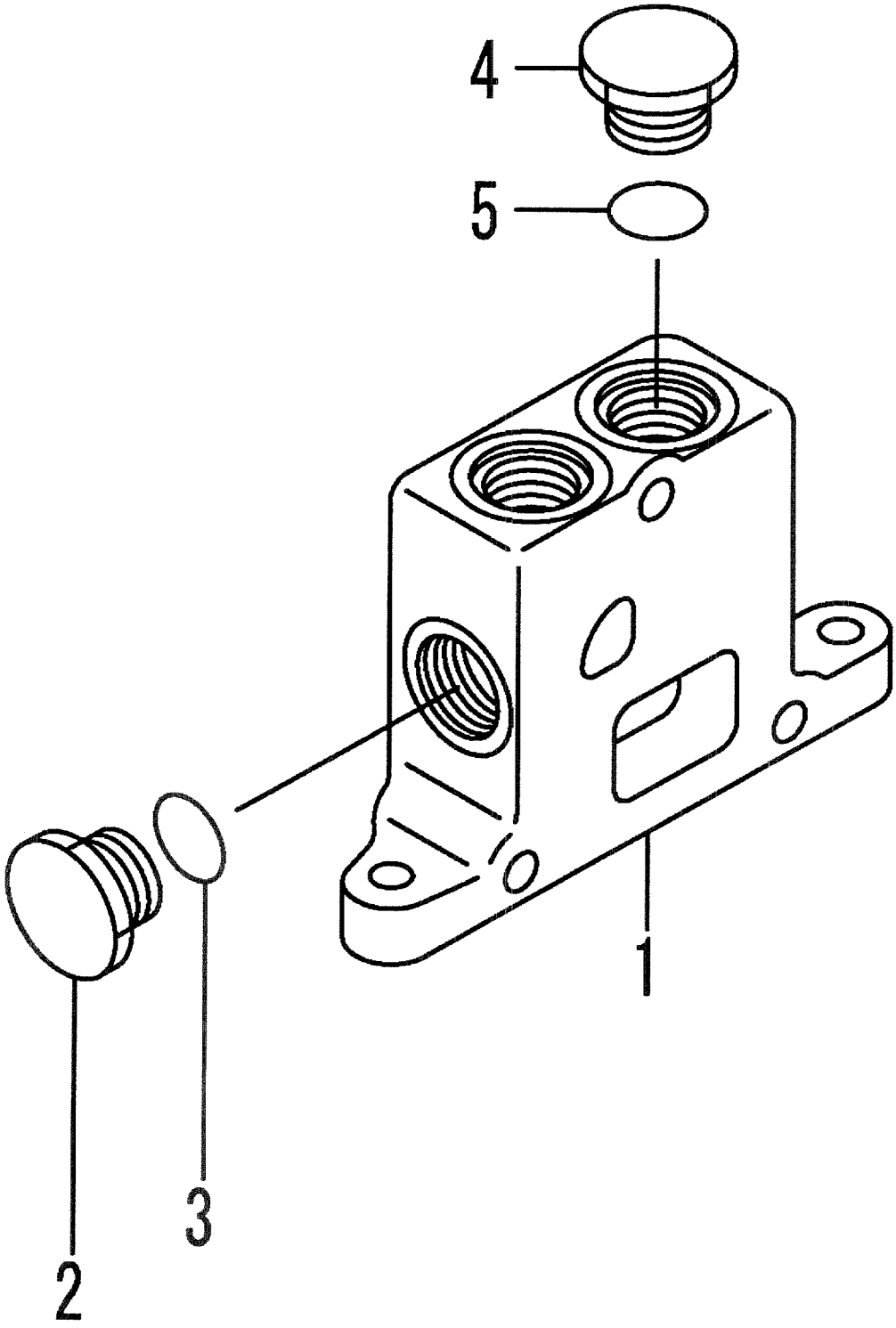

A:FD35C8:491- D:FD40T8:491- G:FD50T8:173- K:FG45T8:172-
B:FD35T8:491- E:FD45C8:491- H:FG35T8:172- L:FG50T8:107-
C:FD40C8:491- F:FD45T8:491- J:FG40T8:172-

FIG.124
(F40473F0)

Item No	Part No.	Mark	Description		Req'd	Remarks : Serial No.
A1	B-21013-40402		SECTION-ASSY,OUTLET	ｱｳﾄﾚｯﾄｾｸｼｮﾝｱｯｾﾝ	1	INC.1-5
1	NO PART NO.	#	HOUSING	ﾊｳｼﾞﾝｸﾞ	1	
2	B-21001-00258		PLUG	ﾌﾟﾗｸﾞ	1	
3	B-21001-00098		O-RING	Oﾘﾝｸﾞ	1	
4	B-21001-00212		PLUG	ﾌﾟﾗｸﾞ	1	
5	B-21001-00213		O-RING	Oﾘﾝｸﾞ	1	

FIG.125 HYDRAULIC LINE (MAIN)(1/4)

(F4047610) ﾊｲﾄﾞﾛﾘｯｸﾗｲﾝ(ﾒｲﾝ)(1/4)

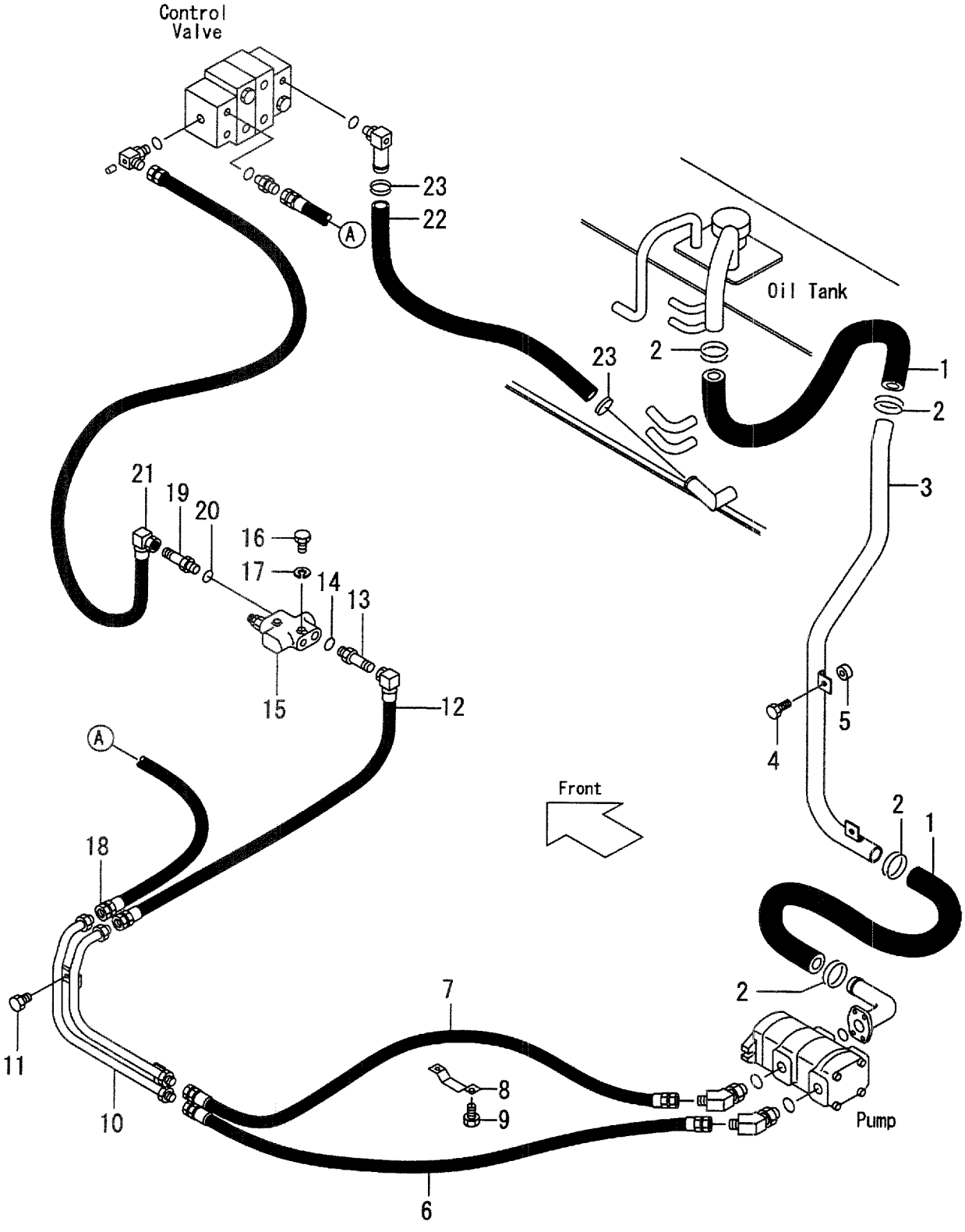

A:FD35C8 D:FD40T8 G:FD50T8 K:FG45T8
B:FD35T8 E:FD45C8 H:FG35T8 L:FG50T8
C:FD40C8 F:FD45T8 J:FG40T8

FIG.125
(F4047610)

Item No	Part No.	Mark	Description		Req'd	Remarks : Serial No.
1	223W7-62052		HOSE	ホース	2	
2	04911-00055		CLIP	クリップ	4	
3	235C7-60001		PIPE	パイプ	1	
4	01100-10025		BOLT	ボルト	2	
5	22252-32241		RUBBER	ラバー	2	
6	235C7-62031		HOSE,HP	ホース	1	
7	235C7-62041		HOSE,HP	ホース	1	
8	224W7-62321		CLAMP	クランプ	2	
9	01185-08020		BOLT	ボルト	4	
10	224W7-60151		PIPE	パイプ	1	A,C,E
-	224X7-60551		PIPE	パイプ	1	B,D,F,G,H,J,K,L
11	01185-08040		BOLT	ボルト	1	
12	224W7-60461		HOSE	ホース	1	
13	224W7-62391		NIPPLE	ニップル	1	
14	03320-00180		O-RING	Oリング	1	
15	235C7-60101		VALVE,PRIORITY	バルブ	1	A,B,C,D,E,F:1-1013 G:1-242 H,J,K:1-214 L:1-108
-	224W7-60552		VALVE,PRIORITY	バルブ	1	A,B,C,D,E,F:1014- G:243- H,J,K:215- L:109-
16	01100-06055		BOLT	ボルト	2	
17	02010-00006		WASHER	ワッシャ	2	
18	224W7-62351		HOSE,HP	ホース	1	A,B,C,D,E,F:1-107 G:1-101 H,J,K,L:1-102
-	235C7-62021		HOSE,HP	ホース	1	A,B,C,D,E,F:108- G:102- H,J,K,L:103-
19	224W7-62391		NIPPLE	ニップル	1	
20	03320-00180		O-RING	Oリング	1	
21	224W7-60451		HOSE	ホース	1	A,B,C,D,E,F:1-107 G:1-101 H,J,K,L:1-102
-	235C7-62051		HOSE	ホース	1	A,B,C,D,E,F:108-188 G:102-106 H,J,K,L:102-102
-	224W7-60451		HOSE	ホース	1	A,B,C,D,E,F:189- G:107- H,J,K,L:103-
22	04700-14120		HOSE,LP	ホース	1	
23	04911-00053		CLIP	クリップ	2	

FIG.126 HYDRAULIC LINE (MAIN)(2/4)

(F4047620) ﾊｲﾄﾞﾛﾘｯｸﾗｲﾝ(ﾒｲﾝ)(2/4)

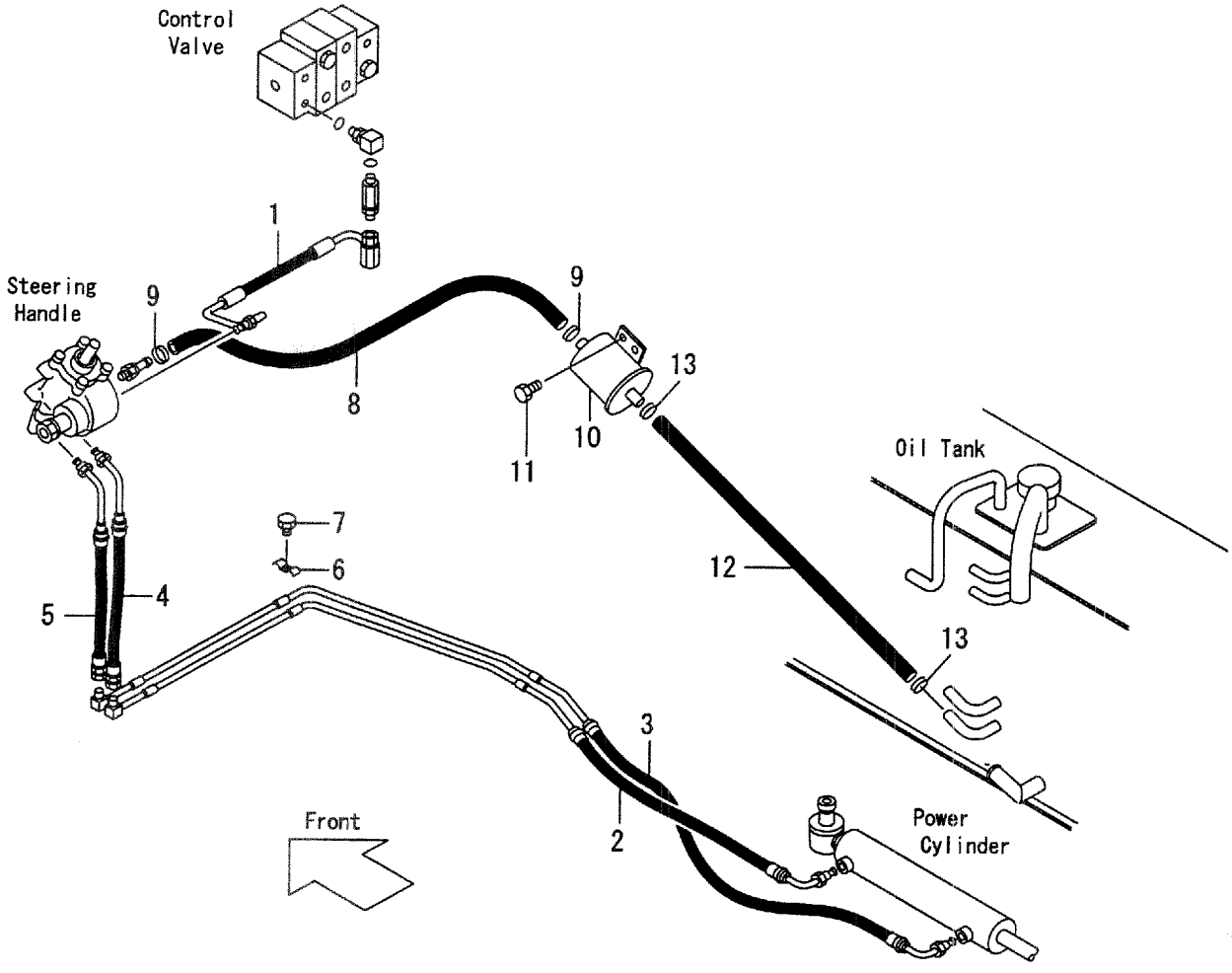

A:FD35C8 D:FD40T8 G:FD50T8 K:FG45T8
B:FD35T8 E:FD45C8 H:FG35T8 L:FG50T8
C:FD40C8 F:FD45T8 J:FG40T8

FIG.126
(F4047620)

Item No	Part No.	Mark	Description		Req'd	Remarks : Serial No.
1	224W7-62101		HOSE	ホース	1	A,B,C,D,E,F:1-107 G:1-101 H,J,K,L:1-102
-	235C7-62131		HOSE	ホース	1	A,B,C,D,E,F:108- G:102- H,J,K,L:103-
2	224W7-62021		HOSE	ホース	1	A,B,C,D,E,F,H,J,K
-	235H7-62031		HOSE	ホース	1	G,L
3	224W7-62031		HOSE	ホース	1	A,B,C,D,E,F,H,J,K
-	235H7-62041		HOSE	ホース	1	G,L
4	224W7-62281		HOSE	ホース	1	A,B,C,D,E,F:1-107 G:1-101 H,J,K,L:1-102
-	235C7-62141		HOSE	ホース	1	A,B,C,D,E,F:108- G:102- H,J,K,L:103-
5	224W7-62291		HOSE	ホース	1	A,B,C,D,E,F:1-107 G:1-101 H,J,K,L:1-102
-	235C7-62151		HOSE	ホース	1	A,B,C,D,E,F:108- G:102- H,J,K,L:103-
6	20317-60331		BAND	ﾊﾞﾝﾄﾞ	3	
7	01183-08025		BOLT	ﾎﾞﾙﾄ	3	
8	04710-06097		HOSE,LP	ホース	1	A,B,C,D,E,F:1-245 G:1-127 H,J,K:1-105 L:1-102
-	04710-06147		HOSE,LP	ホース	1	A,B,C,D,E,F:246-449 G:128-165 H,J,K:106-155 L:103-105
-	04710-06102		HOSE,LP	ホース	1	A,B,C,D,E,F:450- G:166- H,J,K:156- L:106-
9	04911-00030		CLIP	ｸﾘｯﾌﾟ	2	
10	25787-82001		FILTER,OIL	ﾌｨﾙﾀ	1	
11	01185-08012		BOLT	ﾎﾞﾙﾄ	2	
12	04710-06018		HOSE,LP	ホース	1	A,B,C,D,E,F:1-107 G:1-101 H,J,K,L:1-102
-	04710-06020		HOSE,LP	ホース	1	A,B,C,D,E,F:108- G:102- H,J,K,L:103-
13	04911-00030		CLIP	ｸﾘｯﾌﾟ	2	

FIG.127 HYDRAULIC LINE(MAIN)(2/4)[OBT]

(F4047680) ﾊｲﾄﾞﾛﾘｯｸﾗｲﾝ(ﾒｲﾝ)(2/4)

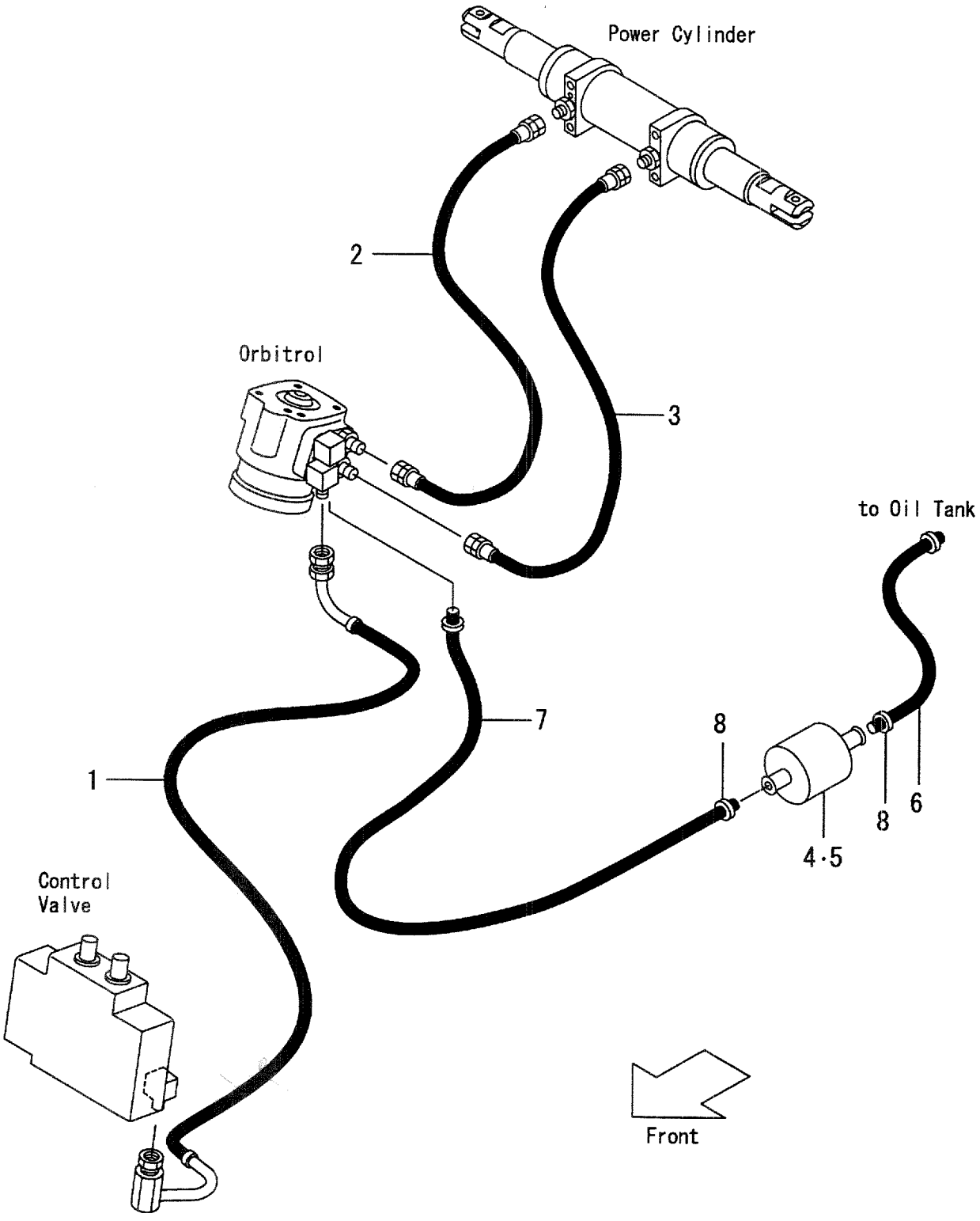

A:FD35C8 D:FD40T8 G:FD50T8 K:FG45T8
B:FD35T8 E:FD45C8 H:FG35T8 L:FG50T8
C:FD40C8 F:FD45T8 J:FG40T8

FIG.127
(F4047680)

Item No	Part No.	Mark	Description		Req'd	Remarks : Serial No.
1	524W2-42701		HOSE & PIPE	ﾎｰｽ&ﾊﾟｲﾌﾟ	1	[OBT]
2	524W2-42551		HOSE	ﾎｰｽ	1	A,B,C,D,E,F:1-188 H,J,K:1-102 [OBT]
-	535C2-42011		HOSE	ﾎｰｽ	1	A,B,C,D,E,F:189- H,J,K:103- [OBT]
-	535C2-42011		HOSE	ﾎｰｽ	1	G:1-127 L:1-102 [OBT]
-	535H2-42011		HOSE	ﾎｰｽ	1	G:128- L:103- [OBT]
3	524W2-42541		HOSE	ﾎｰｽ	1	A,B,C,D,E,F:1-188 H,J,K:1-102 [OBT]
-	535C2-42001		HOSE	ﾎｰｽ	1	A,B,C,D,E,F:189- H,J,K:103- [OBT]
-	535C2-42001		HOSE	ﾎｰｽ	1	G:1-127 L:1-102 [OBT]
-	535H2-42001		HOSE	ﾎｰｽ	1	G:128- L:103- [OBT]
4	25787-82001		FILTER,OIL	ﾌｨﾙﾀ	1	[OBT]
5	01185-08012		BOLT,FILTER	ﾎﾞﾙﾄ	2	[OBT]
6	04710-06020		HOSE	ﾎｰｽ	1	[OBT]
7	04710-06120		HOSE	ﾎｰｽ	1	[OBT]
8	04911-00030		CLIP	ｸﾘｯﾌﾟ	4	[OBT]

FIG.128 HYDRAULIC LINE (MAIN)(3/4)

(F4047630) ﾊｲﾄﾞﾛﾘｯｸﾗｲﾝ(ﾒｲﾝ)(3/4)

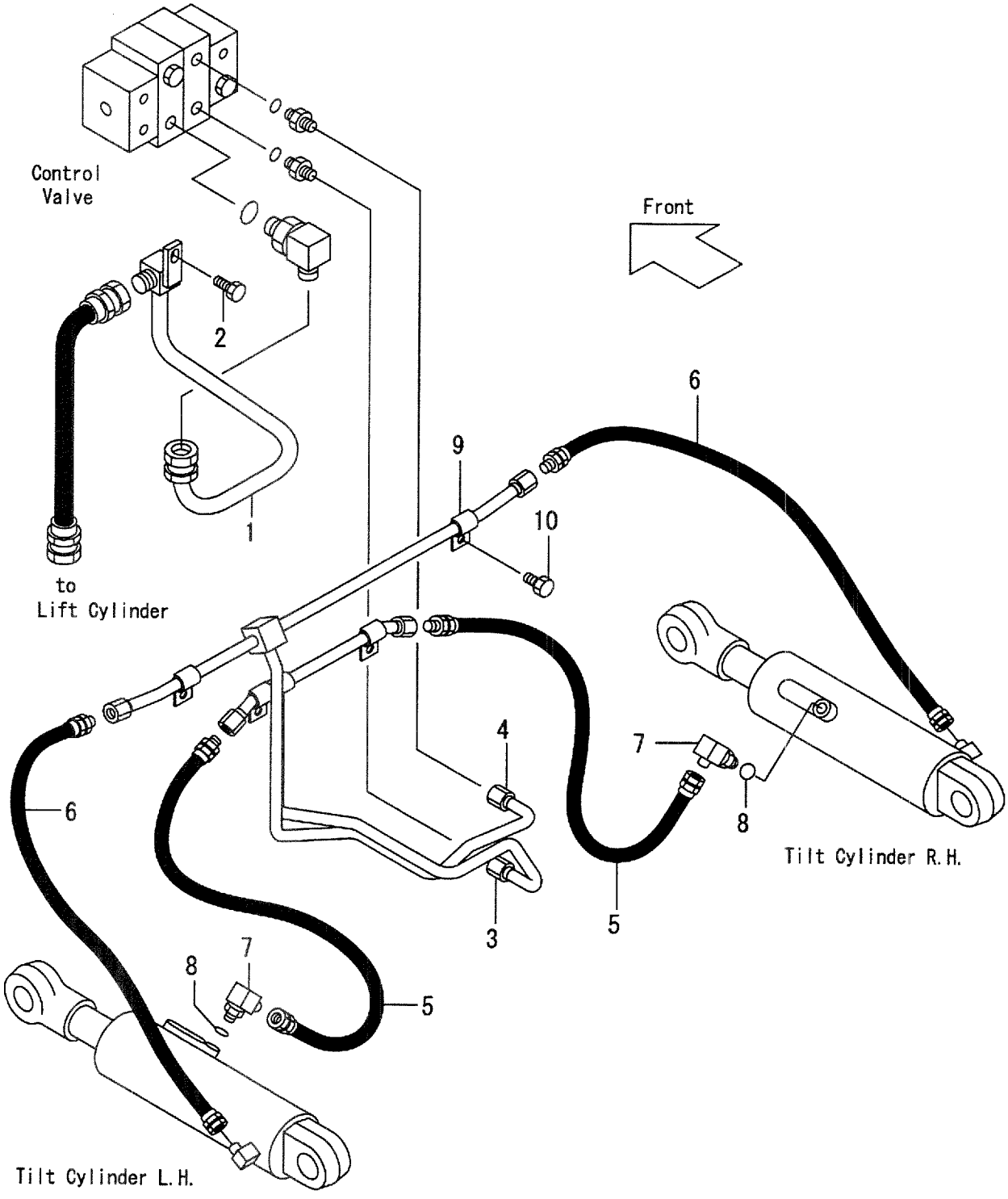

A:FD35C8 D:FD40T8 G:FD50T8 K:FG45T8
B:FD35T8 E:FD45C8 H:FG35T8 L:FG50T8
C:FD40C8 F:FD45T8 J:FG40T8

FIG.128
(F4047630)

Item No	Part No.	Mark	Description		Req'd	Remarks : Serial No.
1	224W7-60331		PIPE	ﾊﾟｲﾌﾟ	1	
2	01186-10025		BOLT	ﾎﾞﾙﾄ	1	
3	235C7-62211		PIPE,FRONT	ﾊﾟｲﾌﾟ	1	
4	235C7-62221		PIPE,REAR	ﾊﾟｲﾌﾟ	1	
5	235C7-62231		HOSE,HP,FRONT	ﾎｰｽ	2	
6	235C7-62241		HOSE,HP,REAR	ﾎｰｽ	2	
7	04150-00303		ELBOW	ｴﾙﾎﾞ	2	
8	03320-00140		O-RING	Oﾘﾝｸﾞ	2	
9	224W7-62301		CLAMP	ｸﾗﾝﾌﾟ	4	
10	01185-08016		BOLT	ﾎﾞﾙﾄ	4	

FIG.129 HYDRAULIC LINE (MAIN)(4/4)(C-TYPE)

(F4047640) ﾊｲﾄﾞﾛﾘｯｸﾗｲﾝ(ﾒｲﾝ)(4/4)

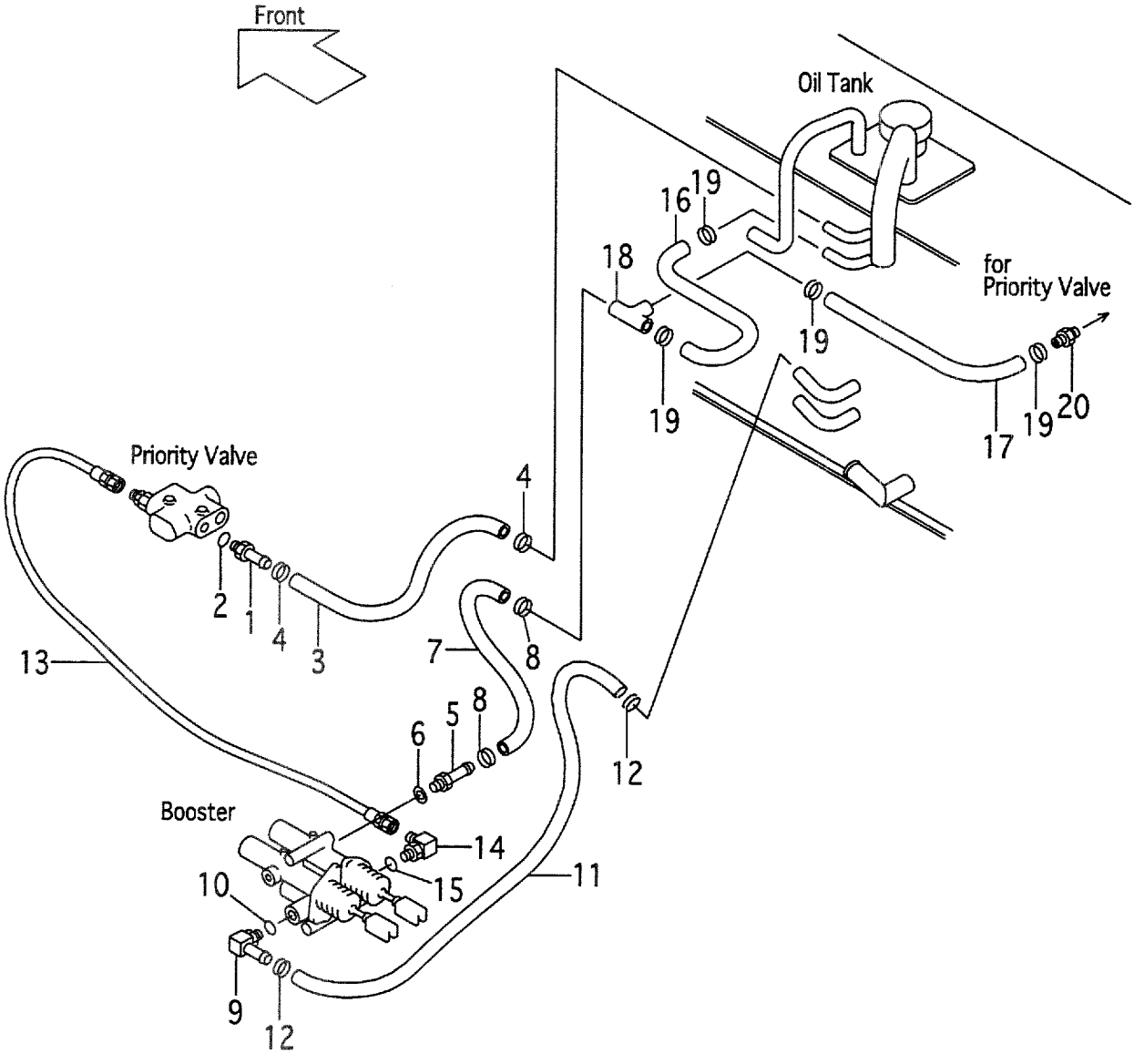

A:FD35C8 D:FD40T8 G:FD50T8 K:FG45T8
B:FD35T8 E:FD45C8 H:FG35T8 L:FG50T8
C:FD40C8 F:FD45T8 J:FG40T8

FIG.129
(F4047640)

Item No	Part No.	Mark	Description		Req'd	Remarks : Serial No.
A1	57246-04101		FITTING-ASSY	ﾌｨｯﾃｨﾝｸﾞｱｯｾﾝ	1	A,C,E:1-107
						INC.1,2
1	NO PART NO.	#	FITTING	ﾌｨｯﾃｨﾝｸﾞ	1	A,C,E:1-107
2	03320-00140		O-RING	Oﾘﾝｸﾞ	1	A,C,E:1-107
3	04710-04040		HOSE,LP	ﾎｰｽ	1	A,C,E:1-107
4	04911-00022		CLIP	ｸﾘｯﾌﾟ	2	A,C,E:1-107
5	214A7-62331		NIPPLE	ﾆｯﾌﾟﾙ	1	A,C,E
6	214A7-62341		PACKING	ﾊﾟｯｷﾝｸﾞ	1	A,C,E
7	04710-04117		HOSE,LP	ﾎｰｽ	1	A,C,E:1-188
-	04710-04170		HOSE,LP	ﾎｰｽ	1	A,C,E:189-1013
-	04710-04130		HOSE,LP	ﾎｰｽ	1	A,C,E:1014-
8	04911-00022		CLIP	ｸﾘｯﾌﾟ	2	A,C,E
A2	224W7-60311		ELBOW-ASSY	ｴﾙﾎﾞｱｯｾﾝ	1	A,C,E
						INC.9,10
9	NO PART NO.	#	ELBOW	ｴﾙﾎﾞ	1	A,C,E
10	89140-00006		O-RING	Oﾘﾝｸﾞ	1	A,C,E
11	04710-04190		HOSE,LP	ﾎｰｽ	1	A,C,E:1-245
-	04710-04150		HOSE,LP	ﾎｰｽ	1	A,C,E:246-
12	04911-00022		CLIP	ｸﾘｯﾌﾟ	2	A,C,E
13	224W7-62231		HOSE,HP	ﾎｰｽ	1	A,C,E
A3	224W7-60351		ELBOW-ASSY	ｴﾙﾎﾞｱｯｾﾝ	1	A,C,E
						INC.14,15
14	NO PART NO.	#	ELBOW	ｴﾙﾎﾞ	1	A,C,E
15	89140-00006		O-RING	Oﾘﾝｸﾞ	1	A,C,E
16	04710-04040		HOSE,LP	ﾎｰｽ	1	A,C,E:1014-
17	04710-04050		HOSE,LP	ﾎｰｽ	1	A,C,E:1014-
18	53675-55051		THREE-WAY	ｽﾘｰｳｴｲ	1	A,C,E:1014-
19	04911-00022		CLIP	ｸﾘｯﾌﾟ	4	A,C,E:1014-
20	57246-04101		NIPPLE	ﾆｯﾌﾟﾙ	1	A,C,E:1014-

FIG.130 HYDRAULIC LINE (MAIN)(4/4)(T-TYPE)

(F4047650) ﾊｲﾄﾞﾛﾘｯｸﾗｲﾝ(ﾒｲﾝ)(4/4)

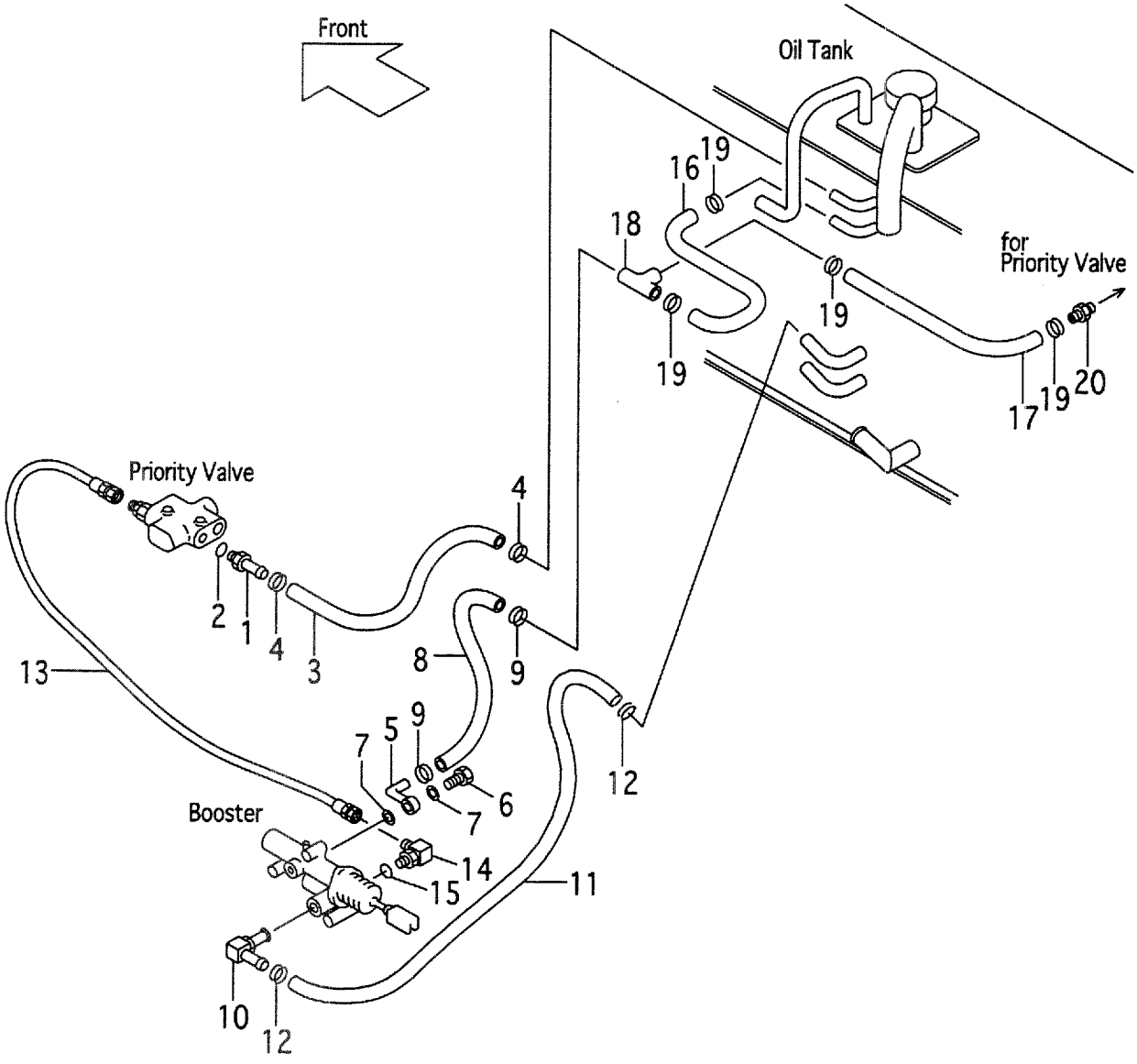

A:FD35C8 D:FD40T8 G:FD50T8 K:FG45T8
B:FD35T8 E:FD45C8 H:FG35T8 L:FG50T8
C:FD40C8 F:FD45T8 J:FG40T8

FIG.130
(F4047650)

Item No	Part No.	Mark	Description		Req'd	Remarks : Serial No.
A1	57246-04101		FITTING-ASSY	ﾌｨｯﾃｨﾝｸﾞｱｯｾﾝ	1	B,D,F,G,H,J,K,L INC.1,2
1	NO PART NO.	#	FITTING	ﾌｨｯﾃｨﾝｸﾞ	1	B,D,F,G,H,J,K,L
2	03320-00140		O-RING	Oﾘﾝｸﾞ	1	B,D,F,G,H,J,K,L
3	04710-04040		HOSE,LP	ﾎｰｽ	1	B,D,F,G,H,J,K,L
4	04911-00022		CLIP	ｸﾘｯﾌﾟ	2	B,D,F,G,H,J,K,L
5	522A2-12321		FITTING	ﾌｨｯﾃｨﾝｸﾞ	1	B,D,F,G,H,J,K,L
6	522A2-12301		BOLT,EYE	ﾎﾞﾙﾄ	1	B,D,F,G,H,J,K,L
7	214L7-62041		GASKET	ｶﾞｽｹｯﾄ	2	B,D,F,G,H,J,K,L
8	04710-04117		HOSE,LP	ﾎｰｽ	1	B,D,F:1-188 G:1-106 H,J,K,L:1-102
-	04710-04170		HOSE,LP	ﾎｰｽ	1	B,D,F:189-1013 G:107-242 H,J,K:103-214 L:103-108
-	04710-04130		HOSE,LP	ﾎｰｽ	1	B,D,F:1014- G:243- H,J,K:215- L:109-
9	04911-00022		CLIP	ｸﾘｯﾌﾟ	2	B,D,F,G,H,J,K,L
10	224X7-62001		ELBOW	ｴﾙﾎﾞ	1	B,D,F,G,H,J,K,L
11	04710-04150		HOSE,LP	ﾎｰｽ	1	B,D,F,G,H,J,K,L
12	04911-00021		CLIP	ｸﾘｯﾌﾟ	2	B,D,F,G,H,J,K,L
13	224W7-62231		HOSE,LP	ﾎｰｽ	1	B,D,F,G,H,J,K,L
A2	224X7-60361		ELBOW-ASSY	ｴﾙﾎﾞｱｯｾﾝ	1	B,D,F,G,H,J,K,L INC.14,15
14	NO PART NO.	#	ELBOW	ｴﾙﾎﾞ	1	B,D,F,G,H,J,K,L
15	89140-00006		O-RING	Oﾘﾝｸﾞ	1	B,D,F,G,H,J,K,L
16	04710-04040		HOSE,LP	ﾎｰｽ	1	B,D,F:1014- G:243- H,J,K:215- L:109-
17	04710-04050		HOSE,LP	ﾎｰｽ	1	B,D,F:1014- G:243- H,J,K:215- L:109-
18	53675-55051		THREE-WAY	ｽﾘｰｳｴｲ	1	B,D,F:1014- G:243- H,J,K:215- L:109-
19	04911-00022		CLIP	ｸﾘｯﾌﾟ	4	B,D,F:1014- G:243- H,J,K:215- L:109-
20	57246-04101		NIPPLE	ﾆｯﾌﾟﾙ	1	B,D,F:1014- G:243- H,J,K:215- L:109-

FIG.131 HYDRAULIC LINE (CLUTCH LINE)(C-TYPE)

(F4047660) ﾊｲﾄﾞﾛﾘｯｸﾗｲﾝ(ｸﾗｯﾁﾗｲﾝ)

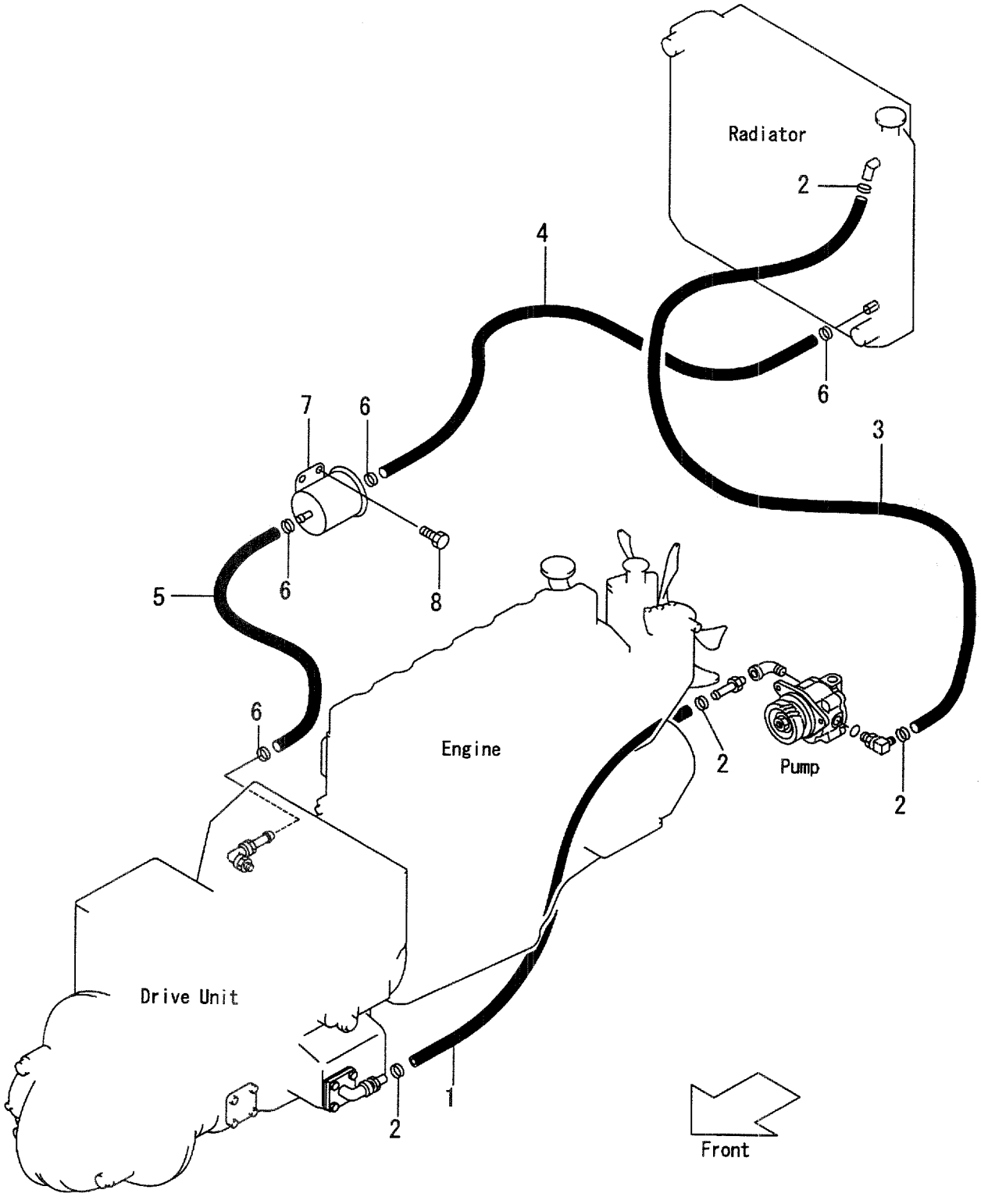

A:FD35C8 D:FD40T8 G:FD50T8 K:FG45T8
B:FD35T8 E:FD45C8 H:FG35T8 L:FG50T8
C:FD40C8 F:FD45T8 J:FG40T8

FIG.131
(F4047660)

Item No	Part No.	Mark	Description		Req'd	Remarks : Serial No.
1	23967-82011		HOSE,LP	ﾎｰｽ	1	A,C,E:1-107
-	25967-82111		HOSE,LP	ﾎｰｽ	1	A,C,E:108-
2	04911-00030		CLIP	ｸﾘｯﾌﾟ	4	A,C,E
3	25307-82261		HOSE,LP	ﾎｰｽ	1	A,C,E
4	22657-82221		HOSE,LP	ﾎｰｽ	1	A,C,E:1-107
-	235C7-82101		HOSE,LP	ﾎｰｽ	1	A,C,E:108-
5	24607-82141		HOSE,LP	ﾎｰｽ	1	A,C,E:1-107
-	24617-82021		HOSE,LP	ﾎｰｽ	1	A,C,E:108-222
-	235C7-82121		HOSE,LP	ﾎｰｽ	1	A,C,E:223-
6	04911-00030		CLIP	ｸﾘｯﾌﾟ	4	A,C,E
7	25787-80301		FILTER,LINE	ﾌｨﾙﾀ	1	A,C,E
8	01185-08012		BOLT	ﾎﾞﾙﾄ	2	A,C,E

FIG.132 HYDRAULIC LINE (TOR-CON LINE)(T-TYPE)

(F4047670) ﾊｲﾄﾞﾛﾘｯｸﾗｲﾝ(ﾄﾙｺﾝﾗｲﾝ)

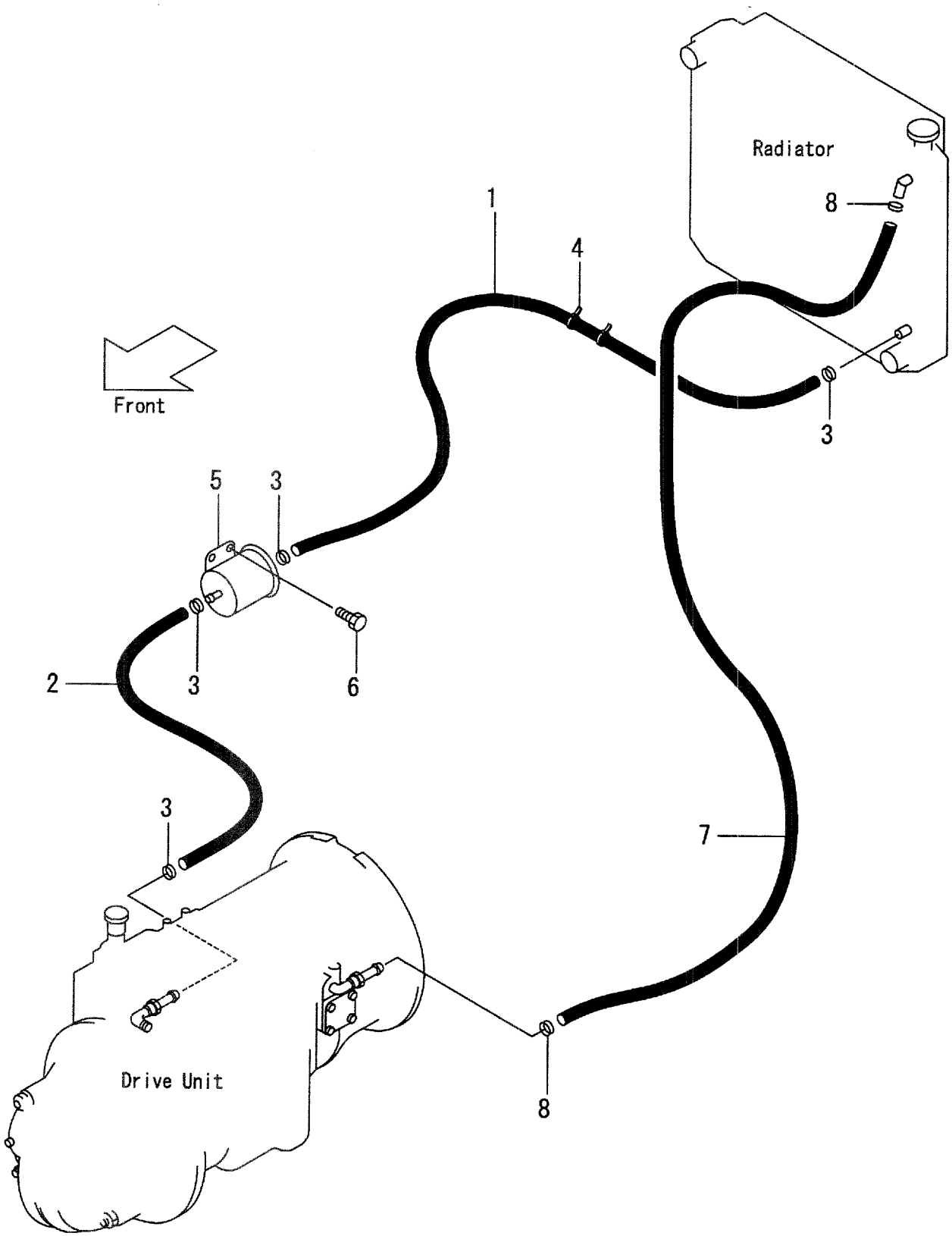

A:FD35C8 D:FD40T8 G:FD50T8 K:FG45T8
B:FD35T8 E:FD45C8 H:FG35T8 L:FG50T8
C:FD40C8 F:FD45T8 J:FG40T8

FIG.132
(F4047670)

Item No	Part No.	Mark	Description		Req'd	Remarks : Serial No.
1	22657-82221		HOSE,LP	ﾎｰｽ	1	B,D,F:1-107 G:1-101 H,J,K,L:1-102
-	235C7-82101		HOSE,LP	ﾎｰｽ	1	B,D,F:108- G:102- H,J,K,L:103-
2	25787-82011		HOSE,LP	ﾎｰｽ	1	B,D,F,G,H,J,K,L
3	04911-00030		CLIP	ｸﾘｯﾌﾟ	4	B,D,F,G,H,J,K,L
4	27042-42312		BAND	ﾊﾞﾝﾄﾞ	2	B,D,F,G,H,J,K,L
5	25787-80301		FILTER,LINE	ﾌｨﾙﾀ	1	B,D,F,G,H,J,K,L
6	01185-08012		BOLT	ﾎﾞﾙﾄ	2	B,D,F,G,H,J,K,L
7	23967-82011		HOSE,LP	ﾎｰｽ	1	B,D,F,G,H,J,K,L
8	04911-00030		CLIP	ｸﾘｯﾌﾟ	2	B,D,F,G,H,J,K,L

FIG.133 HYDRAULIC PUMP (C-TYPE)

(F4047690) ﾊｲﾄﾞﾛﾘｯｸﾎﾟﾝﾌﾟ

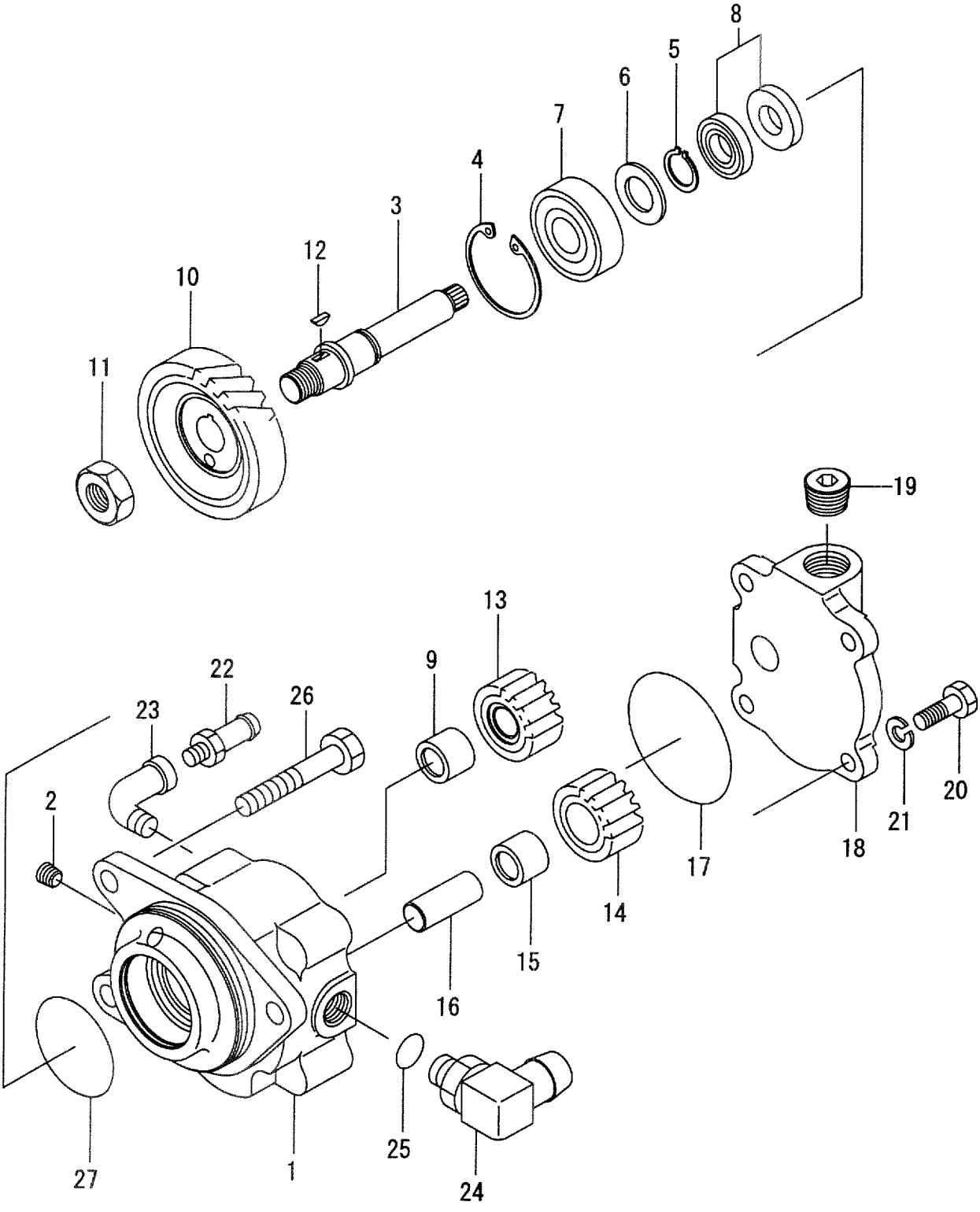

A:FD35C8 D:FD40T8 G:FD50T8 K:FG45T8
B:FD35T8 E:FD45C8 H:FG35T8 L:FG50T8
C:FD40C8 F:FD45T8 J:FG40T8

FIG.133
(F4047690)

Item No	Part No.	Mark	Description		Req'd	Remarks : Serial No.
A1	224W7-80101		PUMP-ASSY,HYDRAULIC	ﾎﾟﾝﾌﾟｱｯｾﾝ	1	A,C,E
						INC.1-21
1	NO PART NO.	#	BODY	ﾎﾞﾃﾞｨ	1	A,C,E
2	23870-52871		PLUG	ﾌﾟﾗｸﾞ	1	A,C,E
3	224W7-82011		SHAFT,INPUT	ｼｬﾌﾄ	1	A,C,E
4	02110-00047		RING,SNAP	ｽﾅｯﾌﾟﾘﾝｸﾞ	1	A,C,E
5	02100-00017		RING,SNAP	ｽﾅｯﾌﾟﾘﾝｸﾞ	1	A,C,E
6	02000-00016		WASHER	ﾜｯｼｬ	1	A,C,E
7	03000-06303		BEARING	ﾍﾞｱﾘﾝｸﾞ	1	A,C,E
8	224W7-82021		SEAL,OIL	ｼｰﾙ	2	A,C,E
9	224W7-82031		BEARING	ﾍﾞｱﾘﾝｸﾞ	1	A,C,E
10	224W7-82041		GEAR,INPUT	ｷﾞﾔｰ	1	A,C,E
11	01400-10014		NUT	ﾅｯﾄ	1	A,C,E
12	02360-04013		KEY	ｷｰ	1	A,C,E
13	224W7-82051		GEAR,A	ｷﾞﾔｰ	1	A,C,E
14	224W7-82061		GEAR,B	ｷﾞﾔｰ	1	A,C,E
15	224W7-82031		BEARING	ﾍﾞｱﾘﾝｸﾞ	1	A,C,E
16	224W7-82071		PIN	ﾋﾟﾝ	1	A,C,E
17	15583-82531		O-RING	Oﾘﾝｸﾞ	1	A,C,E
18	NO PART NO.	#	COVER	ｶﾊﾞｰ	1	A,C,E
19	12163-82541		PLUG	ﾌﾟﾗｸﾞ	1	A,C,E
20	01103-08025		BOLT	ﾎﾞﾙﾄ	4	A,C,E
21	02010-00008		WASHER	ﾜｯｼｬ	4	A,C,E
22	25277-82012		FITTING	ﾌｨｯﾃｨﾝｸﾞ	1	A,C,E
23	04012-00404		ELBOW	ｴﾙﾎﾞ	1	A,C,E
A2	235C7-80201		ELBOW-ASSY	ｴﾙﾎﾞｱｯｾﾝ	1	A,C,E
						INC.24,25
-	04150-20303		ELBOW-ASSY	ｴﾙﾎﾞｱｯｾﾝ	1	A,C,E
						[CRO] INC.24,25
24	NO PART NO.	#	ELBOW	ｴﾙﾎﾞ	1	A,C,E
-	NO PART NO.	#	ELBOW	ｴﾙﾎﾞ	1	A,C,E
						[CRO]
25	03320-00140		O-RING	Oﾘﾝｸﾞ	1	A,C,E
26	01221-10060		BOLT	ﾎﾞﾙﾄ	3	A,C,E
27	224W7-82131		O-RING	Oﾘﾝｸﾞ	1	A,C,E

FIG.134 OIL COOLER [CRH][CRO][CRC]

(F40476A0) オイルクーラ

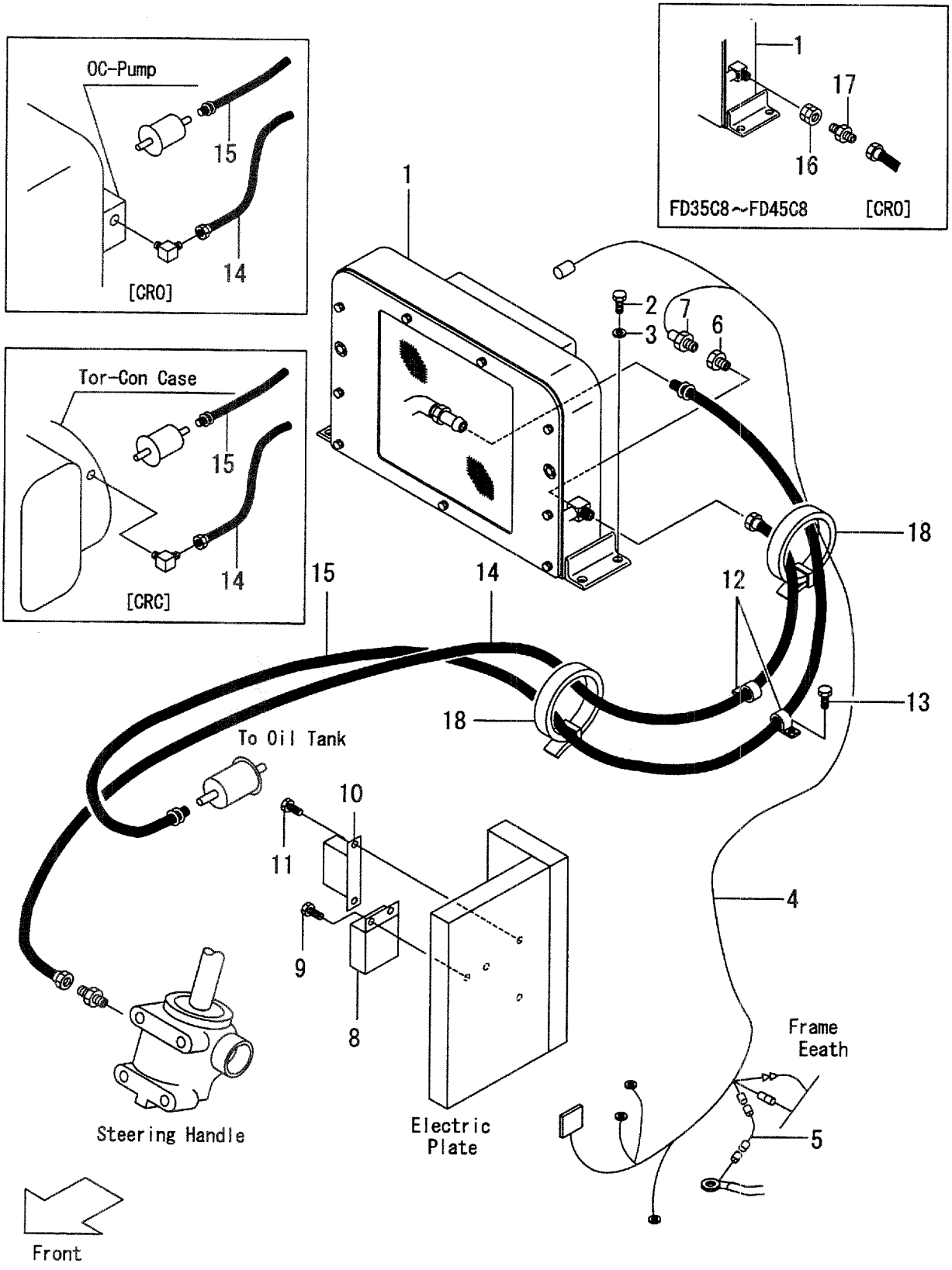

A:FD35C8 D:FD40T8 G:FD50T8 K:FG45T8
B:FD35T8 E:FD45C8 H:FG35T8 L:FG50T8
C:FD40C8 F:FD45T8 J:FG40T8

FIG.134
(F40476A0)

Item No	Part No.	Mark	Description		Req'd	Remarks : Serial No.
1	524W4-10101		COOLER,OIL	ｸｰﾗ	1	A,B,C,D,E,F,G [CRH][CRO][CRC]SEE FIG.135
2	01186-12040		BOLT	ﾎﾞﾙﾄ	4	A,B,C,D,E,F,G [CRH][CRO][CRC]
3	02000-00016		WASHER	ﾜｯｼｬ	4	A,B,C,D,E,F,G [CRH][CRO][CRC]
4	535C4-12111		WIRE-HARNESS	ﾜｲﾔﾊｰﾈｽ	1	A,B,C,D,E,F,G [CRH][CRO][CRC]
5	24602-42111		WIRE	ﾜｲﾔ	1	A,B,C,D,E,F,G [CRH][CRO][CRC]
6	21162-42011		PLUG	ﾌﾟﾗｸﾞ	1	A,B,C,D,E,F,G [CRH][CRO][CRC]
7	524W4-12121		SWITCH,THERMO	ｽｲｯﾁ	1	A,B,C,D,E,F,G [CRH][CRO][CRC]
8	55807-62381		BREAKER,CRCUIT	ﾌﾞﾚｰｶ	1	A,B,C,D,E,F,G [CRH][CRO][CRC]
9	01183-04010		BOLT	ﾎﾞﾙﾄ	2	A,B,C,D,E,F,G [CRH][CRO][CRC]
10	55807-62241		RELAY	ﾘﾚｰ	1	A,B,C,D,E,F,G [CRH][CRO][CRC]
11	01183-06010		BOLT	ﾎﾞﾙﾄ	2	A,B,C,D,E,F,G [CRH][CRO][CRC]
12	224X7-62051		CLAMP	ｸﾗﾝﾌﾟ	2	A,B,C,D,E,F,G [CRH][CRO][CRC]
13	01185-08020		BOLT	ﾎﾞﾙﾄ	2	A,B,C,D,E,F,G [CRH][CRO][CRC]
14	04671-04415		HOSE,HP	ﾎｰｽ	1	A,B,C,D,E,F [CRH]
-	04671-04430		HOSE,HP	ﾎｰｽ	1	A,B,C,D,E,F [EX/CRH][OBT]
-	04671-04445		HOSE,HP	ﾎｰｽ	1	G [CRH]
-	04671-04460		HOSE,HP	ﾎｰｽ	1	G [EX/CRH][OBT]
-	04671-03150		HOSE,HP	ﾎｰｽ	1	A,C,E [CRO]
-	04671-04220		HOSE,HP	ﾎｰｽ	1	B,D,F [CRC]
-	04671-04250		HOSE,HP	ﾎｰｽ	1	G [CRC]
15	04710-06410		HOSE	ﾎｰｽ	1	A,B,C,D,E,F [CRH]
-	04710-06440		HOSE	ﾎｰｽ	1	G [CRH]
-	535C4-12101		HOSE	ﾎｰｽ	1	A,B,C,D,E,F,G [CRO][CRC]
16	04139-00404		UNION	ﾕﾆｵﾝ	1	A,C,E [CRO]
17	52319-29071		NIPPLE	ﾆｯﾌﾟﾙ	1	A,C,E [CRO]

FIG.134 OIL COOLER [CRH][CRO][CRC]

(F40476A0) オイルクーラ

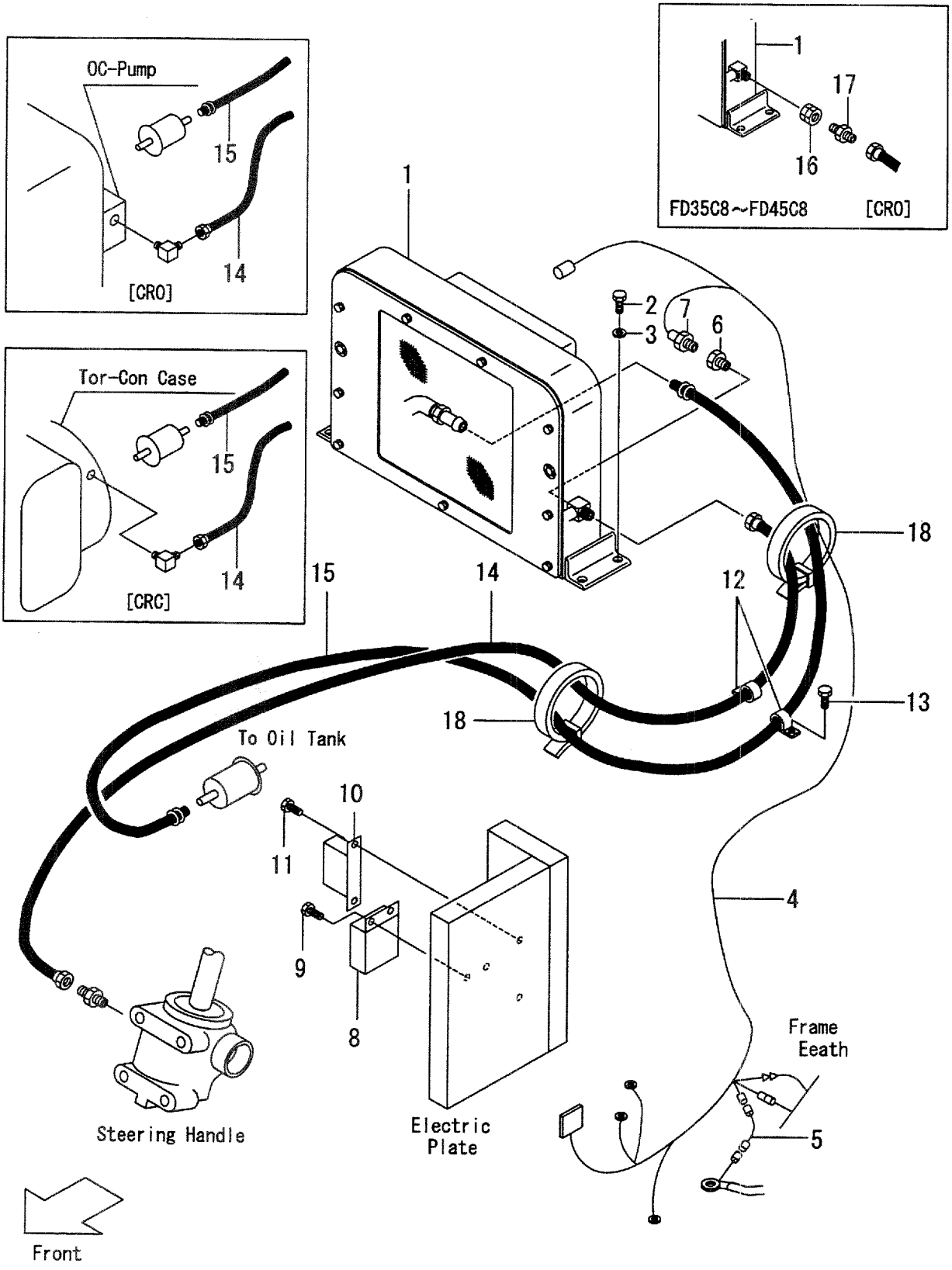

A:FD35C8 D:FD40T8 G:FD50T8 K:FG45T8
B:FD35T8 E:FD45C8 H:FG35T8 L:FG50T8
C:FD40C8 F:FD45T8 J:FG40T8

FIG.134
(F40476A0)

Item No	Part No.	Mark	Description	Req'd	Remarks : Serial No.
18	27042-42312		BAND ﾊﾞﾝﾄﾞ	2	A,B,C,D,E,F,G [CRH][CRO][CRC]
19	04911-00030	+	CLIP ｸﾘｯﾌﾟ	2	A,C,E [CRO]

FIG.135 OIL COOLER-INNER PARTS [CRH][CRO][CRC]

(F40476B0) オイルクーラ-インナパーツ

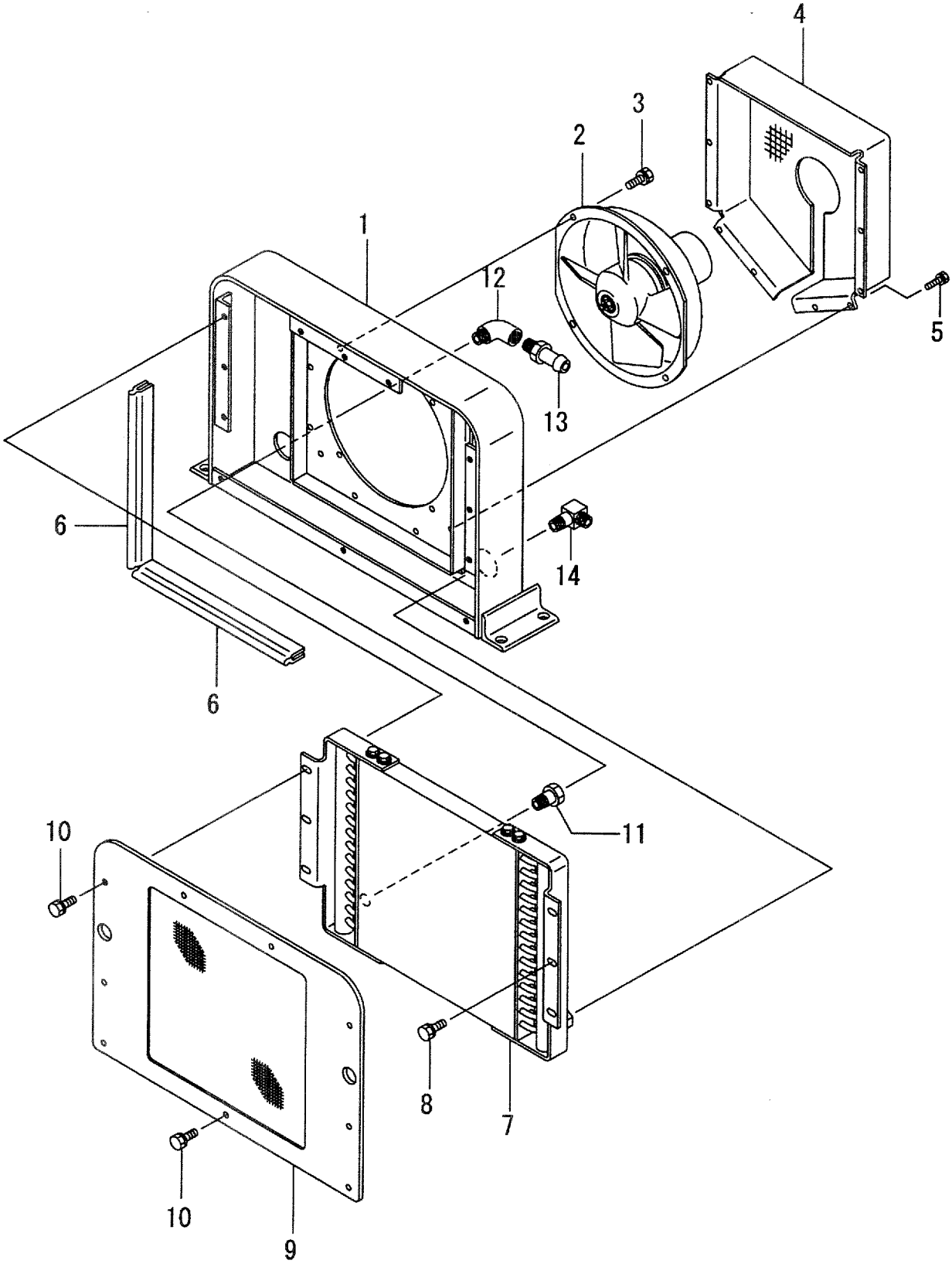

A:FD35C8 D:FD40T8 G:FD50T8 K:FG45T8
B:FD35T8 E:FD45C8 H:FG35T8 L:FG50T8
C:FD40C8 F:FD45T8 J:FG40T8

FIG.135
(F40476B0)

Item No	Part No.	Mark	Description		Req'd	Remarks : Serial No.
A1	524W4-10101		COOLER-ASSY,OIL	ｵｲﾙｸｰﾗｱｯｾﾝ	1	A,B,C,D,E,F,G [CRH][CRO][CRC] INC.1-14
1	524W4-10201		CASE	ｹｰｽ	1	A,B,C,D,E,F,G [CRH][CRO][CRC]
2	524W4-10301		FAN	ﾌｧﾝ	1	A,B,C,D,E,F,G [CRH][CRO][CRC]
3	01185-06012		BOLT	ﾎﾞﾙﾄ	4	A,B,C,D,E,F,G [CRH][CRO][CRC]
4	524W4-12092		GUARD	ｶﾞｰﾄﾞ	1	A,B,C,D,E,F,G [CRH][CRO][CRC]
5	01185-08016		BOLT	ﾎﾞﾙﾄ	6	A,B,C,D,E,F,G [CRH][CRO][CRC]
6	524W4-12151		SEAL	ｼｰﾙ	4	A,B,C,D,E,F,G [CRH][CRO][CRC]
7	524W4-10401		COOLER,OIL	ｸｰﾗ	1	A,B,C,D,E,F,G [CRH][CRO][CRC]
8	01185-08016		BOLT	ﾎﾞﾙﾄ	2	A,B,C,D,E,F,G [CRH][CRO][CRC]
9	524W4-12081		SCREEN,DUST	ｽｸﾘｰﾝ	1	A,B,C,D,E,F,G [CRH][CRO][CRC]
10	01185-08016		BOLT	ﾎﾞﾙﾄ	9	A,B,C,D,E,F,G [CRH][CRO][CRC]
11	22117-60161		NIPPLE	ﾆｯﾌﾟﾙ	1	A,B,C,D,E,F,G [CRH][CRO][CRC]
12	04012-00404		ELBOW	ｴﾙﾎﾞ	1	A,B,C,D,E,F,G [CRH][CRO][CRC]
13	25277-82012		NIPPLE	ﾆｯﾌﾟﾙ	1	A,B,C,D,E,F,G [CRH][CRO][CRC]
14	524W4-12141		THREE-WAY	ｽﾘｰｳｴｲ	1	A,B,C,D,E,F,G [CRH][CRO][CRC]

FIG.136 TILT CYLINDER

(F4048510) ﾃｨﾙﾄｼﾘﾝﾀﾞ

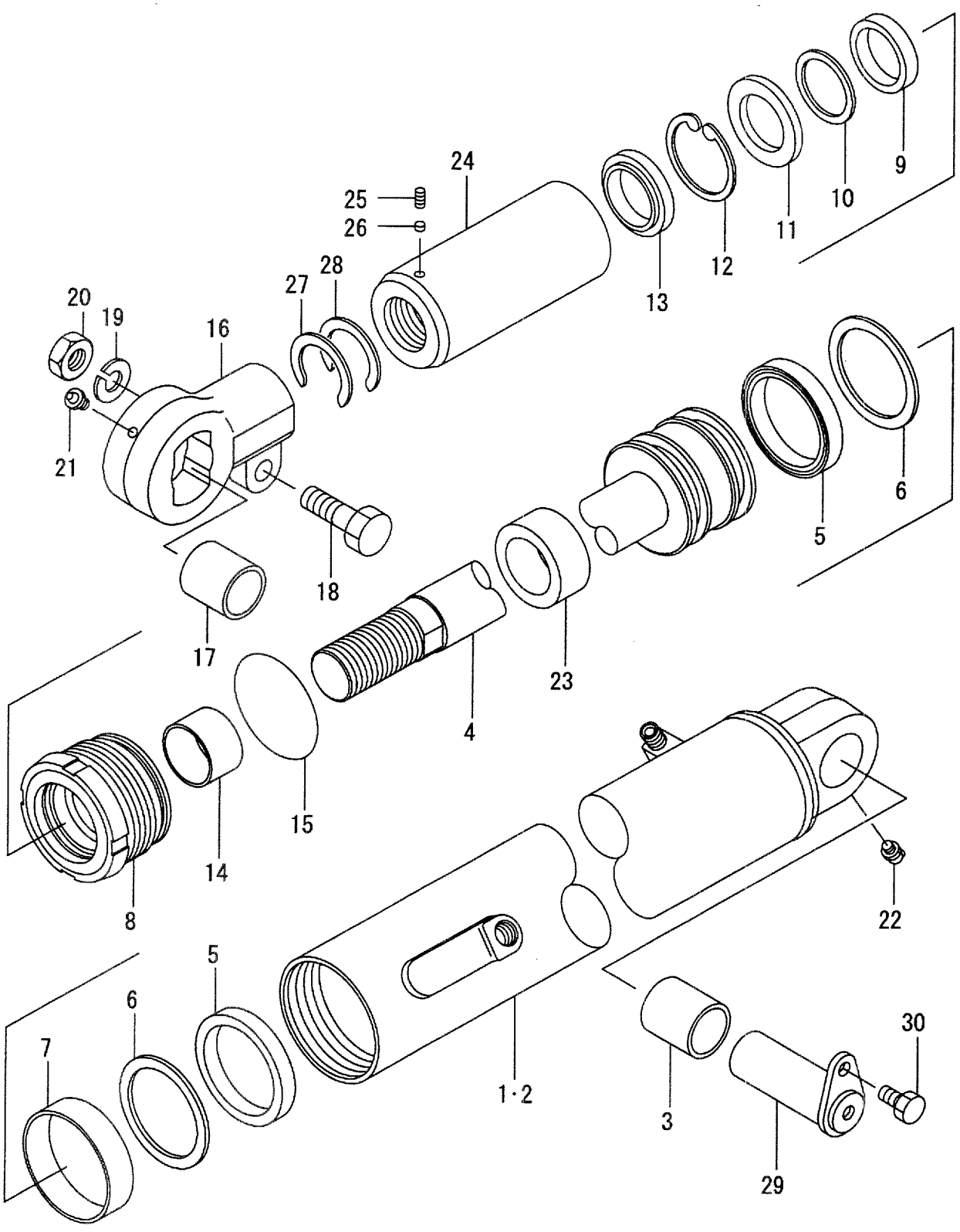

A:FD35C8:1-266 D:FD40T8:1-266 G:FD50T8:1-135 K:FG45T8:1-107
B:FD35T8:1-266 E:FD45C8:1-266 H:FG35T8:1-107 L:FG50T8:1-102
C:FD40C8:1-266 F:FD45T8:1-266 J:FG40T8:1-107

FIG.136
(F4048510)

Item No	Part No.	Mark	Description		Req'd	Remarks : Serial No.
A1	224T8-50001		CYL-ASSY,TILT,RH	ﾃｨﾙﾄｼﾘﾝﾀﾞｱｯｾﾝ	1	(6-12 DEG.) INC.1-22
-	224T8-50081		CYL-ASSY,TILT,RH	ﾃｨﾙﾄｼﾘﾝﾀﾞｱｯｾﾝ	1	[TIL013](3-3 DEG.) INC.1-28
-	224T8-50041		CYL-ASSY,TILT,RH	ﾃｨﾙﾄｼﾘﾝﾀﾞｱｯｾﾝ	1	[TIL014](3-6 DEG.) INC.1-28
-	224T8-50021		CYL-ASSY,TILT,RH	ﾃｨﾙﾄｼﾘﾝﾀﾞｱｯｾﾝ	1	[TIL016](6-6 DEG.) INC.1-22,24-28
-	224T8-50061		CYL-ASSY,TILT,RH	ﾃｨﾙﾄｼﾘﾝﾀﾞｱｯｾﾝ	1	[TIL017](6-10 DEG.) INC.1-22,24-28
A2	224T8-50011		CYL-ASSY,TILT,LH	ﾃｨﾙﾄｼﾘﾝﾀﾞｱｯｾﾝ	1	(6-12 DEG.) INC.1-22
-	224T8-50091		CYL-ASSY,TILT,LH	ﾃｨﾙﾄｼﾘﾝﾀﾞｱｯｾﾝ	1	[TIL013](3-3 DEG.) INC.1-28
-	224T8-50051		CYL-ASSY,TILT,LH	ﾃｨﾙﾄｼﾘﾝﾀﾞｱｯｾﾝ	1	[TIL014](3-6 DEG.) INC.1-28
-	224T8-50031		CYL-ASSY,TILT,LH	ﾃｨﾙﾄｼﾘﾝﾀﾞｱｯｾﾝ	1	[TIL016](6-6 DEG.) INC.1-22,24-28
-	224T8-50071		CYL-ASSY,TILT,LH	ﾃｨﾙﾄｼﾘﾝﾀﾞｱｯｾﾝ	1	[TIL017](6-10 DEG.) INC.1-22,24-28
A3	224T8-50102		TUBE-ASSY,RH	ﾁｭｰﾌﾞｱｯｾﾝ	1	INC.1,3
-	224T8-50112		TUBE-ASSY,LH	ﾁｭｰﾌﾞｱｯｾﾝ	1	INC.2,3
1	NO PART NO.	#	TUBE,RH	ﾁｭｰﾌﾞ	1	
2	NO PART NO.	#	TUBE,LH	ﾁｭｰﾌﾞ	1	
3	224T8-52551		BUSHING	ﾌﾞｯｼﾝｸﾞ	2	
4	224T8-50301		ROD,PISTON	ﾛｯﾄﾞ	2	
S1	25808-49811		SET,PACKING	ﾊﾟｯｷﾝｸﾞｾｯﾄ	4	INC.5,6
5	NO PART NO.	##	PACKING	ﾊﾟｯｷﾝｸﾞ	4	
6	25808-43121	*	RING,BACK-UP	ﾘﾝｸﾞ	4	
7	224T8-52221	*	WEARING	ｳｴｱﾘﾝｸﾞ	2	
8	224T8-52112		CAP	ｷｬｯﾌﾟ	2	INC.14
9	224T8-52131	*	PACKING	ﾊﾟｯｷﾝｸﾞ	2	
10	224T8-52141	*	RING,BACK-UP	ﾘﾝｸﾞ	2	
11	224T8-52151		RETAINER	ﾘﾃｰﾅ	2	
12	02110-00068	*	RING,SNAP	ｽﾅｯﾌﾟﾘﾝｸﾞ	2	
13	224T8-52121	*	SEAL,DUST	ｼｰﾙ	2	
14	224T8-52161		BUSHING	ﾌﾞｯｼﾝｸﾞ	2	
15	03350-00850	*	O-RING	Oﾘﾝｸﾞ	2	
A4	224T8-50501		END-ASSY,ROD	ｴﾝﾄﾞｱｯｾﾝ	2	INC.16,17
16	NO PART NO.	#	END,ROD	ｴﾝﾄﾞ	2	
17	224T8-52421		BUSHING	ﾌﾞｯｼﾝｸﾞ	2	
18	01103-16055		BOLT	ﾎﾞﾙﾄ	2	
19	02011-00016		WASHER	ﾜｯｼｬ	2	
20	01400-10016		NUT	ﾅｯﾄ	2	
21	214A8-52051		FITTING	ﾌｨｯﾃｨﾝｸﾞ	2	
22	04901-00191		FITTING	ﾌｨｯﾃｨﾝｸﾞ	2	
23	224T8-52231		SPACER	ｽﾍﾟｰｻ	2	[TIL013][TIL014]
24	224T8-52331		SPACER	ｽﾍﾟｰｻ	2	[TIL013]
-	224T8-52311		SPACER	ｽﾍﾟｰｻ	2	[TIL014][TIL016]
-	224T8-52321		SPACER	ｽﾍﾟｰｻ	2	[TIL017]
25	01066-10012		SCREW	ｽｸﾘｭ	2	[TIL013][TIL014][TIL016] [TIL017]
26	23658-52401		PLUG,NYLON	ﾌﾟﾗｸﾞ	2	[TIL013][TIL014][TIL016] [TIL017]

FIG.136 TILT CYLINDER

(F4048510) ﾃｨﾙﾄｼﾘﾝﾀﾞ

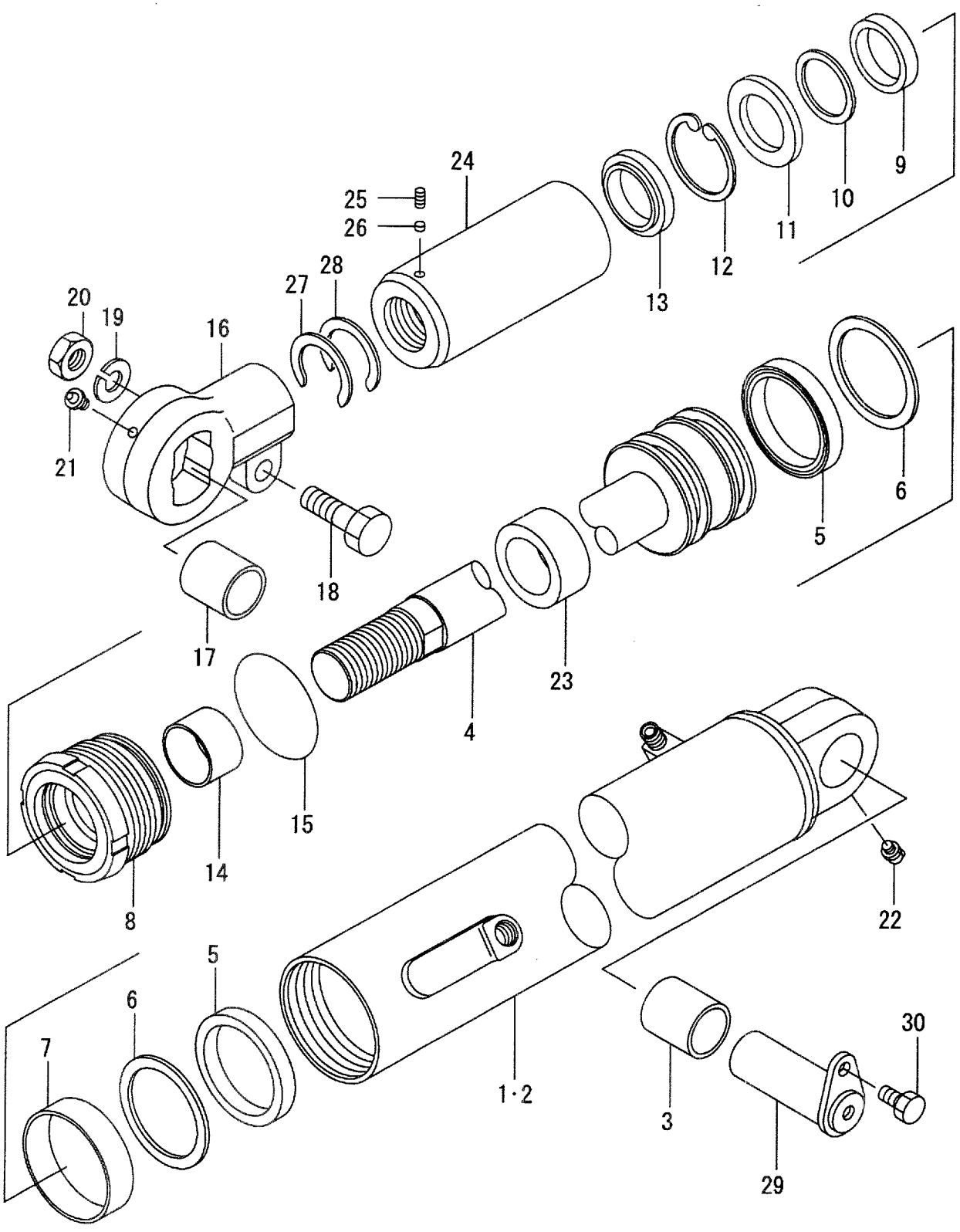

A:FD35C8:1-266 D:FD40T8:1-266 G:FD50T8:1-135 K:FG45T8:1-107
B:FD35T8:1-266 E:FD45C8:1-266 H:FG35T8:1-107 L:FG50T8:1-102
C:FD40C8:1-266 F:FD45T8:1-266 J:FG40T8:1-107

FIG.136
(F4048510)

Item No	Part No.	Mark	Description		Req'd	Remarks : Serial No.
27	224T8-52301		SHIM,T-0.5	シム	AR	[TIL013][TIL014][TIL016] [TIL017]
28	224T8-52291		SHIM,T-1.0	シム	AR	[TIL013][TIL014][TIL016] [TIL017]
29	235C8-52001		PIN	ピン	2	
30	01184-10020		BOLT	ボルト	2	
K1	224T8-59801		KIT,OVERHAUL	オーバーホールキット	2	INC.5-7,9,10,12,13,15

FIG.136A TILT CYLINDER

(F4048511) ﾃｨﾙﾄｼﾘﾝﾀﾞ

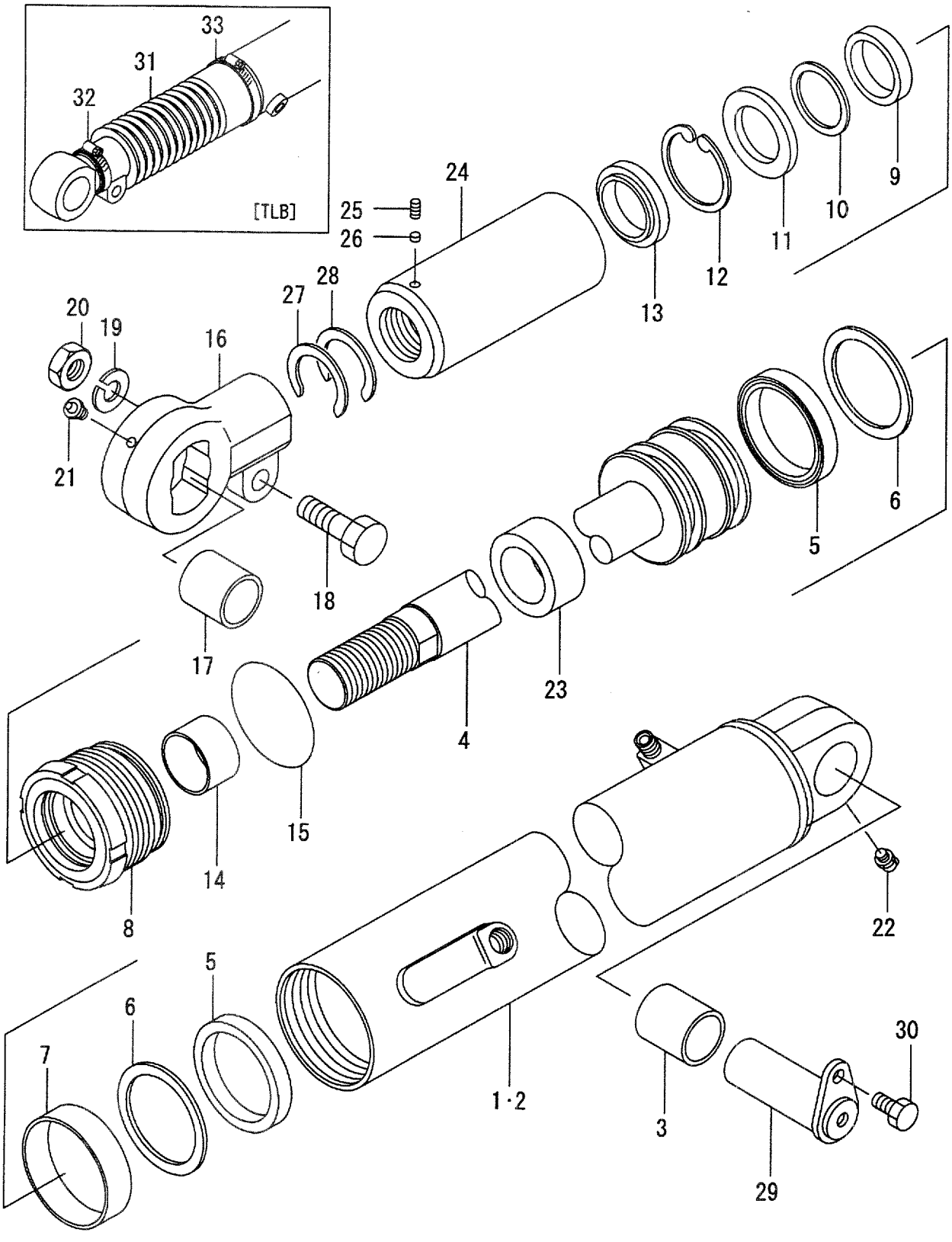

A:FD35C8:267- D:FD40T8:267- G:FD50T8:136- K:FG45T8:108-
B:FD35T8:267- E:FD45C8:267- H:FG35T8:108- L:FG50T8:103-
C:FD40C8:267- F:FD45T8:267- J:FG40T8:108-

FIG.136A
(F4048511)

Item No	Part No.	Mark	Description		Req'd	Remarks : Serial No.
A1	235C8-50001		CYL-ASSY,TILT,RH	ﾃｨﾙﾄｼﾘﾝﾀﾞｱｯｾﾝ	1	(6-12 DEG.) INC.1-22
-	235C8-50081		CYL-ASSY,TILT,RH	ﾃｨﾙﾄｼﾘﾝﾀﾞｱｯｾﾝ	1	[TIL013](3-3 DEG.) INC.1-28
-	235C8-50041		CYL-ASSY,TILT,RH	ﾃｨﾙﾄｼﾘﾝﾀﾞｱｯｾﾝ	1	[TIL014](3-6 DEG.) INC.1-28
-	235C8-50021		CYL-ASSY,TILT,RH	ﾃｨﾙﾄｼﾘﾝﾀﾞｱｯｾﾝ	1	[TIL016](6-6 DEG.) INC.1-22,24-28
-	235C8-50061		CYL-ASSY,TILT,RH	ﾃｨﾙﾄｼﾘﾝﾀﾞｱｯｾﾝ	1	[TIL017](6-10 DEG.) INC.1-22,24-28
A2	235C8-50011		CYL-ASSY,TILT,LH	ﾃｨﾙﾄｼﾘﾝﾀﾞｱｯｾﾝ	1	(6-12 DEG.) INC.1-22
-	235C8-50091		CYL-ASSY,TILT,LH	ﾃｨﾙﾄｼﾘﾝﾀﾞｱｯｾﾝ	1	[TIL013](3-3 DEG.) INC.1-28
-	235C8-50051		CYL-ASSY,TILT,LH	ﾃｨﾙﾄｼﾘﾝﾀﾞｱｯｾﾝ	1	[TIL014](3-6 DEG.) INC.1-28
-	235C8-50031		CYL-ASSY,TILT,LH	ﾃｨﾙﾄｼﾘﾝﾀﾞｱｯｾﾝ	1	[TIL016](6-6 DEG.) INC.1-22,24-28
-	235C8-50071		CYL-ASSY,TILT,LH	ﾃｨﾙﾄｼﾘﾝﾀﾞｱｯｾﾝ	1	[TIL017](6-10 DEG.) INC.1-22,24-28
A3	235C8-50101		TUBE-ASSY,RH	ﾁｭｰﾌﾞｱｯｾﾝ	1	INC.1,3
-	235C8-50111		TUBE-ASSY,LH	ﾁｭｰﾌﾞｱｯｾﾝ	1	INC.2,3
1	NO PART NO.	#	TUBE,RH	ﾁｭｰﾌﾞ	1	
2	NO PART NO.	#	TUBE,LH	ﾁｭｰﾌﾞ	1	
3	224T8-52551		BUSHING	ﾌﾞｯｼﾝｸﾞ	2	
4	224T8-50301		ROD,PISTON	ﾛｯﾄﾞ	2	
S1	25808-49811		SET,PACKING	ﾊﾟｯｷﾝｸﾞｾｯﾄ	4	INC.5,6
5	NO PART NO.	#*	PACKING	ﾊﾟｯｷﾝｸﾞ	4	
6	25808-43121	*	RING,BACK-UP	ﾘﾝｸﾞ	4	
7	224T8-52221	*	WEARING	ｳｴｱﾘﾝｸﾞ	2	
8	224T8-52112		CAP	ｷｬｯﾌﾟ	2	INC.14
9	224T8-52131	*	PACKING	ﾊﾟｯｷﾝｸﾞ	2	
10	224T8-52141	*	RING,BACK-UP	ﾘﾝｸﾞ	2	
11	224T8-52151		RETAINER	ﾘﾃｰﾅ	2	
12	02110-00068	*	RING,SNAP	ｽﾅｯﾌﾟﾘﾝｸﾞ	2	
13	224T8-52121	*	SEAL,DUST	ｼｰﾙ	2	
14	224T8-52161		BUSHING	ﾌﾞｯｼﾝｸﾞ	2	
15	03350-00850	*	O-RING	Oﾘﾝｸﾞ	2	
A4	224T8-50501		END-ASSY,ROD	ｴﾝﾄﾞｱｯｾﾝ	2	INC.16,17
16	NO PART NO.	#	END,ROD	ｴﾝﾄﾞ	2	
17	224T8-52421		BUSHING	ﾌﾞｯｼﾝｸﾞ	2	
18	01103-16055		BOLT	ﾎﾞﾙﾄ	2	
19	02011-00016		WASHER	ﾜｯｼｬ	2	
20	01400-10016		NUT	ﾅｯﾄ	2	
21	214A8-52051		FITTING	ﾌｨｯﾃｨﾝｸﾞ	2	
22	04901-00191		FITTING	ﾌｨｯﾃｨﾝｸﾞ	2	
23	224T8-52231		SPACER	ｽﾍﾟｰｻ	2	[TIL013][TIL014]
24	224T8-52331		SPACER	ｽﾍﾟｰｻ	2	[TIL013]
-	224T8-52311		SPACER	ｽﾍﾟｰｻ	2	[TIL014][TIL016]
-	224T8-52321		SPACER	ｽﾍﾟｰｻ	2	[TIL017]
25	01066-10012		SCREW	ｽｸﾘｭ	2	[TIL013][TIL014][TIL016] [TIL017]
26	23658-52401		PLUG,NYLON	ﾌﾟﾗｸﾞ	2	[TIL013][TIL014][TIL016] [TIL017]

FIG.136A TILT CYLINDER

(F4048511) ﾃｨﾙﾄｼﾘﾝﾀﾞ

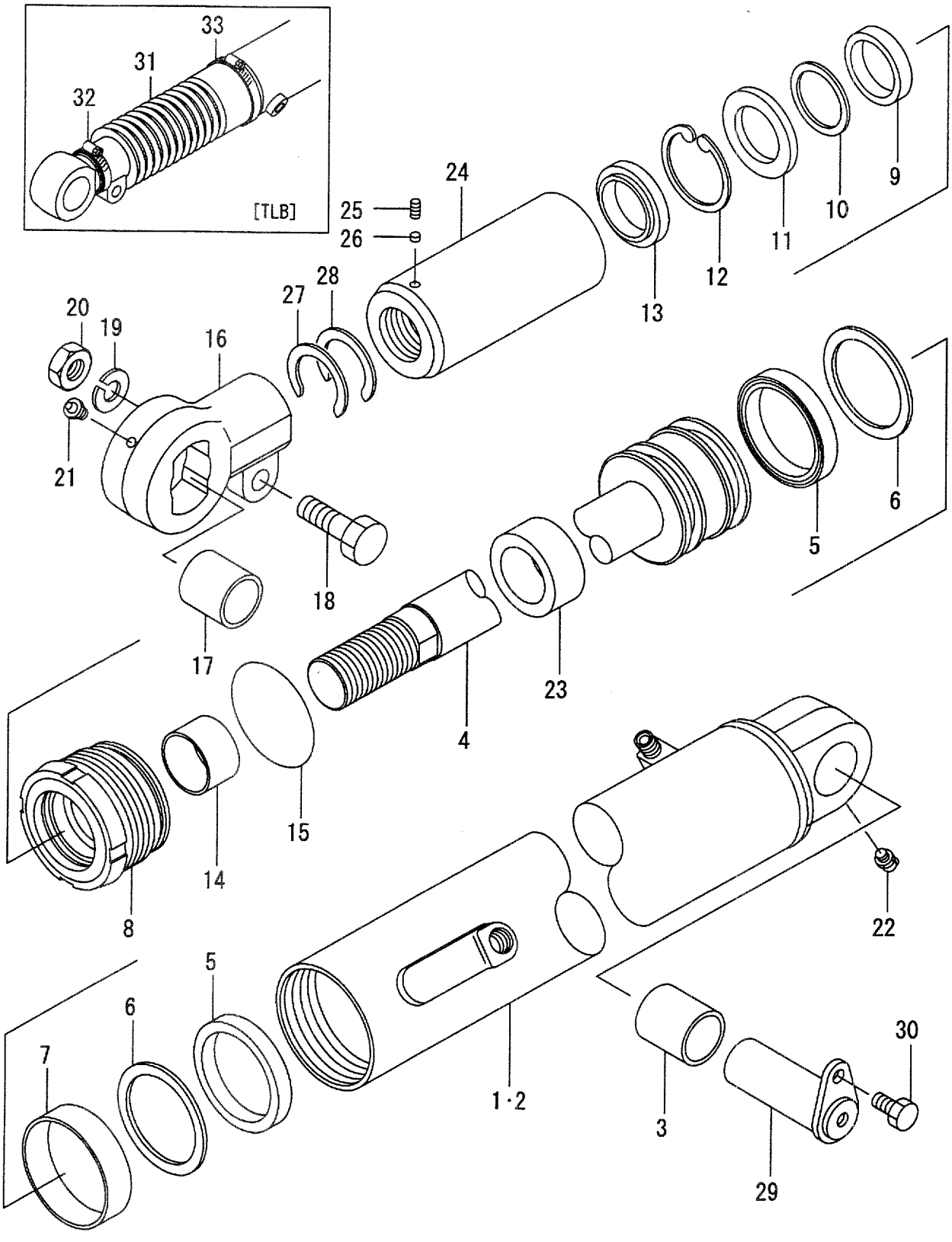

A:FD35C8:267- D:FD40T8:267- G:FD50T8:136- K:FG45T8:108-
B:FD35T8:267- E:FD45C8:267- H:FG35T8:108- L:FG50T8:103-
C:FD40C8:267- F:FD45T8:267- J:FG40T8:108-

FIG.136A
(F4048511)

Item No	Part No.	Mark	Description		Req'd	Remarks : Serial No.
27	224T8-52301		SHIM,T-0.5	ｼﾑ	AR	[TIL013][TIL014][TIL016] [TIL017]
28	224T8-52291		SHIM,T-1.0	ｼﾑ	AR	[TIL013][TIL014][TIL016] [TIL017]
29	235C8-52001		PIN	ﾋﾟﾝ	2	
30	01184-10020		BOLT	ﾎﾞﾙﾄ	2	
A5	224T8-51001		BOOT-ASSY	ﾌﾞｰﾂｱｯｾﾝ	2	A,B,C,D,E,F:1323- G:283- H,J,K:254- L [TLB](6-12 DEG.) INC.31-33
-	224T8-51011		BOOT-ASSY	ﾌﾞｰﾂｱｯｾﾝ	2	A,B,C,D,E,F:1323- G:283- H,J,K:254- L [TLB] (6-6,3-6,6-10,3-3 DEG.) INC.31-33
31	224T8-52701		BOOT	ﾌﾞｰﾂ	2	[TLB](6-12 DEG.)
-	224T8-52711		BOOT	ﾌﾞｰﾂ	2	[TLB](6-6,3-6 DEG.) (6-10,3-3 DEG)
32	22678-42601		BAND	ﾊﾞﾝﾄﾞ	2	A,B,C,D,E,F:267-1322 G:136-282 H,J,K:108-253 L [TLB](6-12 DEG.)(OLD PART)
-	216G8-53011		BAND	ﾊﾞﾝﾄﾞ	2	A,B,C,D,E,F:1323- G:283- H,J,K:254- L [TLB](6-12 DEG.)(NEW PART)
-	224T8-53001		BAND	ﾊﾞﾝﾄﾞ	(2)	A,B,C,D,E,F:1323- G:283- H,J,K:254- L [TLB](6-12 DEG.)(NEW PART)
-	22678-42621		BAND	ﾊﾞﾝﾄﾞ	2	A,B,C,D,E,F:267-1322 G:136-282 H,J,K:108-253 L [TLB] (6-6,3-6,6-10,3-3 DEG.) (OLD PART)
-	216G8-53051		BAND	ﾊﾞﾝﾄﾞ	2	A,B,C,D,E,F:1323- G:283- H,J,K:254- L [TLB] (6-6,3-6,6-10,3-3 DEG.) (NEW PART)

FIG.136A TILT CYLINDER

(F4048511) ﾃｨﾙﾄｼﾘﾝﾀﾞ

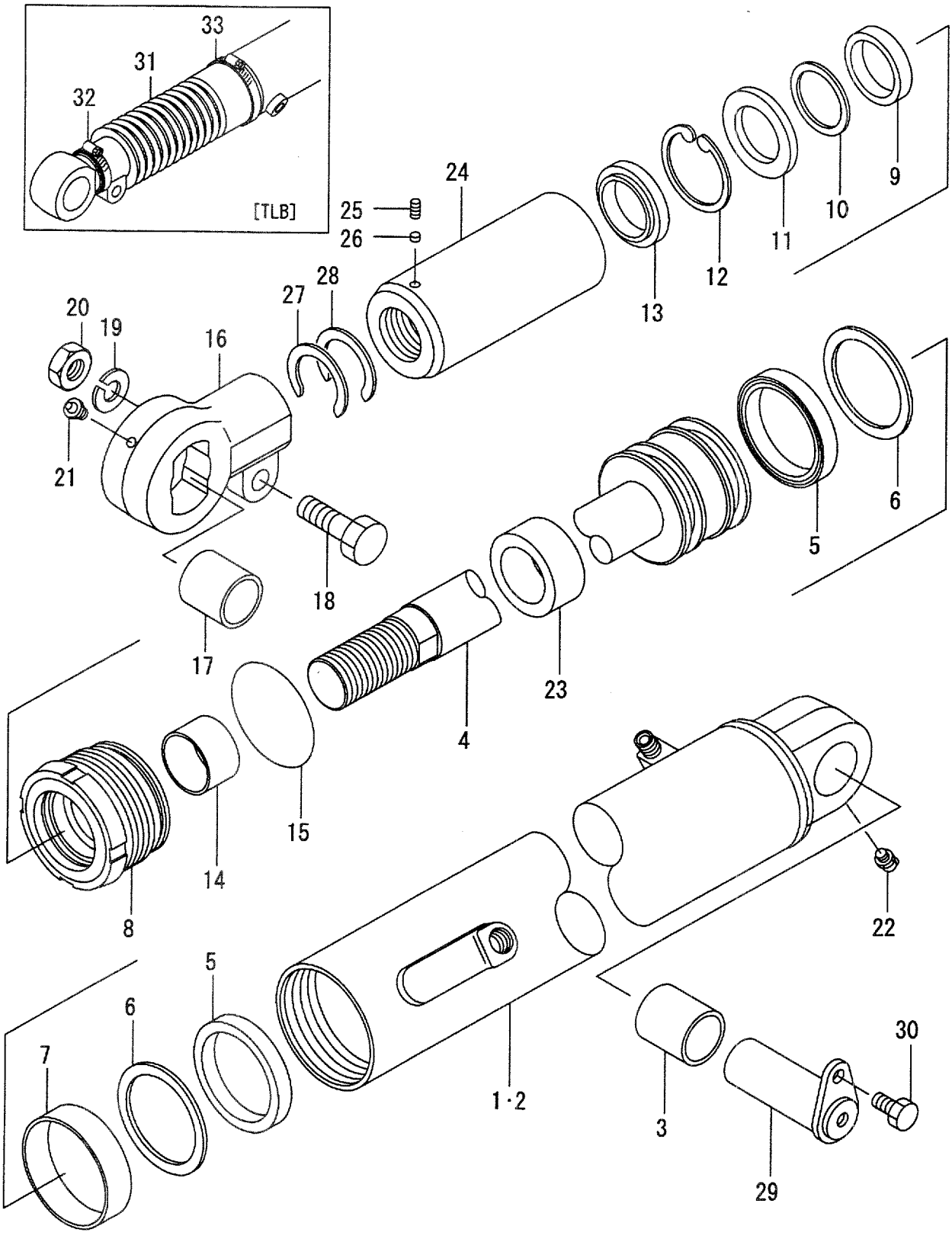

A:FD35C8:267- D:FD40T8:267- G:FD50T8:136- K:FG45T8:108-
B:FD35T8:267- E:FD45C8:267- H:FG35T8:108- L:FG50T8:103-
C:FD40C8:267- F:FD45T8:267- J:FG40T8:108-

FIG.136A
(F4048511)

Item No	Part No.	Mark	Description		Req'd	Remarks : Serial No.
-	224T8-53011		BAND	ﾊﾞﾝﾄﾞ	(2)	A,B,C,D,E,F:1323- G:283- H,J,K:254- L [TLB] (6-6,3-6,6-10,3-3 DEG.) (NEW PART)
33	22678-42631		BAND	ﾊﾞﾝﾄﾞ	2	A,B,C,D,E,F:267-1322 G:136-282 H,J,K:108-253 L [TLB]
-	224T8-53021		BAND	ﾊﾞﾝﾄﾞ	2	A,B,C,D,E,F:1323- G:283- H,J,K:254- L [TLB]
-	224T8-53031		BAND	ﾊﾞﾝﾄﾞ	(2)	A,B,C,D,E,F:1323- G:283- H,J,K:254- L [TLB]
K1	224T8-59801		KIT,OVERHAUL	ｵｰﾊﾞｰﾎｰﾙｷｯﾄ	2	INC.5-7,9,10,12,13,15

FIG.137 DECAL [JPN]

(F4049110) デカル

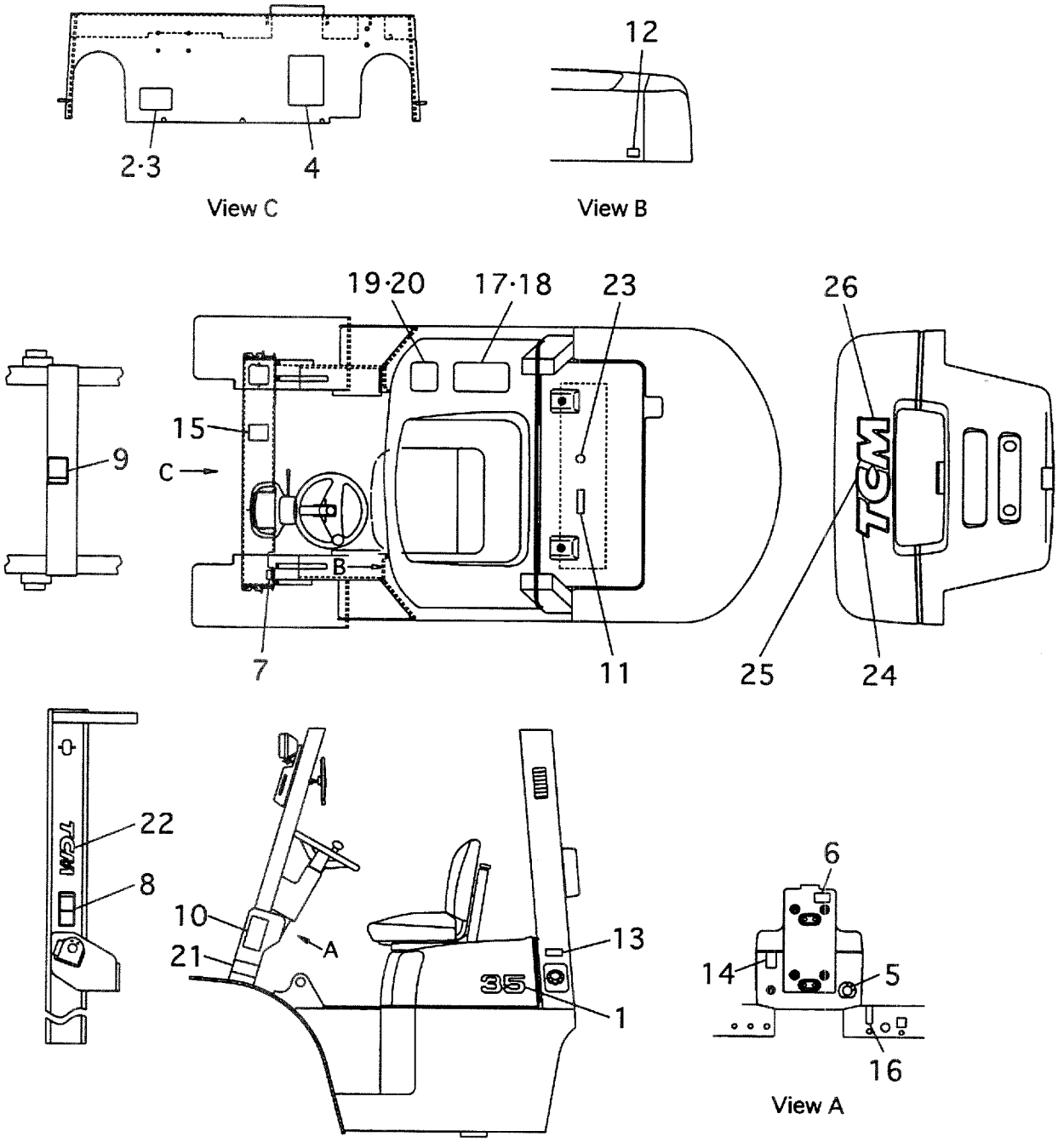

A:FD35C8 D:FD40T8 G:FD50T8 K:FG45T8
B:FD35T8 E:FD45C8 H:FG35T8 L:FG50T8
C:FD40C8 F:FD45T8 J:FG40T8

FIG.137
(F4049110)

Item No	Part No.	Mark	Description	Req'd	Remarks : Serial No.
1	235A9-12011		DECAL,MODEL-MARK デカル	2	A,B,H
-	235C9-12011		DECAL,MODEL-MARK デカル	2	C,D,J
-	235F9-12011		DECAL,MODEL-MARK デカル	2	E,F,K
-	235H9-12011		DECAL,MODEL-MARK デカル	2	G,L
2	216G9-10101		PLATE,NAME プレート	1	
3	216G9-12131		RIVET リベット	4	
4	25789-12051		DECAL,LUBRICATION デカル	1	
5	24359-12001		DECAL,STARTER-SW. デカル	1	A,B,C,D,E,F,G
-	21239-12011		DECAL,STARTER-SW. デカル	1	H,J,K,L
6	214A2-42141		DECAL,TURN-SIGNAL デカル	1	
7	214A5-53011		DECAL,BRAKE,LEVER-AD デカル	1	
8	27419-12062		DECAL,CAUTION-MAST デカル	2	
9	27419-12072		DECAL,CAUTION CROSS デカル	1	
10	216G9-12062		DECAL,CAUTION-TIRE デカル	1	
11	216G9-12052		DECAL,CAUTION-FAN デカル	1	
12	224W9-12091		DECAL,CAPACITY-FUEL デカル	1	
13	21159-12501		DECAL,LIGHT-OIL デカル	1	A,B,C,D,E,F,G
-	21239-12501		DECAL,GASOLINE デカル	1	H,J,K,L
14	210F9-12051		DECAL,LIGHTING-SW. デカル	1	A,B,C,D,E,H,J
-	23469-12122		DECAL,LIGHTING-SW. デカル	1	F,G,K,L
15	271A9-12251		DECAL,CAUTION デカル	1	
16	230C9-12071		DECAL,SPEED-HOLD デカル	1	F,G,K,L
17	23659-12053		PLATE,CAUTION プレート	1	A,B,C,D,E,F:1-814 G:1-214 H,J,K:1-217 L:1-107
-	23659-12054		PLATE,CAUTION プレート	1	A,B,C,D,E,F:815- G:215- H,J,K:218- L:108-
18	02432-01008		RIVET リベット	4	A,B,C,D,E,F:1-814 G:1-214 H,J,K:1-217 L:1-107
19	224T9-12201		PLATE,CAPACITY-CHART プレート	1	A,B,H (-VM500)
-	224T9-12211		PLATE,CAPACITY-CHART プレート	1	A,B,H (VM550-)
-	224W9-12201		PLATE,CAPACITY-CHART プレート	1	C,D,J (-VM500)
-	224W9-12211		PLATE,CAPACITY-CHART プレート	1	C,D,J (VM550-)
-	228C9-12201		PLATE,CAPACITY-CHART プレート	1	E,F,K (-VM500)
-	228C9-12211		PLATE,CAPACITY-CHART プレート	1	E,F,K (VM550-)
-	235H9-12201		PLATE,CAPACITY-CHART プレート	1	G,L (-VM500)
-	235H9-12211		PLATE,CAPACITY-CHART プレート	1	G,L (VM550-)

FIG.137 DECAL [JPN]

(F4049110) デカル

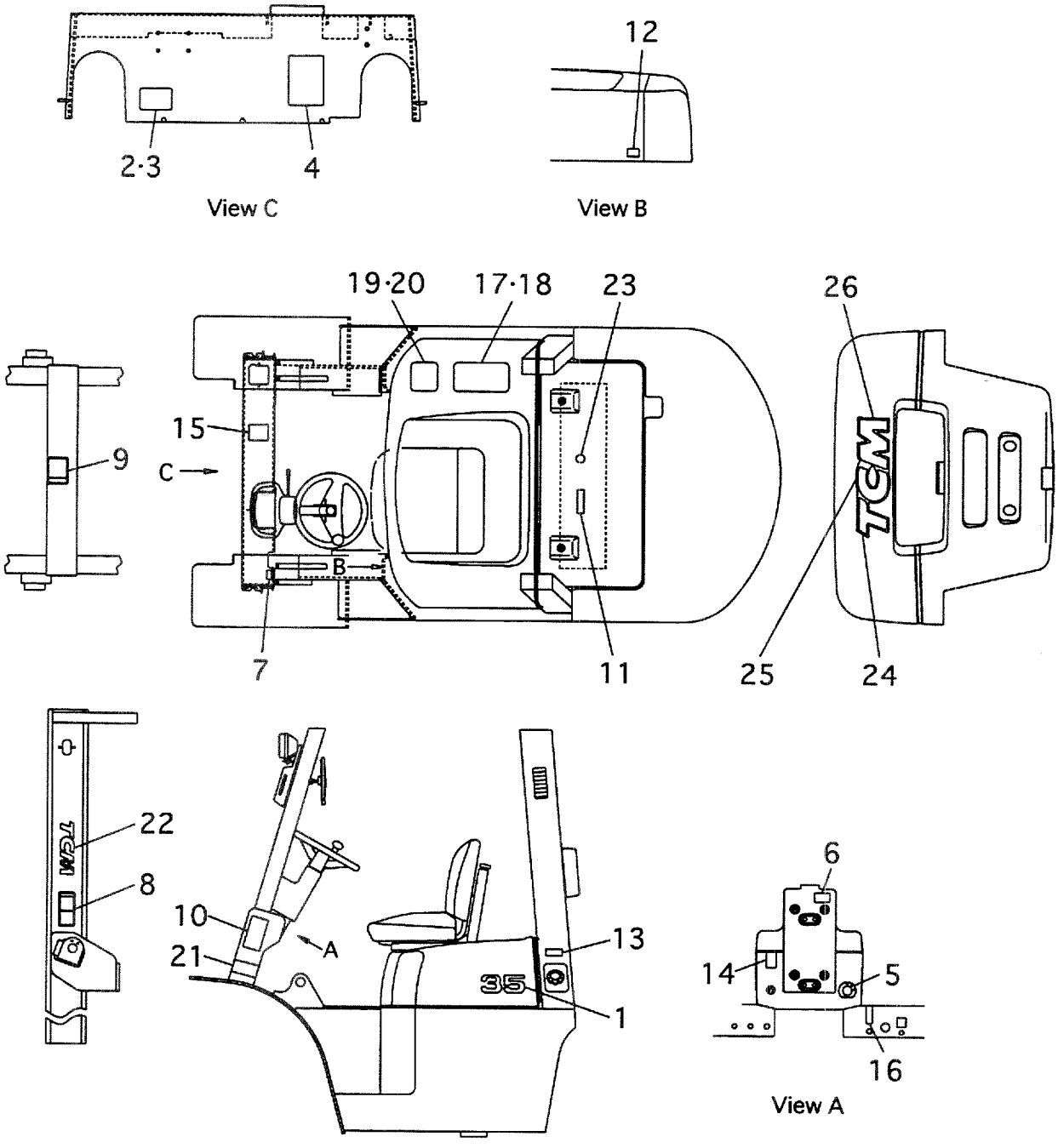

A:FD35C8 D:FD40T8 G:FD50T8 K:FG45T8
B:FD35T8 E:FD45C8 H:FG35T8 L:FG50T8
C:FD40C8 F:FD45T8 J:FG40T8

FIG.137
(F4049110)

Item No	Part No.	Mark	Description	Req'd	Remarks : Serial No.
-	63110-18901		PLATE,CAPACITY-CHART ﾌﾟﾚｰﾄ	1	[VFM24X][VFM28E]
20	02432-01008		RIVET ﾘﾍﾞｯﾄ	4	
21	224W9-12071		DECAL,AIR-PRESS-TIRE ﾃﾞｶﾙ	1	A,B,C,D,H,J
-	228E9-12111		DECAL,AIR-PRESS-TIRE ﾃﾞｶﾙ	1	E,F,G,K,L
22	273A9-12242		DECAL,MAST ﾃﾞｶﾙ	2	
23	23659-12101		DECAL,L.LIFE COOLANT ﾃﾞｶﾙ	1	
24	235C9-12021		DECAL,BALANCE-WEIGHT ﾃﾞｶﾙ	1	
25	235C9-12031		DECAL,BALANCE-WEIGHT ﾃﾞｶﾙ	1	
26	235C9-12041		DECAL,BALANCE-WEIGHT ﾃﾞｶﾙ	1	

FIG.138 DECAL [EXA,EXB,EXC,EXE,EXK,EXN]

(F4049120) デカル

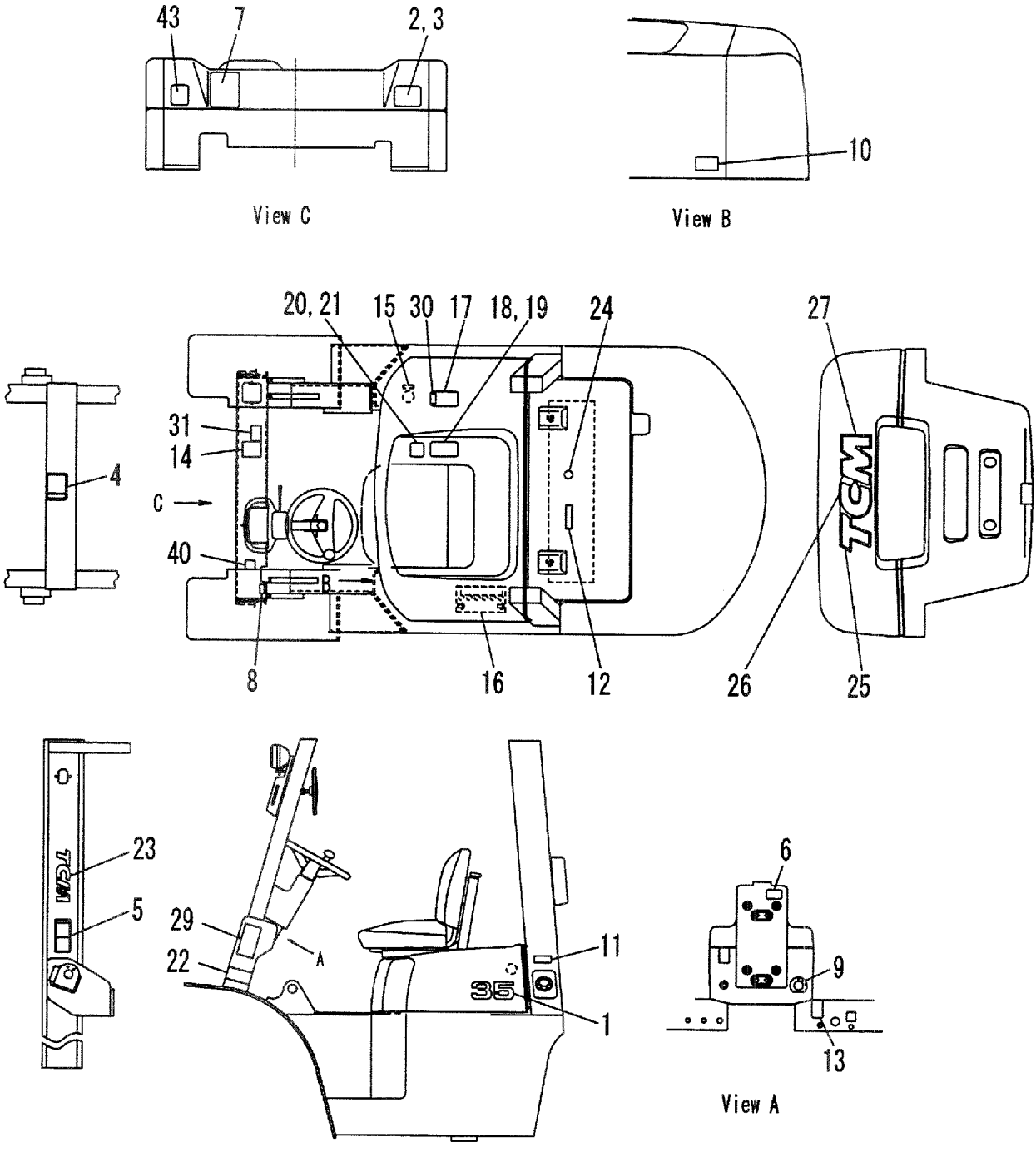

A:FD35C8 D:FD40T8 G:FD50T8 K:FG45T8
B:FD35T8 E:FD45C8 H:FG35T8 L:FG50T8
C:FD40C8 F:FD45T8 J:FG40T8

FIG.138
(F4049120)

Item No	Part No.	Mark	Description	Req'd	Remarks : Serial No.
1	235A9-12011		DECAL,MODEL-MARK デカル	1	A,B,H [EXA][EXB][EXC][EXE][EXK] [EXN]
-	235C9-12011		DECAL,MODEL-MARK デカル	1	C,D,J [EXA][EXB][EXC][EXE][EXK] [EXN]
-	235F9-12011		DECAL,MODEL-MARK デカル	1	E,F,K [EXA][EXB][EXC][EXE][EXK] [EXN]
-	235H9-12011		DECAL,MODEL-MARK デカル	1	G,L [EXA][EXB][EXC][EXE][EXK] [EXN]
2	516G3-82401		PLATE,NAME プレート	1	[EXEEC/ENP][EXNEC/ENP]
-	516G2-62051		PLATE,NAME プレート	1	[EXE/ENP][EXN/ENP]
-	516G2-82001		PLATE,NAME プレート	1	[EXB/ENP][EXC/ENP] [EXK/ENP]
-	516G2-82001		PLATE,NAME プレート	1	B,D,F,G,H,J,K,L [EXA/ENP]
-	516G2-82011		PLATE,NAME プレート	1	[EXB/SNP][EXE/SNP]
-	516G3-82311		PLATE,NAME プレート	1	[EXE/SNP]
-	516G2-82021		PLATE,NAME プレート	1	[EXB/FNP][EXE/FNP]
-	516G3-82321		PLATE,NAME プレート	1	[EXE/FNP]
-	516G3-82301		PLATE,NAME プレート	1	[EXE/TNP]
-	516G3-82331		PLATE,NAME プレート	1	[EXE/ONP]
-	516G3-82341		PLATE,NAME プレート	1	[EXE/DNP][EXN/DNP]
-	516G3-82351		PLATE,NAME プレート	1	[EXE/INP]
-	516G3-82361		PLATE,NAME プレート	1	[EXE/GNP]
-	516G3-82371		PLATE,NAME プレート	1	[EXE/PNP]
-	516G2-82031		PLATE,NAME プレート	1	[EXB/CNP]
-	529F3-82381		PLATE,NAME プレート	1	A,B,C,D,E,F:1-293 G:1-137 H,J,K:1-111 L:1-102 [EXN/FINP]
-	516G3-82381		PLATE,NAME プレート	1	A,B,C,D,E,F:294- G:138- H,J,K:112- L:103- [EXN/FINP]
-	529F3-82132		PLATE,NAME プレート	1	A,B,C,D,E,F:1-293 G:1-137 H,J,K:1-111 L:1-102 [EXN/SENP]
-	516G3-82391		PLATE,NAME プレート	1	A,B,C,D,E,F:294- G:138- H,J,K:112- L:103- [EXN/SENP]
-	232W9-10101		PLATE,NAME プレート	1	[EXB/RNP]

FIG.138 DECAL [EXA,EXB,EXC,EXE,EXK,EXN]

(F4049120) デカル

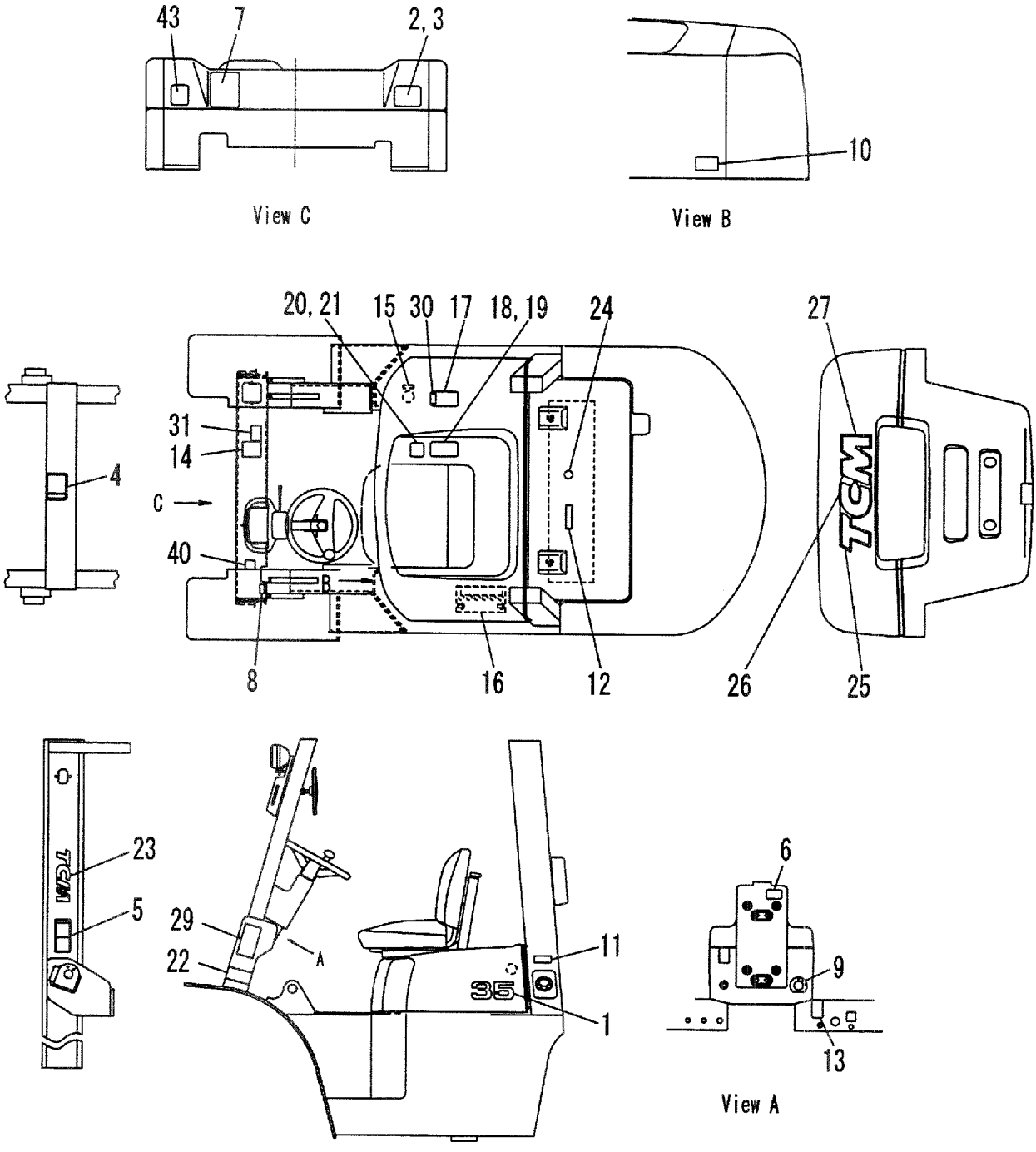

FIG.138
(F4049120)

Item No	Part No.	Mark	Description		Req'd	Remarks : Serial No.
3	216G9-12131		RIVET	ﾘﾍﾞｯﾄ	4	[EXB][EXC][EXE][EXK][EXN]
4	27419-12071		DECAL,CAUTION,CROSS	ﾃﾞｶﾙ	1	[EXB][EXC][EXE][EXK][EXN]
5	27419-12061		DECAL,CAUTION,MAST	ﾃﾞｶﾙ	2	[EXB][EXC][EXE][EXK][EXN]
6	214A2-42141		DECAL,TURN,SIGNAL	ﾃﾞｶﾙ	1	[EXB][EXC][EXE][EXK][EXN]
7	52672-72122		DECAL,LUBRICATION	ﾃﾞｶﾙ	1	[EXB/ENP][EXC/ENP] [EXE/ENP][EXK/ENP] [EXN/ENP]
-	52672-72122		CHART,LUBRICATION	ﾁｬｰﾄ	1	B,D,F,G,H,J,K,L [EXA/ENP]
-	53652-82352		DECAL,LUBRICATION	ﾃﾞｶﾙ	1	[EXB/SNP][EXE/SNP]
-	22959-12052		DECAL,LUBRICATION	ﾃﾞｶﾙ	1	[EXB/FNP][EXE/FNP]
-	55953-02032		DECAL,LUBRICATION	ﾃﾞｶﾙ	1	[EXE/TNP]
-	522A3-83081		DECAL,LUBRICATION	ﾃﾞｶﾙ	1	[EXE/ONP]
-	522A3-83281		DECAL,LUBRICATION	ﾃﾞｶﾙ	1	[EXE/DNP][EXN/DNP]
-	522A3-83481		DECAL,LUBRICATION	ﾃﾞｶﾙ	1	[EXE/INP]
-	522A3-83681		DECAL,LUBRICATION	ﾃﾞｶﾙ	1	[EXE/GNP]
-	522A3-83881		DECAL,LUBRICATION	ﾃﾞｶﾙ	1	[EXE/PNP]
-	52672-82062		DECAL,LUBRICATION	ﾃﾞｶﾙ	1	[EXB/CNP]
-	529F3-82161		DECAL,LUBRICATION	ﾃﾞｶﾙ	1	[EXN/FINP]
-	529F3-82171		DECAL,LUBRICATION	ﾃﾞｶﾙ	1	[EXN/SENP]
-	225R9-12031		DECAL,LUBRICATION	ﾃﾞｶﾙ	1	[EXB/RNP]
8	514A3-82001		DECAL,PARKING,LEVER	ﾃﾞｶﾙ	1	[EXB/ENP][EXC/ENP] [EXE/ENP][EXK/ENP] [EXN/ENP]
-	514A2-72351		DECAL,PARKING,LEVER	ﾃﾞｶﾙ	1	B,D,F,G,H,J,K,L [EXA/ENP]
-	514A3-82011		DECAL,PARKING,LEVER	ﾃﾞｶﾙ	1	[EXB/SNP][EXE/SNP]
-	514A3-82021		DECAL,PARKING,LEVER	ﾃﾞｶﾙ	1	[EXB/FNP][EXE/FNP]
-	514A3-02001		DECAL,PARKING,LEVER	ﾃﾞｶﾙ	1	[EXE/TNP]
-	514A3-82031		DECAL,PARKING,LEVER	ﾃﾞｶﾙ	1	[EXE/ONP]
-	514A3-82041		DECAL,PARKING,LEVER	ﾃﾞｶﾙ	1	[EXE/DNP][EXN/DNP]
-	514A3-82051		DECAL,PARKING,LEVER	ﾃﾞｶﾙ	1	[EXE/INP]
-	514A3-82061		DECAL,PARKING,LEVER	ﾃﾞｶﾙ	1	[EXE/GNP]
-	514A3-82071		DECAL,PARKING,LEVER	ﾃﾞｶﾙ	1	[EXE/PNP]
-	514A2-82011		DECAL,PARKING,LEVER	ﾃﾞｶﾙ	1	[EXB/CNP]
-	529F3-82241		DECAL,PARKING,LEVER	ﾃﾞｶﾙ	1	[EXN/FINP]
-	529F3-82251		DECAL,PARKING,LEVER	ﾃﾞｶﾙ	1	[EXN/SENP]
-	225R9-12111		DECAL,PARKING,LEVER	ﾃﾞｶﾙ	1	[EXB/RNP]
9	24359-12001		DECAL,STARTER,SW.	ﾃﾞｶﾙ	1	A,B,C,D,E,F,G [EXB/ENP][EXC/ENP] [EXE/ENP]
-	24359-12001		DECAL,STARTER,SW.	ﾃﾞｶﾙ	1	A,B,C,D,E,F,G [EXK/ENP][EXN/ENP] [EXB/CNP]
-	24359-12001		DECAL,STARTER,SW.	ﾃﾞｶﾙ	1	B,D,F,G [EXA/ENP]
-	55953-82651		DECAL,STARTER,SW.	ﾃﾞｶﾙ	1	A,B,C,D,E,F,G [EXB/SNP][EXE/SNP]
-	55953-82851		DECAL,STARTER,SW.	ﾃﾞｶﾙ	1	A,B,C,D,E,F,G [EXB/FNP][EXE/FNP]

FIG.138 DECAL [EXA,EXB,EXC,EXE,EXK,EXN]

(F4049120) デカル

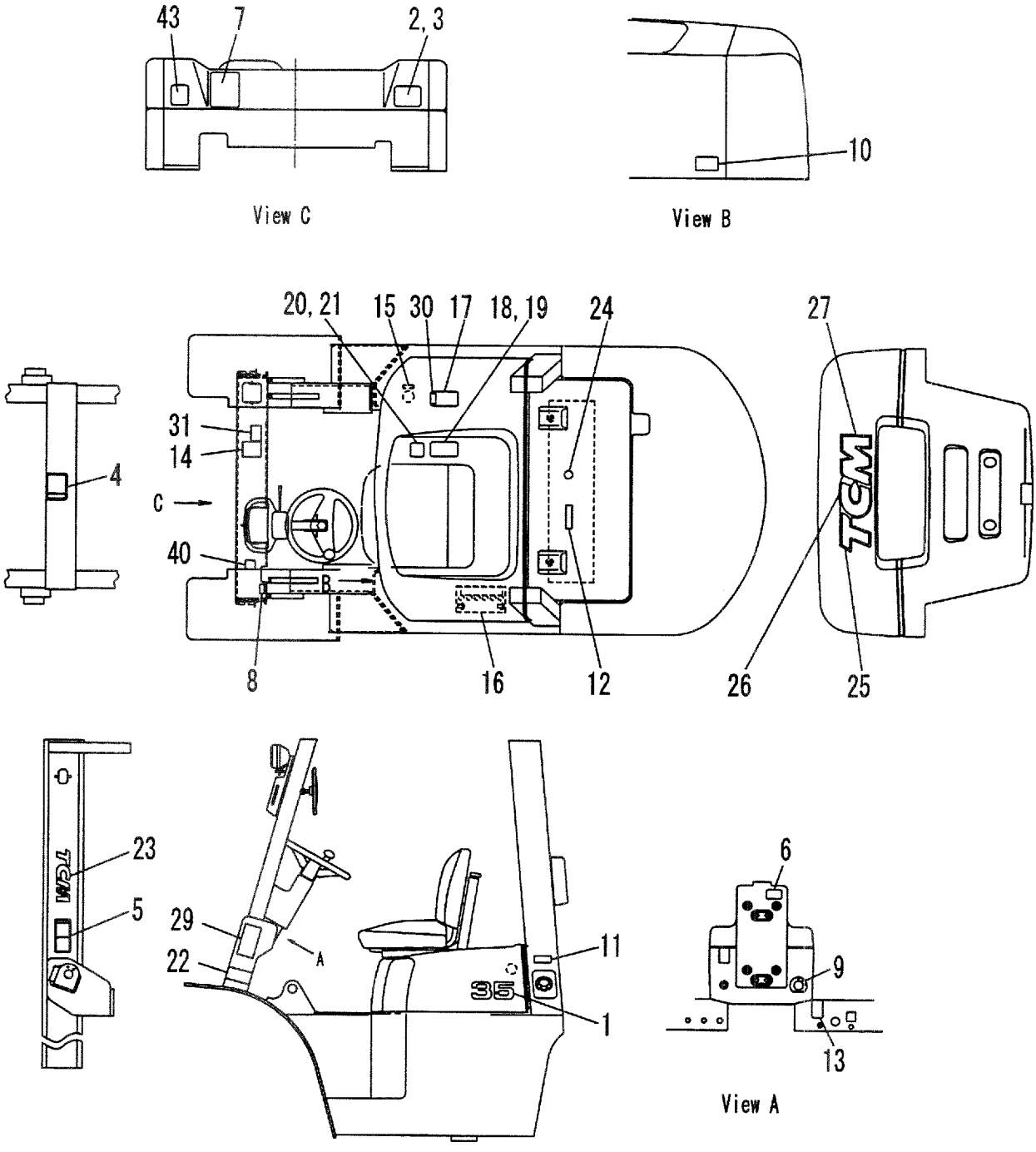

A:FD35C8 D:FD40T8 G:FD50T8 K:FG45T8
B:FD35T8 E:FD45C8 H:FG35T8 L:FG50T8
C:FD40C8 F:FD45T8 J:FG40T8

FIG.138
(F4049120)

Item No	Part No.	Mark	Description	Req'd	Remarks : Serial No.
-	55953-02021		DECAL,STARTER,SW. デカル	1	A,B,C,D,E,F,G [EXE/TNP]
-	55953-83051		DECAL,STARTER,SW. デカル	1	A,B,C,D,E,F,G [EXE/ONP]
-	55953-83251		DECAL,STARTER,SW. デカル	1	A,B,C,D,E,F,G [EXE/DNP][EXN/DNP]
-	55953-83451		DECAL,STARTER,SW. デカル	1	A,B,C,D,E,F,G [EXE/INP]
-	55953-83651		DECAL,STARTER,SW. デカル	1	A,B,C,D,E,F,G [EXE/GNP]
-	55953-83851		DECAL,STARTER,SW. デカル	1	A,B,C,D,E,F,G [EXE/PNP]
-	529F3-82001		DECAL,STARTER,SW. デカル	1	A,B,C,D,E,F,G [EXN/FINP]
-	529F3-82011		DECAL,STARTER,SW. デカル	1	A,B,C,D,E,F,G [EXN/SENP]
-	225R9-12121		DECAL,STARTER,SW. デカル	1	A,B,C,D,E,F,G [EXB/RNP]
-	21239-12011		DECAL,STARTER,SW. デカル	1	H,J,K,L [EXB/ENP][EXC/ENP] [EXE/ENP]
-	21239-12011		DECAL,STARTER,SW. デカル	1	H,J,K,L [EXK/ENP][EXN/ENP] [EXB/CNP]
-	522A3-82651		DECAL,STARTER,SW. デカル	1	H,J,K,L [EXB/SNP][EXE/SNP]
-	21239-12011		DECAL,STARTER,SW. デカル	1	H,J,K,L [EXB/FNP][EXE/FNP]
-	51233-02031		DECAL,STARTER,SW. デカル	1	H,J,K,L [EXB/TNP]
-	522A3-83051		DECAL,STARTER,SW. デカル	1	H,J,K,L [EXE/ONP]
-	522A3-83251		DECAL,STARTER,SW. デカル	1	H,J,K,L [EXE/DNP][EXN/DNP]
-	522A3-83451		DECAL,STARTER,SW. デカル	1	H,J,K,L [EXE/INP]
-	522A3-83651		DECAL,STARTER,SW. デカル	1	H,J,K,L [EXE/GNP]
-	21239-12011		DECAL,STARTER,SW. デカル	1	H,J,K,L [EXE/PNP]
-	528F3-82001		DECAL STARTER SW. デカル	1	H,J,K,L [EXN/FINP]
-	528F3-82011		DECAL,STARTER,SW. デカル	1	H,J,K,L [EXN/SENP]
10	524W3-82101		DECAL,CAPACITY,FUEL デカル	1	[EXB/ENP][EXC/ENP] [EXE/ENP][EXK/ENP] [EXN/ENP]
-	524W2-72151		DECAL,CAPACITY,FUEL デカル	1	B,D,F,G,J,K,L [EXA/ENP]
-	524W3-82111		DECAL,CAPACITY,FUEL デカル	1	[EXB/SNP][EXE/SNP]

FIG.138 DECAL [EXA,EXB,EXC,EXE,EXK,EXN]

(F4049120) デカル

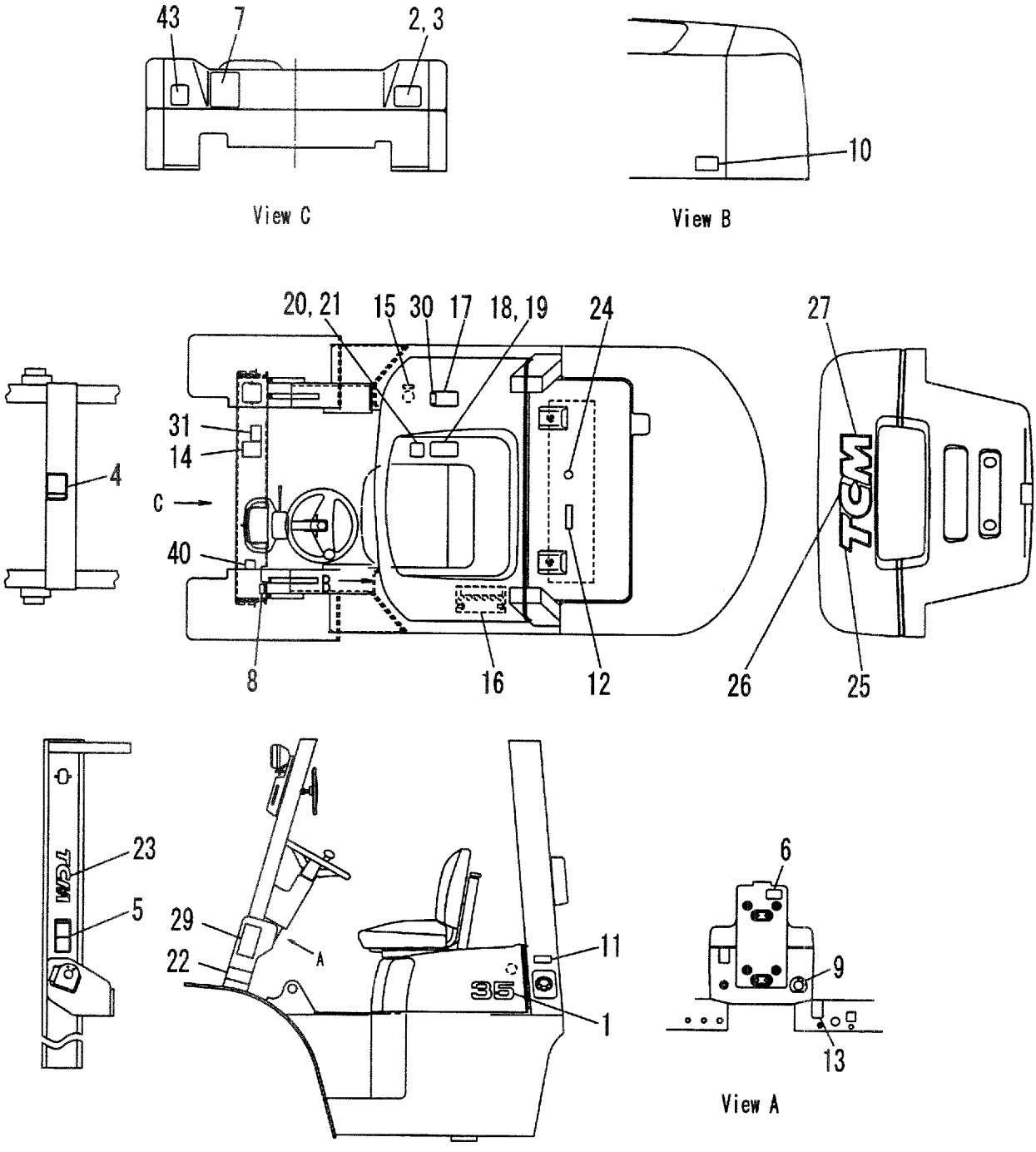

FIG.138
(F4049120)

Item No	Part No.	Mark	Description	Req'd	Remarks : Serial No.
-	524W3-82121		DECAL,CAPACITY,FUEL デカル	1	[EXB/FNP][EXE/FNP]
-	524W3-02101		DECAL,CAPACITY,FUEL デカル	1	[EXE/TNP]
-	524W3-82131		DECAL,CAPACITY,FUEL デカル	1	[EXE/ONP]
-	524W3-82141		DECAL,CAPACITY,FUEL デカル	1	[EXE/DNP][EXN/DNP]
-	524W3-82151		DECAL,CAPACITY,FUEL デカル	1	[EXE/INP]
-	524W3-82161		DECAL,CAPACITY,FUEL デカル	1	[EXE/GNP]
-	524W3-82171		DECAL,CAPACITY,FUEL デカル	1	[EXE/PNP]
-	524W2-82101		DECAL,CAPACITY,FUEL デカル	1	[EXB/CNP]
-	524W3-82181		DECAL,CAPACITY,FUEL デカル	1	[EXN/FINP]
-	524W3-82191		DECAL,CAPACITY,FUEL デカル	1	[EXN/SENP]
-	225N9-12001		DECAL,CAPACITY,FUEL デカル	1	[EXB/RNP]
11	51152-82001		DECAL,LIGHT,OIL デカル	1	A,B,C,D,E,F,G [EXB/ENP][EXC/ENP] [EXE/ENP][EXK/ENP] [EXN/ENP]
-	51152-82001		DECAL,LIGHT,OIL デカル	1	B,D,F,G [EXA/ENP]
-	55953-83021		DECAL,LIGHT,OIL デカル	1	A,B,C,D,E,F,G [EXB/SNP][EXE/SNP] [EXB/FNP][EXE/FNP]
-	55953-83021		DECAL,LIGHT,OIL デカル	1	A,B,C,D,E,F,G [EXE/ONP][EXE/DNP]
-	55953-83021		DECAL,LIGHT,OIL デカル	1	A,B,C,D,E,F,G [EXN/FINP][EXN/SENP]
-	51153-02001		DECAL,LIGHT,OIL デカル	1	A,B,C,D,E,F,G [EXE/TNP]
-	55953-83421		DECAL,LIGHT,OIL デカル	1	A,B,C,D,E,F,G [EXE/INP]
-	55953-83621		DECAL,LIGHT,OIL デカル	1	A,B,C,D,E,F,G [EXE/GNP]
-	55953-83821		DECAL,LIGHT,OIL デカル	1	A,B,C,D,E,F,G [EXE/PNP]
-	51232-82031		DECAL,LIGHT,OIL デカル	1	A,B,C,D,E,F,G [EXB/CNP]
-	225R9-12001		DECAL,LIGHT,OIL デカル	1	A,B,C,D,E,F,G [EXB/RNP]
-	51232-82001		DECAL,GASOLINE デカル	1	H,J,K,L [EXA/ENP][EXB/ENP] [EXC/ENP]
-	51232-82001		DECAL,GASOLINE デカル	1	H,J,K,L [EXE/ENP][EXK/ENP] [EXN/ENP]
-	51232-82021		DECAL,GASOLINE デカル	1	H,J,K,L [EXB/SNP][EXE/SNP]
-	51232-82011		DECAL,GASOLINE デカル	1	H,J,K,L [EXB/FNP][EXE/FNP]
-	51233-83021		DECAL,GASOLINE デカル	1	H,J,K,L [EXE/ONP]
-	51233-83221		DECAL,GASOLINE デカル	1	H,J,K,L [EXE/DNP][EXN/DNP]

FIG.138 DECAL [EXA,EXB,EXC,EXE,EXK,EXN]

(F4049120) デカル

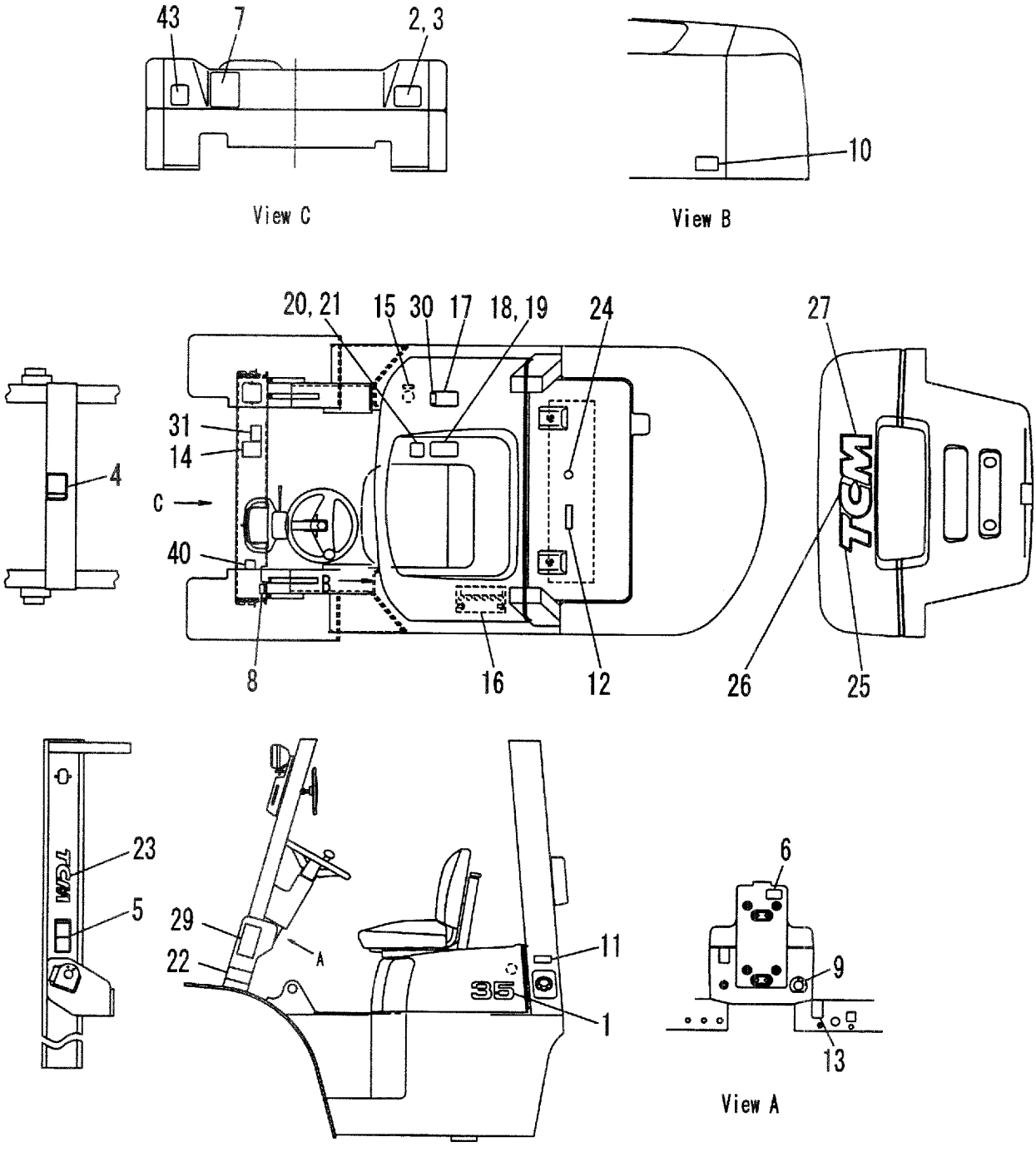

A:FD35C8 D:FD40T8 G:FD50T8 K:FG45T8
B:FD35T8 E:FD45C8 H:FG35T8 L:FG50T8
C:FD40C8 F:FD45T8 J:FG40T8

FIG.138
(F4049120)

Item No	Part No.	Mark	Description	Req'd	Remarks : Serial No.
-	51233-02011		DECAL,GASOLINE デカル	1	H,J,K,L [EXE/TNP]
-	51233-83421		DECAL,GASOLINE デカル	1	H,J,K,L [EXE/INP]
-	51233-83621		DECAL,GASOLINE デカル	1	H,J,K,L [EXE/GNP]
-	51233-83821		DECAL,GASOLINE デカル	1	H,J,K,L [EXE/PNP]
-	51232-82032		DECAL,GASOLINE デカル	1	H,J,K,L [EXB/CNP]
-	528F3-82021		DECAL,GASOLINE デカル	1	H,J,K,L [EXN/FINP]
-	528F3-82031		DECAL,GASOLINE デカル	1	H,J,K,L [EXN/SENP]
12	516G2-72701		DECAL,CAUTION,FAN デカル	1	[EXB/ENP][EXC/ENP] [EXE/ENP][EXK/ENP] [EXN/ENP]
-	514A2-71011		DECAL,CAUTION,FAN デカル	1	B,D,F,G,J,K,L [EXA/ENP]
-	516G3-82111		DECAL,CAUTION,FAN デカル	1	[EXB/SNP][EXE/SNP]
-	516G3-82121		DECAL,CAUTION,FAN デカル	1	[EXB/FNP][EXE/FNP]
-	516G3-82101		DECAL,CAUTION,FAN デカル	1	[EXE/TNP]
-	516G3-82131		DECAL,CAUTION,FAN デカル	1	[EXE/ONP]
-	516G3-82141		DECAL,CAUTION,FAN デカル	1	[EXE/DNP][EXN/DNP]
-	516G3-82151		DECAL,CAUTION,FAN デカル	1	[EXE/INP]
-	516G3-82161		DECAL,CAUTION,FAN デカル	1	[EXE/GNP]
-	516G3-82171		DECAL,CAUTION,FAN デカル	1	[EXE/PNP]
-	516G2-82051		DECAL,CAUTION,FAN デカル	1	[EXB/CNP]
-	516G3-82181		DECAL,CAUTION,FAN デカル	1	[EXN/FINP]
-	516G3-82191		DECAL,CAUTION,FAN デカル	1	[EXN/SENP]
-	232W9-12011		DECAL,CAUTION,FAN デカル	1	[EXB/RNP]
13	530C2-72401		DECAL,SELECT,SW. デカル	1	F,G,K,L [EXA/ENP][EXB/ENP] [EXC/ENP]
-	530C2-72401		DECAL,SELECT,SW. デカル	1	F:1-691 G:1-193 K:1-171 L:1-106 [EXE/ENP][EXK/ENP] [EXN/ENP]
-	535H3-82301		DECAL,SELECT,SW. デカル	1	F:692- G:194- K:172- L:107- [EXE/ENP][EXK/ENP] [EXN/ENP]

FIG.138 DECAL [EXA,EXB,EXC,EXE,EXK,EXN]

(F4049120) デカル

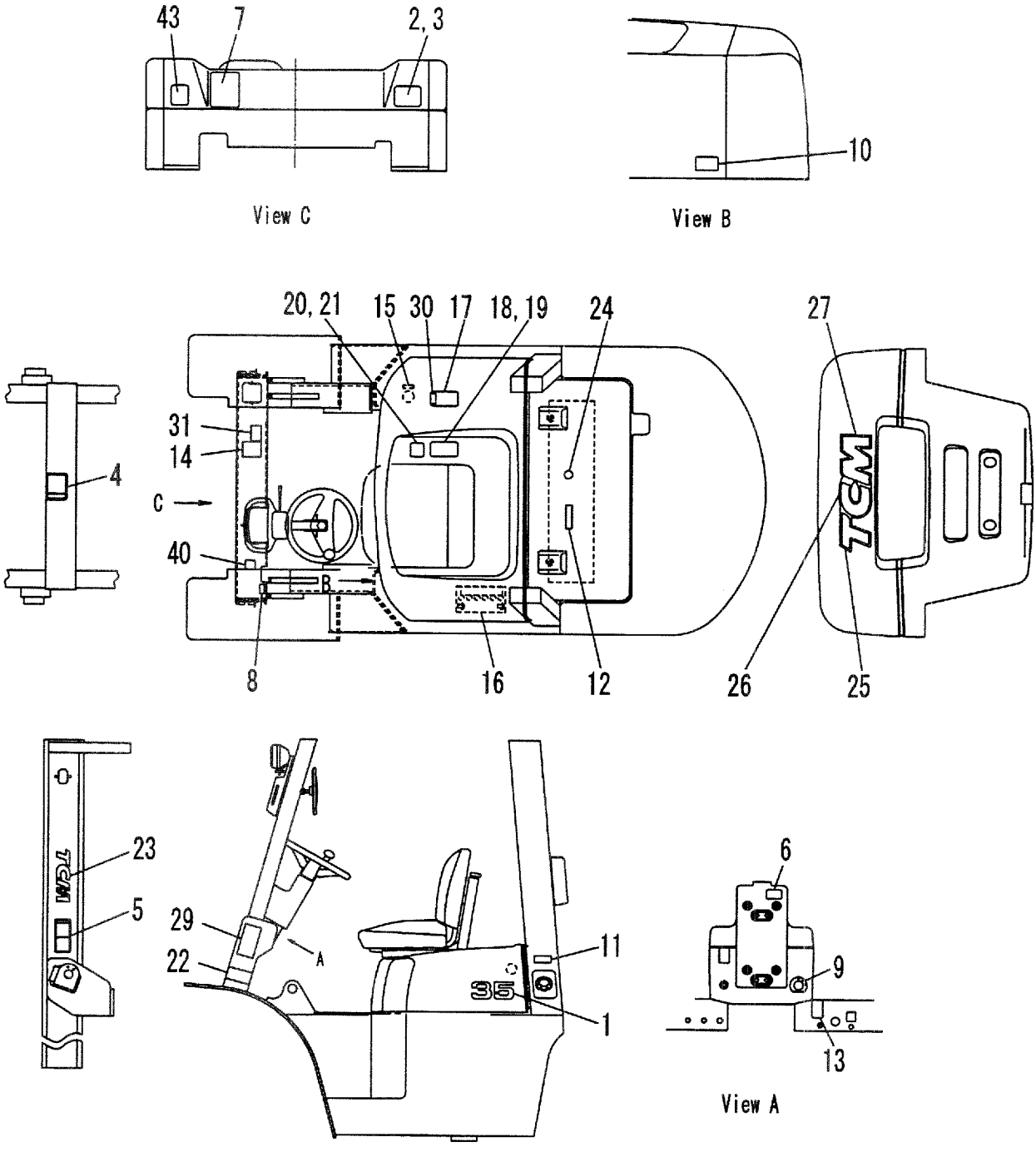

A:FD35C8 D:FD40T8 G:FD50T8 K:FG45T8
B:FD35T8 E:FD45C8 H:FG35T8 L:FG50T8
C:FD40C8 F:FD45T8 J:FG40T8

FIG.138
(F4049120)

Item No	Part No.	Mark	Description	Req'd	Remarks : Serial No.
-	530C3-82511		DECAL,SELECT,SW. ﾃﾞｶﾙ	1	F:1-691 G:1-193 K:1-171 L:1-106 [EXB/SNP][EXE/SNP]
-	535H3-82311		DECAL,SELECT,SW. ﾃﾞｶﾙ	1	F:692- G:194- K:172- L:107- [EXB/SNP][EXE/SNP]
-	530C3-82521		DECAL,SELECT,SW. ﾃﾞｶﾙ	1	F:1-691 G:1-193 K:1-171 L:1-106 [EXB/FNP][EXE/FNP]
-	535H3-82321		DECAL,SELECT,SW. ﾃﾞｶﾙ	1	F:692- G:194- K:172- L:107- [EXB/FNP][EXE/FNP]
-	530C3-02101		DECAL,SELECT,SW. ﾃﾞｶﾙ	1	F,G,K,L [EXE/TNP]
-	530C3-82531		DECAL,SELECT,SW. ﾃﾞｶﾙ	1	F:1-161 G:1-193 K:1-171 L:1-106 [EXE/TNP][EXE/ONP]
-	535H5-82331		DECAL,SELECT,SW. ﾃﾞｶﾙ	1	F:162- G:194- K:172- L:107- [EXE/TNP][EXE/ONP]
-	530C3-82541		DECAL,SELECT,SW. ﾃﾞｶﾙ	1	F:1-161 G:1-193 K:1-171 L:1-106 [EXE/DNP][EXN/DNP]
-	535H5-82351		DECAL,SELECT,SW. ﾃﾞｶﾙ	1	F:162- G:194- K:172- L:107- [EXE/DNP][EXN/DNP]
-	530C3-82551		DECAL,SELECT,SW. ﾃﾞｶﾙ	1	F:1-161 G:1-193 K:1-171 L:1-106 [EXE/INP]

FIG.138 DECAL [EXA,EXB,EXC,EXE,EXK,EXN]

(F4049120) デカル

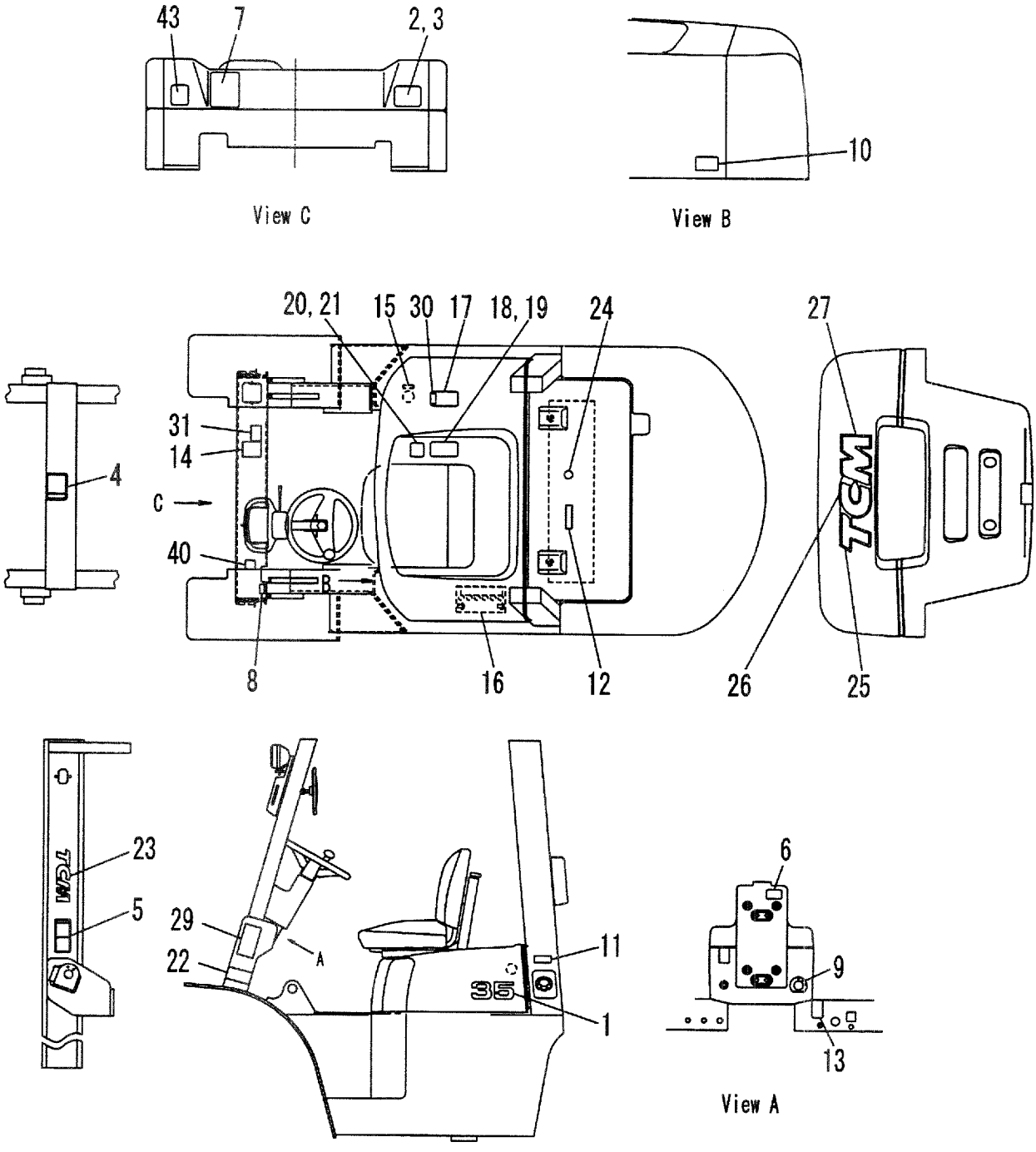

FIG.138
(F4049120)

Item No	Part No.	Mark	Description	Req'd	Remarks : Serial No.
-	535H3-82361		DECAL,SELECT,SW. デカル	1	F:162- G:194- K:172- L:107- [EXE/INP]
-	530C3-82561		DECAL,SELECT,SW. デカル	1	F:1-161 G:1-193 K:1-171 L:1-106 [EXE/GNP]
-	535H3-82371		DECAL,SELECT,SW. デカル	1	F:162- G:194- K:172- L:107- [EXE/GNP]
-	530C3-82571		DECAL,SELECT,SW. デカル	1	F:1-161 G:1-193 K:1-171 L:1-106 [EXE/PNP]
-	535H3-82381		DECAL,SELECT,SW. デカル	1	F:162- G:194- K:172- L:107- [EXE/PNP]
-	530C2-82201		DECAL,SELECT,SW. デカル	1	F,G,K,L [EXB/CNP]
-	530C3-82581		DECAL,SELECT,SW. デカル	1	F:1-161 G:1-193 K:1-171 L:1-106 [EXN/FINP]
-	535H3-82391		DECAL,SELECT,SW. デカル	1	F:162- G:194- K:172- L:107- [EXN/FINP]
-	530C3-82591		DECAL,SELECT,SW. デカル	1	F:1-161 G:1-193 K:1-171 L:1-106 [EXN/SENP]
-	535H3-82401		DECAL,SELECT,SW. デカル	1	F:162- G:194- K:172- L:107- [EXN/SENP]
14	571A3-82361		DECAL,CAUTION デカル	1	[EXA][EXB][EXC][EXE][EXK] [EXN]

FIG.138 DECAL [EXA,EXB,EXC,EXE,EXK,EXN]

(F4049120) デカル

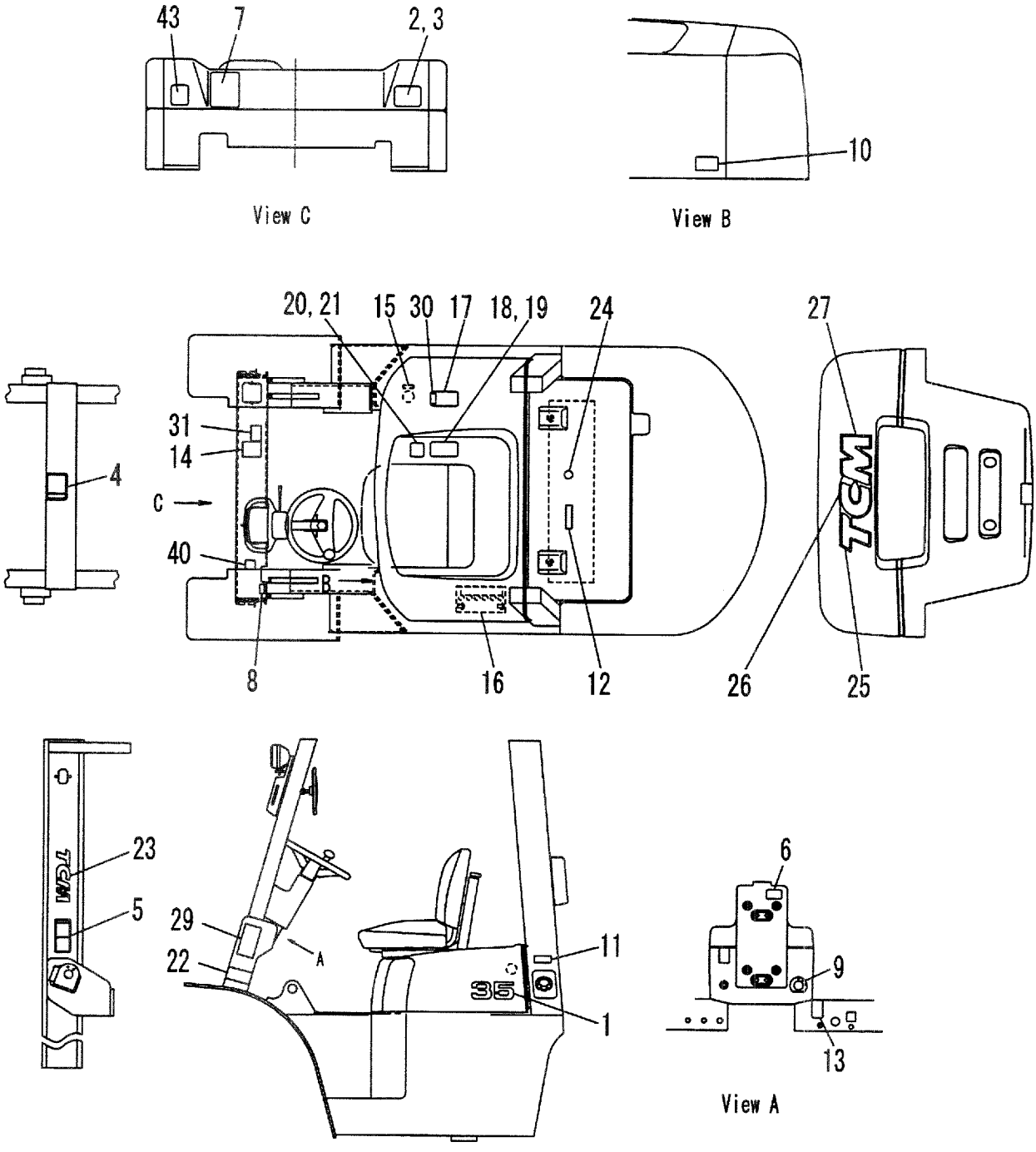

A:FD35C8 D:FD40T8 G:FD50T8 K:FG45T8
B:FD35T8 E:FD45C8 H:FG35T8 L:FG50T8
C:FD40C8 F:FD45T8 J:FG40T8

FIG.138
(F4049120)

Item No	Part No.	Mark	Description		Req'd	Remarks : Serial No.
-	571A2-72201		DECAL,CAUTION	ﾃﾞｶﾙ	1	B,D,F,G,H,J,K,L [EXA/ENP]
15	53652-82401		DECAL,OIL	ﾃﾞｶﾙ	1	[EXB/SNP][EXE/SNP]
-	53652-82011		DECAL,OIL	ﾃﾞｶﾙ	1	[EXB/FNP][EXE/FNP]
-	51233-02021		DECAL,OIL	ﾃﾞｶﾙ	1	[EXE/TNP]
-	522A3-83061		DECAL,OIL	ﾃﾞｶﾙ	1	[EXE/ONP][EXE/DNP] [EXN/DNP]
-	522A3-83461		DECAL,OIL	ﾃﾞｶﾙ	1	[EXE/INP]
-	522A3-83661		DECAL,OIL	ﾃﾞｶﾙ	1	[EXE/GNP]
-	522A3-83861		DECAL,OIL	ﾃﾞｶﾙ	1	[EXE/PNP]
-	53652-82541		DECAL,OIL	ﾃﾞｶﾙ	1	[EXB/CNP]
-	529F3-82061		DECAL,OIL	ﾃﾞｶﾙ	1	[EXN/FINP]
-	529F3-82071		DECAL,OIL	ﾃﾞｶﾙ	1	[EXN/SENP]
-	225R9-12071		DECAL,OIL	ﾃﾞｶﾙ	1	[EXB/RNP]
16	53652-82391		DECAL,BATTERY	ﾃﾞｶﾙ	3	A,B,C,D,E,H,J F:1-691 G:1-193 K:1-171 L:1-106 [EXB/SNP][EXE/SNP]
-	52672-82251		DECAL,BATTERY	ﾃﾞｶﾙ	3	A,B,C,D,E,H,J F:1-691 G:1-193 K:1-171 L:1-106 [EXB/FNP][EXE/FNP]
-	522A3-82501		DECAL,BATTERY	ﾃﾞｶﾙ	3	[EXE/TNP]
-	522A3-83101		DECAL,BATTERY	ﾃﾞｶﾙ	3	[EXE/ONP]
-	522A3-83301		DECAL,BATTERY	ﾃﾞｶﾙ	3	[EXE/DNP][EXN/DNP]
-	522A3-83501		DECAL,BATTERY	ﾃﾞｶﾙ	3	[EXE/INP]
-	522A3-83701		DECAL,BATTERY	ﾃﾞｶﾙ	3	[EXE/GNP]
-	522A3-83901		DECAL,BATTERY	ﾃﾞｶﾙ	3	[EXE/PNP]
-	529F3-82021		DECAL,BATTERY	ﾃﾞｶﾙ	3	[EXN/FINP]
-	529F3-82031		DECAL,BATTERY	ﾃﾞｶﾙ	3	[EXN/SENP]
-	225N9-12031		DECAL,BATTERY	ﾃﾞｶﾙ	3	[EXB/RNP]
-	516G2-82071		DECAL,BATTERY	ﾃﾞｶﾙ	1	A,B,C,D,E,F:815- G:215- H,J,K:218- L:108- [EXB/ENP][EXK/ENP]
17	53652-82551		DECAL,CAUTION	ﾃﾞｶﾙ	1	[EXB/CNP]
18	22859-12033		PLATE,CAUTION	ﾌﾟﾚｰﾄ	1	B,D,F:1-814 G:1-214 H,J,K:1-217 L:1-107 [EXA/ENP]

FIG.138 DECAL [EXA,EXB,EXC,EXE,EXK,EXN]

(F4049120) デカル

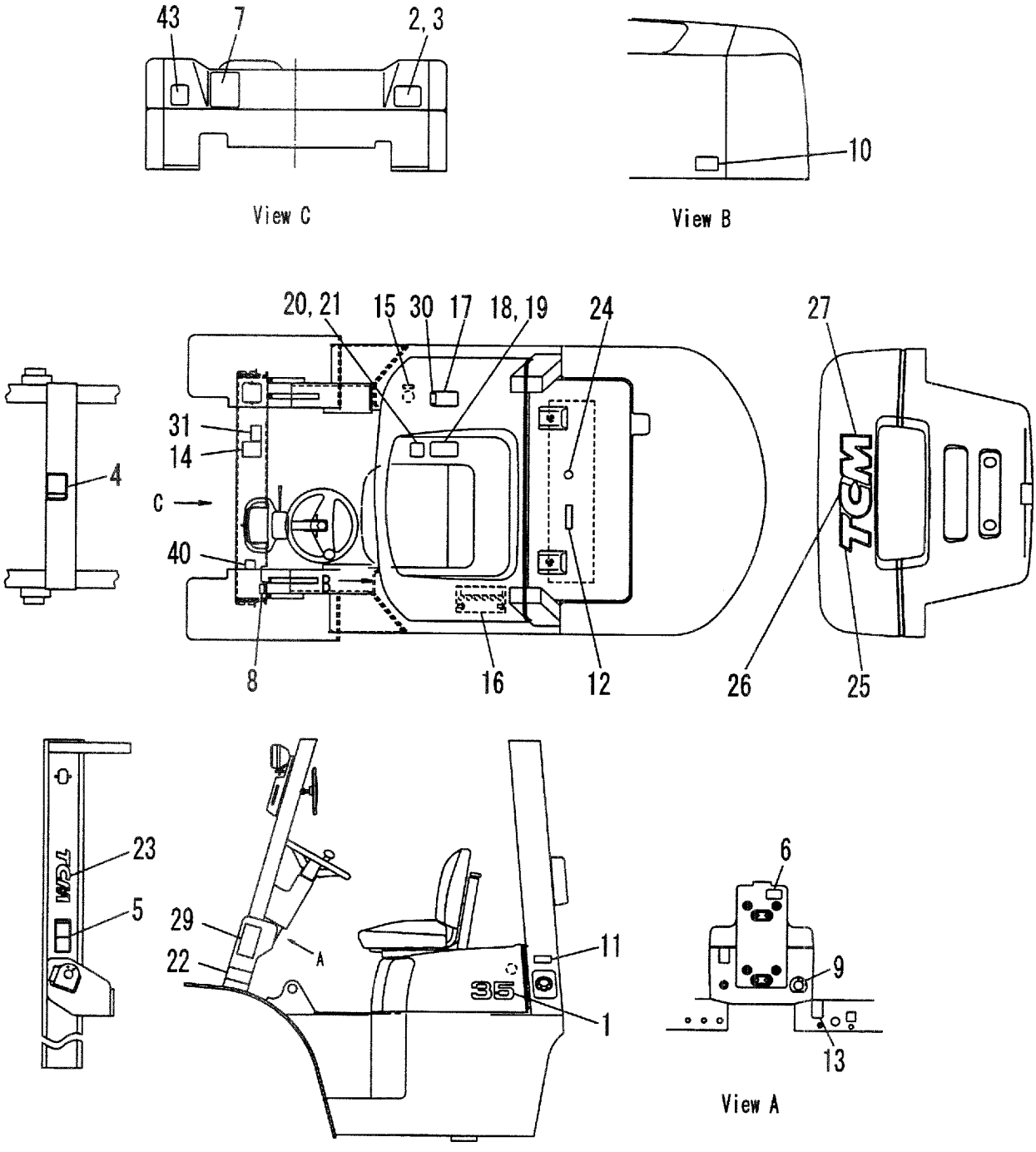

A:FD35C8 D:FD40T8 G:FD50T8 K:FG45T8
B:FD35T8 E:FD45C8 H:FG35T8 L:FG50T8
C:FD40C8 F:FD45T8 J:FG40T8

FIG.138
(F4049120)

Item No	Part No.	Mark	Description	Req'd	Remarks : Serial No.
-	212T9-12031		PLATE,CAUTION ﾌﾟﾚｰﾄ	1	B,D,F:815- G:215- H,J,K:218- L:108- [EXA/ENP]
-	22859-12033		PLATE,CAUTION ﾌﾟﾚｰﾄ	1	A,B,C,D,E,F:1-814 G:1-214 H,J,K:1-217 L:1-107 [EXB/ENP][EXC/ENP] [EXE/ENP][EXK/ENP] [EXN/ENP]
-	516G3-82801		PLATE,CAUTION ﾌﾟﾚｰﾄ	1	A,B,C,D,E,F:815- G:215- H,J,K:218- L:108- [EXB/ENP][EXC/ENP] [EXE/ENP][EXK/ENP] [EXN/ENP]
-	27029-12202		PLATE,CAUTION ﾌﾟﾚｰﾄ	1	A,B,C,D,E,F:815- G:215- H,J,K:218- L:108- [EXB/ENP][EXK/ENP]
-	53652-82372		PLATE,CAUTION ﾌﾟﾚｰﾄ	1	A,B,C,D,E,F:1-814 G:1-214 H,J,K:1-217 L:1-107 [EXB/SNP][EXE/SNP]
-	516G3-82821		PLATE,CAUTION ﾌﾟﾚｰﾄ	1	A,B,C,D,E,F:815- G:215- H,J,K:218- L:108- [EXB/SNP][EXE/SNP]
-	53652-82373		PLATE,CAUTION ﾌﾟﾚｰﾄ	1	A,B,C,D,E,F:815- G:215- H,J,K:218- L:108- [EXB/SNP]
-	53652-82032		PLATE,CAUTION ﾌﾟﾚｰﾄ	1	A,B,C,D,E,F:1-814 G:1-214 H,J,K:1-217 L:1-107 [EXB/FNP][EXE/FNP]
-	516G3-82831		PLATE,CAUTION ﾌﾟﾚｰﾄ	1	A,B,C,D,E,F:815- G:215- H,J,K:218- L:108- [EXB/FNP][EXE/FNP]

FIG.138 DECAL [EXA,EXB,EXC,EXE,EXK,EXN]

(F4049120) デカル

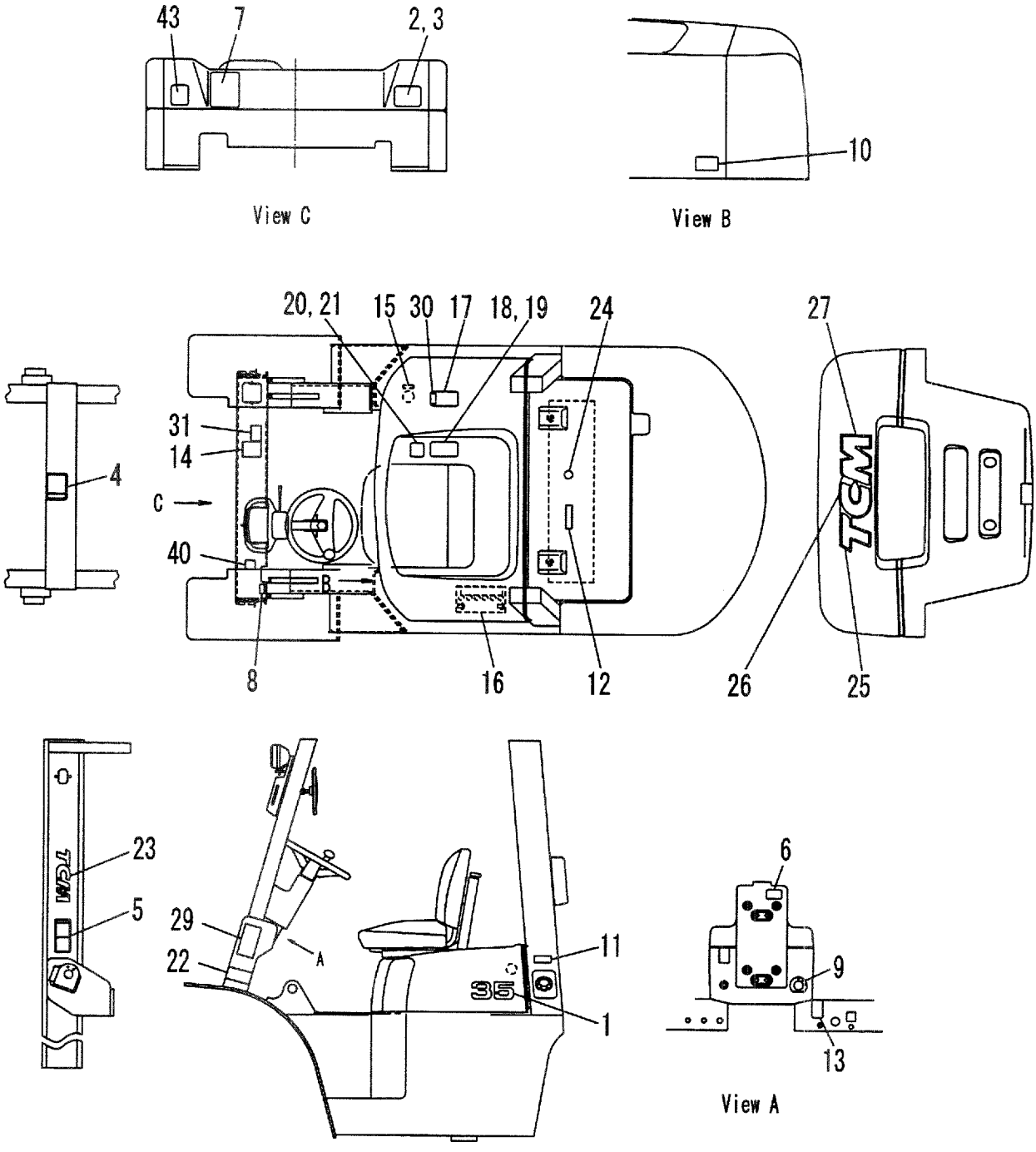

A:FD35C8 D:FD40T8 G:FD50T8 K:FG45T8
B:FD35T8 E:FD45C8 H:FG35T8 L:FG50T8
C:FD40C8 F:FD45T8 J:FG40T8

FIG.138
(F4049120)

Item No	Part No.	Mark	Description	Req'd	Remarks : Serial No.
-	53652-82033		PLATE,CAUTION ﾌﾟﾚｰﾄ	1	A,B,C,D,E,F:815- G:215- H,J,K:218- L:108- [EXB/FNP]
-	522A3-82491		PLATE,CAUTION ﾌﾟﾚｰﾄ	1	A,B,C,D,E,F:1-814 G:1-214 H,J,K:1-217 L:1-107 [EXE/TNP]
-	516G3-82811		PLATE,CAUTION ﾌﾟﾚｰﾄ	1	A,B,C,D,E,F:815- G:215- H,J,K:218- L:108- [EXE/TNP]
-	522A3-83091		PLATE,CAUTION ﾌﾟﾚｰﾄ	1	A,B,C,D,E,F:1-814 G:1-214 H,J,K:1-217 L:1-107 [EXE/ONP]
-	516G3-82841		PLATE,CAUTION ﾌﾟﾚｰﾄ	1	A,B,C,D,E,F:815- G:215- H,J,K:218- L:108- [EXE/ONP]
-	522A3-83291		PLATE,CAUTION ﾌﾟﾚｰﾄ	1	A,B,C,D,E,F:1-814 G:1-214 H,J,K:1-217 L:1-107 [EXE/DNP]
-	516G3-82851		PLATE,CAUTION ﾌﾟﾚｰﾄ	1	A,B,C,D,E,F:815- G:215- H,J,K:218- L:108- [EXE/DNP]
-	522A3-83491		PLATE,CAUTION ﾌﾟﾚｰﾄ	1	A,B,C,D,E,F:1-814 G:1-214 H,J,K:1-217 L:1-107 [EXE/INP]
-	516G3-82861		PLATE,CAUTION ﾌﾟﾚｰﾄ	1	A,B,C,D,E,F:815- G:215- H,J,K:218- L:108- [EXE/INP]
-	522A3-83691		PLATE,CAUTION ﾌﾟﾚｰﾄ	1	A,B,C,D,E,F:1-814 G:1-214 H,J,K:1-217 L:1-107 [EXE/GNP]

FIG.138 DECAL [EXA,EXB,EXC,EXE,EXK,EXN]

(F4049120) デカル

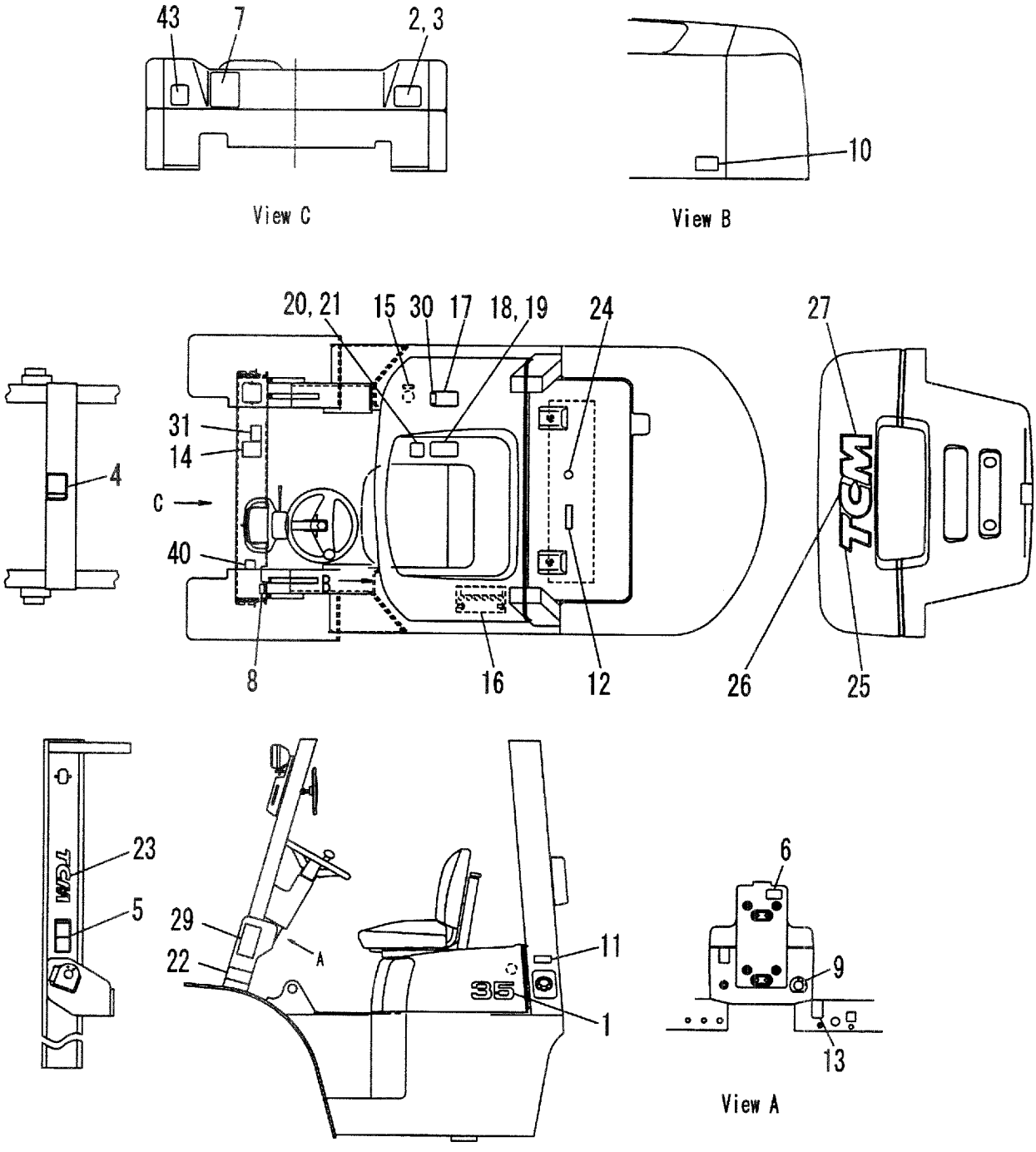

FIG.138
(F4049120)

Item No	Part No.	Mark	Description	Req'd	Remarks : Serial No.
-	516G3-82871		PLATE,CAUTION ﾌﾟﾚｰﾄ	1	A,B,C,D,E,F:815- G:215- H,J,K:218- L:108- [EXE/GNP]
-	522A3-83891		PLATE,CAUTION ﾌﾟﾚｰﾄ	1	A,B,C,D,E,F:1-814 G:1-214 H,J,K:1-217 L:1-107 [EXE/PNP]
-	516G3-82881		PLATE,CAUTION ﾌﾟﾚｰﾄ	1	A,B,C,D,E,F:815- G:215- H,J,K:218- L:108- [EXE/PNP]
-	52672-82072		PLATE,CAUTION ﾌﾟﾚｰﾄ	1	A,B,C,D,E,F:1-814 G:1-214 H,J,K:1-217 L:1-107 [EXB/CNP]
-	516G3-82073		PLATE,CAUTION ﾌﾟﾚｰﾄ	1	A,B,C,D,E,F:815- G:215- H,J,K:218- L:108- [EXB/CNP]
-	529F3-82201		PLATE,CAUTION ﾌﾟﾚｰﾄ	1	A,B,C,D,E,F:1-814 G:1-214 H,J,K:1-217 L:1-107 [EXN/FINP]
-	516G3-82901		PLATE,CAUTION ﾌﾟﾚｰﾄ	1	A,B,C,D,E,F:815- G:215- H,J,K:218- L:108- [EXN/FINP]
-	529F3-82221		PLATE,CAUTION ﾌﾟﾚｰﾄ	1	A,B,C,D,E,F:1-814 G:1-214 H,J,K:1-217 L:1-107 [EXN/SENP]
-	516G3-82891		PLATE,CAUTION ﾌﾟﾚｰﾄ	1	A,B,C,D,E,F:815- G:215- H,J,K:218- L:108- [EXN/SENP]
-	225R9-12051		PLATE,CAUTION ﾌﾟﾚｰﾄ	1	[EXB/RNP]

FIG.138 DECAL [EXA,EXB,EXC,EXE,EXK,EXN]

(F4049120) デカル

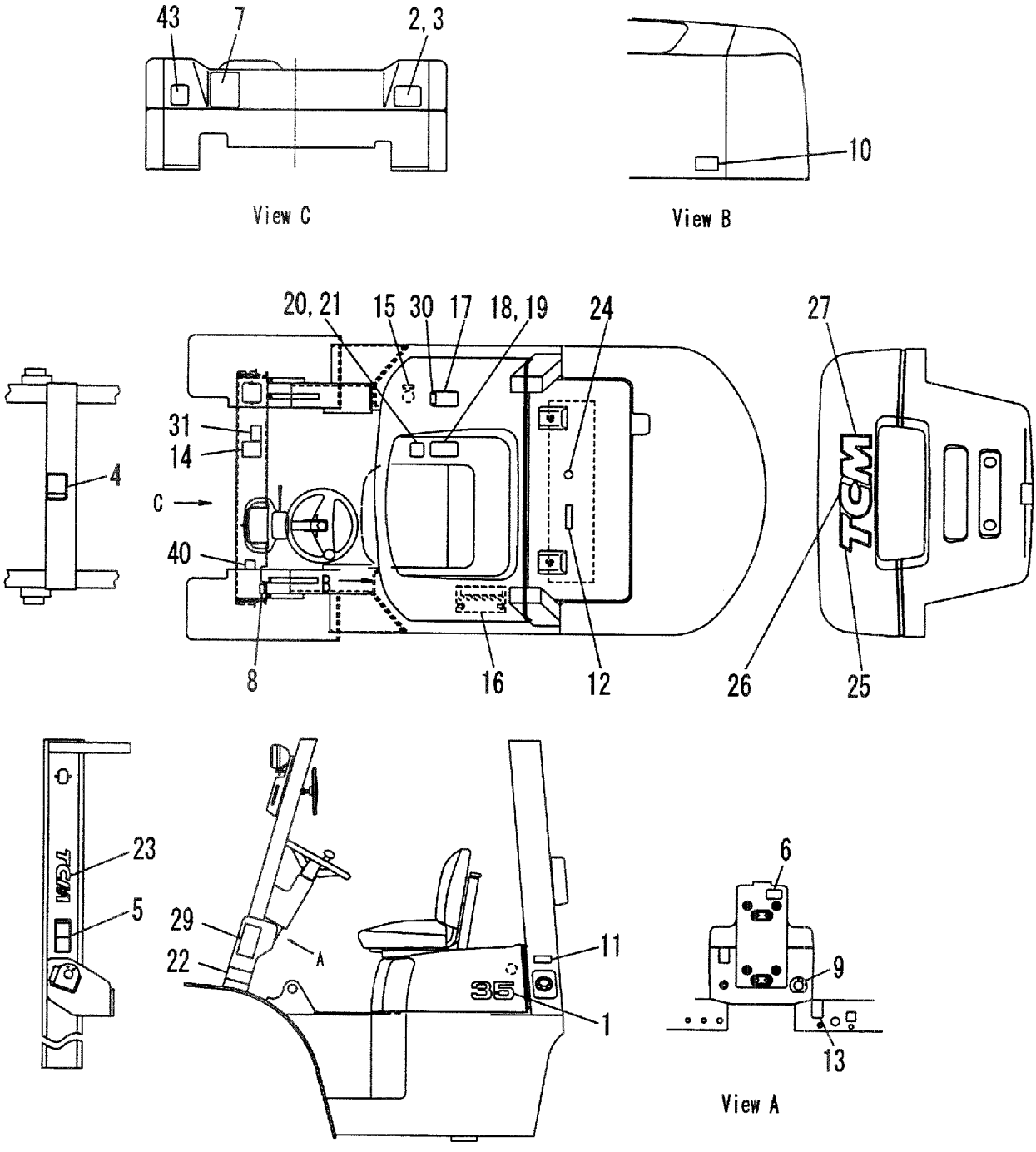

FIG.138
(F4049120)

Item No	Part No.	Mark	Description	Req'd	Remarks : Serial No.
19	02432-01008		RIVET リベット	4	A,B,C,D,E,F:1-814 G:1-214 H,J,K:1-217 L:1-107 [EXA][EXB][EXC][EXE][EXK] [EXN]
20	514A3-82301		PLATE,CAPACITY,CHART プレート	1	[EXE/ENP][EXN/ENP]
-	514A3-82331		PLATE,CAPACITY,CHART プレート	1	[EXB/SNP][EXE/SNP]
-	514A3-82341		PLATE,CAPACITY,CHART プレート	1	[EXB/FNP][EXE/FNP]
-	514A3-82321		PLATE,CAPACITY,CHART プレート	1	[EXE/TNP]
-	514A3-82351		PLATE,CAPACITY,CHART プレート	1	[EXE/ONP]
-	514A3-82361		PLATE,CAPACITY,CHART プレート	1	[EXE/DNP][EXN/DNP]
-	514A3-82371		PLATE,CAPACITY,CHART プレート	1	[EXE/INP]
-	514A3-82381		PLATE,CAPACITY,CHART プレート	1	[EXE/GNP]
-	514A3-82391		PLATE,CAPACITY,CHART プレート	1	[EXE/PNP]
-	529F3-82101		PLATE,CAPACITY,CHART プレート	1	[EXN/FINP]
-	529F3-82111		PLATE,CAPACITY,CHART プレート	1	[EXN/SENP]
-	524T2-82071		PLATE,CAPACITY,CHART プレート	1	A,B,H [(EXB,ENP)/-VM500] [(EXK,ENP)/-VM500]
-	524T2-82071		PLATE,CAPACITY,CHART プレート	1	H [(EXB,ENP)/-VM500]
-	524T2-82081		PLATE,CAPACITY,CHART プレート	1	A,B,H [(EXB,ENP)/VM550-600] [(EXK,ENP)/VM550-600]
-	524T2-82081		PLATE,CAPACITY,CHART プレート	1	H [(EXB,ENP)/VM550-600]
-	524W2-82071		PLATE,CAPACITY,CHART プレート	1	C,D [(EXB,ENP)/-VM500] [(EXK,ENP)/-VM500]
-	524W2-82071		PLATE,CAPACITY,CHART プレート	1	J [(EXB,ENP)/-VM500]
-	524W2-82081		PLATE,CAPACITY,CHART プレート	1	C,D [(EXB,ENP)/VM550-600] [(EXK,ENP)/VM550-600]
-	524W2-82081		PLATE,CAPACITY,CHART プレート	1	J [(EXB,ENP)/VM550-600]
-	528C2-82071		PLATE,CAPACITY,CHART プレート	1	E,F [(EXB,ENP)/-VM500] [(EXK,ENP)/-VM500]
-	528C2-82071		PLATE,CAPACITY,CHART プレート	1	K [(EXB,ENP)/-VM500]
-	528C2-82081		PLATE,CAPACITY,CHART プレート	1	E,F [(EXB,ENP)/VM550-600] [(EXK,ENP)/VM550-600]
-	528C2-82081		PLATE,CAPACITY,CHART プレート	1	K [(EXB,ENP)/VM550-600]
-	535H2-82071		PLATE,CAPACITY,CHART プレート	1	G [(EXB,ENP)/-VM500] [(EXK,ENP)/-VM500]

FIG.138 DECAL [EXA,EXB,EXC,EXE,EXK,EXN]

(F4049120) デカル

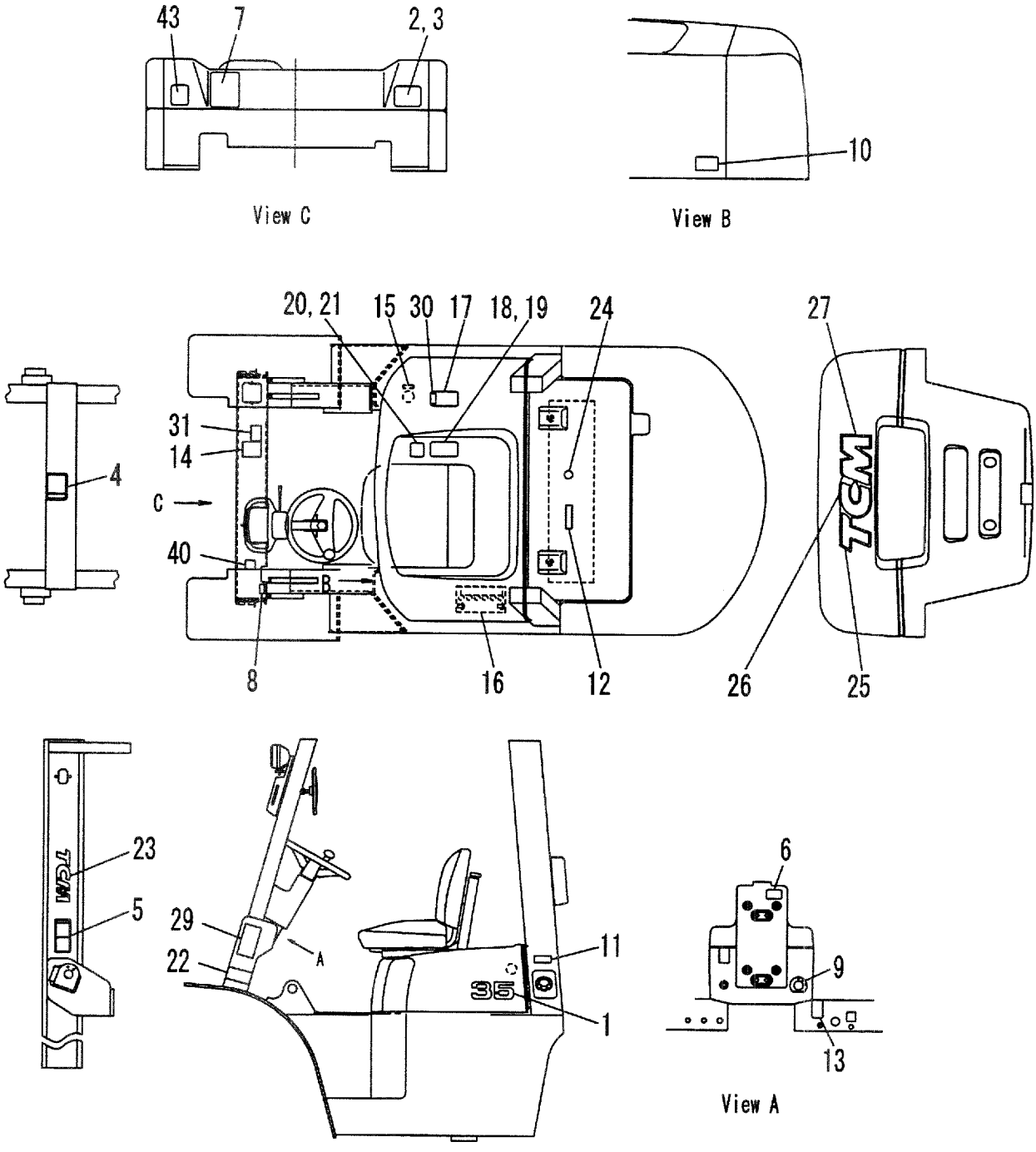

A:FD35C8 D:FD40T8 G:FD50T8 K:FG45T8
B:FD35T8 E:FD45C8 H:FG35T8 L:FG50T8
C:FD40C8 F:FD45T8 J:FG40T8

FIG.138
(F4049120)

Item No	Part No.	Mark	Description	Req'd	Remarks : Serial No.
-	535H2-82071		PLATE,CAPACITY,CHART ﾌﾟﾚｰﾄ	1	L [(EXB,ENP)/-VM500]
-	535H2-82081		PLATE,CAPACITY,CHART ﾌﾟﾚｰﾄ	1	G [(EXB,ENP)/VM550-600] [(EXK,ENP)/VM550-600]
-	535H2-82081		PLATE,CAPACITY,CHART ﾌﾟﾚｰﾄ	1	L [(EXB,ENP)/VM550-600]
-	224T9-12201		PLATE,CAPACITY,CHART ﾌﾟﾚｰﾄ	1	A,B,H [(EXC,ENP)/-VM500]
-	224T9-12211		PLATE,CAPACITY,CHART ﾌﾟﾚｰﾄ	1	A,B,H [(EXC,ENP)/VM550-600]
-	222W9-12201		PLATE,CAPACITY,CHART ﾌﾟﾚｰﾄ	1	C,D,J [(EXC,ENP)/-VM500]
-	222W9-12211		PLATE,CAPACITY,CHART ﾌﾟﾚｰﾄ	1	C,D,J [(EXC,ENP)/VM550-600]
-	228C9-12201		PLATE,CAPACITY,CHART ﾌﾟﾚｰﾄ	1	E,F,K [(EXC,ENP)/-VM500]
-	228C9-12211		PLATE,CAPACITY,CHART ﾌﾟﾚｰﾄ	1	E,F,K [(EXC,ENP)/VM550-600]
-	235H9-12201		PLATE,CAPACITY,CHART ﾌﾟﾚｰﾄ	1	G,L [(EXC,ENP)/-VM500]
-	235H9-12211		PLATE,CAPACITY,CHART ﾌﾟﾚｰﾄ	1	G,L [(EXC,ENP)/VM550-600]
-	524T2-82011		PLATE,CAPACITY,CHART ﾌﾟﾚｰﾄ	1	A,B,H [(EXB/CNP)/-VM500]
-	524T2-82041		PLATE,CAPACITY,CHART ﾌﾟﾚｰﾄ	1	A,B,H [(EXB/CNP)/VM550-600]
-	524W2-82011		PLATE,CAPACITY,CHART ﾌﾟﾚｰﾄ	1	C,D,J [(EXB/CNP)/-VM500]
-	524W2-82041		PLATE,CAPACITY,CHART ﾌﾟﾚｰﾄ	1	C,D,J [(EXB/CNP)/VM550-600]
-	528C2-82011		PLATE,CAPACITY,CHART ﾌﾟﾚｰﾄ	1	E,F,K [(EXB/CNP)/-VM500]
-	528C2-82041		PLATE,CAPACITY,CHART ﾌﾟﾚｰﾄ	1	E,F,K [(EXB/CNP)/VM550-600]
-	535H2-82011		PLATE,CAPACITY,CHART ﾌﾟﾚｰﾄ	1	G,L [(EXB/CNP)/-VM500]
-	535H2-82041		PLATE,CAPACITY,CHART ﾌﾟﾚｰﾄ	1	G,L [(EXB/CNP)/VM550-600]
-	524T2-72301		PLATE,CAPACITY,CHART ﾌﾟﾚｰﾄ	1	B,H [(EXA,ENP)/-VM500]
-	524T2-72311		PLATE,CAPACITY,CHART ﾌﾟﾚｰﾄ	1	B,H [(EXA,ENP)/VM550-600]
-	524W2-72301		PLATE,CAPACITY,CHART ﾌﾟﾚｰﾄ	1	D,J [(EXA,ENP)/-VM500]
-	524W2-72311		PLATE,CAPACITY,CHART ﾌﾟﾚｰﾄ	1	D,J [(EXA,ENP)/VM550-600]
-	528C2-72301		PLATE,CAPACITY,CHART ﾌﾟﾚｰﾄ	1	F,K [(EXA,ENP)/-VM500]

FIG.138 DECAL [EXA,EXB,EXC,EXE,EXK,EXN]

(F4049120) デカル

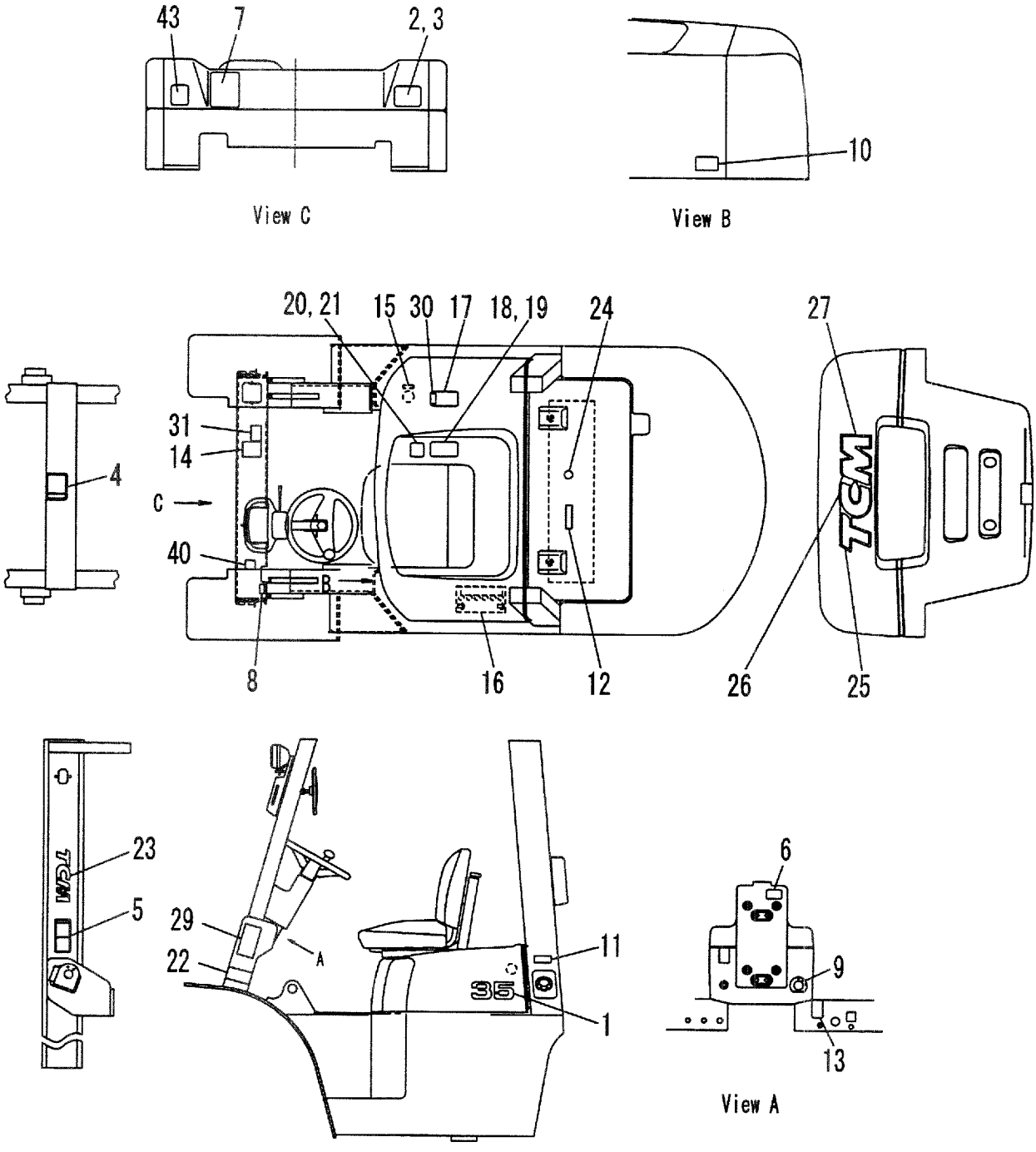

A:FD35C8 D:FD40T8 G:FD50T8 K:FG45T8
B:FD35T8 E:FD45C8 H:FG35T8 L:FG50T8
C:FD40C8 F:FD45T8 J:FG40T8

FIG.138
(F4049120)

Item No	Part No.	Mark	Description	Req'd	Remarks : Serial No.
-	528C2-72311		PLATE,CAPACITY,CHART プレート	1	F,K [(EXA,ENP)/VM550-600]
-	535H2-72101		PLATE,CAPACITY,CHART プレート	1	G,L [(EXA,ENP)/-VM500]
-	535H2-72111		PLATE,CAPACITY,CHART プレート	1	G,L [(EXA,ENP)/VM550-600]
-	63110-18911		PLATE,CAPACITY,CHART プレート	1	[EXA/VFM24X][EXA/VFM28E]
21	02432-01008		RIVET リベット	4	[EXA][EXB][EXC][EXE][EXK] [EXN]
22	224W9-12071		DECAL,AIR,PRESSURE,T デカル	1	A,B,C,D,H,J [EXA][EXB][EXC][EXE][EXK] [EXN]
-	228E9-12111		DECAL,AIR,PRESSURE,T デカル	1	E,F,G,K,L [EXA][EXB][EXC][EXE][EXK] [EXN]
-	524W2-72161		DECAL,AIR,PRESSURE,T デカル	1	B,D,H,J [EXA]
-	528C2-72161		DECAL,AIR,PRESSURE,T デカル	1	F,G,K,L [EXA]
23	273A9-12242		DECAL,MAST デカル	2	[EXA][EXB][EXC][EXE][EXK] [EXN]
24	23659-12101		DECAL,LONG,LIFE,COOL デカル	1	[EXA/ENP][EXB/ENP] [EXC/ENP][EXE/ENP]
-	23659-12101		DECAL,LONG,LIFE,COOL デカル	1	[EXK/ENP][EXN/ENP] [EXB/CNP]
-	522A3-82641		DECAL,LONG,LIFE,COOL デカル	1	[EXB/SNP][EXE/SNP]
-	522A3-82841		DECAL,LONG,LIFE,COOL デカル	1	[EXB/FNP][EXE/FNP]
-	522A3-82441		DECAL,LONG,LIFE,COOL デカル	1	[EXE/TNP]
-	522A3-83041		DECAL,LONG,LIFE,COOL デカル	1	[EXE/ONP]
-	522A3-83241		DECAL,LONG,LIFE,COOL デカル	1	[EXE/DNP][EXN/DNP]
-	522A3-83441		DECAL,LONG,LIFE,COOL デカル	1	[EXE/INP]
-	522A3-83641		DECAL,LONG,LIFE,COOL デカル	1	[EXE/GNP]
-	522A3-83841		DECAL,LONG,LIFE,COOL デカル	1	[EXE/PNP]
-	529F3-82081		DECAL,LONG,LIFE,COOL デカル	1	[EXN/FINP]
-	529F3-82091		DECAL,LONG,LIFE,COOL デカル	1	[EXN/SENP]
-	232W9-12051		DECAL,LONG,LIFE,COOL デカル	1	[EXB/RNP]
25	235C9-12021		DECAL,BALANCE,WEIGHT デカル	1	[EXA][EXB][EXC][EXE][EXK] [EXN]
26	235C9-12031		DECAL,BALANCE,WEIGHT デカル	1	[EXA][EXB][EXC][EXE][EXK] [EXN]
27	235C9-12041		DECAL,BALANCE,WEIGHT デカル	1	[EXA][EXB][EXC][EXE][EXK] [EXN]
28	55592-82001	+	DECAL,CERTIFICATE デカル	1	A,B,C,D,E,F,G [EXB][EXC][EXK]
29	516G2-72711		DECAL,CAUTION,TIRE デカル	1	[EXA/ENP][EXB/ENP] [EXC/ENP][EXK/ENP] [EXN/ENP]
-	514A2-71001		DECAL,CAUTION,TIRE デカル	1	B,D,F,G,H,J,K,L [EXA/ENP]
-	516G2-82061		DECAL,CAUTION,TIRE デカル	1	[EXB/CNP]

FIG.138 DECAL [EXA,EXB,EXC,EXE,EXK,EXN]

(F4049120) デカル

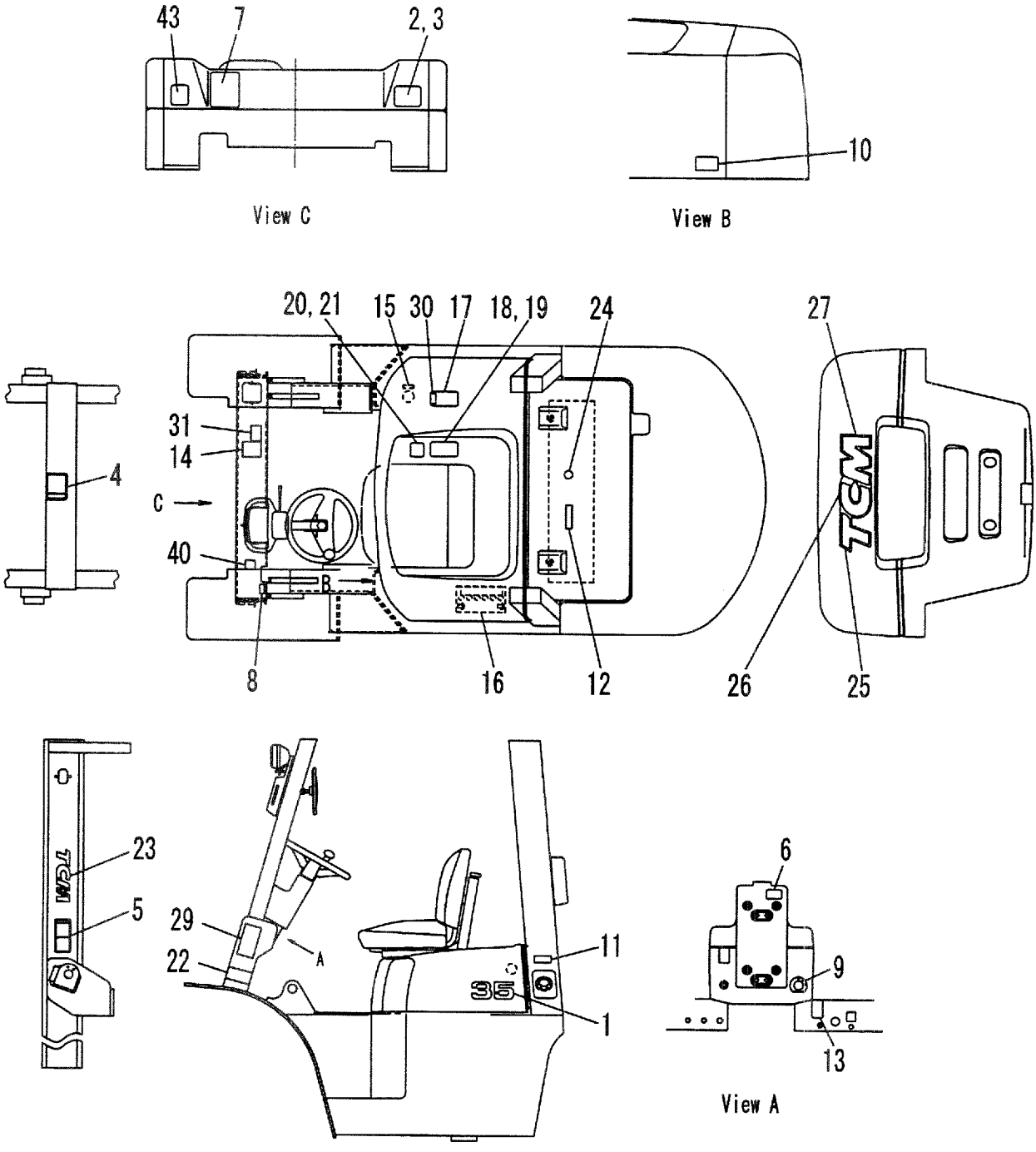

A:FD35C8 D:FD40T8 G:FD50T8 K:FG45T8
B:FD35T8 E:FD45C8 H:FG35T8 L:FG50T8
C:FD40C8 F:FD45T8 J:FG40T8

FIG.138
(F4049120)

Item No	Part No.	Mark	Description	Req'd	Remarks : Serial No.
-	516G3-82211		DECAL,CAUTION,TIRE デカル	1	[EXB/SNP][EXE/SNP]
-	516G3-82221		DECAL,CAUTION,TIRE デカル	1	[EXB/FNP][EXE/FNP]
-	516G3-82201		DECAL,CAUTION,TIRE デカル	1	[EXE/TNP]
-	516G3-82231		DECAL,CAUTION,TIRE デカル	1	[EXE/ONP]
-	516G3-82241		DECAL,CAUTION,TIRE デカル	1	[EXE/DNP][EXN/DNP]
-	516G3-82251		DECAL,CAUTION,TIRE デカル	1	[EXE/INP]
-	516G3-82261		DECAL,CAUTION,TIRE デカル	1	[EXE/GNP]
-	516G3-82271		DECAL,CAUTION,TIRE デカル	1	[EXE/PNP]
-	232W9-12021		DECAL,CAUTION,TIRE デカル	1	[EXB/RNP]
-	516G3-82281		DECAL,CAUTION,TIRE デカル	1	[EXN/FINP]
-	516G3-82291		DECAL,CAUTION,TIRE デカル	1	[EXN/SENP]
30	23329-12051		DECAL,GUARD,OVERHEAD デカル	1	B,D,F,G,H,J,K,L [EXA/ENP]
31	534A2-72701		DECAL,WARNING デカル	1	B,D,F,G [EXA/ENP]
32	514A2-71021	+	DECAL,CAUTION-SEAT デカル	1	B,D,F,G,H,J,K,L [EXA/ENP]
33	513A2-72201	+	DECAL,LPG デカル	1	H,J,K,L [EXA/ENP]
34	214A8-02701	+	DECAL,MAST-WARNING,A デカル	2	B,D,F,G,H,J,K,L [EXA/VM250-600] [EXA/VFM250-600]
-	214A8-02701	+	DECAL,MAST-WARNING,A デカル	2	B,D,F,G,H,J,K,L [EXA/VFHM360-800]
35	214A8-02711	+	DECAL,MAST-WARNING,B デカル	2	B,D,F,G,H,J,K,L [EXA/VM250-375] [EXA/VFM250-375]
-	214A8-02711	+	DECAL,MAST-WARNING,B デカル	2	B,D,F,G,H,J,K,L [EXA/VFHM360-550]
-	214A8-02711	+	DECAL,MAST-WARNING,B デカル	3	B,D,F,G,H,J,K,L [EXA/VM400-550] [EXA/VFM400-550]
-	214A8-02711	+	DECAL,MAST-WARNING,B デカル	3	B,D,F,G,H,J,K,L [EXA/VFHM600-700]
-	214A8-02711	+	DECAL,MAST-WARNING,B デカル	4	B,D,F,G,H,J,K,L [EXA/VM600][EXA/VFM600] [EXA/VFHM750][EXA/VFHM800]
36	214A8-02721	+	DECAL,MAST-WARNING,C デカル	2	B,D,F,G,H,J,K,L [EXA/VM250-375] [EXA/VFM250-375]
-	214A8-02721	+	DECAL,MAST-WARNING,C デカル	2	B,D,F,G,H,J,K,L [EXA/VFHM360-550]
-	214A8-02721	+	DECAL,MAST-WARNING,C デカル	3	B,D,F,G,H,J,K,L [EXA/VM400-550] [EXA/VFM400-550]
-	214A8-02721	+	DECAL,MAST-WARNING,C デカル	3	B,D,F,G,H,J,K,L [EXA/VFHM600-700]
-	214A8-02721	+	DECAL,MAST-WARNING,C デカル	4	B,D,F,G,H,J,K,L [EXA/VM600][EXA/VFM600] [EXA/VFHM750][EXA/VFHM800]

FIG.138 DECAL [EXA,EXB,EXC,EXE,EXK,EXN]

(F4049120) デカル

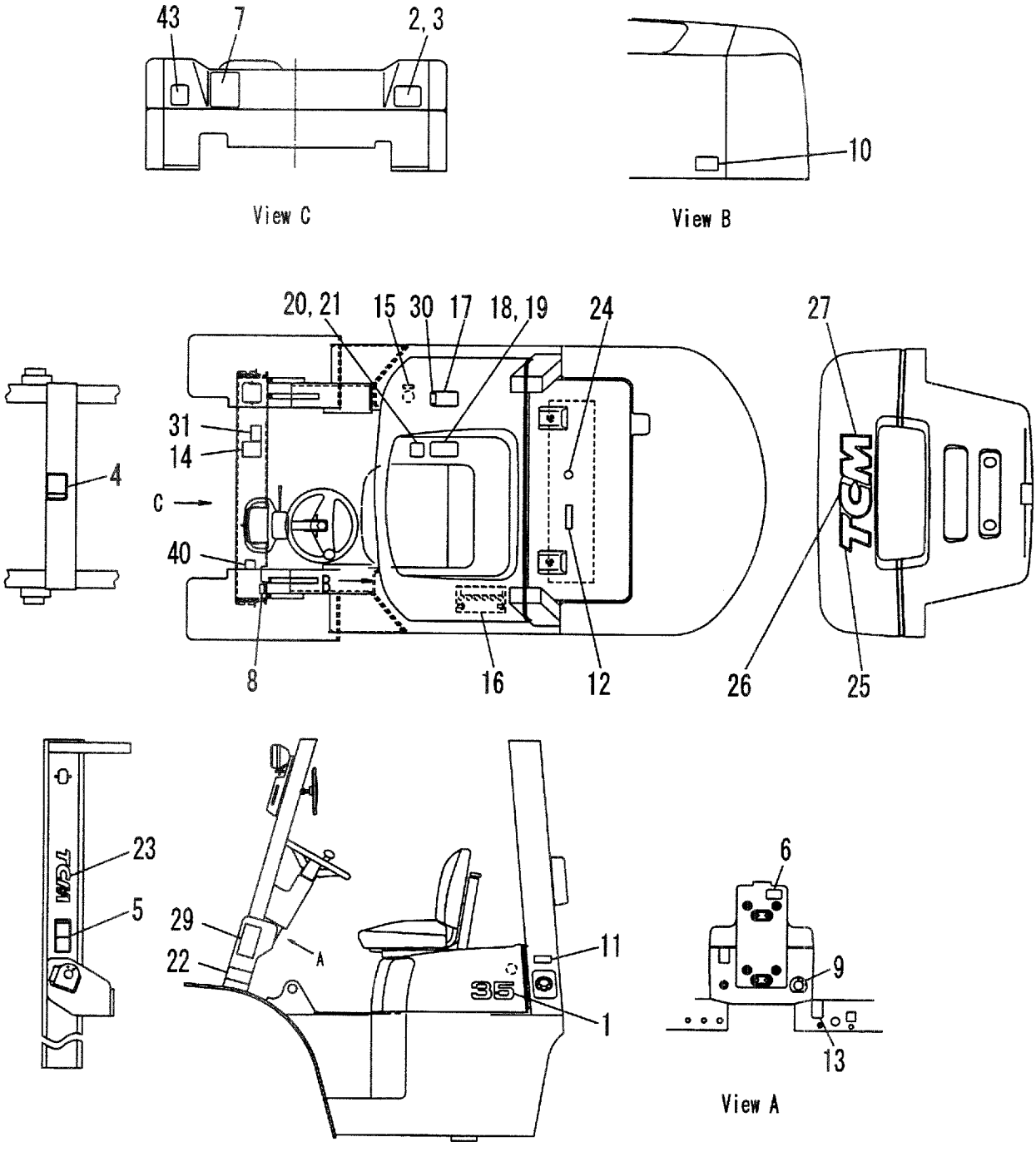

A:FD35C8 D:FD40T8 G:FD50T8 K:FG45T8
B:FD35T8 E:FD45C8 H:FG35T8 L:FG50T8
C:FD40C8 F:FD45T8 J:FG40T8

FIG.138
(F4049120)

Item No	Part No.	Mark	Description		Req'd	Remarks : Serial No.
37	532A2-72731	+	PLATE,UL	ﾌﾟﾚｰﾄ	1	B,D,F,G [EXA]
-	516G2-72731	+	PLATE,UL	ﾌﾟﾚｰﾄ	1	H,J,K,L [EXA]
38	216G9-12131	+	RIVET	ﾘﾍﾞｯﾄ	4	B,D,F,G,H,J,K,L [EXA]
39	514A2-82001	+	DECAL,FUEL-CAP	ﾃﾞｶﾙ	1	A,B,C,D,E,H,J [EXE/ONP]
40	535H3-82411		DECAL,CAUTION CREEP	ﾃﾞｶﾙ	1	F:692- G:194- K:172- L:107- [EXE/ENP][EXK/ENP] [EXN/ENP]
-	535H3-82421		DECAL,CAUTION CREEP	ﾃﾞｶﾙ	1	F:692- G:194- K:172- L:107- [EXB/SNP][EXE/SNP]
-	535H3-82431		DECAL,CAUTION CREEP	ﾃﾞｶﾙ	1	F:692- G:194- K:172- L:107- [EXB/FNP][EXE/FNP]
-	535H3-82441		DECAL,CAUTION CREEP	ﾃﾞｶﾙ	1	F:692- G:194- K:172- L:107- [EXE/TNP]
-	535H3-82451		DECAL,CAUTION CREEP	ﾃﾞｶﾙ	1	F:692- G:194- K:172- L:107- [EXE/ONP]
-	535H3-82461		DECAL,CAUTION CREEP	ﾃﾞｶﾙ	1	F:692- G:194- K:172- L:107- [EXE/DNP][EXN/DNP]
-	535H3-82471		DECAL,CAUTION CREEP	ﾃﾞｶﾙ	1	F:692- G:194- K:172- L:107- [EXE/INP]
-	535H3-82481		DECAL,CAUTION CREEP	ﾃﾞｶﾙ	1	F:692- G:194- K:172- L:107- [EXE/GNP]

FIG.138 DECAL [EXA,EXB,EXC,EXE,EXK,EXN]

(F4049120) デカル

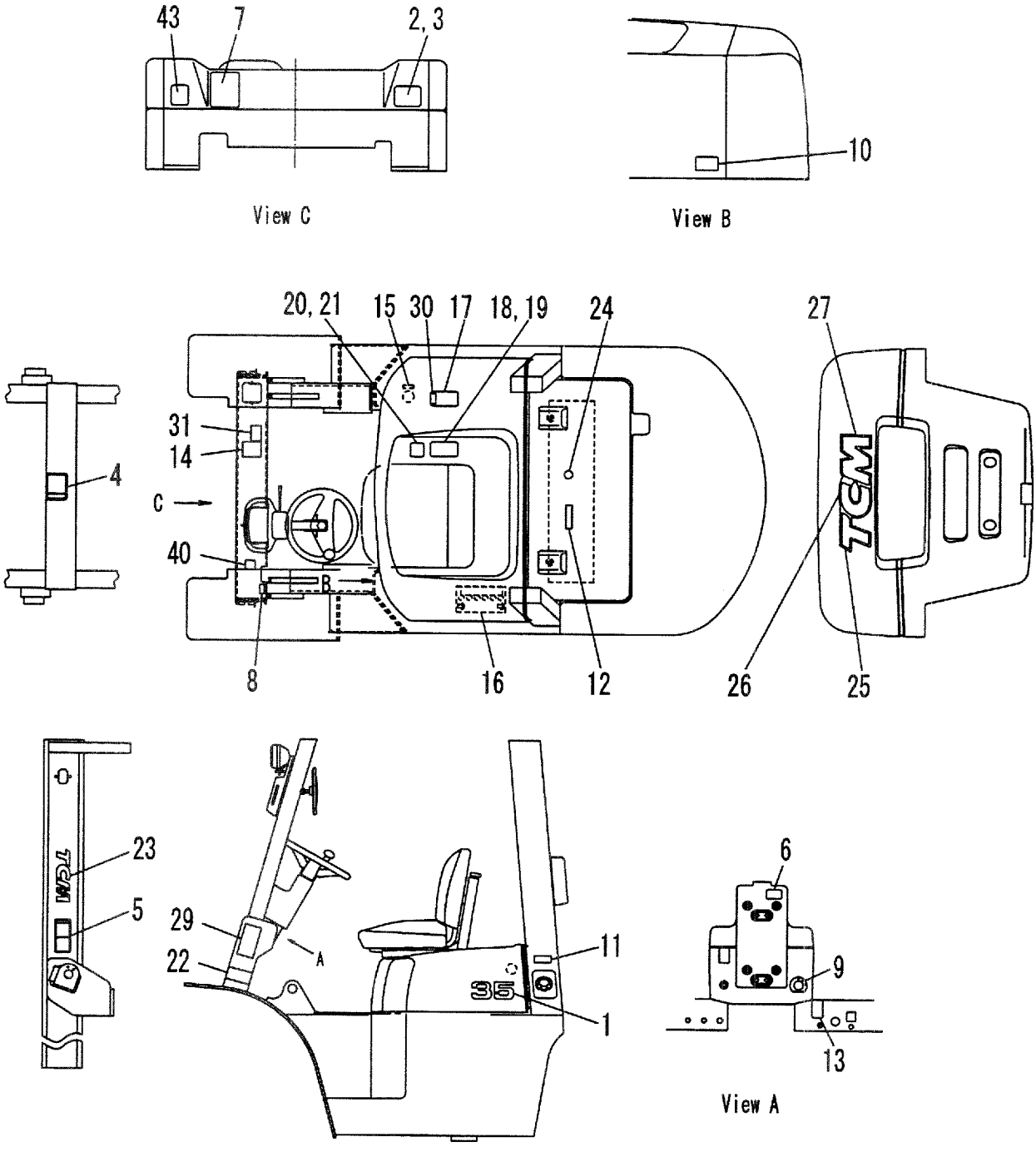

FIG.138
(F4049120)

Item No	Part No.	Mark	Description	Req'd	Remarks : Serial No.
-	535H3-82491		DECAL,CAUTION CREEP デカル	1	F:692- G:194- K:172- L:107- [EXE/PNP]
-	535H3-82511		DECAL,CAUTION CREEP デカル	1	F:692- G:194- K:172- L:107- [EXN/SENP]
-	535H3-82501		DECAL,CAUTION CREEP デカル	1	F:692- G:194- K:172- L:107- [EXN/FINP]
41	534A3-82311	+	DECAL,BATTERY A デカル	1	F:692- G:194- K:172- L:107- [EXE/ENP][EXK/ENP] [EXN/ENP]
-	534A3-82331	+	DECAL,BATTERY A デカル	1	F:692- G:194- K:172- L:107- [EXB/SNP][EXE/SNP]
-	534A3-82341	+	DECAL,BATTERY A デカル	1	F:692- G:194- K:172- L:107- [EXB/FNP][EXE/FNP]
42	534A3-82421	+	DECAL,BATTERY B デカル	1	F:692- G:194- K:172- L:107- [EXE/ENP][EXK/ENP] [EXN/ENP]
-	534A3-82441	+	DECAL,BATTERY B デカル	1	F:692- G:194- K:172- L:107- [EXB/SNP][EXE/SNP]
-	534A3-82451	+	DECAL,BATTERY B デカル	1	F:692- G:194- K:172- L:107- [EXB/FNP][EXE/FNP]
43	535E3-82291		DECAL,EC.SOUND デカル	1	A,B,C,D:2294- [EXE][EXN]

FIG.138 DECAL [EXA,EXB,EXC,EXE,EXK,EXN]

(F4049120) デカル

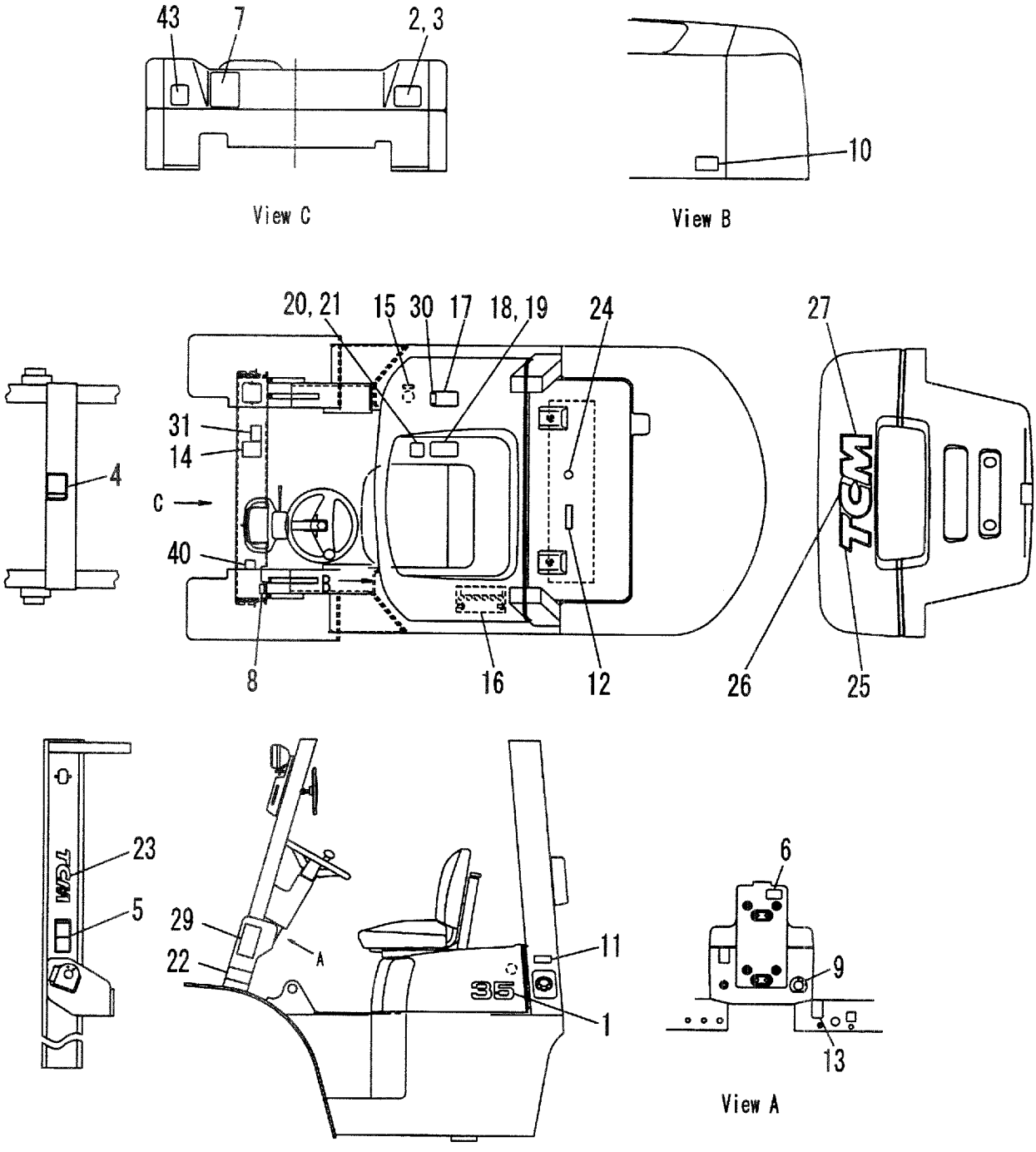

A:FD35C8 D:FD40T8 G:FD50T8 K:FG45T8
B:FD35T8 E:FD45C8 H:FG35T8 L:FG50T8
C:FD40C8 F:FD45T8 J:FG40T8

FIG.138
(F4049120)

Item No	Part No.	Mark	Description	Req'd	Remarks : Serial No.
-	535E3-82311		DECAL,EC.SOUND デカル	1	E,F:2294- [EXE][EXN]
-	535E3-82271		DECAL,EC.SOUND デカル	1	G:539- [EXE][EXN]
-	535E3-82261		DECAL,EC.SOUND デカル	1	L:129- [EXE][EXN]

FIG.139 SERVICE TOOLS

(F4049210) サービスツール

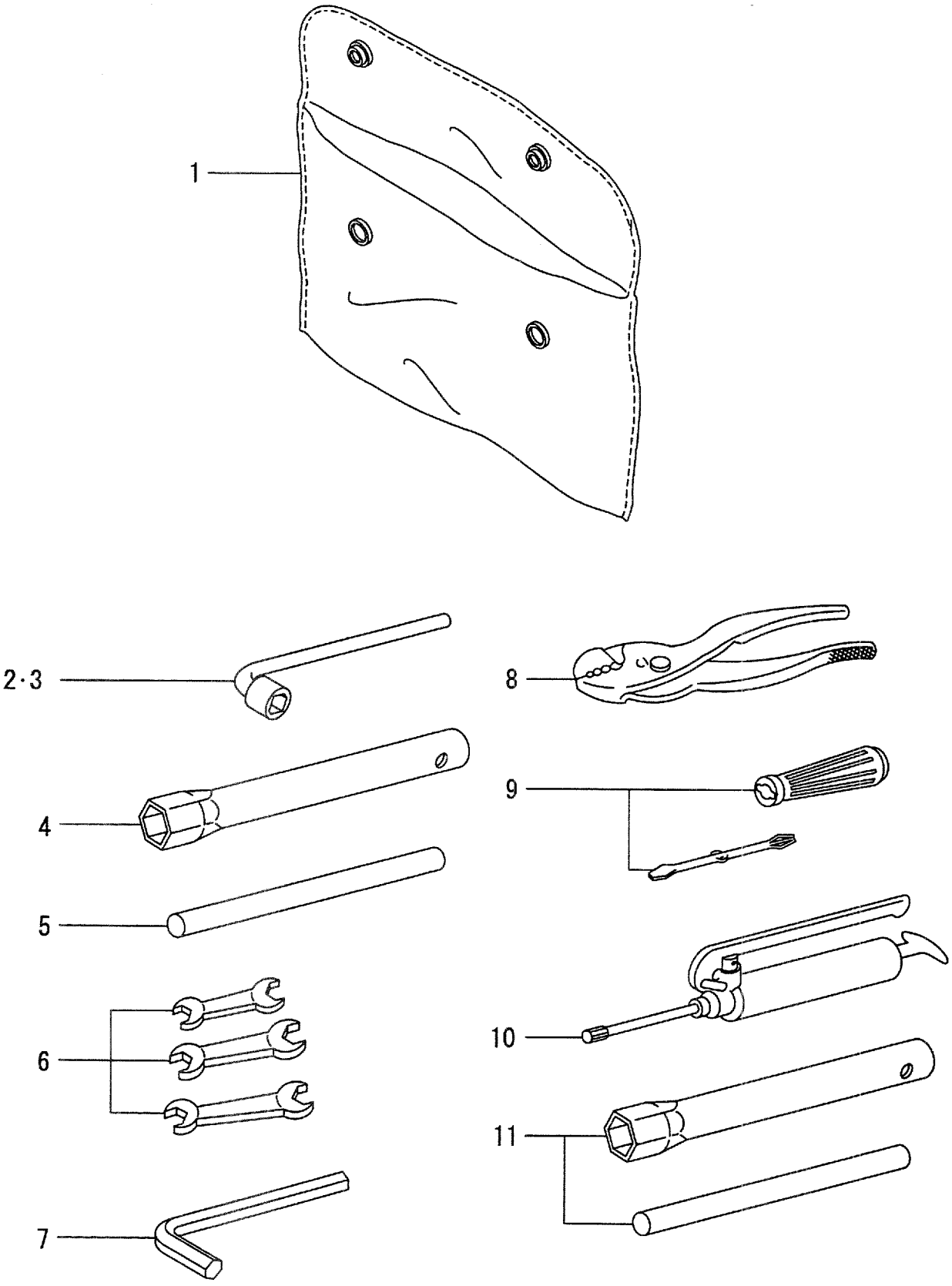

A:FD35C8 D:FD40T8 G:FD50T8 K:FG45T8
B:FD35T8 E:FD45C8 H:FG35T8 L:FG50T8
C:FD40C8 F:FD45T8 J:FG40T8

FIG.139
(F4049210)

Item No	Part No.	Mark	Description		Req'd	Remarks : Serial No.
1	214A9-20101		BAG,TOOL	ﾊﾞｯｸﾞ	1	
-	214A9-20101		BAG,TOOL	ﾊﾞｯｸﾞ	1	[TO][DD][DD/TO][SDD/TO]
-	214A9-20101		BAG,TOOL	ﾊﾞｯｸﾞ	1	A,B,C,D,H,J [SDD]
2	25599-22001		WRENCH,HUB-NUT	ﾚﾝﾁ	1	
-	25599-22001		WRENCH,HUB-NUT	ﾚﾝﾁ	1	[TO][DD][DD/TO][SDD/TO]
-	25599-22001		WRENCH,HUB-NUT	ﾚﾝﾁ	1	A,B,C,D,H,J [SDD]
3	24459-22011		WRENCH,HUB-NUT	ﾚﾝﾁ	1	
-	24459-22011		WRENCH,HUB-NUT	ﾚﾝﾁ	1	[TO]
4	23819-20011		WRENCH,HUB-NUT	ﾚﾝﾁ	1	[DD][DD/TO][SDD/TO]
-	23819-20011		WRENCH,HUB-NUT	ﾚﾝﾁ	1	A,B,C,D,H,J [SDD]
5	23819-20021		LEVER	ﾚﾊﾞｰ	1	[DD][DD/TO][SDD/TO]
-	23819-20021		LEVER	ﾚﾊﾞｰ	1	A,B,C,D,H,J [SDD]
6	25599-22051		SET,SPANNER	ｽﾊﾟﾅｾｯﾄ	1	[DD][DD/TO][SDD/TO] (8X10,10X12,14X17)
7	25599-22061		WRENCH,HEXAGON	ﾚﾝﾁ	1	[TO][DD/TO][SDD/TO]
8	23019-20011		PLIER,150MM	ﾌﾟﾗｲﾔ	1	[TO][DD/TO][SDD/TO]
9	22199-22261		DRIVER,SET	ﾄﾞﾗｲﾊﾞ	1	[TO][DD/TO][SDD/TO]
10	22199-22001		GUN,GREASE	ｶﾞﾝ	1	[TO][DD/TO][SDD/TO]
11	22119-20012		WRENCH,PLUG	ﾚﾝﾁ	1	H,J,K,L [TO][SDD/TO]

FIG.140 SERVICE TOOLS [EXB]

(F4049220) サービスツール

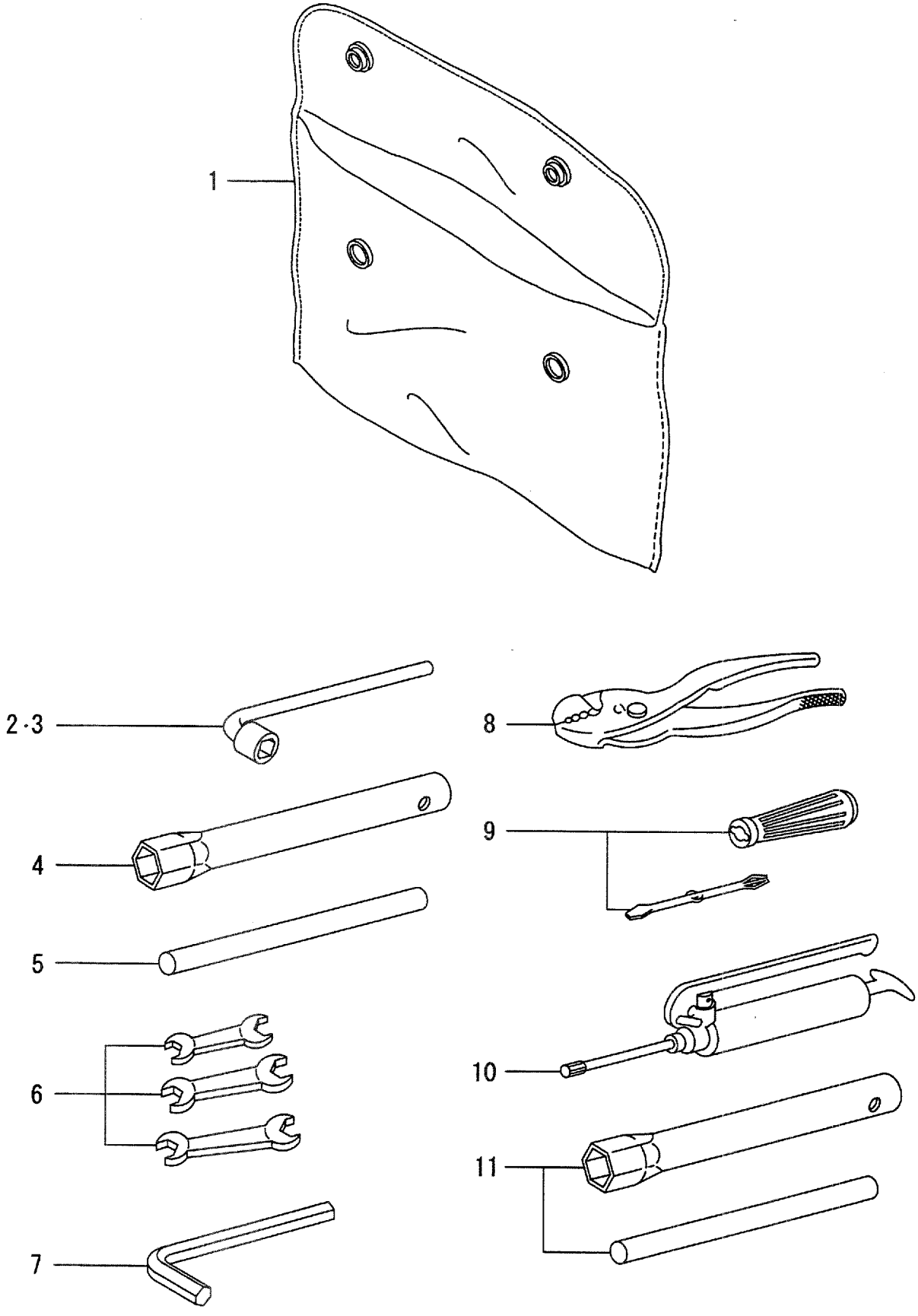

A:FD35C8 D:FD40T8 G:FD50T8 K:FG45T8
B:FD35T8 E:FD45C8 H:FG35T8 L:FG50T8
C:FD40C8 F:FD45T8 J:FG40T8

FIG.140
(F4049220)

Item No	Part No.	Mark	Description		Req'd	Remarks : Serial No.
1	214A9-20101		BAG,TOOL	ﾊﾞｯｸﾞ	1	[EXB]
2	25599-22001		WRENCH,HUB-NUT	ﾚﾝﾁ	1	[EXB]
3	24459-22011		WRENCH,HUB-NUT	ﾚﾝﾁ	1	[EXB]
4	23819-20011		WRENCH,HUB-NUT	ﾚﾝﾁ	1	[EXB/DD][EXB/SDD]
5	23819-20021		LEVER	ﾚﾊﾞｰ	1	[EXB/DD][EXB/SDD]
6	25599-22051		SET,SPANNER	ｽﾊﾟﾅｾｯﾄ	1	[EXB](8X10,10X12,14X17)
7	25599-22061		WRENCH,HEXAGON	ﾚﾝﾁ	1	[EXB]
8	23019-20011		PLIER,150MM	ﾌﾟﾗｲﾔ	1	[EXB]
9	22199-22261		SET,DRIVER	ﾄﾞﾗｲﾊﾞｾｯﾄ	1	[EXB]
10	22199-22001		GUN,GREASE	ｶﾞﾝ	1	[EXB]
11	22119-20012		WRENCH,PLUG	ﾚﾝﾁ	1	H,J,K,L [EXB]

FIG.141 FRONT GLASS [AW071][AW061]

(F4049310) フロントガラス

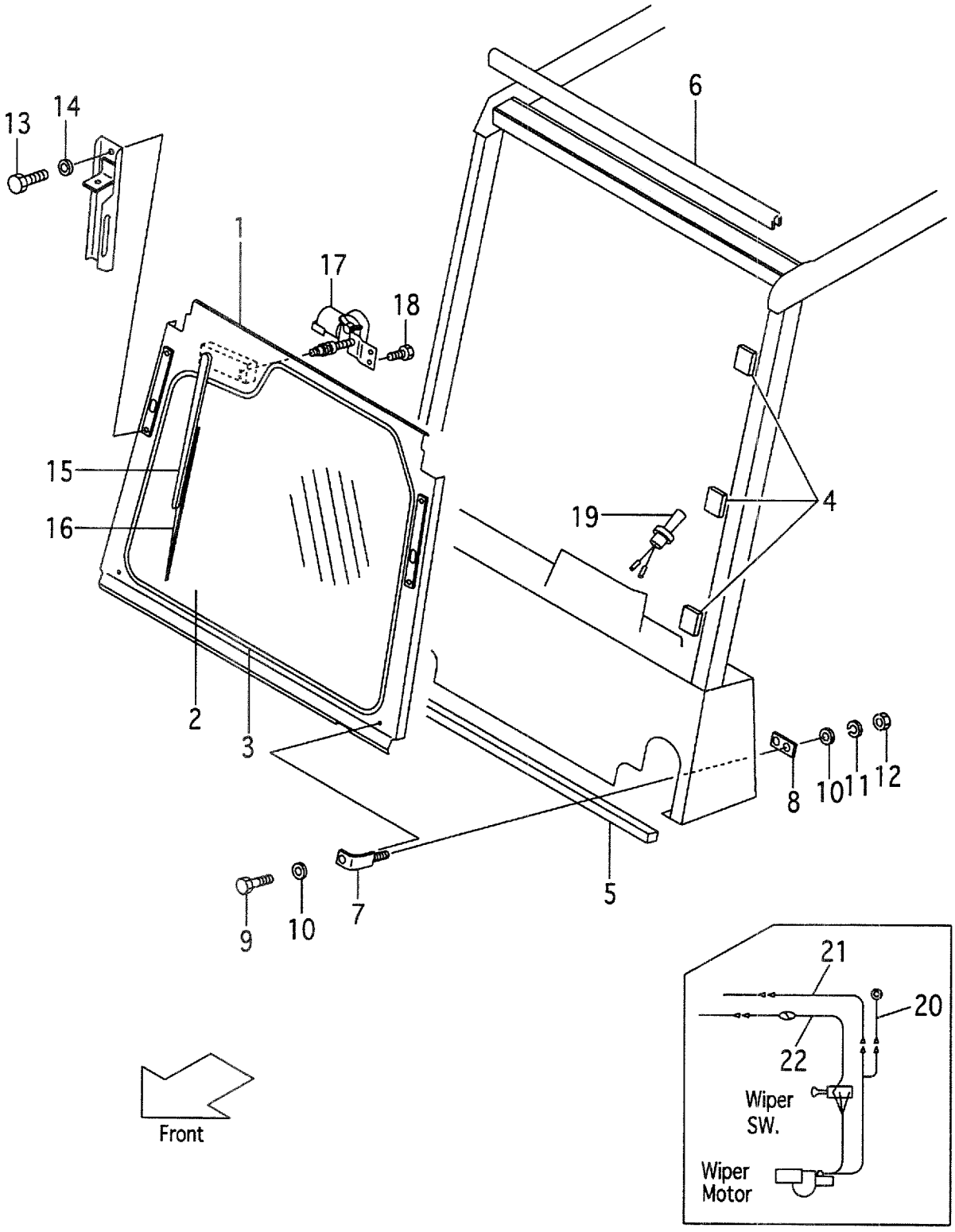

A:FD35C8 D:FD40T8 G:FD50T8 K:FG45T8
B:FD35T8 E:FD45C8 H:FG35T8 L:FG50T8
C:FD40C8 F:FD45T8 J:FG40T8

FIG.141
(F4049310)

Item No	Part No.	Mark	Description		Req'd	Remarks : Serial No.
A1	535C5-40001		GLASS-ASSY,FRONT	ﾌﾛﾝﾄｶﾞﾗｽｱｯｾﾝ	1	[AW071][AW061] INC.1-3
-	535C5-40191		GLASS-ASSY,FRONT	ﾌﾛﾝﾄｶﾞﾗｽｱｯｾﾝ	1	[HGH/AW071][HGH/AW061] INC.1-3
-	535C5-40191		GLASS-ASSY,FRONT	ﾌﾛﾝﾄｶﾞﾗｽｱｯｾﾝ	1	[EXN/AW071][EXN/AW061] INC.1-3
-	535C5-40291		GLASS-ASSY,FRONT	ﾌﾛﾝﾄｶﾞﾗｽｱｯｾﾝ	1	[HGE/AW071][HGE/AW061] INC.1-3
-	535C5-40291		GLASS-ASSY,FRONT	ﾌﾛﾝﾄｶﾞﾗｽｱｯｾﾝ	1	[EXE/AW071][EXE/AW061] INC.1-3
-	535C5-40391		GLASS-ASSY,FRONT	ﾌﾛﾝﾄｶﾞﾗｽｱｯｾﾝ	1	[HGL/AW071][HGL/AW061] INC.1-3
1	535C5-40101		SUPPORT,GLASS	ｻﾎﾟｰﾄ	1	[AW071][AW061]
-	535C5-40201		SUPPORT,GLASS	ｻﾎﾟｰﾄ	1	[HGH/AW071][HGH/AW061]
-	535C5-40201		SUPPORT,GLASS	ｻﾎﾟｰﾄ	1	[EXN/AW071][EXN/AW061]
-	535C5-40301		SUPPORT,GLASS	ｻﾎﾟｰﾄ	1	[HGE/AW071][HGE/AW061]
-	535C5-40301		SUPPORT,GLASS	ｻﾎﾟｰﾄ	1	[EXE/AW071][EXE/AW061]
-	535C5-40401		SUPPORT,GLASS	ｻﾎﾟｰﾄ	1	[HGL/AW071][HGL/AW061]
2	535C5-42131		GLASS	ｶﾞﾗｽ	1	[AW071][AW061]
-	535C5-42131		GLASS	ｶﾞﾗｽ	1	[HGE/AW071][HGE/AW061]
-	535C5-42131		GLASS	ｶﾞﾗｽ	1	[EXE/AW071][EXE/AW061]
-	535C5-42231		GLASS	ｶﾞﾗｽ	1	[HGH/AW071][HGH/AW061]
-	535C5-42231		GLASS	ｶﾞﾗｽ	1	[EXN/AW071][EXN/AW061]
-	535C5-42431		GLASS	ｶﾞﾗｽ	1	[HGL/AW071][HGL/AW061]
3	55955-42031		RUBBER	ﾗﾊﾞｰ	1	[AW071][AW061]
-	55955-42031		RUBBER	ﾗﾊﾞｰ	1	[HGE/AW071][HGE/AW061]
-	55955-42031		RUBBER	ﾗﾊﾞｰ	1	[HGL/AW071][HGL/AW061]
-	55955-42031		RUBBER	ﾗﾊﾞｰ	1	[EXE/AW071][EXE/AW061]
-	55785-42051		RUBBER	ﾗﾊﾞｰ	1	[HGH/AW071][HGH/AW061]
-	55785-42051		RUBBER	ﾗﾊﾞｰ	1	[EXN/AW071][EXN/AW061]
4	529F5-42061		RUBBER	ﾗﾊﾞｰ	6	[AW071][AW061]
5	55785-42101		RUBBER	ﾗﾊﾞｰ	1	[AW071][AW061]
6	529F5-42041		RUBBER	ﾗﾊﾞｰ	1	[AW071][AW061]
7	530C5-42041		CLAMP	ｸﾗﾝﾌﾟ	2	[AW071][AW061]
8	55955-42151		PLATE	ﾌﾟﾚｰﾄ	2	[AW071][AW061]
9	01100-10125		BOLT	ﾎﾞﾙﾄ	2	[AW071][AW061]
10	02000-00010		WASHER	ﾜｯｼｬ	6	[AW071][AW061]
11	02010-00010		WASHER	ﾜｯｼｬ	4	[AW071][AW061]
12	53671-92821		NUT	ﾅｯﾄ	4	[AW071][AW061]
13	01100-08065		BOLT	ﾎﾞﾙﾄ	4	[AW071][AW061]
14	02000-00008		WASHER	ﾜｯｼｬ	4	[AW071][AW061]
15	55955-42052		ARM,WIPER	ｱｰﾑ	1	[AW071][AW061]
-	514A5-42041		ARM,WIPER	ｱｰﾑ	1	[HGL/AW071][HGL/AW061]
16	514A5-42051		BLADE,WIPER	ﾌﾞﾚｰﾄﾞ	1	[AW071][AW061]
-	55815-32271		BLADE,WIPER	ﾌﾞﾚｰﾄﾞ	1	[HGL/AW071][HGL/AW061]
17	535C5-42141		MOTOR,WIPER	ﾓｰﾀ	1	A,B,C,D,E,F,G [AW071][AW061]
-	514A5-32301		MOTOR,WIPER	ﾓｰﾀ	1	H,J,K,L [AW071][AW061]
18	27042-63111		SCREW	ｽｸﾘｭ	2	[AW071][AW061]
19	55595-43632		SWITCH,WIPER	ｽｲｯﾁ	1	[AW071][AW061]

FIG.141 FRONT GLASS [AW071][AW061]

(F4049310) フロントガラス

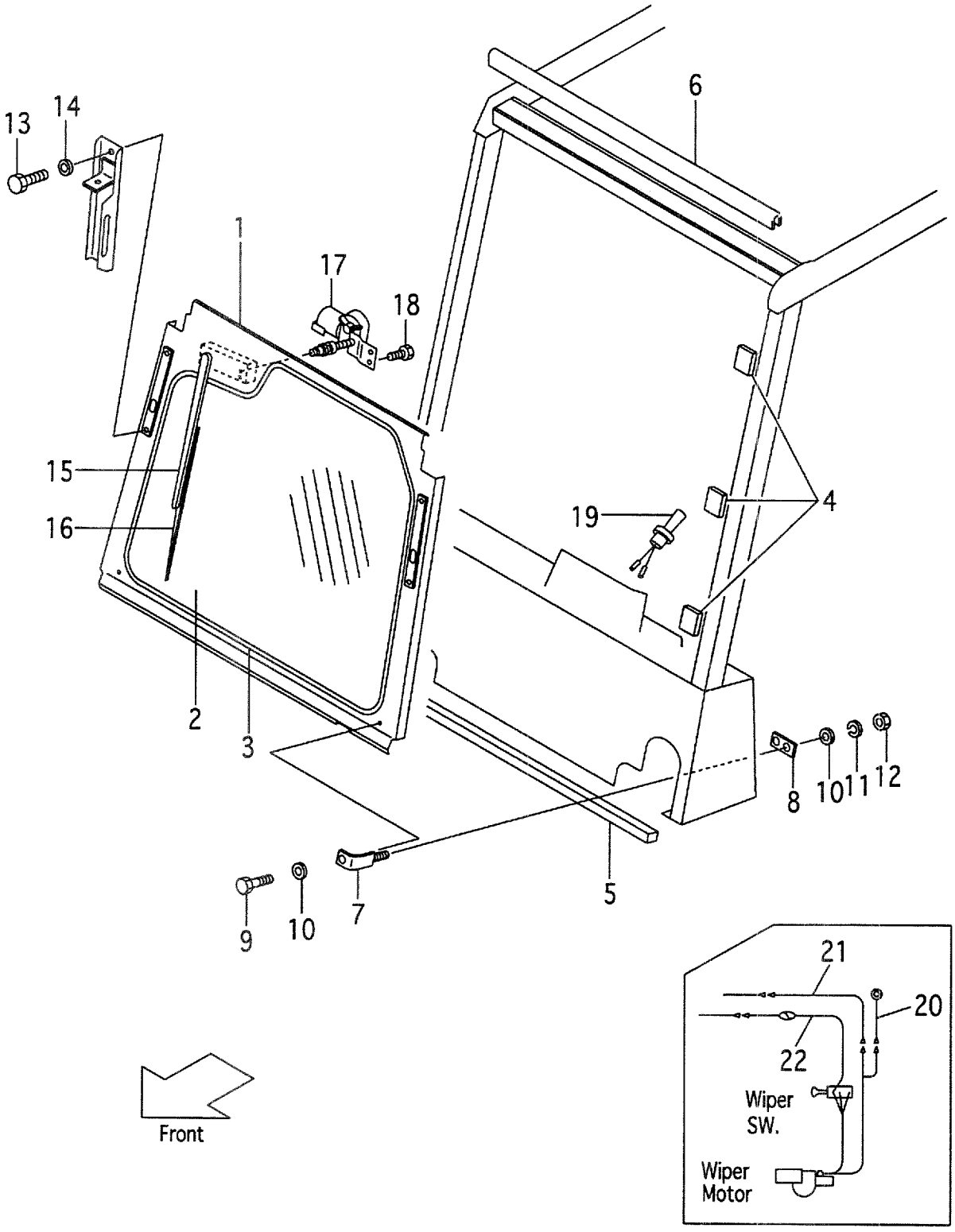

A:FD35C8 D:FD40T8 G:FD50T8 K:FG45T8
B:FD35T8 E:FD45C8 H:FG35T8 L:FG50T8
C:FD40C8 F:FD45T8 J:FG40T8

FIG.141
(F4049310)

Item No	Part No.	Mark	Description		Req'd	Remarks : Serial No.
20	229F2-42141		WIRE,LEAD	ﾜｲﾔ	1	[AW071][AW061]
21	535C5-42151		WIRE-HARNESS,A	ﾜｲﾔﾊｰﾈｽ	1	[AW071][AW061]
22	535C5-42161		WIRE-HARNESS,B	ﾜｲﾔﾊｰﾈｽ	1	[AW071][AW061]

FIG.142 LPG SYSTEM [LPG]

(F4049320) LPGシステム

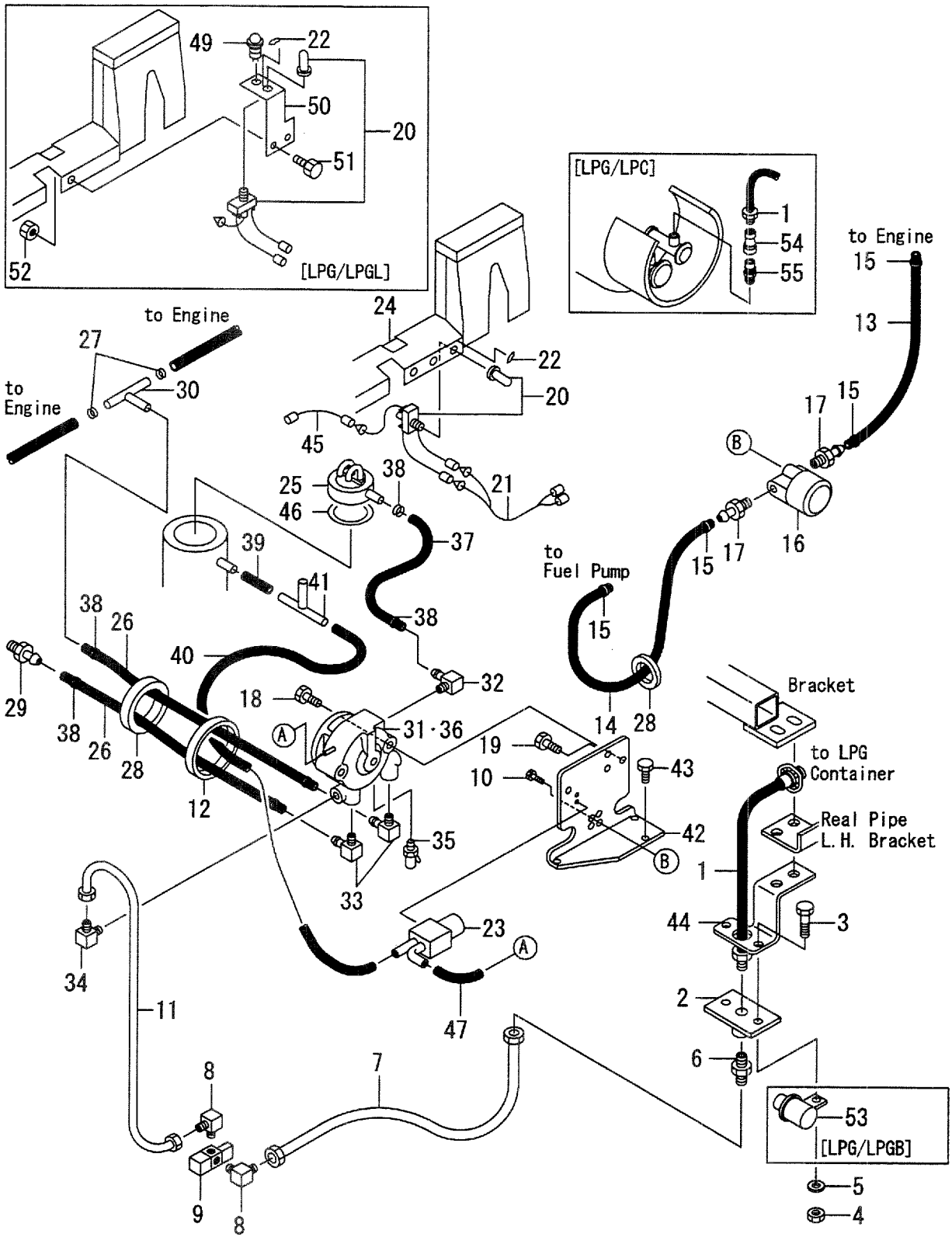

A:FD35C8 D:FD40T8 G:FD50T8 K:FG45T8
B:FD35T8 E:FD45C8 H:FG35T8 L:FG50T8
C:FD40C8 F:FD45T8 J:FG40T8

FIG.142
(F4049320)

Item No	Part No.	Mark	Description		Req'd	Remarks : Serial No.
A1	535L0-50101		LPG-ASSY	LPGｱｯｾﾝ	1	H,J,K,L [LPG] INC.1-48
1	513A0-52351		HOSE,HP	ﾎｰｽ	1	H,J,K,L [LPG]
-	513A0-52371		HOSE,HP	ﾎｰｽ	1	H,J,K,L [LPG/LPC](ONE TOUTCH)
-	513A0-52361		HOSE,HP	ﾎｰｽ	1	H,J,K,L [LPG/STOP VALVE]
2	51230-52131		CONNECTOR	ｺﾈｸﾀ	1	H,J,K,L [LPG]
3	01181-06010		BOLT	ﾎﾞﾙﾄ	3	H,J,K:1-133 L:1-102 [LPG]
-	01181-06010		BOLT	ﾎﾞﾙﾄ	2	H,J,K:134- L:103- [LPG]
4	01400-00006		NUT	ﾅｯﾄ	3	H,J,K:1-133 L:1-102 [LPG]
-	01400-00006		NUT	ﾅｯﾄ	2	H,J,K:134- L:103- [LPG]
5	02010-00006		WASHER	ﾜｯｼｬ	3	H,J,K:1-133 L:1-102 [LPG]
-	02010-00006		WASHER	ﾜｯｼｬ	2	H,J,K:134- L:103- [LPG]
6	51230-52181		NIPPLE	ﾆｯﾌﾟﾙ	1	H,J,K,L [LPG]
7	51230-52081		TUBE	ﾁｭｰﾌﾞ	1	H,J,K:1-133 L:1-102 [LPG]
-	535L0-52541		TUBE	ﾁｭｰﾌﾞ	1	H,J,K:134- L:103- [LPG]
A2	531A0-50111		SOLENOID & FILTER-ASSY	ｿﾚﾉｲﾄﾞ&ﾌｨﾙﾀｱｯｾﾝ	1	H,J,K,L [LPG] INC.8,9
8	51230-52311		ELBOW	ｴﾙﾎﾞ	2	H,J,K:1-133 L:1-102 [LPG]
-	531A0-52041		ELBOW	ｴﾙﾎﾞ	2	H,J,K:134- L:103- [LPG]
9	53450-53091		SOLENOID & FILTER	ｿﾚﾉｲﾄﾞ&ﾌｨﾙﾀ	1	H,J,K:1-133 L:1-102 [LPG]
-	53450-53101		NIPPLE	ﾆｯﾌﾟﾙ	1	H,J,K:1-133 L:1-102 [LPG]

FIG.142 LPG SYSTEM [LPG]

(F4049320) LPGシステム

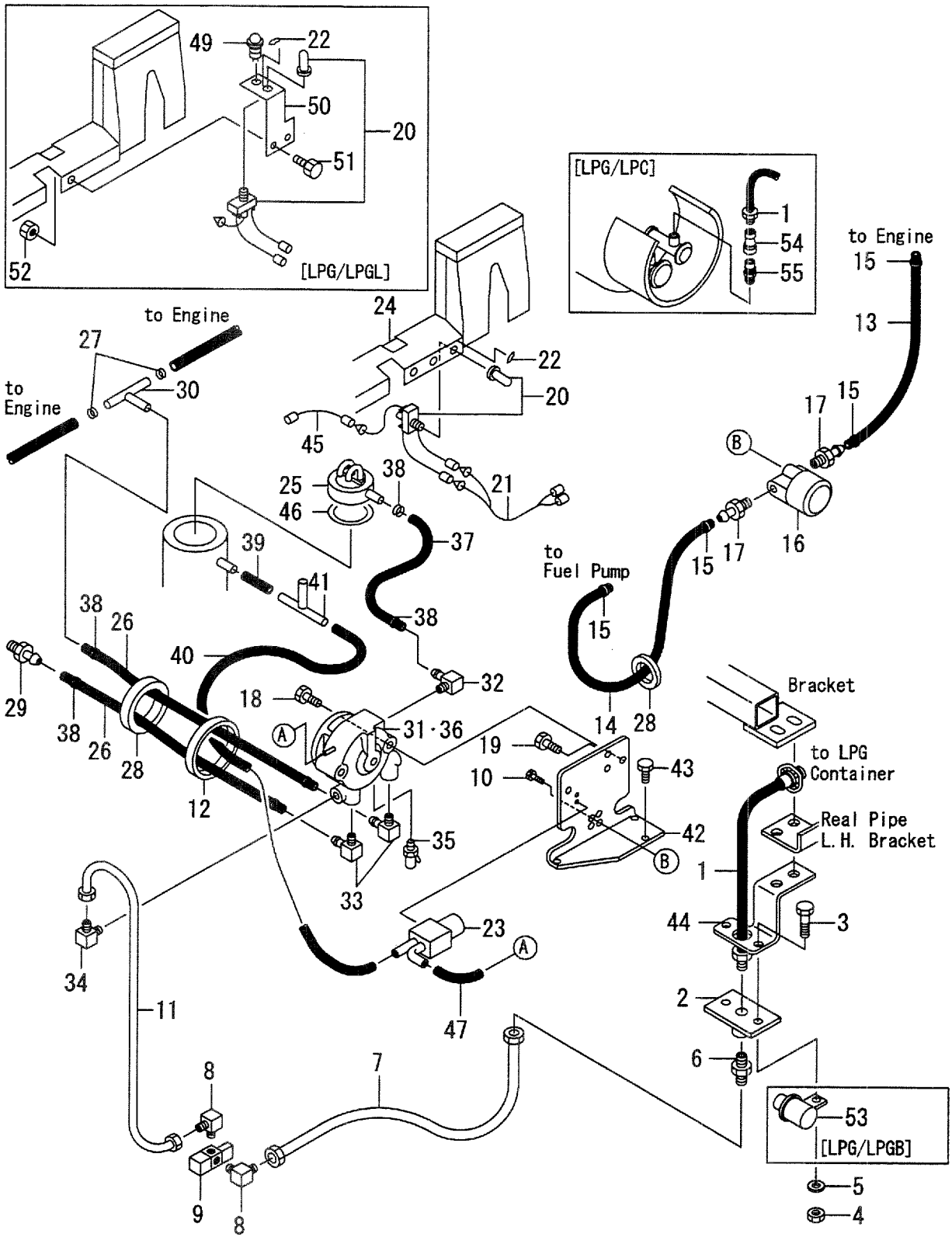

A:FD35C8 D:FD40T8 G:FD50T8 K:FG45T8
B:FD35T8 E:FD45C8 H:FG35T8 L:FG50T8
C:FD40C8 F:FD45T8 J:FG40T8

FIG.142
(F4049320)

Item No	Part No.	Mark	Description		Req'd	Remarks : Serial No.
-	53450-53111		FILTER	ﾌｨﾙﾀ	1	H,J,K:1-133 L:1-102 [LPG]
-	531A0-52641		SOLENOID & FILTER	ｿﾚﾉｲﾄﾞ&ﾌｨﾙﾀ	1	H,J,K:134- L:103- [LPG]
10	01183-06010		BOLT	ﾎﾞﾙﾄ	2	H,J,K,L [LPG]
11	535L0-52531		TUBE	ﾁｭｰﾌﾞ	1	H,J,K,L [LPG]
12	51230-52161		BAND	ﾊﾞﾝﾄﾞ	1	H,J,K,L [LPG]
13	523U0-52392		HOSE	ﾎｰｽ	1	H,J,K,L [LPG]
14	523U0-52402		HOSE	ﾎｰｽ	1	H,J,K,L [LPG]
15	523U0-52451		CLIP	ｸﾘｯﾌﾟ	4	H,J,K,L [LPG]
A3	523U0-50121		SOLENOID-ASSY	ｿﾚﾉｲﾄﾞｱｯｾﾝ	1	H,J,K,L [LPG] INC.16,17
16	53450-53171		SOLENOID	ｿﾚﾉｲﾄﾞ	1	H,J,K,L [LPG]
17	523U0-52441		NIPPLE	ﾆｯﾌﾟﾙ	2	H,J,K,L [LPG]
18	01183-08045		BOLT	ﾎﾞﾙﾄ	2	H,J,K,L [LPG]
19	01183-08020		BOLT	ﾎﾞﾙﾄ	2	H,J,K:1-133 L:1-102 [LPG]
-	01183-08016		BOLT	ﾎﾞﾙﾄ	2	H,J,K:134- L:103- [LPG]
20	51230-52101		SWITCH	ｽｲｯﾁ	1	H,J,K,L [LPG]
21	51230-52111		WIRE-HARNESS	ﾜｲﾔﾊｰﾈｽ	1	H,J,K,L [LPG]
22	51230-52121		DECAL,SW.	ﾃﾞｶﾙ	1	H,J,K,L [LPG]
23	535L0-52351		SOLENOID	ｿﾚﾉｲﾄﾞ	1	H,J,K,L [LPG]
24	51230-52171		DECAL,CAUTION	ﾃﾞｶﾙ	1	H,J,K,L [LPG]
-	51230-52331		DECAL,CAUTION	ﾃﾞｶﾙ	1	H,J,K,L [LPG/EX]
25	523U0-52311		ADAPTER	ｱﾀﾞﾌﾟﾀ	1	H,J,K,L [LPG]
26	523U0-52371		HOSE	ﾎｰｽ	1	H,J,K:1-133 L:1-102 [LPG]

FIG.142 LPG SYSTEM [LPG]

(F4049320) LPGシステム

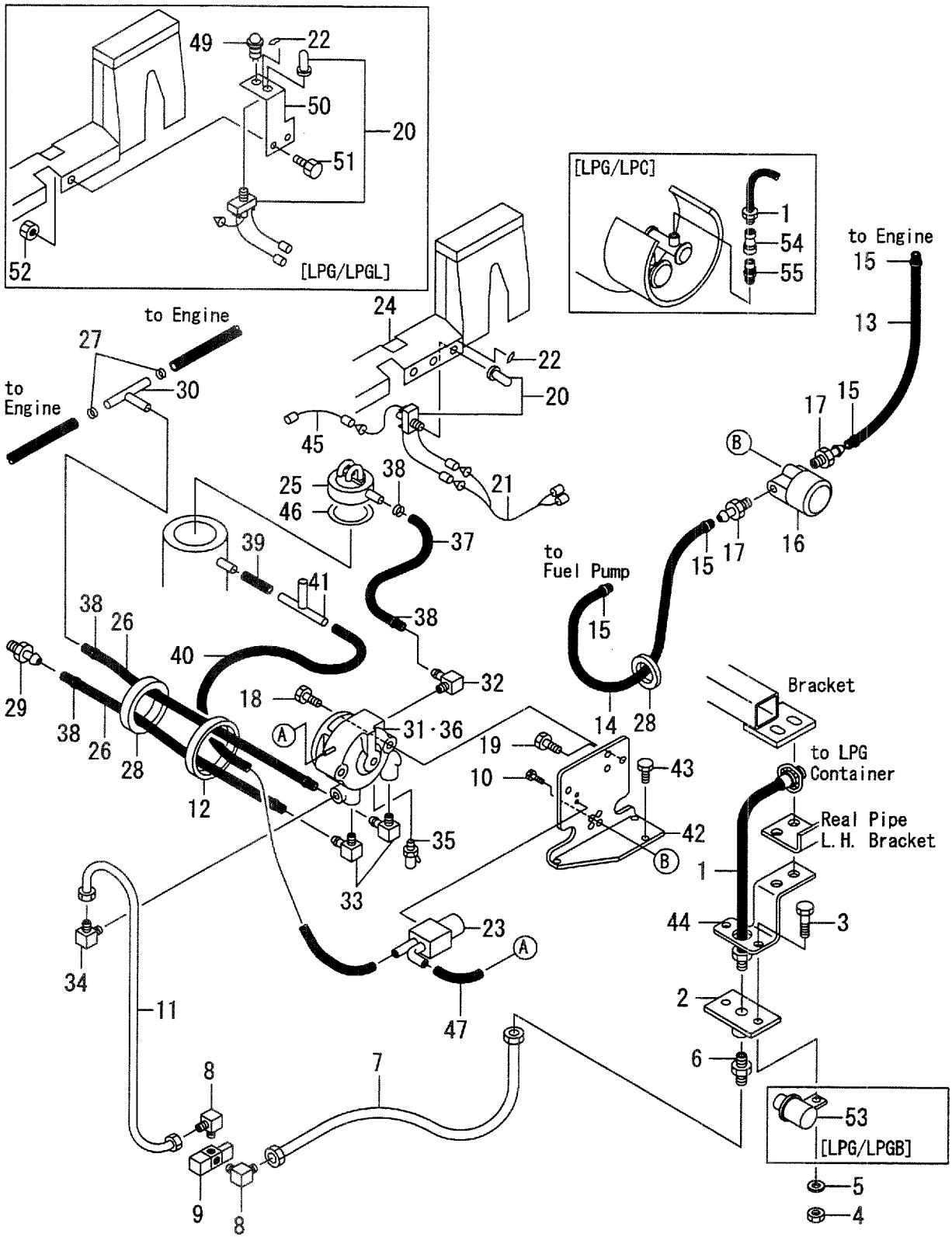

A:FD35C8 D:FD40T8 G:FD50T8 K:FG45T8
B:FD35T8 E:FD45C8 H:FG35T8 L:FG50T8
C:FD40C8 F:FD45T8 J:FG40T8

FIG.142
(F4049320)

Item No	Part No.	Mark	Description		Req'd	Remarks : Serial No.
-	523U0-52381		HOSE	ﾎｰｽ	1	H,J,K:1-133 L:1-102 [LPG]
-	523U0-52381		HOSE	ﾎｰｽ	2	H,J,K:134- L:103- [LPG]
27	04911-00028		CLIP	ｸﾘｯﾌﾟ	2	H,J,K,L [LPG]
28	51230-52151		BAND	ﾊﾞﾝﾄﾞ	2	H,J,K,L [LPG]
29	523U0-52331		NIPPLE	ﾆｯﾌﾟﾙ	1	H,J,K,L [LPG]
30	523U0-52321		THREE-WAY	ｽﾘｰｳｴｲ	1	H,J,K,L [LPG]
A4	535L0-50111		VAPORIZER-ASSY	ﾍﾞｰﾎﾟﾗｲｻﾞｱｯｾﾝ	1	H,J,K,L [LPG] INC.31-36
31	53450-53002		VAPORIZER	ﾍﾞｰﾎﾟﾗｲｻﾞ	1	H,J,K,L [LPG]
32	523U0-52411		ELBOW	ｴﾙﾎﾞ	1	H,J,K,L [LPG]
33	53450-53021		ELBOW	ｴﾙﾎﾞ	2	H,J,K,L [LPG]
34	51230-52311		ELBOW	ｴﾙﾎﾞ	1	H,J,K:1-133 L:1-102 [LPG]
-	531A0-52041		ELBOW	ｴﾙﾎﾞ	1	H,J,K:134- L:103- [LPG]
35	51230-52321		COCK	ｺｯｸ	1	H,J,K,L [LPG]
36	531A0-52651		SOLENOID	ｿﾚﾉｲﾄﾞ	1	H,J,K,L [LPG]
37	523U0-52361		HOSE	ﾎｰｽ	1	H,J,K,L [LPG]
38	04911-00024		CLIP	ｸﾘｯﾌﾟ	6	H,J,K,L [LPG]
39	523U0-52461		HOSE	ﾎｰｽ	1	H,J,K,L [LPG]
40	535L0-52511		HOSE	ﾎｰｽ	1	H,J,K,L [LPG]
41	51230-52141		JOINT	ｼﾞｮｲﾝﾄ	1	H,J,K,L [LPG]
42	535L0-52301		BRACKET	ﾌﾞﾗｹｯﾄ	1	H,J,K,L [LPG]
43	229F2-22191		BOLT	ﾎﾞﾙﾄ	4	H,J,K:1-133 L:1-102 [LPG]
-	229F2-22191		BOLT	ﾎﾞﾙﾄ	3	H,J,K:134- L:103- [LPG]

FIG.142 LPG SYSTEM [LPG]

(F4049320) LPGシステム

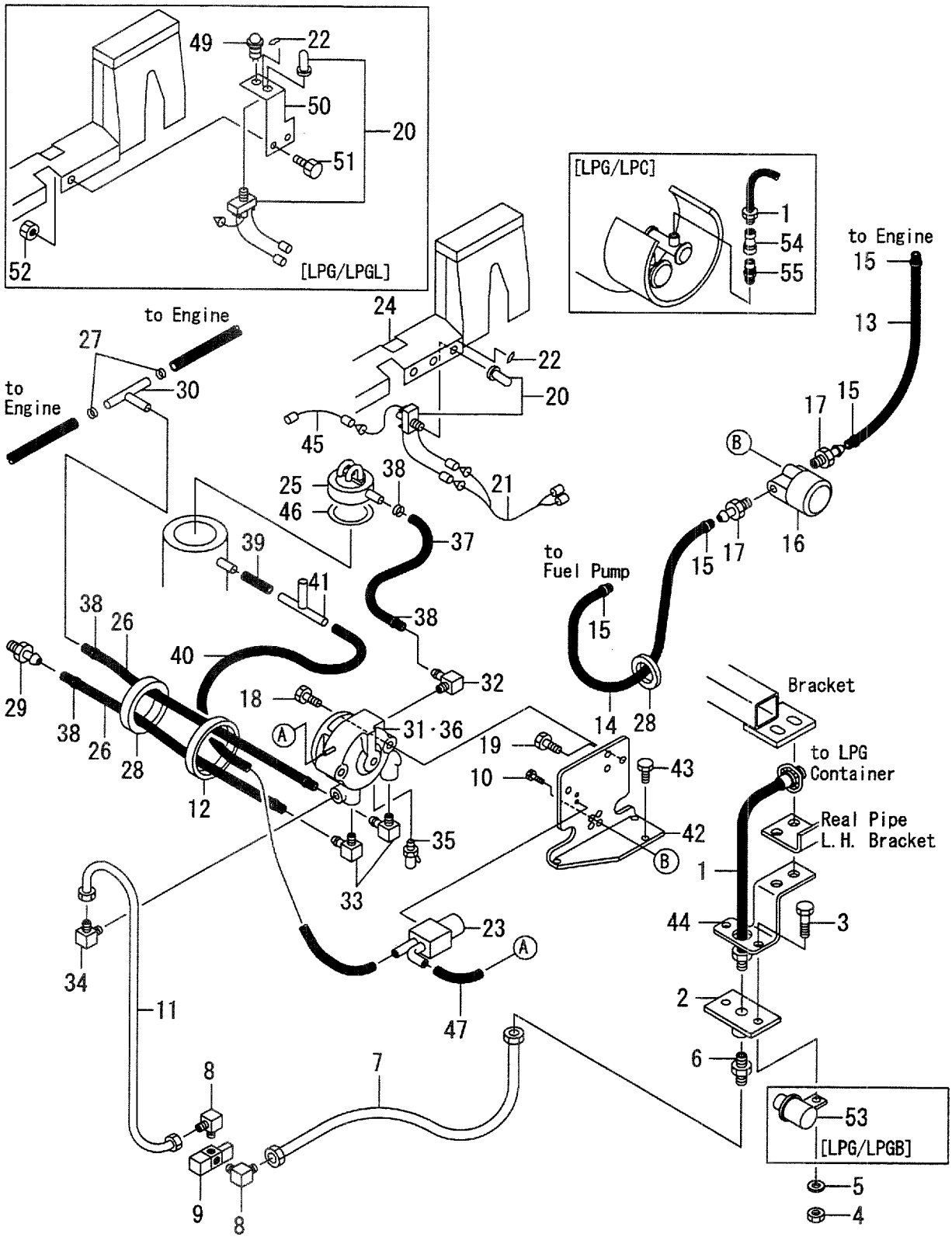

A:FD35C8 D:FD40T8 G:FD50T8 K:FG45T8
B:FD35T8 E:FD45C8 H:FG35T8 L:FG50T8
C:FD40C8 F:FD45T8 J:FG40T8

FIG.142
(F4049320)

Item No	Part No.	Mark	Description		Req'd	Remarks : Serial No.
44	535L0-52401		PLATE	ﾌﾟﾚｰﾄ	1	H,J,K,L [LPG]
45	535L0-52461		WIRE-HARNESS	ﾜｲﾔﾊｰﾈｽ	1	H,J,K,L [LPG]
46	523U0-52431		PACKING	ﾊﾟｯｷﾝｸﾞ	1	H,J,K,L [LPG]
47	535L0-52521		HOSE	ﾎｰｽ	1	H,J,K,L [LPG]
48	535L0-52471	+	WIRE-HARNESS	ﾜｲﾔﾊｰﾈｽ	1	H,J,K,L [LPG]
49	55530-52231		LAMP,WARNING	ﾗﾝﾌﾟ	1	H,J,K,L [LPG/LPGL]
50	535L0-52451		PANEL	ﾊﾟﾈﾙ	1	H,J,K:1-133 L:1-102 [LPG/LPGL]
-	535L0-52451		PANEL	ﾊﾟﾈﾙ	1	H,J,K:134- L:103- [LPG/LPGL]
51	01186-10020		BOLT	ﾎﾞﾙﾄ	1	H,J,K:1-133 L:1-102 [LPG/LPGL]
-	01186-10020		BOLT	ﾎﾞﾙﾄ	1	H,J,K:134- L:103- [LPG/LPGL]
52	01400-00010		NUT	ﾅｯﾄ	1	H,J,K:1-133 L:1-102 [LPG/LPGL]
-	01400-00010		NUT	ﾅｯﾄ	1	H,J,K:134- L:103- [LPG/LPGL]
53	55530-52241		BUZZER,WARNING	ﾌﾞｻﾞｰ	1	H,J,K,L [LPG/LPGB]
54	55530-52221		SOCKET	ｿｹｯﾄ	1	H,J,K,L [LPG/LPC](ONE TOUTCH)
55	55530-52211		PLUG	ﾌﾟﾗｸﾞ	1	H,J,K,L [LPG/LPC](ONE TOUTCH)

FIG.143 LPO SYSTEM [LPO]

(F4049330) LPOシステム

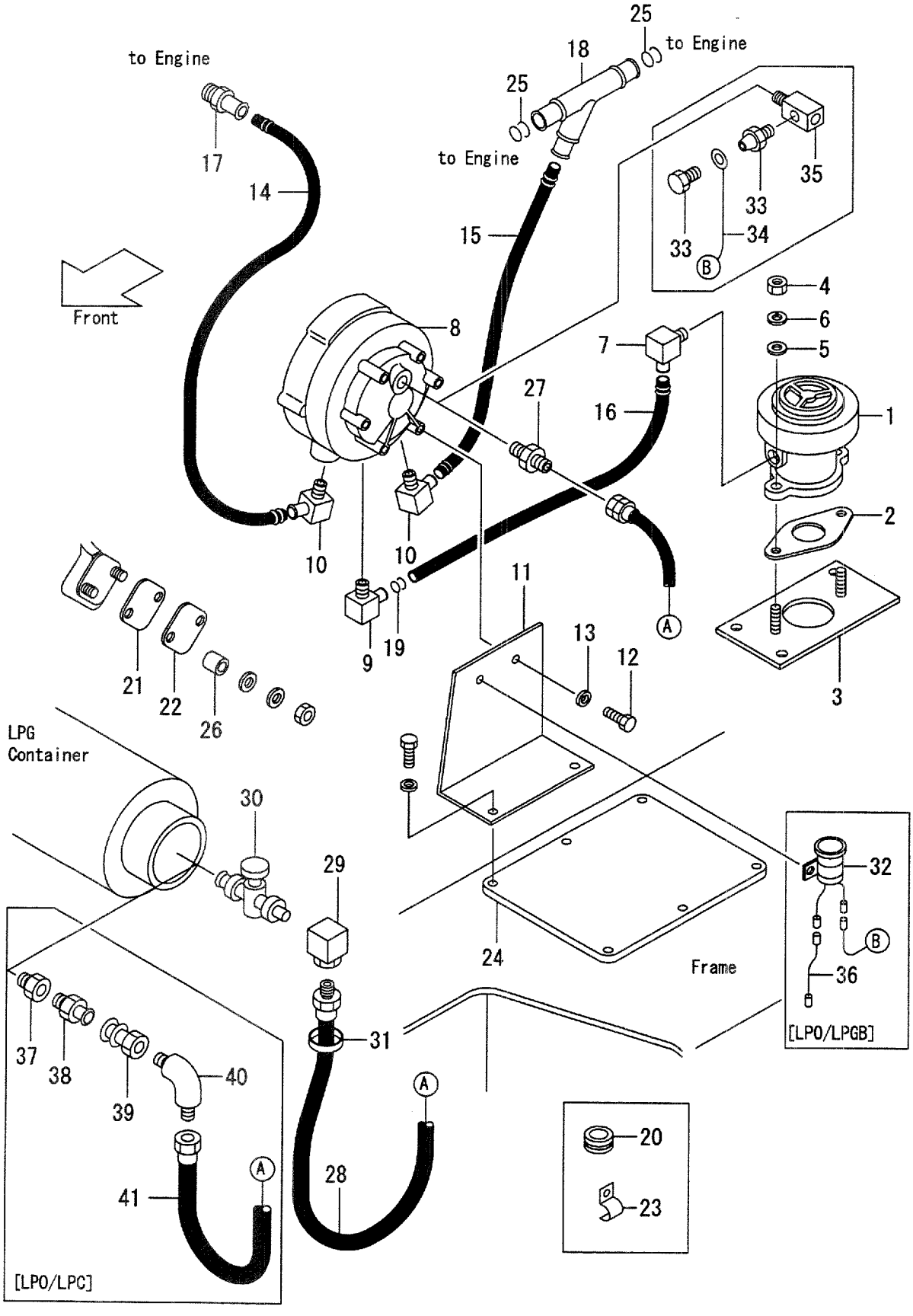

A:FD35C8 D:FD40T8 G:FD50T8 K:FG45T8:1-308
B:FD35T8 E:FD45C8 H:FG35T8:1-308 L:FG50T8:1-128
C:FD40C8 F:FD45T8 J:FG40T8:1-308

FIG.143
(F4049330)

Item No	Part No.	Mark	Description		Req'd	Remarks : Serial No.
A1	523W0-50201		CARBURETOR-ASSY	ｷｬﾌﾞﾚﾀｱｯｾﾝ	1	H,J,K,L [LPO] INC.1-7
1	523W0-52021	*	CARBURETOR	ｷｬﾌﾞﾚﾀ	1	H,J,K,L [LPO]SEE FIG.144
2	52580-53031	*	GASKET	ｶﾞｽｹｯﾄ	1	H,J,K,L [LPO]
3	523W0-52011	*	ADAPTER,THROTTLE	ｱﾀﾞﾌﾟﾀ	1	H,J,K,L [LPO]
4	01400-00008	*	NUT	ﾅｯﾄ	2	H,J,K,L [LPO]
5	02000-00008	*	WASHER	ﾜｯｼｬ	2	H,J,K,L [LPO]
6	02010-00008	*	WASHER	ﾜｯｼｬ	2	H,J,K,L [LPO]
7	54240-52021	*	ELBOW	ｴﾙﾎﾞ	1	H,J,K,L [LPO]
A2	523W0-50211		CONVERTER-ASSY	ｺﾝﾊﾞｰﾀｱｯｾﾝ	1	H,J,K,L [LPO] INC.8-13
8	523W0-52071	*	CONVERTER	ｺﾝﾊﾞｰﾀ	1	H,J,K,L [LPO]SEE FIG.145
9	523W0-52081	*	ELBOW	ｴﾙﾎﾞ	1	H,J,K,L [LPO]
10	523W0-52091	*	ELBOW	ｴﾙﾎﾞ	2	H,J,K,L [LPO]
11	523W0-52001	*	BRACKET	ﾌﾞﾗｹｯﾄ	1	H,J,K,L [LPO]
12	80110-00410	*	BOLT	ﾎﾞﾙﾄ	2	H,J,K,L [LPO]
13	80430-00004	*	WASHER	ﾜｯｼｬ	2	H,J,K,L [LPO]
14	523W0-52121	*	HOSE,WATER,L-250	ﾎｰｽ	1	H,J,K,L [LPO]
15	523W0-52131	*	HOSE,WATER,L-550	ﾎｰｽ	1	H,J,K,L [LPO]
16	523W0-52141	*	HOSE,WATER,L-600	ﾎｰｽ	1	H,J,K,L [LPO]
17	523W0-52101	*	NIPPLE	ﾆｯﾌﾟﾙ	1	H,J,K,L [LPO]
18	523W0-52111	*	TEE	ﾃｨｰ	1	H,J,K,L [LPO]
19	52050-53141	*	BAND	ﾊﾞﾝﾄﾞ	6	H,J,K,L [LPO]
20	52050-53171	*	GROMMET	ｸﾞﾛﾒｯﾄ	1	H,J,K,L [LPO]
21	53320-52322	*	GASKET	ｶﾞｽｹｯﾄ	1	H,J,K,L [LPO]
22	53320-52331	*	PLATE	ﾌﾟﾚｰﾄ	1	H,J,K,L [LPO]
23	51230-52091	*	CLAMP	ｸﾗﾝﾌﾟ	1	H,J,K,L [LPO]

FIG.143 LPO SYSTEM [LPO]

(F4049330) LPOシステム

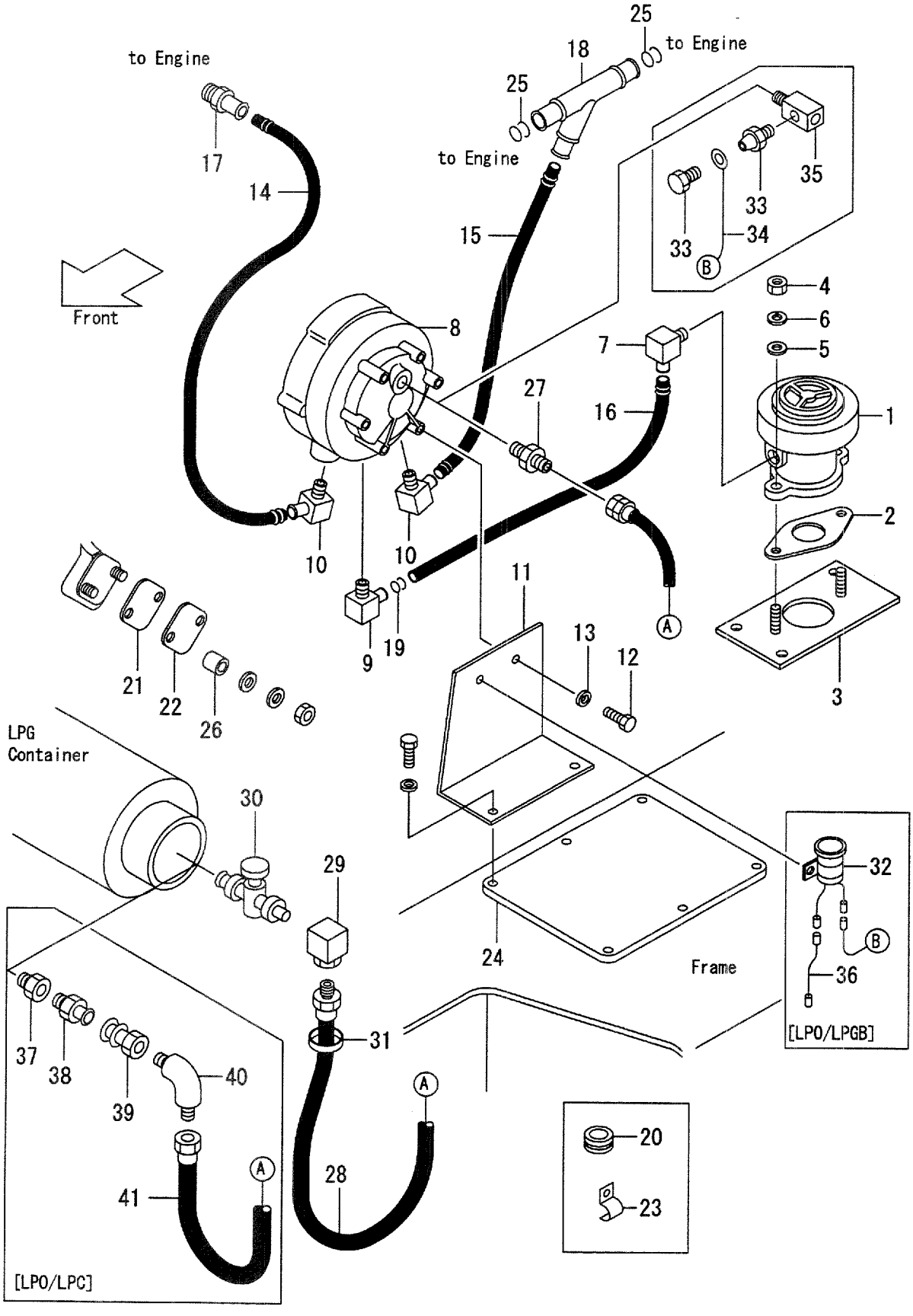

A:FD35C8 D:FD40T8 G:FD50T8 K:FG45T8:1-308
B:FD35T8 E:FD45C8 H:FG35T8:1-308 L:FG50T8:1-128
C:FD40C8 F:FD45T8 J:FG40T8:1-308

FIG.143
(F4049330)

Item No	Part No.	Mark	Description		Req'd	Remarks : Serial No.
24	535L0-52051		COVER	ｶﾊﾞｰ	1	H,J,K,L [LPO]
25	04911-00028		BAND	ﾊﾞﾝﾄﾞ	2	H,J,K,L [LPO]
26	53651-12201		SPACER	ｽﾍﾟｰｻ	2	H,J,K,L [LPO]
27	51240-52131		NIPPLE	ﾆｯﾌﾟﾙ	1	H,J,K,L [LPO](WITH BOMB)
-	533A0-52141	*	ELBOW	ｴﾙﾎﾞ	1	H,J,K,L [LPO/LPGB]
-	51240-52151		ELBOW	ｴﾙﾎﾞ	1	H,J,K,L [LPO/LPC]
28	523W0-52231		HOSE	ﾎｰｽ	1	H,J,K,L [LPO](WITH BOMB)
29	51240-52151		ELBOW	ｴﾙﾎﾞ	1	H,J,K,L [LPO](WITH BOMB)
30	51240-52481		VALVE	ﾊﾞﾙﾌﾞ	1	H,J,K,L [LPO](WITH BOMB)
31	22679-47301		GROMMET	ｸﾞﾛﾒｯﾄ	1	H,J,K,L [LPO]
32	51240-52441	*	BUZZER	ﾌﾞｻﾞｰ	1	H,J,K,L [LPO/LPGB]
33	51240-52451	*	SWITCH	ｽｲｯﾁ	1	H,J,K,L [LPO/LPGB]
34	51240-52491	*	WIRE-HARNESS	ﾜｲﾔﾊｰﾈｽ	1	H,J,K,L [LPO/LPGB]
35	51240-52551		NIPPLE	ﾆｯﾌﾟﾙ	1	H,J,K,L [LPO/LPGB]
36	55811-42001		WIRE,LEAD	ﾜｲﾔ	1	H,J,K,L [LPO/LPGB]
A3	51240-52411		PLUG-ASSY	ﾌﾟﾗｸﾞｱｯｾﾝ	1	H,J,K,L [LPO/LPC] INC.37,38
37	51240-52521		ADAPTER	ｱﾀﾞﾌﾟﾀ	1	H,J,K,L [LPO/LPC]
38	51240-52531		PLUG	ﾌﾟﾗｸﾞ	1	H,J,K,L [LPO/LPC]
A4	51240-52421		SOCKET-ASSY	ｿｹｯﾄｱｯｾﾝ	1	H,J,K,L [LPO/LPC] INC.39,40
39	51240-52511		SOCKET	ｿｹｯﾄ	1	H,J,K,L [LPO/LPC]
40	51240-52501		ELBOW	ｴﾙﾎﾞ	1	H,J,K,L [LPO/LPC]
41	51240-52161		HOSE	ﾎｰｽ	1	H,J,K,L [LPO/LPC]
-	533A0-52121		HOSE,VINYL	ﾎｰｽ	1	H,J,K,L [LPO/LPC]
K1	523W0-50101		KIT,LPO	LPOｷｯﾄ	1	H,J,K,L [LPO] INC.1-23

FIG.143 LPO SYSTEM [LPO]

(F4049330) LPOシステム

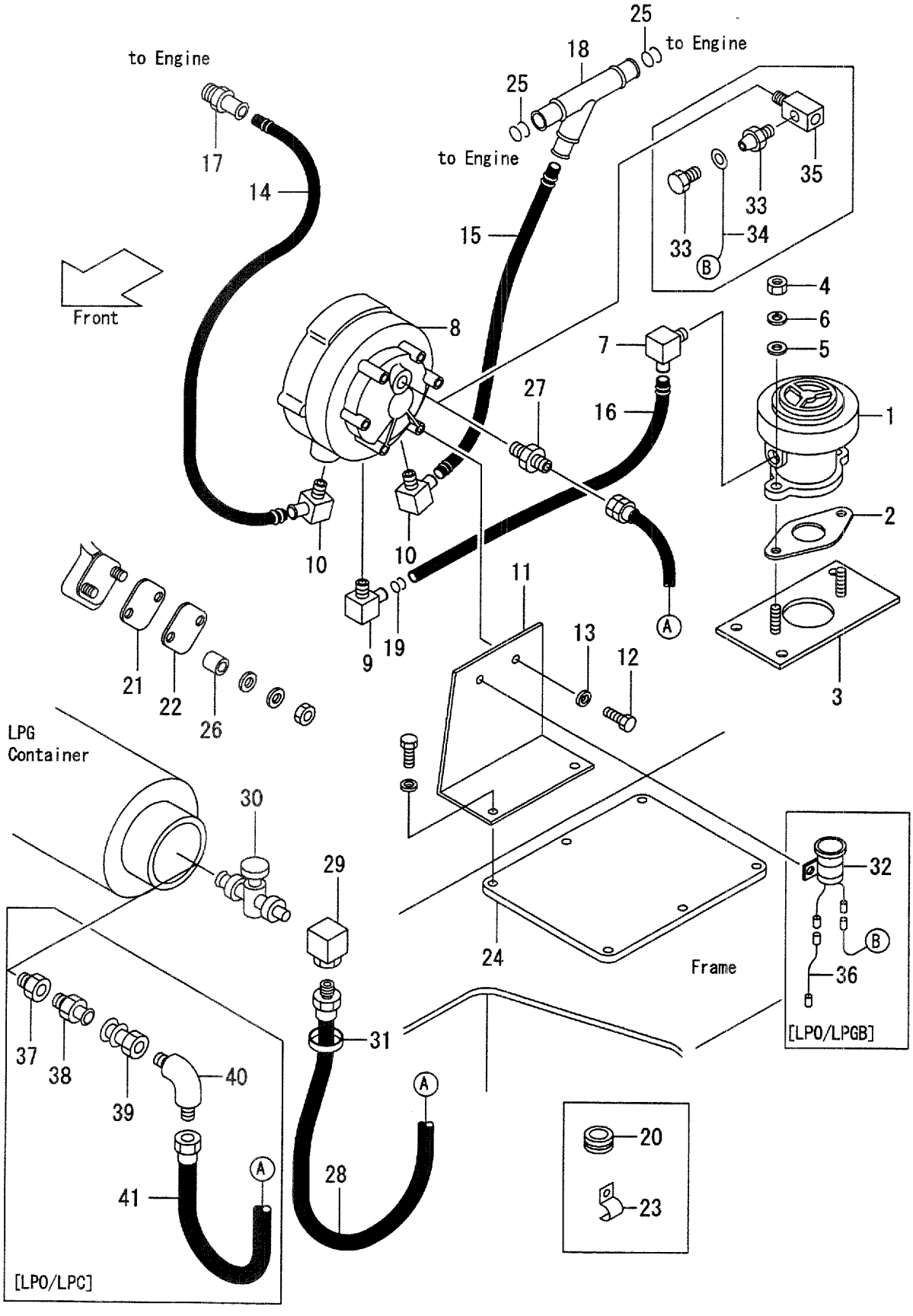

A:FD35C8 D:FD40T8 G:FD50T8 K:FG45T8:1-308
B:FD35T8 E:FD45C8 H:FG35T8:1-308 L:FG50T8:1-128
C:FD40C8 F:FD45T8 J:FG40T8:1-308

FIG.143
(F4049330)

Item No	Part No.	Mark	Description	Req'd	Remarks : Serial No.
K2	535L0-50201		KIT,BUZZER ﾌﾞｻﾞｰｷｯﾄ	1	H,J,K:1-107 L:1-102 [LPO/LPGB] INC.27,32-34
-	533A0-50351		KIT,BUZZER ﾌﾞｻﾞｰｷｯﾄ	1	H,J,K:108- L:103- [LPO/LPGB] INC.27,32-34

FIG.143A LPO SYSTEM [LPO]

(F4049331) LPOシステム

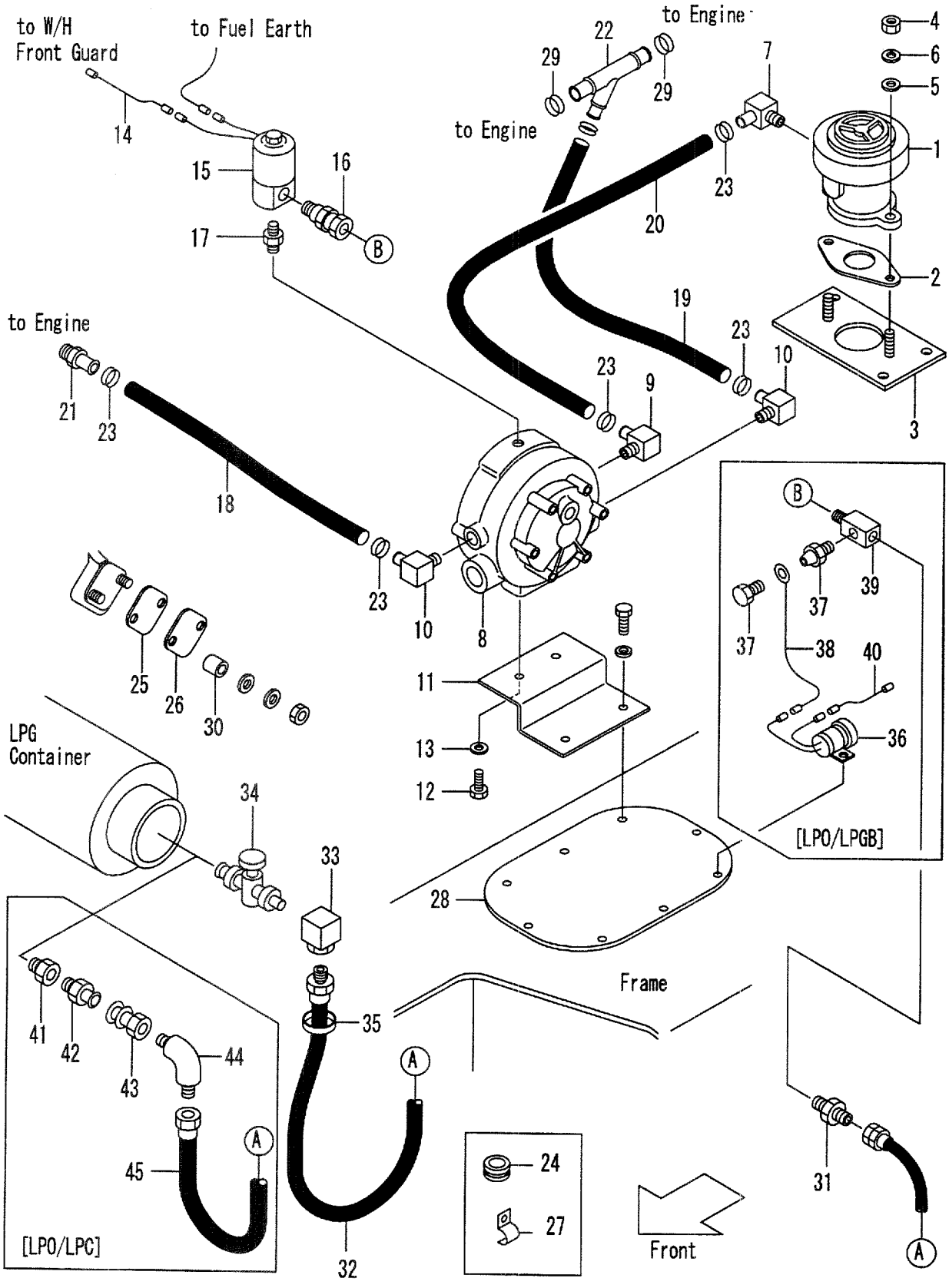

A:FD35C8 D:FD40T8 G:FD50T8 K:FG45T8:309-
B:FD35T8 E:FD45C8 H:FG35T8:309- L:FG50T8:129-
C:FD40C8 F:FD45T8 J:FG40T8:309-

FIG.143A
(F4049331)

Item No	Part No.	Mark	Description		Req'd	Remarks : Serial No.
A1	523W0-50201		CARBURETOR-ASSY	ｷｬﾌﾞﾚﾀｱｯｾﾝ	1	H,J,K,L [LPO] INC.1-7
1	523W0-52021	*	CARBURETOR	ｷｬﾌﾞﾚﾀ	1	H,J,K,L [LPO]SEE FIG.144
2	52580-53031	*	GASKET	ｶﾞｽｹｯﾄ	1	H,J,K,L [LPO]
3	523W0-52011	*	ADAPTER,THROTTLE	ｱﾀﾞﾌﾟﾀ	1	H,J,K,L [LPO]
4	01400-00008	*	NUT	ﾅｯﾄ	2	H,J,K,L [LPO]
5	02000-00008	*	WASHER	ﾜｯｼｬ	2	H,J,K,L [LPO]
6	02010-00008	*	WASHER	ﾜｯｼｬ	2	H,J,K,L [LPO]
7	54240-52021	*	ELBOW	ｴﾙﾎﾞ	1	H,J,K,L [LPO]
A2	523W0-50212		CONVERTER-ASSY	ｺﾝﾊﾞｰﾀｱｯｾﾝ	1	H,J,K,L [LPO] INC.8-17
8	528F0-52221	*	CONVERTER	ｺﾝﾊﾞｰﾀ	1	H,J,K,L [LPO]SEE FIG.145A
9	54240-52021	*	ELBOW	ｴﾙﾎﾞ	1	H,J,K,L [LPO]
10	528F0-52461	*	ELBOW	ｴﾙﾎﾞ	2	H,J,K,L [LPO]
11	523W0-52002	*	BRACKET	ﾌﾞﾗｹｯﾄ	1	H,J,K,L [LPO]
12	80110-00410	*	BOLT	ﾎﾞﾙﾄ	2	H,J,K,L [LPO]
13	80430-00004	*	WASHER	ﾜｯｼｬ	2	H,J,K,L [LPO]
14	535L0-52271	*	WIRE,LEAD	ﾜｲﾔ	1	H,J,K,L [LPO]
15	535L0-52261	*	VALVE,SOLENOID	ﾊﾞﾙﾌﾞ	1	H,J,K,L [LPO]
16	535L0-52251	*	FILTER	ﾌｲﾙﾀ	1	H,J,K,L [LPO]
17	528F0-52251	*	NIPPLE	ﾆｯﾌﾟﾙ	1	H,J,K,L [LPO]
18	523W0-52122	*	HOSE,WATER,L-250	ﾎｰｽ	1	H,J,K,L [LPO]
19	523W0-52131	*	HOSE,WATER,L-550	ﾎｰｽ	1	H,J,K,L [LPO]
20	523W0-52141	*	HOSE,WATER,L-600	ﾎｰｽ	1	H,J,K,L [LPO]
21	523W0-52101	*	NIPPLE	ﾆｯﾌﾟﾙ	1	H,J,K,L [LPO]
22	523W0-52111	*	TEE	ﾃｨｰ	1	H,J,K,L [LPO]
23	52050-53141	*	BAND	ﾊﾞﾝﾄﾞ	6	H,J,K,L [LPO]

FIG.143A LPO SYSTEM [LPO]

(F4049331) LPOシステム

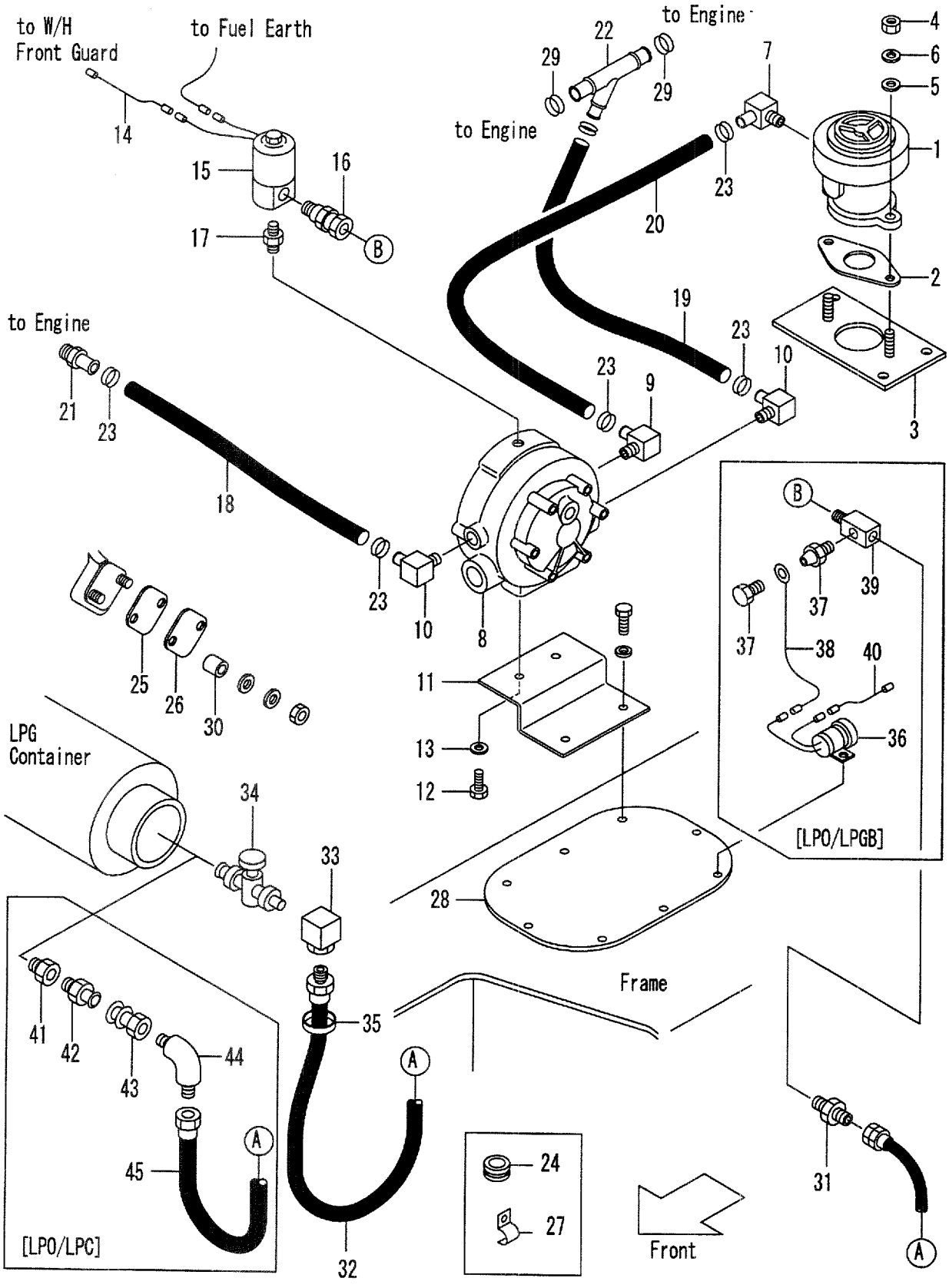

A:FD35C8 D:FD40T8 G:FD50T8 K:FG45T8:309-
B:FD35T8 E:FD45C8 H:FG35T8:309- L:FG50T8:129-
C:FD40C8 F:FD45T8 J:FG40T8:309-

FIG.143A
(F4049331)

Item No	Part No.	Mark	Description		Req'd	Remarks : Serial No.
24	52050-53171	*	GROMMET	ｸﾞﾛﾒｯﾄ	1	H,J,K,L [LPO]
25	53320-52322	*	GASKET	ｶﾞｽｹｯﾄ	1	H,J,K,L [LPO]
26	53320-52331	*	PLATE	ﾌﾟﾚｰﾄ	1	H,J,K,L [LPO]
27	51230-52091	*	CLAMP	ｸﾗﾝﾌﾟ	1	H,J,K,L [LPO]
28	533A0-52002		COVER	ｶﾊﾞｰ	1	H,J,K,L [LPO]
29	04911-00028		BAND	ﾊﾞﾝﾄﾞ	2	H,J,K,L [LPO]
30	53651-12201		SPACER	ｽﾍﾟｰｻ	2	H,J,K,L [LPO]
31	51240-52131	*	NIPPLE	ﾆｯﾌﾟﾙ	1	H,J,K,L [LPO](WITH BOMB)
-	533A0-52141	*	ELBOW	ｴﾙﾎﾞ	1	H,J,K,L [LPO/LPGB]
-	51240-52151		ELBOW	ｴﾙﾎﾞ	1	H,J,K,L [LPO/LPC]
32	523W0-52231		HOSE	ﾎｰｽ	1	H,J,K,L [LPO](WITH BOMB)
33	51240-52151		ELBOW	ｴﾙﾎﾞ	1	H,J,K,L [LPO](WITH BOMB)
34	51240-52481		VALVE	ﾊﾞﾙﾌﾞ	1	H,J,K,L [LPO](WITH BOMB)
35	22679-47301		GROMMET	ｸﾞﾛﾒｯﾄ	1	H,J,K,L [LPO]
36	51240-52441	*	BUZZER	ﾌﾞｻﾞｰ	1	H,J,K,L [LPO/LPGB]
37	51240-52451	*	SWITCH	ｽｲｯﾁ	1	H,J,K,L [LPO/LPGB]
38	51240-52491	*	WIRE-HARNESS	ﾜｲﾔﾊｰﾈｽ	1	H,J,K,L [LPO/LPGB]
39	51240-52551		NIPPLE	ﾆｯﾌﾟﾙ	1	H,J,K,L [LPO/LPGB]
40	55811-42001		WIRE,LEAD	ﾜｲﾔ	1	H,J,K,L [LPO/LPGB]
A3	51240-52411		PLUG-ASSY	ﾌﾟﾗｸﾞｱｯｾﾝ	1	H,J,K,L [LPO/LPC] INC.41,42
41	51240-52521		ADAPTER	ｱﾀﾞﾌﾟﾀ	1	H,J,K,L [LPO/LPC]
42	51240-52531		PLUG	ﾌﾟﾗｸﾞ	1	H,J,K,L [LPO/LPC]
A4	51240-52421		SOCKET-ASSY	ｿｹｯﾄｱｯｾﾝ	1	H,J,K,L [LPO/LPC] INC.43,44
43	51240-52511		SOCKET	ｿｹｯﾄ	1	H,J,K,L [LPO/LPC]
44	51240-52501		ELBOW	ｴﾙﾎﾞ	1	H,J,K,L [LPO/LPC]

FIG.143A LPO SYSTEM [LPO]

(F4049331) LPOシステム

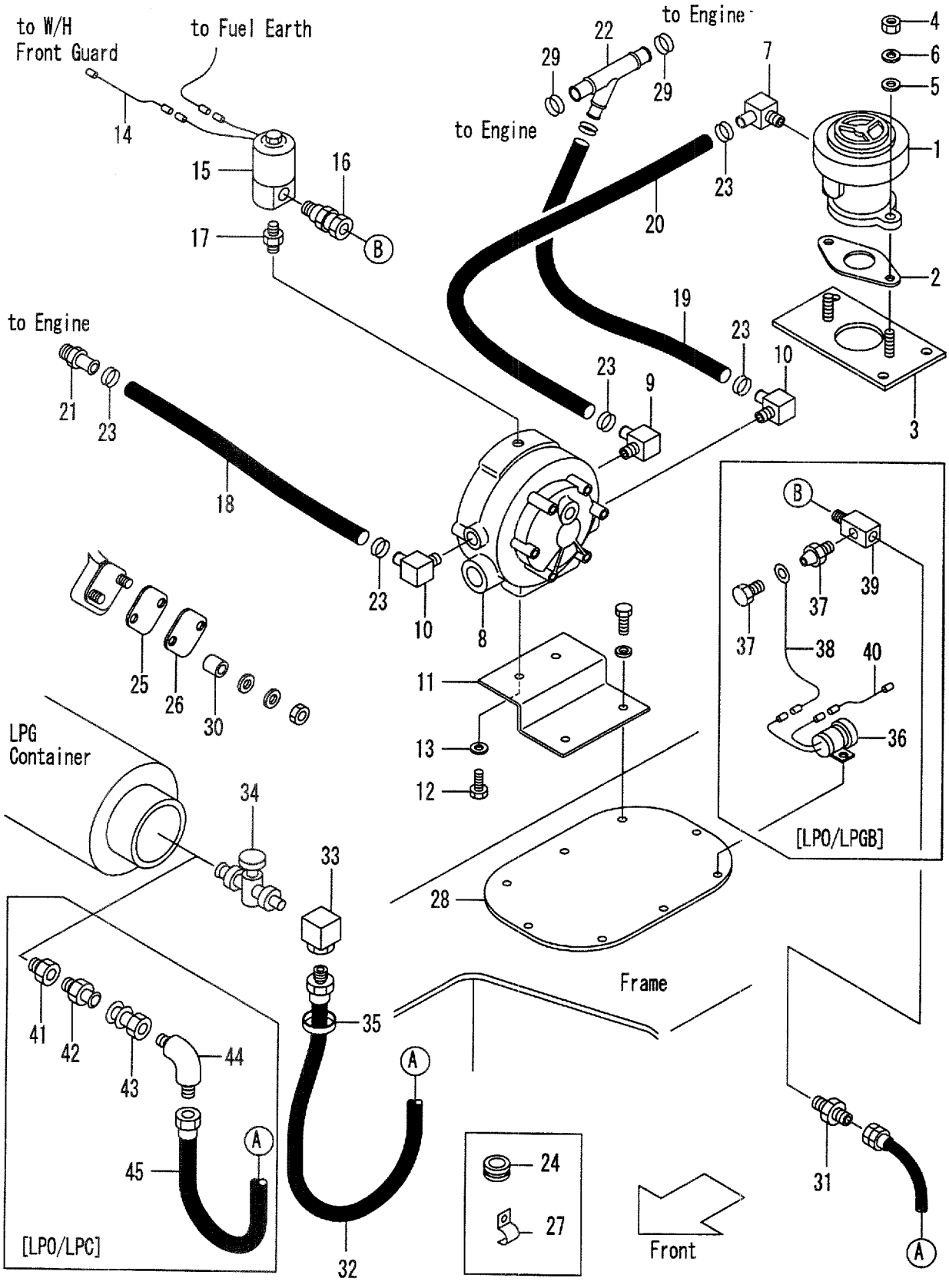

A:FD35C8 D:FD40T8 G:FD50T8 K:FG45T8:309-
B:FD35T8 E:FD45C8 H:FG35T8:309- L:FG50T8:129-
C:FD40C8 F:FD45T8 J:FG40T8:309-

FIG.143A
(F4049331)

Item No	Part No.	Mark	Description		Req'd	Remarks : Serial No.
45	51240-52161		HOSE	ホース	1	H,J,K,L [LPO/LPC]
-	533A0-52121		HOSE,VINYL	ホース	1	H,J,K,L [LPO/LPC]
K1	523W0-50101		KIT,LPO	LPOｷｯﾄ	1	H,J,K,L [LPO] INC.1-27
K2	533A0-50351		KIT,BUZZER	ﾌﾞｻﾞｰｷｯﾄ	1	H,J,K,L [LPO/LPGB] INC.31,36-38

FIG.144 CARBURATOR [LPO]

(F4049340) キャブレタ

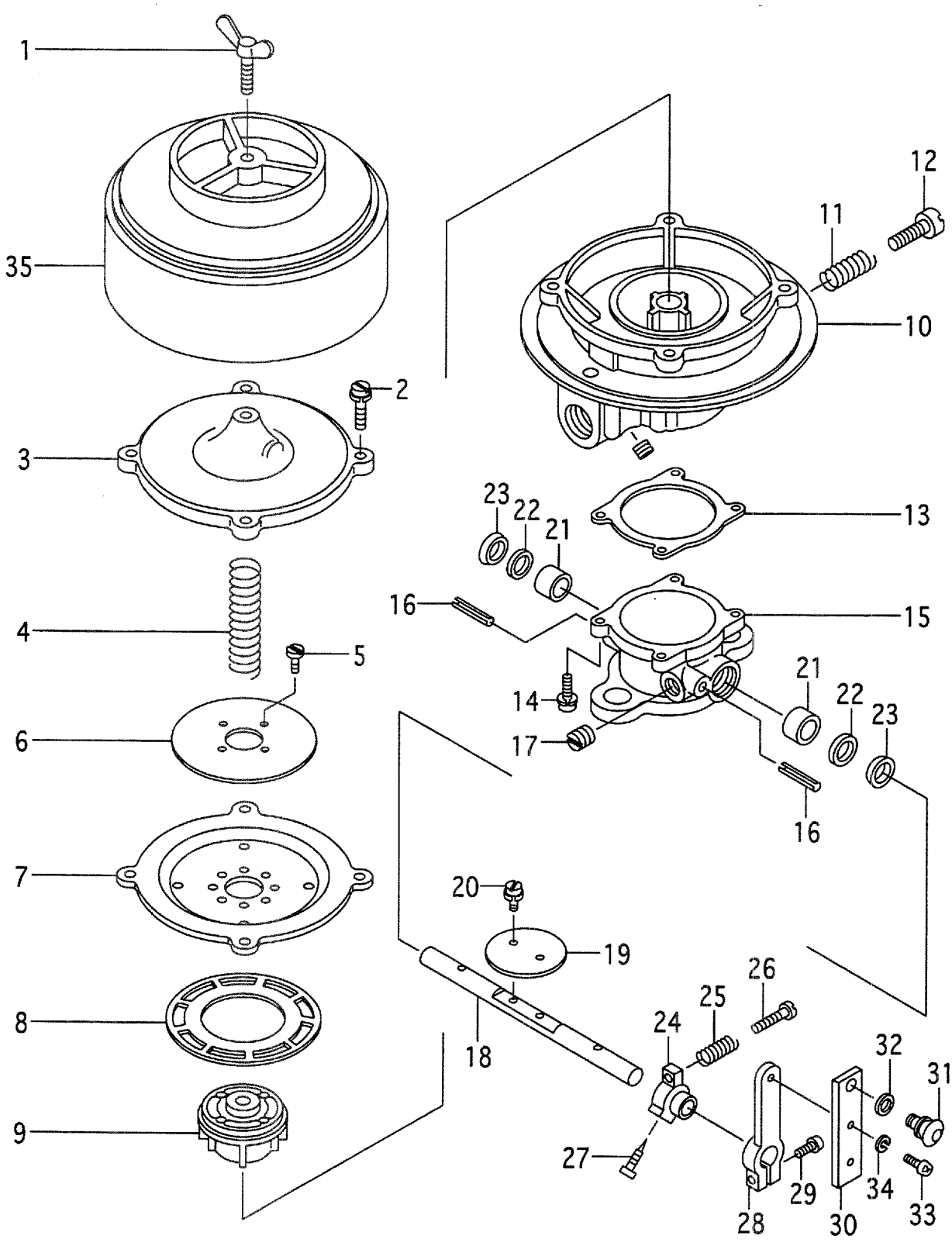

A:FD35C8 D:FD40T8 G:FD50T8 K:FG45T8
B:FD35T8 E:FD45C8 H:FG35T8 L:FG50T8
C:FD40C8 F:FD45T8 J:FG40T8

FIG.144
(F4049340)

Item No	Part No.	Mark	Description		Req'd	Remarks : Serial No.
A1	523W0-52021		CARBURETOR-ASSY	ｷｬﾌﾞﾚﾀｱｯｾﾝ	1	H,J,K,L [LPO] INC.1-35
1	523W0-52151		BOLT,STUD	ﾎﾞﾙﾄ	1	H,J,K,L [LPO]
2	53320-55411		SCREW	ｽｸﾘｭ	4	H,J,K,L [LPO]
3	53320-55421		COVER	ｶﾊﾞｰ	1	H,J,K,L [LPO]
4	53320-55431		SPRING	ｽﾌﾟﾘﾝｸﾞ	1	H,J,K,L [LPO]
A2	53320-55481		DIAPHRAGM-ASSY,VALVE	ﾀﾞｲｱﾌﾗﾑｱｯｾﾝ	1	H,J,K,L [LPO] INC.5-9
5	53320-55441		SCREW	ｽｸﾘｭ	4	H,J,K,L [LPO]
6	53320-55451		PLATE	ﾌﾟﾚｰﾄ	1	H,J,K,L [LPO]
7	52050-59871		DIAPHRAGM	ﾀﾞｲｱﾌﾗﾑ	1	H,J,K,L [LPO]
8	53320-55461		RING	ﾘﾝｸﾞ	1	H,J,K,L [LPO]
9	53320-55471		VALVE,AIR,GAS	ﾊﾞﾙﾌﾞ	1	H,J,K,L [LPO]
10	53320-55491		BODY	ﾎﾞﾃﾞｨ	1	H,J,K,L [LPO]
11	53320-55501		SPRING	ｽﾌﾟﾘﾝｸﾞ	1	H,J,K,L [LPO]
12	53320-55511		SCREW	ｽｸﾘｭ	1	H,J,K,L [LPO]
13	53320-55521		GASKET	ｶﾞｽｹｯﾄ	1	H,J,K,L [LPO]
14	53320-55181		SCREW	ｽｸﾘｭ	4	H,J,K,L [LPO]
A3	53320-55761		THROTTLE-ASSY	ｽﾛｯﾄﾙｱｯｾﾝ	1	H,J,K,L [LPO] INC.15-27
15	523W0-52191		THROAT	ｽﾛｰﾄ	1	H,J,K,L [LPO]
16	53320-55541		PIN	ﾋﾟﾝ	2	H,J,K,L [LPO]
17	53320-55551		PLUG	ﾌﾟﾗｸﾞ	1	H,J,K,L [LPO]
18	53320-55561		SHAFT	ｼｬﾌﾄ	1	H,J,K,L [LPO]
19	523W0-52201		FLY	ﾌﾗｲ	1	H,J,K,L [LPO]
20	53320-55131		SCREW	ｽｸﾘｭ	2	H,J,K,L [LPO]
21	53320-55581		BUSHING	ﾌﾞｯｼﾝｸﾞ	2	H,J,K,L [LPO]
22	53320-55591		SEAL	ｼｰﾙ	2	H,J,K,L [LPO]

FIG.144 CARBURATOR [LPO]

(F4049340) キャブレタ

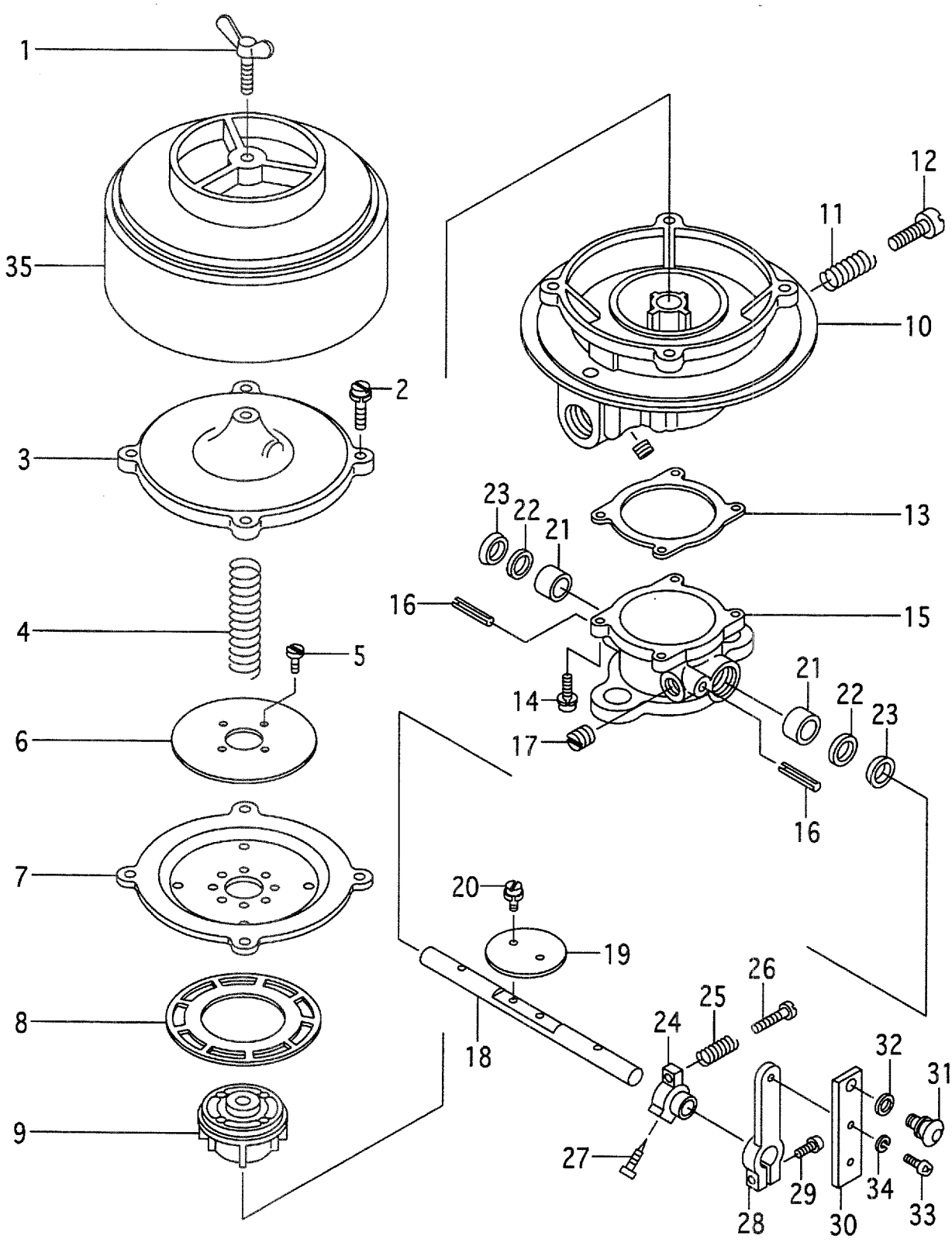

A:FD35C8 D:FD40T8 G:FD50T8 K:FG45T8
B:FD35T8 E:FD45C8 H:FG35T8 L:FG50T8
C:FD40C8 F:FD45T8 J:FG40T8

FIG.144
(F4049340)

Item No	Part No.	Mark	Description		Req'd	Remarks : Serial No.
23	53320-55601		RING	ﾘﾝｸﾞ	2	H,J,K,L [LPO]
A4	53320-55621		THROTTLE-ASSY,STOP	ｽﾛｯﾄﾙｱｯｾﾝ	1	H,J,K,L [LPO] INC.24-27
24	53320-55612		LEVER,THROTTLE-STOP	ﾚﾊﾞｰ	1	H,J,K,L [LPO]
25	53320-55631		SPRING	ｽﾌﾟﾘﾝｸﾞ	1	H,J,K,L [LPO]
26	53320-55641		SCREW	ｽｸﾘｭ	1	H,J,K,L [LPO]
27	53320-55651		SCREW	ｽｸﾘｭ	1	H,J,K,L [LPO]
28	523W0-52051		LEVER,RETURN-SPRING	ﾚﾊﾞｰ	1	H,J,K,L [LPO] INC.29
29	53320-55671		SCREW	ｽｸﾘｭ	1	H,J,K,L [LPO]
30	523W0-52061		BRACKET	ﾌﾞﾗｹｯﾄ	1	H,J,K,L [LPO]
31	523W0-52041		BALL	ﾎﾞｰﾙ	1	H,J,K,L [LPO]
32	02010-00006		WASHER	ﾜｯｼｬ	1	H,J,K,L [LPO]
33	01030-05010		SCREW	ｽｸﾘｭ	1	H,J,K,L [LPO]
34	02010-00005		WASHER	ﾜｯｼｬ	1	H,J,K,L [LPO]
35	523W0-52031		HORN,AIR	ﾎｰﾝ	1	H,J,K,L [LPO]

FIG.145 CONVERTER [LPO]

(F4049350) コンバータ

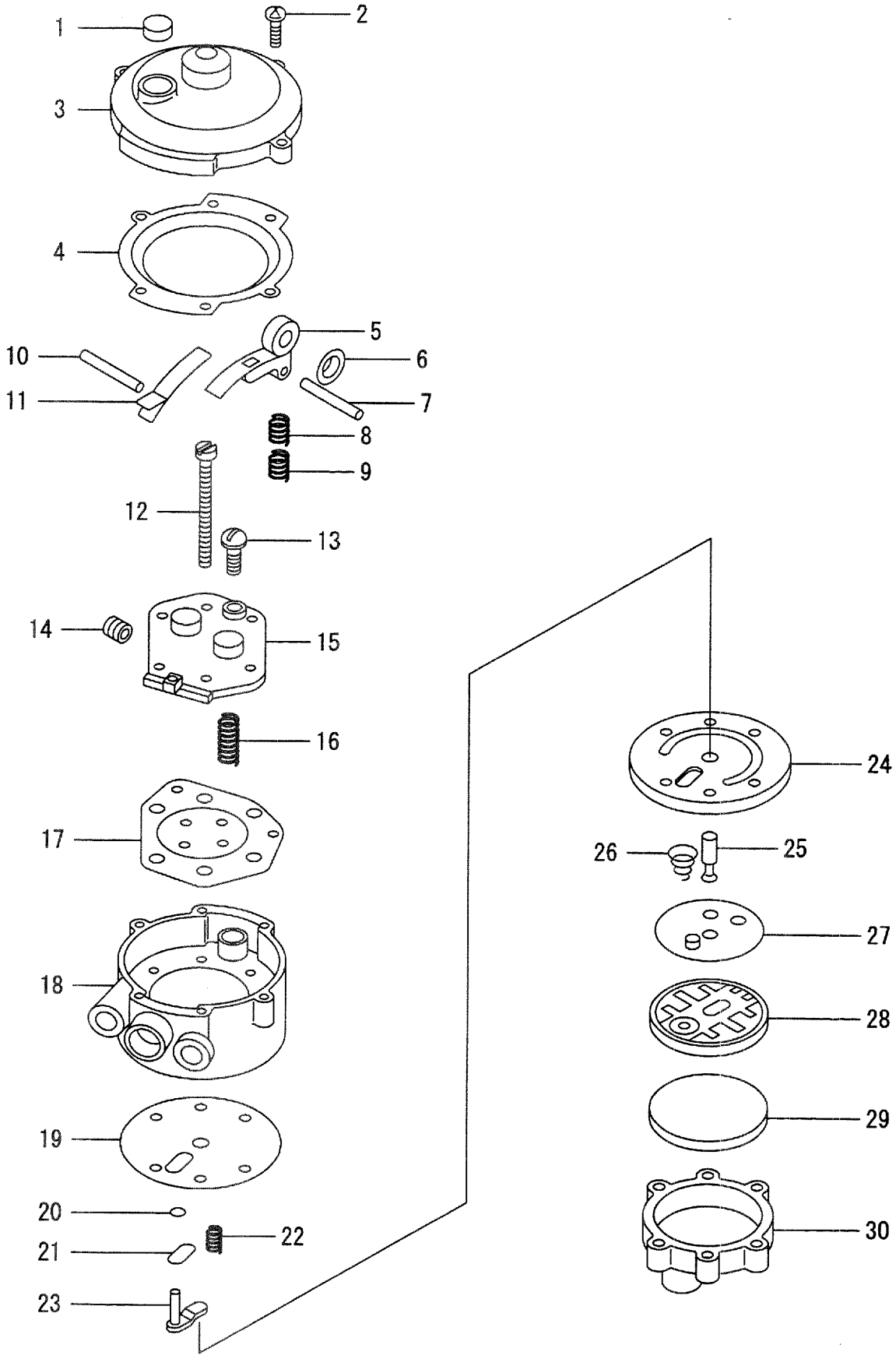

A:FD35C8 D:FD40T8 G:FD50T8 K:FG45T8:1-308
B:FD35T8 E:FD45C8 H:FG35T8:1-308 L:FG50T8:1-128
C:FD40C8 F:FD45T8 J:FG40T8:1-308

FIG.145
(F4049350)

Item No	Part No.	Mark	Description		Req'd	Remarks : Serial No.
A1	523W0-52071		CONVERTER-ASSY	ｺﾝﾊﾞｰﾀｱｯｾﾝ	1	H,J,K,L [LPO] INC.1-30
1	523W0-52301		SCREEN	ｽｸﾘｰﾝ	1	H,J,K,L [LPO]
2	523W0-52311		SCREW	ｽｸﾘｭ	2	H,J,K,L [LPO]
3	523W0-52321		COVER	ｶﾊﾞｰ	1	H,J,K,L [LPO]
4	523W0-52331		DIAPHRAGM	ﾀﾞｲｱﾌﾗﾑ	1	H,J,K,L [LPO]
5	523W0-52341		LEVER	ﾚﾊﾞｰ	1	H,J,K,L [LPO]
6	523W0-52351		VALVE	ﾊﾞﾙﾌﾞ	1	H,J,K,L [LPO]
7	523W0-52361		PIN	ﾋﾟﾝ	1	H,J,K,L [LPO]
8	523W0-52371		SPRING	ｽﾌﾟﾘﾝｸﾞ	1	H,J,K,L [LPO]
9	523W0-52381		SPRING	ｽﾌﾟﾘﾝｸﾞ	1	H,J,K,L [LPO]
10	523W0-52391		PIN	ﾋﾟﾝ	1	H,J,K,L [LPO]
11	523W0-52401		LEVER	ﾚﾊﾞｰ	1	H,J,K,L [LPO]
12	523W0-52411		SCREW	ｽｸﾘｭ	6	H,J,K,L [LPO]
13	523W0-52421		SCREW	ｽｸﾘｭ	1	H,J,K,L [LPO]
14	523W0-52431		SCREW	ｽｸﾘｭ	1	H,J,K,L [LPO]
15	523W0-52441		COVER	ｶﾊﾞｰ	1	H,J,K,L [LPO]
16	523W0-52451		SPRING	ｽﾌﾟﾘﾝｸﾞ	2	H,J,K,L [LPO]
17	523W0-52461		DIAPHRAGM	ﾀﾞｲｱﾌﾗﾑ	1	H,J,K,L [LPO]
18	523W0-52471		BODY	ﾎﾞﾃﾞｨ	1	H,J,K,L [LPO]
19	523W0-52481		GASKET	ｶﾞｽｹｯﾄ	1	H,J,K,L [LPO]
20	523W0-52491		O-RING	Oﾘﾝｸﾞ	1	H,J,K,L [LPO]
21	523W0-52501		O-RING	Oﾘﾝｸﾞ	1	H,J,K,L [LPO]
22	523W0-52511		SPRING	ｽﾌﾟﾘﾝｸﾞ	1	H,J,K,L [LPO]
23	523W0-52521		LEVER	ﾚﾊﾞｰ	1	H,J,K,L [LPO]
24	523W0-52531		PLATE	ﾌﾟﾚｰﾄ	1	H,J,K,L [LPO]

FIG.145 CONVERTER [LPO]

(F4049350) コンバータ

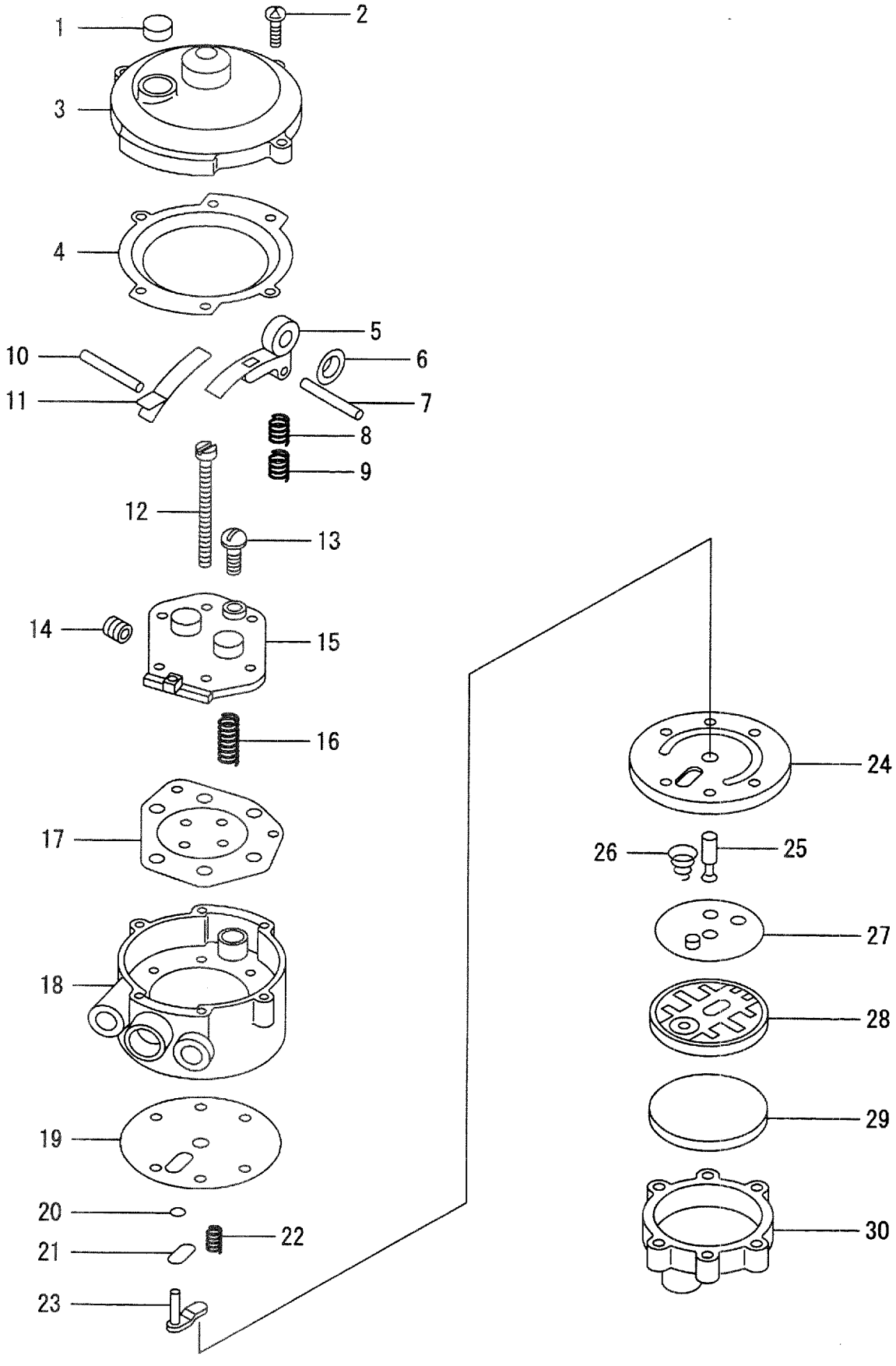

A:FD35C8 D:FD40T8 G:FD50T8 K:FG45T8:1-308
B:FD35T8 E:FD45C8 H:FG35T8:1-308 L:FG50T8:1-128
C:FD40C8 F:FD45T8 J:FG40T8:1-308

FIG.145
(F4049350)

Item No	Part No.	Mark	Description		Req'd	Remarks : Serial No.
25	523W0-52541		VALVE	ﾊﾞﾙﾌﾞ	1	H,J,K,L [LPO]
26	523W0-52551		SPRING	ｽﾌﾟﾘﾝｸﾞ	1	H,J,K,L [LPO]
27	523W0-52561		DIAPHRAGM	ﾀﾞｲｱﾌﾗﾑ	1	H,J,K,L [LPO]
28	523W0-52571		PLATE	ﾌﾟﾚｰﾄ	1	H,J,K,L [LPO]
29	523W0-52581		FILTER	ﾌｲﾙﾀ	1	H,J,K,L [LPO]
30	523W0-52591		COVER	ｶﾊﾞｰ	1	H,J,K,L [LPO]

FIG.145A CONVERTER [LPO]

(F4049351) コンバータ

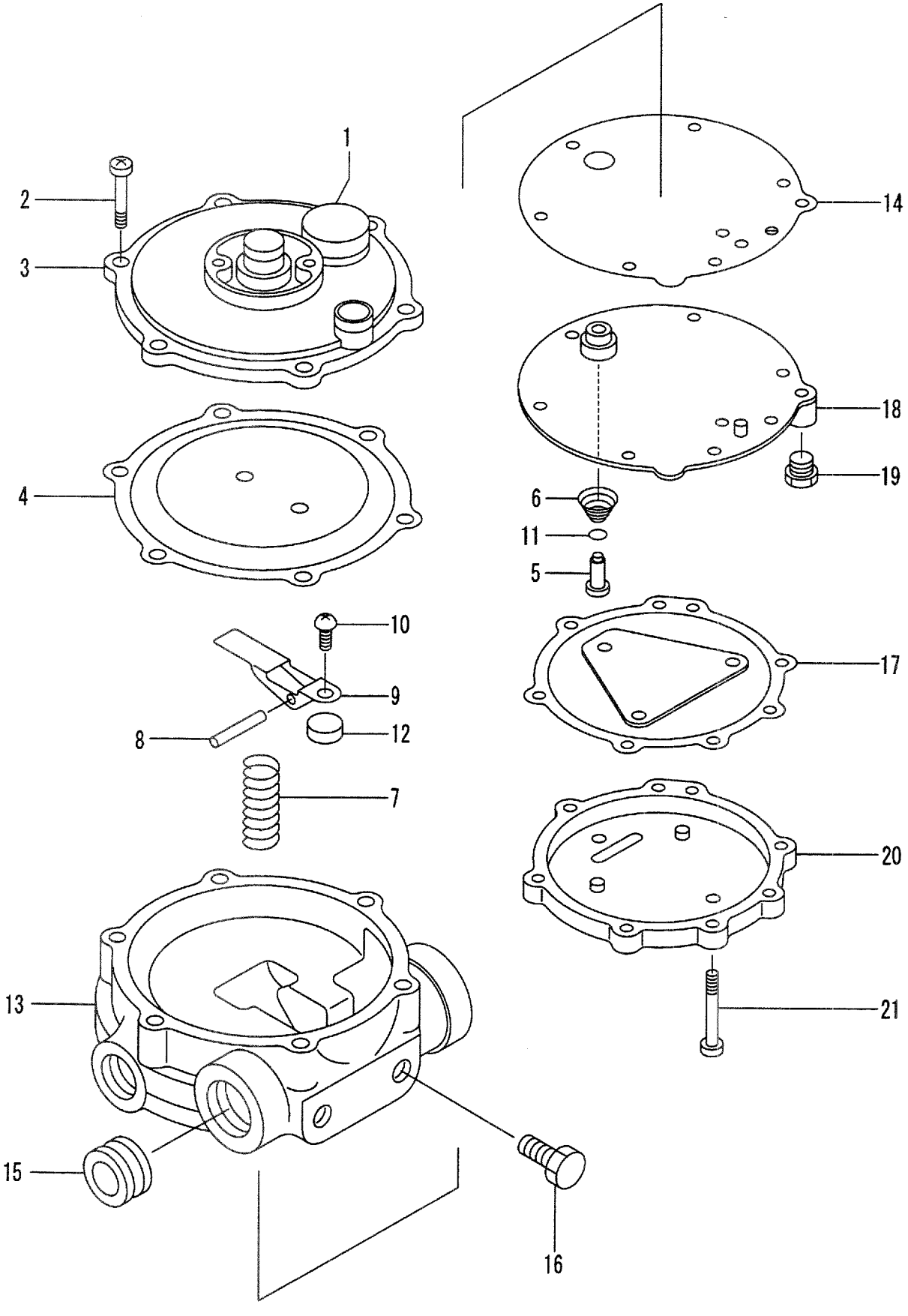

A:FD35C8 D:FD40T8 G:FD50T8 K:FG45T8:309-
B:FD35T8 E:FD45C8 H:FG35T8:309- L:FG50T8:129-
C:FD40C8 F:FD45T8 J:FG40T8:309-

FIG.145A
(F4049351)

Item No	Part No.	Mark	Description		Req'd	Remarks : Serial No.
A1	528F0-52221		CONVERTER-ASSY	ｺﾝﾊﾞｰﾀｱｯｾﾝ	1	H,J,K,L [LPO] INC.1-21
1	53320-55201		SCREEN	ｽｸﾘｰﾝ	1	H,J,K,L [LPO]
2	53320-55001	*	SCREW	ｽｸﾘｭ	6	H,J,K,L [LPO]
3	528F0-52511		COVER	ｶﾊﾞｰ	1	H,J,K,L [LPO]
4	53320-55221	*	DIAPHRAGM	ﾀﾞｲｱﾌﾗﾑ	1	H,J,K,L [LPO]
5	528F0-52551	*	PIN	ﾋﾟﾝ	1	H,J,K,L [LPO]
6	528F0-52581		SPRING	ｽﾌﾟﾘﾝｸﾞ	1	H,J,K,L [LPO]
7	53320-55281		SPRING	ｽﾌﾟﾘﾝｸﾞ	1	H,J,K,L [LPO]
8	53320-55251		PIN	ﾋﾟﾝ	1	H,J,K,L [LPO]
9	53320-55241		LEVER	ﾚﾊﾞｰ	1	H,J,K,L [LPO]
10	53320-55231	*	SCREW	ｽｸﾘｭ	1	H,J,K,L [LPO]
11	528F0-52591		O-RING	Oﾘﾝｸﾞ	1	H,J,K,L [LPO]
12	528F0-52601	*	SEAT	ｼｰﾄ	1	H,J,K,L [LPO]
13	528F0-52501		BODY	ﾎﾞﾃﾞｨ	1	H,J,K,L [LPO]
14	528F0-52541	*	GASKET	ｶﾞｽｹｯﾄ	1	H,J,K,L [LPO]
15	528F0-52571		PLUG	ﾌﾟﾗｸﾞ	1	H,J,K,L [LPO]
16	53320-55071		SCREW	ｽｸﾘｭ	2	H,J,K,L [LPO]
17	528F0-52521	*	DIAPHRAGM	ﾀﾞｲｱﾌﾗﾑ	1	H,J,K,L [LPO]
18	528F0-52561		PLATE	ﾌﾟﾚｰﾄ	1	H,J,K,L [LPO]
19	53320-55331		PLUG	ﾌﾟﾗｸﾞ	1	H,J,K,L [LPO]
20	528F0-52531		COVER	ｶﾊﾞｰ	1	H,J,K,L [LPO]
21	53320-55381	*	SCREW	ｽｸﾘｭ	7	H,J,K,L [LPO]
K1	528F0-52011		KIT,REPAIR	ﾘﾍﾟｱｷｯﾄ	1	H,J,K,L [LPO] INC.2,4,5,10,12,14,17,21

FIG.146 LPG CONTAINER [LPG][LPO]

(F4049360) LPGｺﾝﾃﾅ

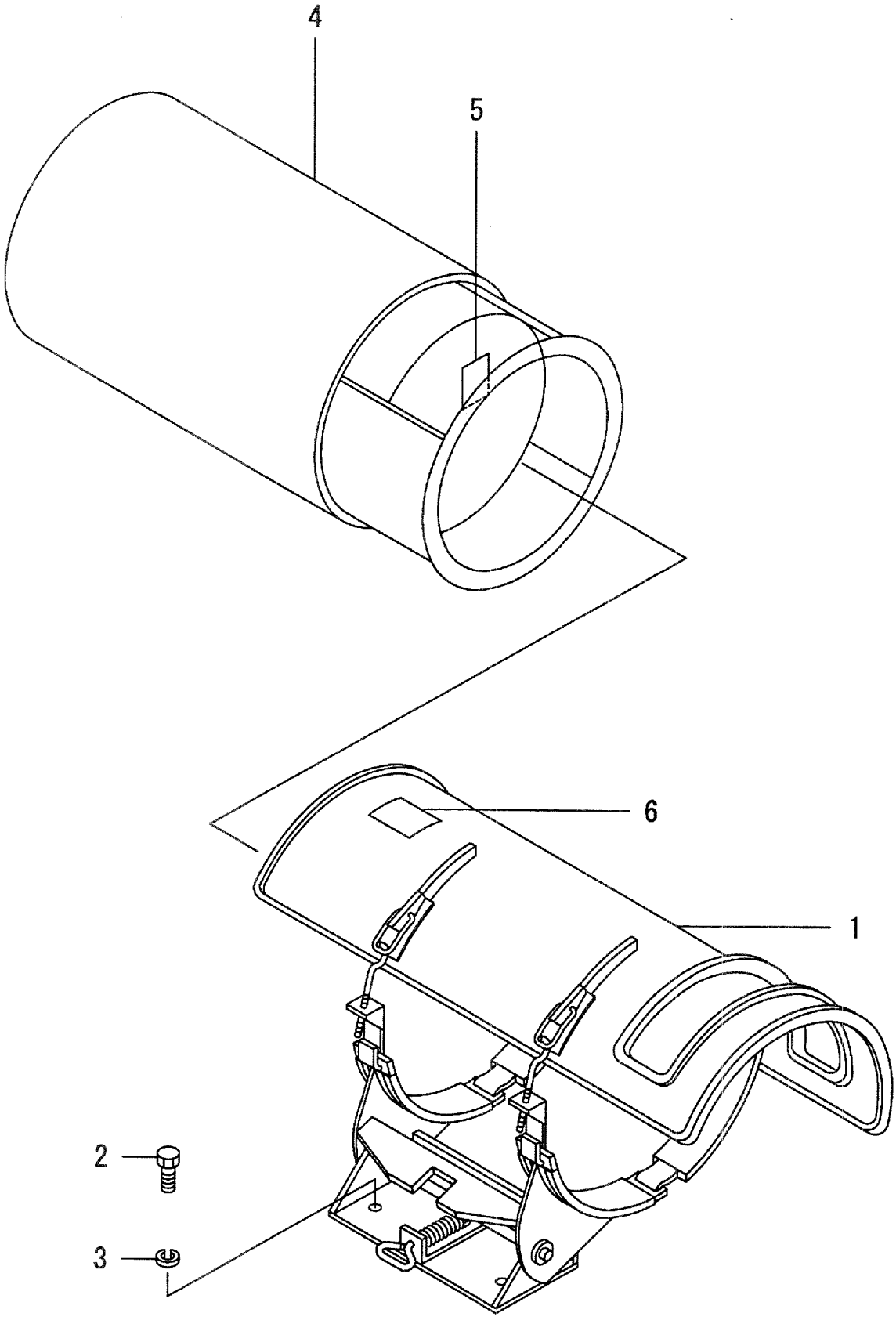

A:FD35C8 D:FD40T8 G:FD50T8 K:FG45T8
B:FD35T8 E:FD45C8 H:FG35T8 L:FG50T8
C:FD40C8 F:FD45T8 J:FG40T8

FIG.146
(F4049360)

Item No	Part No.	Mark	Description		Req'd	Remarks : Serial No.
1	51240-50401		BRACKET	ﾌﾞﾗｹｯﾄ	1	H,J,K,L [LPG][LPO]
2	01184-10040		BOLT	ﾎﾞﾙﾄ	4	H,J,K,L [LPG][LPO]
3	02000-00010		WASHER	ﾜｯｼｬ	4	H,J,K,L [LPG][LPO]
4	52430-52551		CONTAINER,LPG	ｺﾝﾃﾅ	1	H,J,K,L [LPG][LPO](15KG)
-	54230-52171		CONTAINER,LPG	ｺﾝﾃﾅ	1	H,J,K,L [LPG][LPO](15KG) (WITH/METER)
-	53030-52351		CONTAINER,LPG	ｺﾝﾃﾅ	1	H,J,K,L [LPG][LPO](20KG) (WITH/METER)
-	521A0-52101		CONTAINER,LPG	ｺﾝﾃﾅ	1	H,J,K,L [LPG][LPO](20KG)
5	53030-52321		DECAL	ﾃﾞｶﾙ	1	H,J,K,L [LPG][LPO]
6	513A0-52342		DECAL,CAUTION	ﾃﾞｶﾙ	1	H,J,K,L [LPG][LPO]
7	21240-52131	+	NIPPLE	ﾆｯﾌﾟﾙ	1	H,J,K,L [LPG/LPS][LPO/LPS] [LPG/LPSM][LPO/LPSM]
-	21240-52131	+	NIPPLE	ﾆｯﾌﾟﾙ	1	H,J,K,L [LPG/LPS20][LPO/LPS20] [LPG/LPSM20][LPO/LPSM20]
8	523W0-52231	+	HOSE	ﾎｰｽ	1	H,J,K,L [LPG/LPS][LPO/LPS] [LPG/LPSM][LPO/LPSM]
-	523W0-52231	+	HOSE	ﾎｰｽ	1	H,J,K,L [LPG/LPS20][LPO/LPS20] [LPG/LPSM20][LPO/LPSM20]
9	51240-52151	+	ELBOW	ｴﾙﾎﾞ	1	H,J,K,L [LPG/LPS][LPO/LPS] [LPG/LPSM][LPO/LPSM]
-	51240-52151	+	ELBOW	ｴﾙﾎﾞ	1	H,J,K,L [LPG/LPS20][LPO/LPS20] [LPG/LPSM20][LPO/LPSM20]
10	51240-52481	+	VALVE,STOP	ﾊﾞﾙﾌﾞ	1	H,J,K,L [LPG/LPS][LPO/LPS] [LPG/LPSM][LPO/LPSM]
-	51240-52481	+	VALVE,STOP	ﾊﾞﾙﾌﾞ	1	H,J,K,L [LPG/LPS20][LPO/LPS20] [LPG/LPSM20][LPO/LPSM20]

FIG.147 FIRE EXTINGUISHER [FE]

(F4049370) ﾌｧｲﾔｲｸｽﾃｨﾝｸﾞｲｯｼｬ

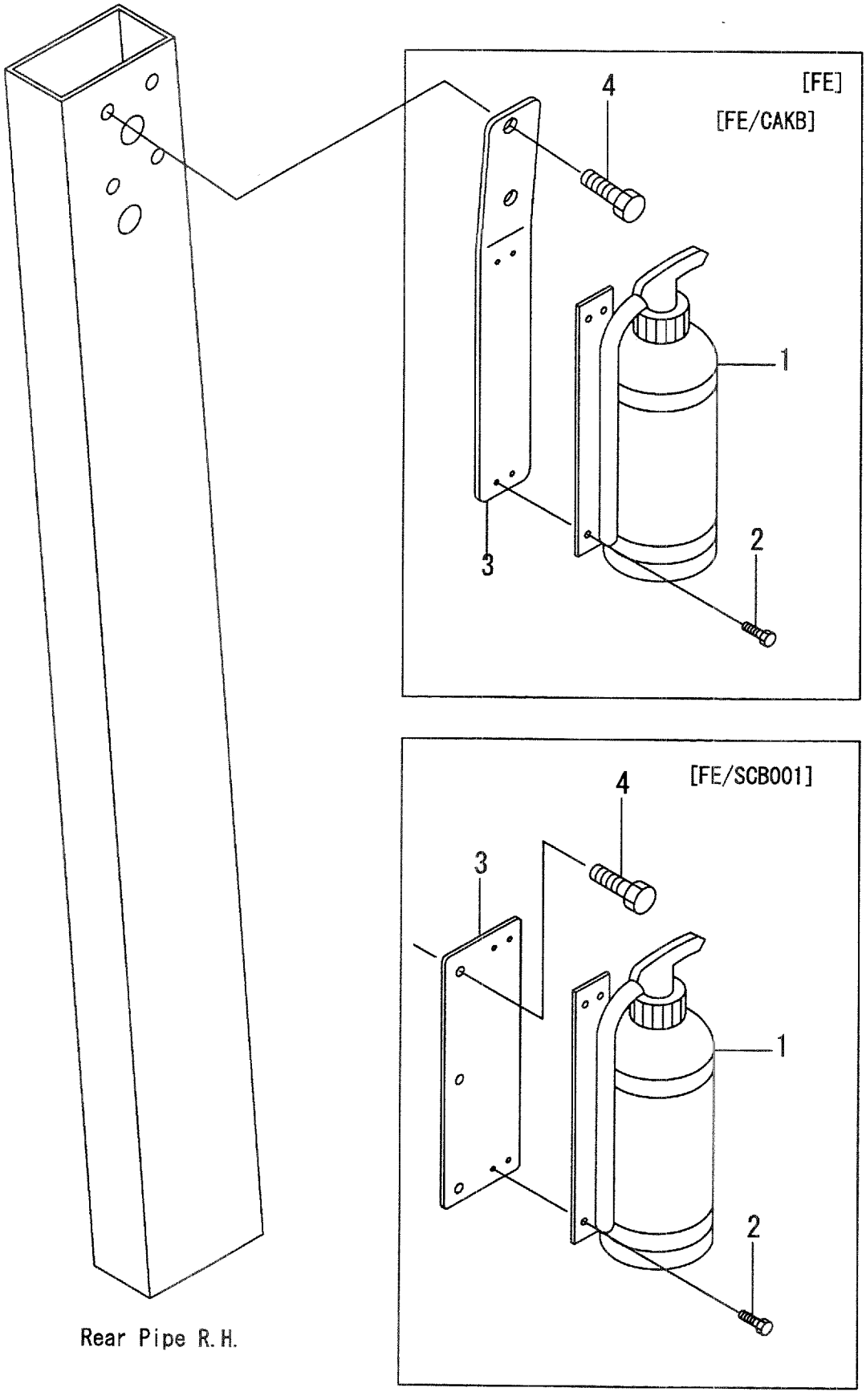

A:FD35C8 D:FD40T8 G:FD50T8 K:FG45T8
B:FD35T8 E:FD45C8 H:FG35T8 L:FG50T8
C:FD40C8 F:FD45T8 J:FG40T8

FIG.147
(F4049370)

Item No	Part No.	Mark	Description		Req'd	Remarks : Serial No.
1	22679-12102		EXTINGUISHER,FIRE	ｲｸｽﾃｨﾝｸﾞｲｯｼｬ	1	[FE]
2	01183-05012		BOLT	ﾎﾞﾙﾄ	4	[FE]
3	535C9-62001		BRACKET	ﾌﾞﾗｹｯﾄ	1	[FE][FE/CAKB]
-	530C5-33141		PLATE	ﾌﾟﾚｰﾄ	1	[FE/SCB001]
4	01186-12040		BOLT	ﾎﾞﾙﾄ	2	[FE]
-	01186-08020		BOLT	ﾎﾞﾙﾄ	3	[FE/SCB001]
-	01186-12020		BOLT	ﾎﾞﾙﾄ	2	[FE/CAKB]

FIG.148 CABIN MOUNT [SCB]

(F4049380) キャビネットマウント

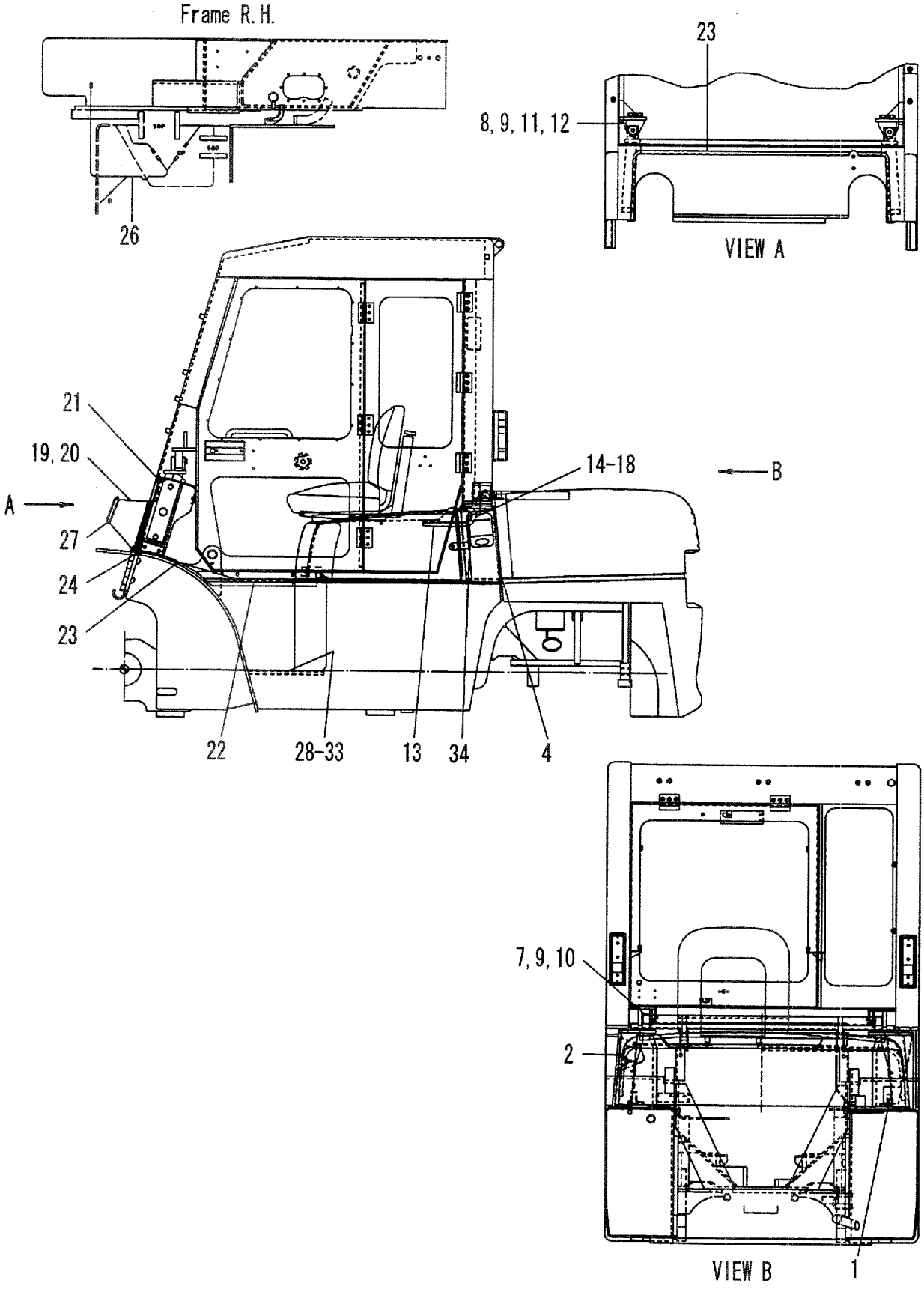

A:FD35C8 D:FD40T8 G:FD50T8 K:FG45T8
B:FD35T8 E:FD45C8 H:FG35T8 L:FG50T8
C:FD40C8 F:FD45T8 J:FG40T8

FIG.148
(F4049380)

Item No	Part No.	Mark	Description		Req'd	Remarks : Serial No.
1	535C5-30201		SUPPORT,RH	ｻﾎﾟｰﾄ	1	
2	535C5-30211		SUPPORT,LH	ｻﾎﾟｰﾄ	1	
3	524W5-12091	+	GROMMET	ｸﾞﾛﾒｯﾄ	1	
4	535C5-32061		RUBBER	ﾗﾊﾞｰ	2	
5	01103-16030	+	BOLT	ﾎﾞﾙﾄ	4	
6	02011-00016	+	WASHER	ﾜｯｼｬ	4	
7	534A5-32061		BUSHING	ﾌﾞｯｼﾝｸﾞ	2	
8	530C5-32061		BUSHING	ﾌﾞｯｼﾝｸﾞ	2	
9	256C5-12421		RUBBER	ﾗﾊﾞｰ	4	
10	01186-12030		BOLT	ﾎﾞﾙﾄ	8	
11	01103-16065		BOLT	ﾎﾞﾙﾄ	4	
12	02010-00016		WASHER	ﾜｯｼｬ	4	
13	216G6-42911		HINGE	ﾋﾝｼﾞ	2	
14	216G6-42921		BUSHING	ﾌﾞｯｼﾝｸﾞ	2	
15	216G6-42931		BOLT	ﾎﾞﾙﾄ	2	
16	02000-00006		WASHER	ﾜｯｼｬ	2	
17	02010-00006		WASHER	ﾜｯｼｬ	2	
18	01400-00006		NUT	ﾅｯﾄ	2	
19	535C5-30251		BOOT,RH	ﾌﾞｰﾂ	1	
20	535C5-30261		BOOT,LH	ﾌﾞｰﾂ	1	
21	55785-42101		RUBBER	ﾗﾊﾞｰ	1	
22	214A6-42481		RUBBER	ﾗﾊﾞｰ	2	
23	530C5-32151		RUBBER	ﾗﾊﾞｰ	2	
24	534A5-32631		TAPE	ﾃｰﾌﾟ	2	
25	229F2-42141	+	WIRE-HARNESS,REAR	ﾜｲﾔﾊｰﾈｽ	2	
26	535C5-32081		WIRE-HARNESS	ﾜｲﾔﾊｰﾈｽ	1	
27	524W5-32091		CLAMP	ｸﾗﾝﾌﾟ	1	
28	535C5-30601		STEP	ｽﾃｯﾌﾟ	1	A,B,C,D,E,F:433- G:157- H,J,K:148- L:106-
29	535C5-32451		PLATE	ﾌﾟﾚｰﾄ	1	A,B,C,D,E,F:433- G:157- H,J,K:148- L:106-
30	25816-42761		RUBBER	ﾗﾊﾞｰ	2	A,B,C,D,E,F:433- G:157- H,J,K:148- L:106-
31	01100-08016		BOLT	ﾎﾞﾙﾄ	4	A,B,C,D,E,F:433- G:157- H,J,K:148- L:106-
32	02000-00008		WASHER	ﾜｯｼｬ	4	A,B,C,D,E,F:433- G:157- H,J,K:148- L:106-

FIG.148 CABIN MOUNT [SCB]

(F4049380) キャビネットマウント

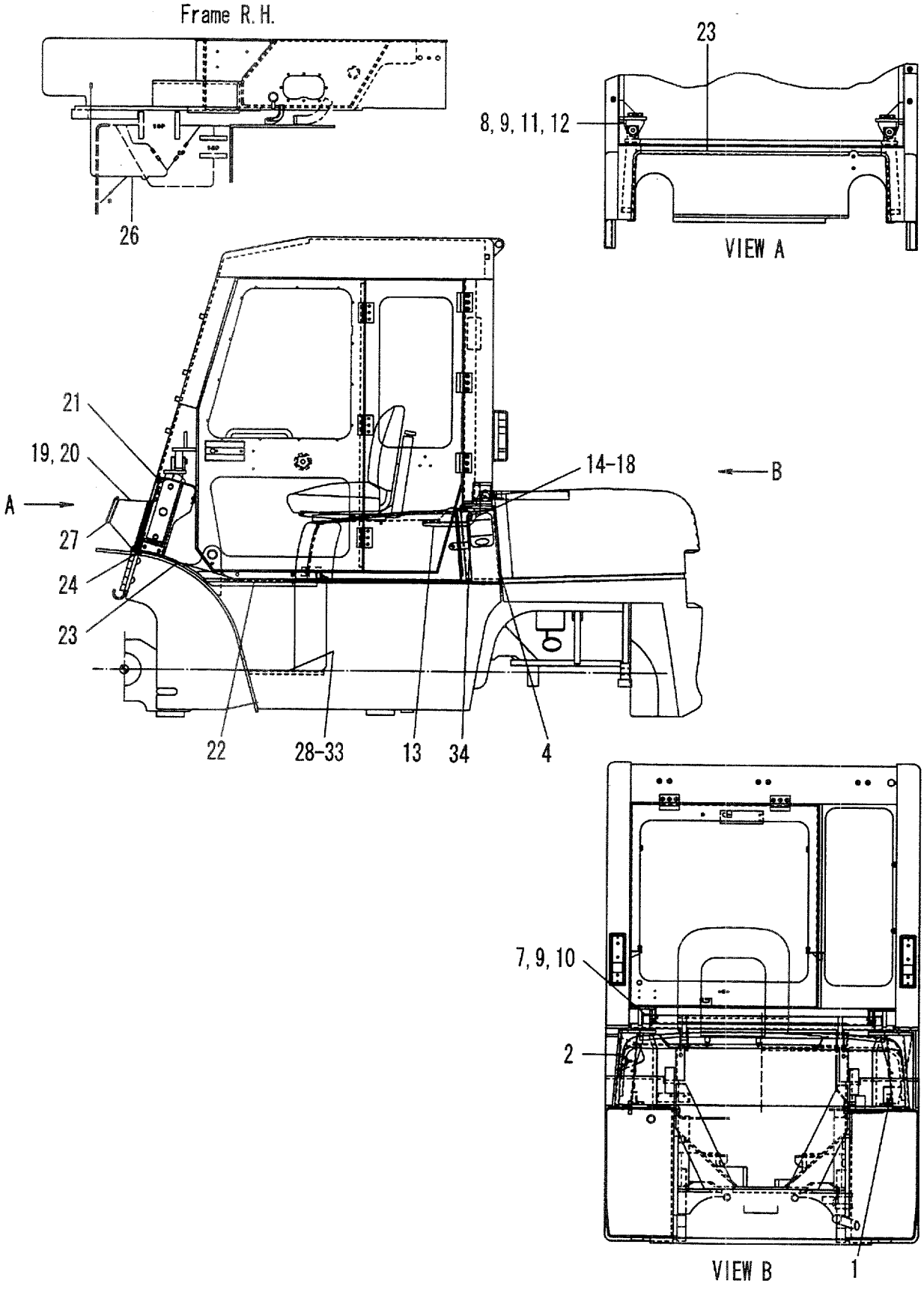

A:FD35C8 D:FD40T8 G:FD50T8 K:FG45T8
B:FD35T8 E:FD45C8 H:FG35T8 L:FG50T8
C:FD40C8 F:FD45T8 J:FG40T8

FIG.148
(F4049380)

Item No	Part No.	Mark	Description	Req'd	Remarks : Serial No.
33	02010-00008		WASHER ﾜｯｼｬ	4	A,B,C,D,E,F:433- G:157- H,J,K:148- L:106-
34	572E5-52161		RUBBER ﾗﾊﾞｰ	1	

FIG.149 CABIN [SCB]

(F4049390) キャビン

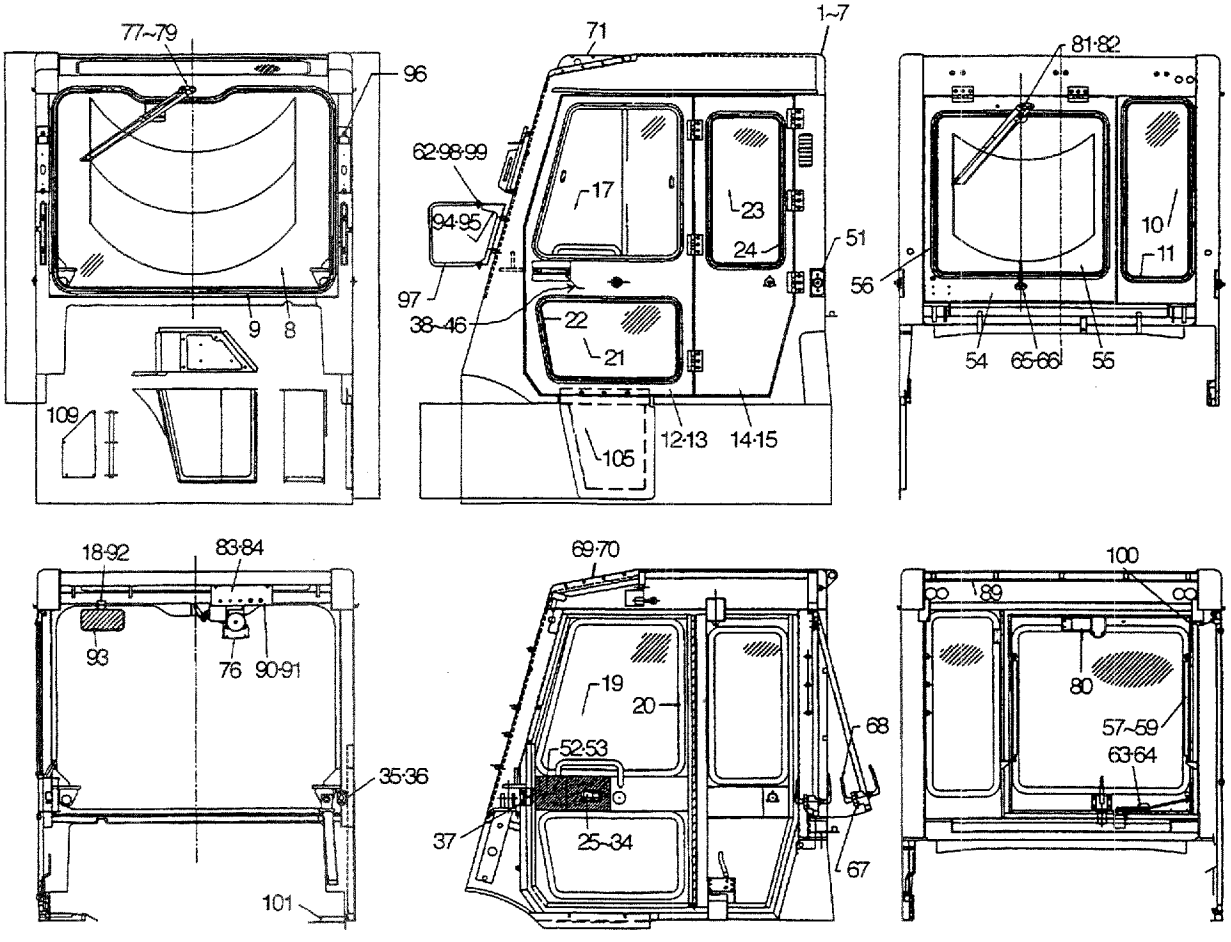

A:FD35C8 D:FD40T8 G:FD50T8 K:FG45T8
B:FD35T8 E:FD45C8 H:FG35T8 L:FG50T8
C:FD40C8 F:FD45T8 J:FG40T8

FIG.149
(F4049390)

Item No	Part No.	Mark	Description		Req'd	Remarks : Serial No.
A1	535C5-30001		CABIN-ASSY	ｷｬﾋﾞﾝｱｯｾﾝ	1	A,B,C,D,E,F:1-432 G:1-156 INC.1-109
-	535C5-30002		CABIN-ASSY	ｷｬﾋﾞﾝｱｯｾﾝ	1	A,B,C,D,E,F:433- G:157- INC.1-109
-	535L5-30001		CABIN-ASSY	ｷｬﾋﾞﾝｱｯｾﾝ	1	H,J,K:1-147 L:1-105 INC.1-109
-	535L5-30002		CABIN-ASSY	ｷｬﾋﾞﾝｱｯｾﾝ	1	H,J,K:148- L:106- INC.1-109
1	01030-05010		SCREW	ｽｸﾘｭ	4	
2	01400-00005		NUT	ﾅｯﾄ	4	
3	534A5-33001		GROMMET	ｸﾞﾛﾒｯﾄ	2	
4	535C5-30101		CABIN	ｷｬﾋﾞﾝ	1	A,B,C,D,E,F:1-432 G:1-156
-	535C5-30102		CABIN	ｷｬﾋﾞﾝ	1	A,B,C,D,E,F:433- G:157-
-	535L5-30101		CABIN	ｷｬﾋﾞﾝ	1	H,J,K:1-147 L:1-105
-	535L5-30102		CABIN	ｷｬﾋﾞﾝ	1	H,J,K:148- L:106-
5	27662-62711		GROMMET	ｸﾞﾛﾒｯﾄ	2	
6	27662-63041		GROMMET	ｸﾞﾛﾒｯﾄ	1	
7	25596-42361		RIVET	ﾘﾍﾞｯﾄ	4	
8	535C5-33001		GLASS,FRONT	ｶﾞﾗｽ	1	
9	535C5-33011		H-RUBBER	Hﾗﾊﾞｰ	1	
10	530C5-33021		GLASS,REAR	ｶﾞﾗｽ	1	
11	530C5-33031		H-RUBBER	Hﾗﾊﾞｰ	1	
12	535C5-30501		DOOR,SIDE,F	ﾄﾞｱｰ	1	
13	535C5-30511		DOOR,SIDE,F	ﾄﾞｱｰ	1	A,B,C,D,E,F:1-432 G:1-156 H,J,K:1-147 L:1-105
-	535C5-30512		DOOR,SIDE,F	ﾄﾞｱｰ	1	A,B,C,D,E,F:433- G:157- H,J,K:148- L:106-
14	535C5-30521		DOOR,SIDE,R	ﾄﾞｱｰ	1	
15	535C5-30531		DOOR,SIDE,R	ﾄﾞｱｰ	1	
16	01212-08020	+	BOLT	ﾎﾞﾙﾄ	36	
17	522A5-30241		WINDOW,LH	ｳｲﾝﾄﾞｳ	1	
18	01030-05012		SCREW	ｽｸﾘｭ	32	
19	530C5-33041		GLASS,SIDE DOOR R	ｶﾞﾗｽ	1	
20	530C5-33051		H-RUBBER	Hﾗﾊﾞｰ	1	
21	530C5-33061		GLASS,SIDE DOOR F	ｶﾞﾗｽ	2	
22	530C5-33071		H-RUBBER	Hﾗﾊﾞｰ	2	
23	530C5-33081		GLASS,SUB DOOR	ｶﾞﾗｽ	2	
24	530C5-33091		H-RUBBER	Hﾗﾊﾞｰ	2	

FIG.149 CABIN [SCB]

(F4049390) キャビン

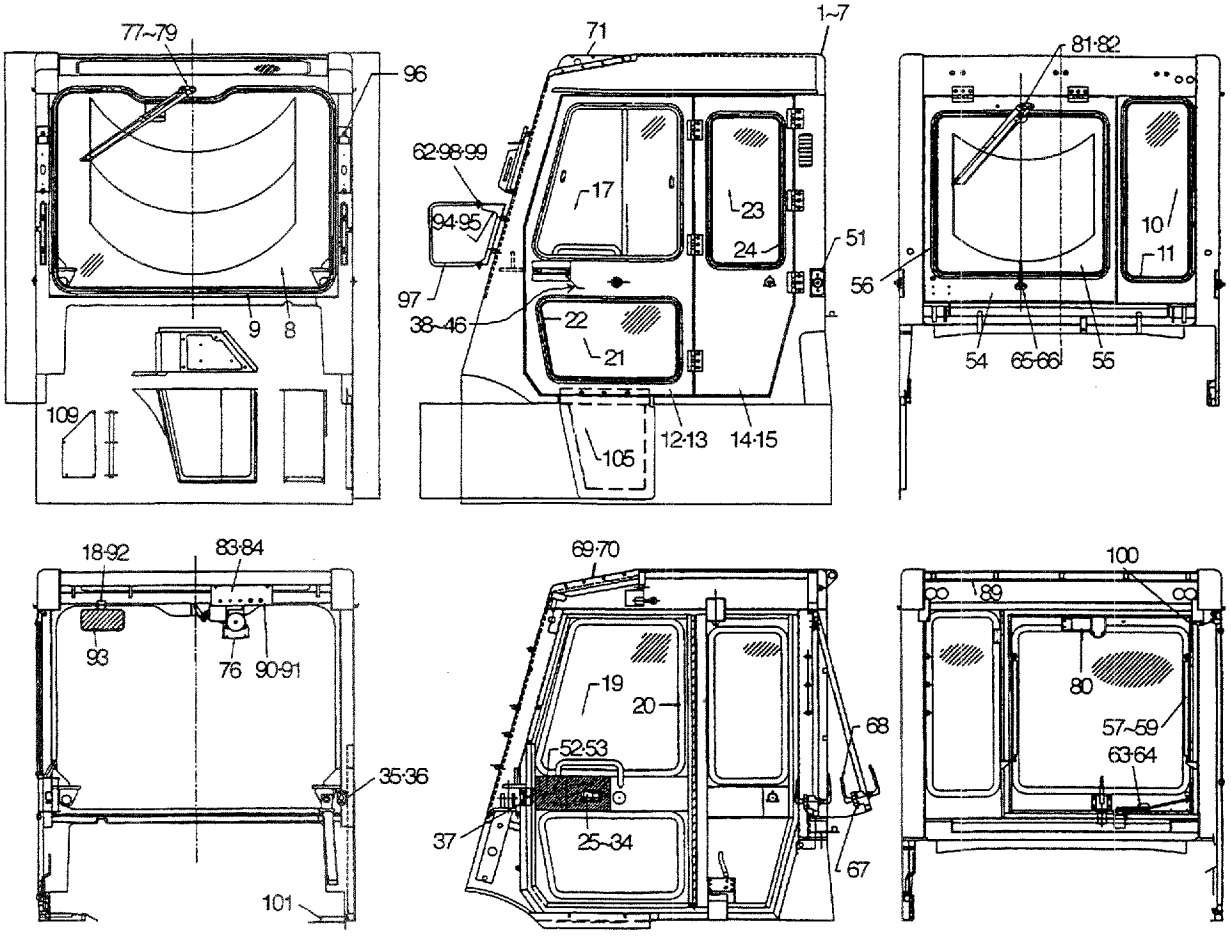

A:FD35C8 D:FD40T8 G:FD50T8 K:FG45T8
B:FD35T8 E:FD45C8 H:FG35T8 L:FG50T8
C:FD40C8 F:FD45T8 J:FG40T8

FIG.149
(F4049390)

Item No	Part No.	Mark	Description		Req'd	Remarks : Serial No.
25	522A5-30561		CASE,INNER HANDLE	ケース	1	
26	522A5-30571		CASE,INNER HANDLE	ケース	1	
27	522A5-30581		HANDLE,RH	ハンドル	1	
28	522A5-30591		HANDLE,LH	ハンドル	1	
29	522A5-30601		LOCK,RH	ロック	1	
30	522A5-30611		LOCK,LH	ロック	1	
31	522A5-30631		LATCH ROD,RH	ラッチ	1	
32	522A5-30641		LATCH ROD,LH	ラッチ	1	
33	01030-06012		SCREW	スクリュ	24	
34	522A5-30211		BOLT	ボルト	2	
35	522A5-30621		STRIKER	ストライカ	2	
36	522A5-32421		BOLT	ボルト	4	
37	522A5-30651		STRIKER,RECIEVER	ストライカ	2	
A2	55785-30281		CATCH-ASSY,DOOR	ドアーキャッチアッセン	2	INC.38-46
38	55785-32171		CATCHER	キャッチャ	2	
39	55785-32161		PACKING	パッキング	2	
40	01030-05015		SCREW	スクリュ	6	
41	01400-00005		NUT	ナット	6	
42	55785-32181		RUBBER	ラバー	2	
43	55785-32191		CATCHER	キャッチャ	2	
44	55785-32201		WASHER	ワッシャ	4	
45	01400-00008		NUT	ナット	2	
46	02010-00008		WASHER	ワッシャ	2	
47	01030-05015	+	SCREW	スクリュ	6	
48	534A5-30541	+	STOPPER,RH	ストッパ	1	
49	534A5-30551	+	STOPPER,LH	ストッパ	1	
50	01183-08016	+	BOLT	ボルト	9	
51	524W5-34221		CATCH,C	キャッチ	2	
52	522A5-32211		PLATE,INNER,RH	プレート	1	
53	522A5-32201		PLATE,INNER,LH	プレート	1	
54	535C5-30541		DOOR,REAR	ドアー	1	
55	535C5-33101		GLASS	ガラス	1	
56	535C5-33111		H-RUBBER	Hラバー	1	
57	522A5-30401		SPRING,GAS	スプリング	2	
58	522A5-30411		PIN	ピン	4	
59	522A5-30421		E-RING	Eリング	4	
60	534A5-33121	+	SUPPORT,REAR DOOR	サポート	1	
61	01103-08020	+	BOLT	ボルト	1	
62	01400-00008		NUT	ナット	6	
63	52155-32161		CLIP	クリップ	1	
64	01031-04012		SCREW	スクリュ	2	
65	52125-32651		HANDLE,OUTER	ハンドル	1	
66	522A5-32401		BOLT	ボルト	2	
67	57830-13871		LATCH,DOOR	ラッチ	1	
68	57830-13891		HANDLE,INNER	ハンドル	1	
69	535C5-33121		GLASS,ROOF	ガラス	1	
70	530C5-33131		H-RUBBER	Hラバー	1	
71	530C5-30551		GUARD	ガード	1	
72	01183-08020	+	BOLT	ボルト	8	
73	535C5-32801	+	RUBBER	ラバー	2	

FIG.149 CABIN [SCB]

(F4049390) キャビン

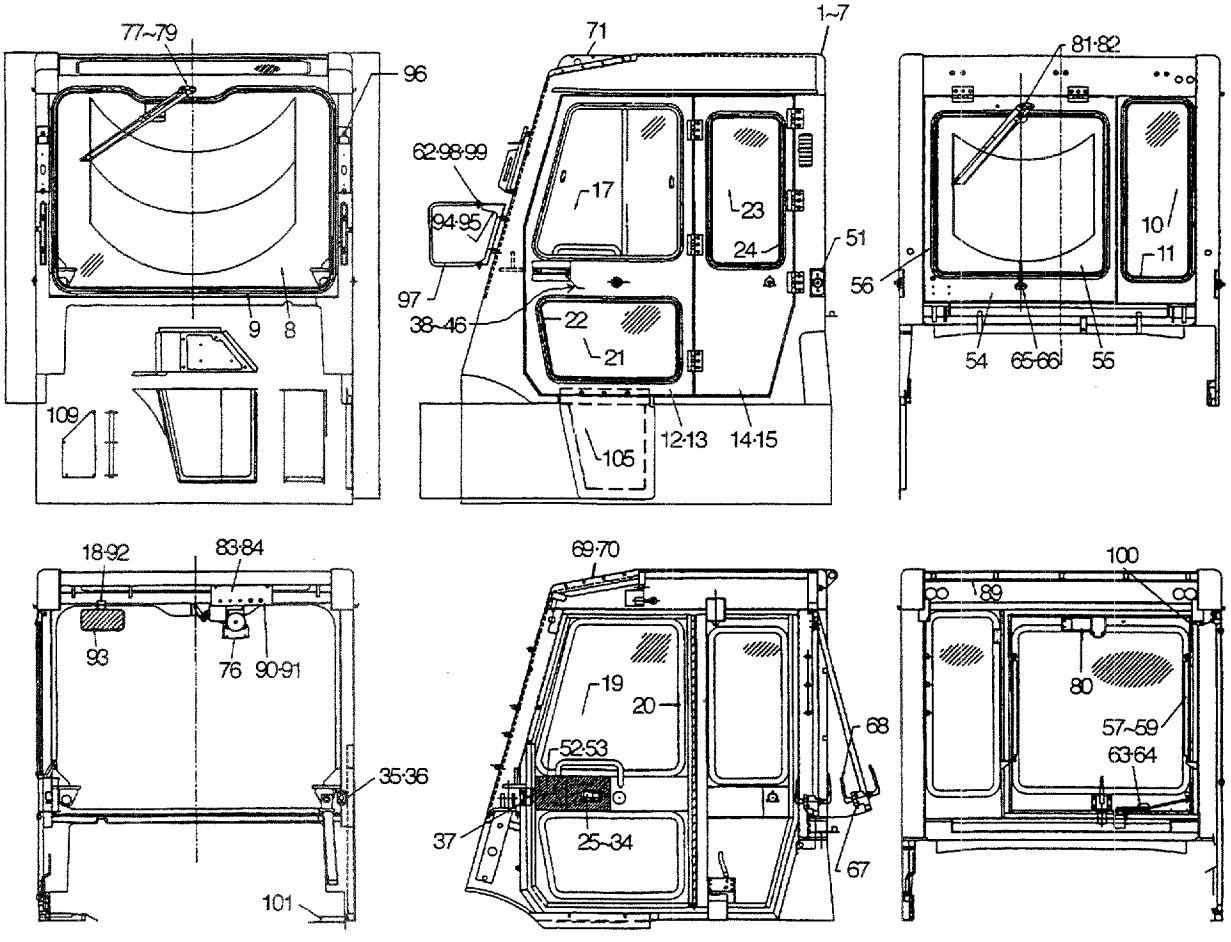

A:FD35C8 D:FD40T8 G:FD50T8 K:FG45T8
B:FD35T8 E:FD45C8 H:FG35T8 L:FG50T8
C:FD40C8 F:FD45T8 J:FG40T8

FIG.149
(F4049390)

Item No	Part No.	Mark	Description		Req'd	Remarks : Serial No.
74	535C5-32811	+	RUBBER	ﾗﾊﾞｰ	2	
75	535C5-32821	+	RUBBER	ﾗﾊﾞｰ	1	
76	530C5-32511		MOTOR,WIPER,FRONT	ﾓｰﾀ	1	A,B,C,D,E,F,G
-	529F7-62401		MOTOR,WIPER,FRONT	ﾓｰﾀ	1	H,J,K,L
77	530C5-32551		ARM	ｱｰﾑ	1	
78	529F7-62421		BLADE	ﾌﾞﾚｰﾄﾞ	1	
79	534A5-32801		BRACKET	ﾌﾞﾗｹｯﾄ	1	
80	524W5-34231		MOTOR,WIPER,REAR	ﾓｰﾀ	1	A,B,C,D,E,F,G
-	534A5-32511		MOTOR,WIPER,REAR	ﾓｰﾀ	1	H,J,K,L
81	514A5-32601		ARM	ｱｰﾑ	1	
82	514A5-42051		BLADE	ﾌﾞﾚｰﾄﾞ	1	
83	529F7-62431		SWITCH,WIPER	ｽｲｯﾁ	1	
84	55595-43632		SWITCH,WIPER	ｽｲｯﾁ	1	
85	54515-32171	+	LAMP,ROOM	ﾗﾝﾌﾟ	1	A,B,C,D,E,F,G
-	522A5-30691	+	LAMP,ROOM	ﾗﾝﾌﾟ	1	H,J,K,L
86	01030-04016	+	SCREW	ｽｸﾘｭ	2	
87	530C5-32541	+	WIRE-HARNESS	ﾜｲﾔﾊｰﾈｽ	1	
88	530C5-32531	+	WIRE,LEAD	ﾜｲﾔ	1	
89	530C5-32831		BOARD,INNER,ROOF	ﾎﾞｰﾄﾞ	1	
90	535C5-32561		PLATE	ﾌﾟﾚｰﾄ	1	
91	535C5-32571		COVER	ｶﾊﾞｰ	1	
92	522A5-30681		BRACKET,ROOM MIRROR	ﾌﾞﾗｹｯﾄ	1	
93	54515-32151		MIRROR,ROOM	ﾐﾗｰ	1	
94	514A5-32481		BRACKET	ﾌﾞﾗｹｯﾄ	1	
95	514A5-32491		BRACKET	ﾌﾞﾗｹｯﾄ	1	
96	01103-08016		BOLT	ﾎﾞﾙﾄ	4	
97	524W5-34121		STAY,BACK MIRROR	ｽﾃｰ	2	
98	01100-08020		BOLT	ﾎﾞﾙﾄ	4	
99	02010-00008		WASHER	ﾜｯｼｬ	4	
100	25786-40651		CATCH,BONNET	ｷｬｯﾁ	2	
101	535C5-30301		STEP	ｽﾃｯﾌﾟ	1	
102	535C5-32141	+	SPONGE	ｽﾎﾟﾝｼﾞ	1	
103	535C5-32161	+	SPONGE	ｽﾎﾟﾝｼﾞ	1	
104	535C5-32171	+	SPONGE	ｽﾎﾟﾝｼﾞ	1	
105	535C5-30311		COVER,STEP	ｶﾊﾞｰ	1	A,B,C,D,E,F:1-432 G:1-156 H,J,K:1-147 L:1-105
-	535C5-30551		COVER,STEP	ｶﾊﾞｰ	1	A,B,C,D,E,F:433- G:157- H,J,K:148- L:106-
106	01100-08016	+	BOLT	ﾎﾞﾙﾄ	3	A,B,C,D,E,F:433- G:157- H,J,K:148- L:106-
107	02000-00008	+	WASHER	ﾜｯｼｬ	3	A,B,C,D,E,F:433- G:157- H,J,K:148- L:106-

FIG.149 CABIN [SCB]

(F4049390) キャビン

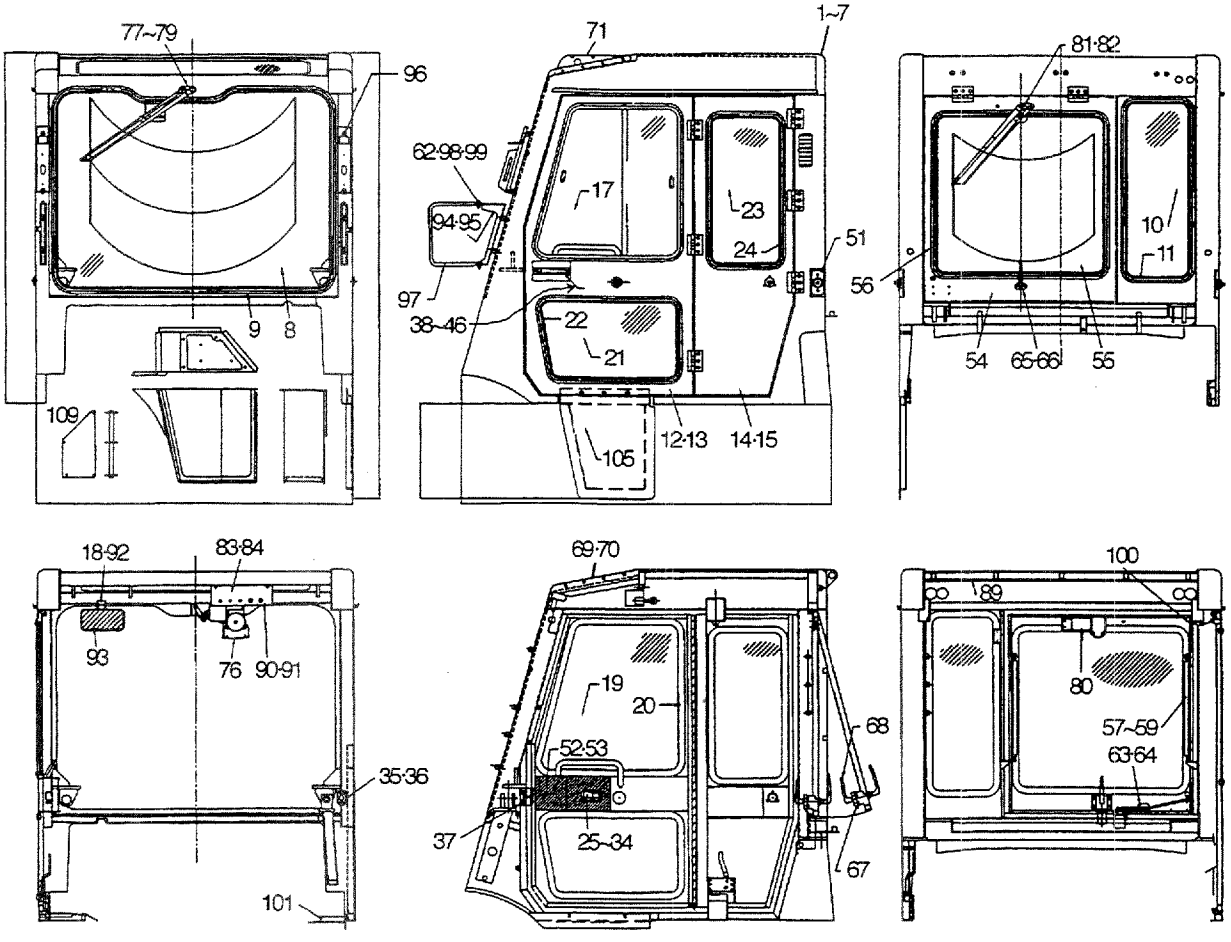

A:FD35C8 D:FD40T8 G:FD50T8 K:FG45T8
B:FD35T8 E:FD45C8 H:FG35T8 L:FG50T8
C:FD40C8 F:FD45T8 J:FG40T8

FIG.149
(F4049390)

Item No	Part No.	Mark	Description		Req'd	Remarks : Serial No.
108	02010-00008	+	WASHER	ﾜｯｼｬ	3	A,B,C,D,E,F:433- G:157- H,J,K:148- L:106-
109	535C5-32451		PLATE	ﾌﾟﾚｰﾄ	1	
110	535C5-32151	+	SPONGE	ｽﾎﾟﾝｼﾞ	1	A,B,C,D,E,F:1-432 G:1-156 H,J,K:1-147 L:1-105

FIG.150 AIR CONDITIONER [SCB/AC]

(F40493A0) エアーコンディショナ

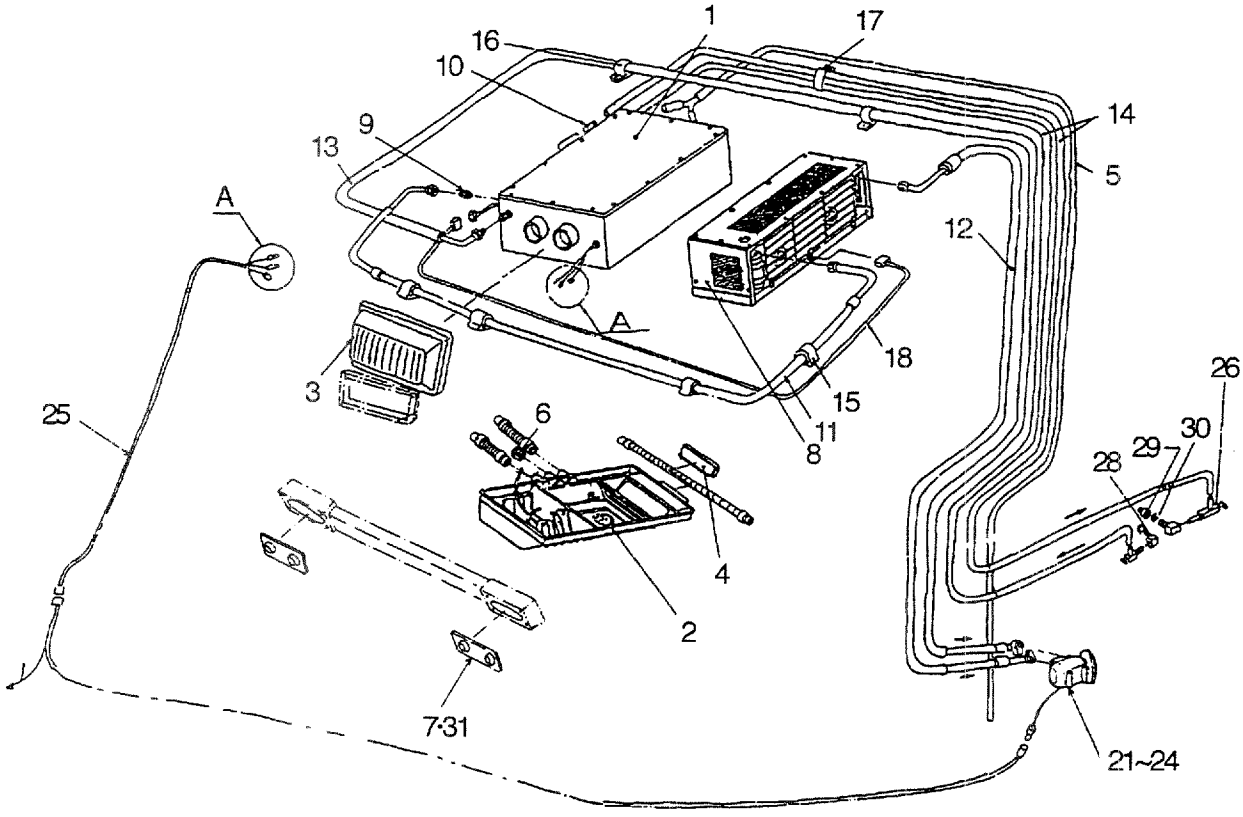

A:FD35C8 D:FD40T8 G:FD50T8 K:FG45T8
B:FD35T8 E:FD45C8 H:FG35T8 L:FG50T8
C:FD40C8 F:FD45T8 J:FG40T8

FIG.150
(F40493A0)

Item No	Part No.	Mark	Description		Req'd	Remarks : Serial No.
A1	535C7-60411		AIR-CON-ASSY,NO.1	ｴｱｺﾝｱｯｾﾝ	1	A,B,C,D,E,F,G
						INC.1-7
1	29149-47041		UNIT,AIR-CON	ｴｱｺﾝﾕﾆｯﾄ	1	A,B,C,D,E,F,G
2	29189-42011		GRILLE	ｸﾞﾘﾙ	1	A,B,C,D,E,F,G
3	29189-42031		FILTER	ﾌｲﾙﾀ	1	A,B,C,D,E,F,G
4	29189-42091		PLATE	ﾌﾟﾚｰﾄ	1	A,B,C,D,E,F,G
5	29189-42521		HOSE,DRAIN	ﾎｰｽ	1	A,B,C,D,E,F,G
6	535C7-62161		PLUG	ﾌﾟﾗｸﾞ	1	A,B,C,D,E,F,G
7	58490-52511		GRILLE	ｸﾞﾘﾙ	2	A,B,C,D,E,F,G
A2	535C7-60421		AIR-CON-ASSY,NO.2	ｴｱｺﾝｱｯｾﾝ	1	A,B,C,D,E,F,G
						INC.8-20
8	25369-48081		CONDENSER	ｺﾝﾃﾞﾝｻ	1	A,B,C,D,E,F,G
9	535C7-62121		UNION	ﾕﾆｵﾝ	1	A,B,C,D,E,F,G
10	25369-47201		CONNECTOR	ｺﾈｸﾀ	2	A,B,C,D,E,F,G
11	535C7-62251		HOSE	ﾎｰｽ	1	A,B,C,D,E,F,G
12	535C7-62261		HOSE	ﾎｰｽ	1	A,B,C,D,E,F,G
13	535C7-62271		HOSE	ﾎｰｽ	1	A,B,C,D,E,F,G
14	55807-62231		HOSE	ﾎｰｽ	2	A,B,C,D,E,F,G
15	55807-62281		BUSHING	ﾌﾞｯｼﾝｸﾞ	10	A,B,C,D,E,F,G
16	55807-62301		CLAMP	ｸﾗﾝﾌﾟ	6	A,B,C,D,E,F,G
17	52657-22051		CLAMP	ｸﾗﾝﾌﾟ	2	A,B,C,D,E,F,G
18	55807-62341		WIRE-HARNESS	ﾜｲﾔﾊｰﾈｽ	1	A,B,C,D,E,F,G
19	535C7-62481	+	CLAMP	ｸﾗﾝﾌﾟ	2	A,B,C,D,E,F,G
20	535C7-62491	+	CLAMP	ｸﾗﾝﾌﾟ	2	A,B,C,D,E,F,G
A3	535C7-60431		AIR-CON-ASSY,NO.3	ｴｱｺﾝｱｯｾﾝ	1	A,B,C,D,E,F,G
						INC.21-27
21	29349-42631		COMPRESSOR	ｺﾝﾌﾟﾚｯｻ	1	A,B,C,D,E,F,G
22	26816-73091		PLATE,CAUTION	ﾌﾟﾚｰﾄ	1	A,B,C,D,E,F,G
23	535C7-62241		VELT	ﾍﾞﾙﾄ	1	A,B,C,D,E,F,G
24	529F7-62701		GAS,COOLER	ｶﾞｽ	4	A,B,C,D,E,F,G
25	55807-62331		WIRE-HARNESS	ﾜｲﾔﾊｰﾈｽ	1	A,B,C,D,E,F,G
26	56110-63521		VALVE,WATER	ﾊﾞﾙﾌﾞ	2	A,B,C,D,E,F,G
27	55807-62241	+	RELAY	ﾘﾚｰ	1	A,B,C,D,E,F,G
28	55957-22121		ELBOW	ｴﾙﾎﾞ	2	A,B,C,D,E,F,G
29	535C7-22111		NIPPLE	ﾆｯﾌﾟﾙ	1	A,B,C,D,E,F,G
30	3978251		PACKING	ﾊﾟｯｷﾝｸﾞ	2	A,B,C,D,E,F,G
31	01030-04010		SCREW	ｽｸﾘｭ	8	A,B,C,D,E,F,G
32	04911-00022	+	CLIP	ｸﾘｯﾌﾟ	2	A,B,C,D,E,F,G
33	01183-08020	+	BOLT	ﾎﾞﾙﾄ	1	A,B,C,D,E,F,G
34	01400-00008	+	NUT	ﾅｯﾄ	1	A,B,C,D,E,F,G
35	01100-06012	+	BOLT	ﾎﾞﾙﾄ	7	A,B,C,D,E,F,G
36	02010-00006	+	WASHER	ﾜｯｼｬ	7	A,B,C,D,E,F,G
37	01110-10020	+	BOLT	ﾎﾞﾙﾄ	8	A,B,C,D,E,F,G
38	01100-10020	+	BOLT	ﾎﾞﾙﾄ	4	A,B,C,D,E,F,G
39	02010-00010	+	WASHER	ﾜｯｼｬ	12	A,B,C,D,E,F,G
40	02000-00010	+	WASHER	ﾜｯｼｬ	12	A,B,C,D,E,F,G
41	01100-08020	+	BOLT	ﾎﾞﾙﾄ	12	A,B,C,D,E,F,G
42	01100-08030	+	BOLT	ﾎﾞﾙﾄ	4	A,B,C,D,E,F,G
43	02010-00008	+	WASHER	ﾜｯｼｬ	23	A,B,C,D,E,F,G
44	02000-00008	+	WASHER	ﾜｯｼｬ	15	A,B,C,D,E,F,G

FIG.150 AIR CONDITIONER [SCB/AC]

(F40493A0) エアーコンディショナ

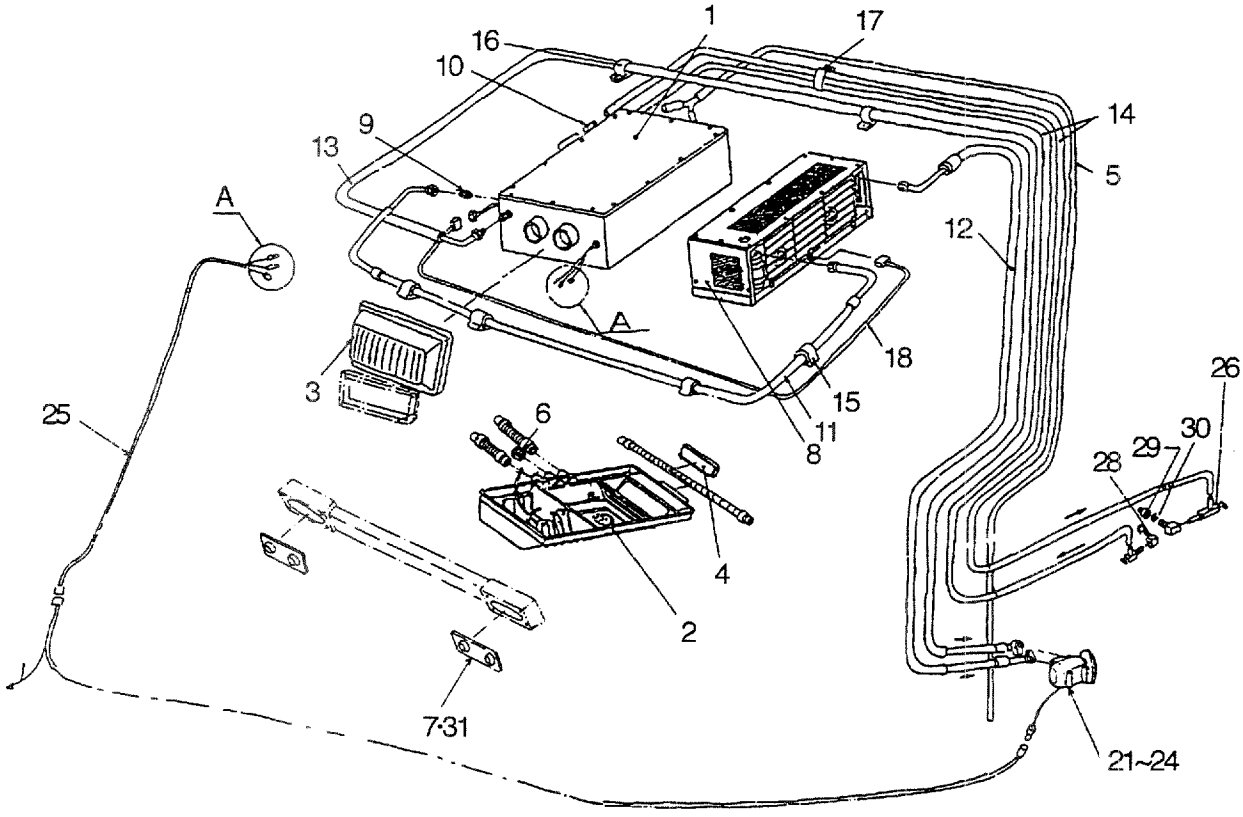

A:FD35C8 D:FD40T8 G:FD50T8 K:FG45T8
B:FD35T8 E:FD45C8 H:FG35T8 L:FG50T8
C:FD40C8 F:FD45T8 J:FG40T8

FIG.150
(F40493A0)

Item No	Part No.	Mark	Description	Req'd	Remarks : Serial No.
45	01100-08012	+	BOLT ﾎﾞﾙﾄ	7	A,B,C,D,E,F,G
46	02000-00006	+	WASHER ﾜｯｼｬ	5	A,B,C,D,E,F,G
47	530C7-62901	+	DECAL,CAUTION,COOLAN ﾃﾞｶﾙ	1	A,B,C,D,E,F:2484- G:601-

FIG.151 AIR CONDITIONER WIRING [SCB/AC]

(F40493B0) エアーコンデ゛ィショナワイヤリング゛

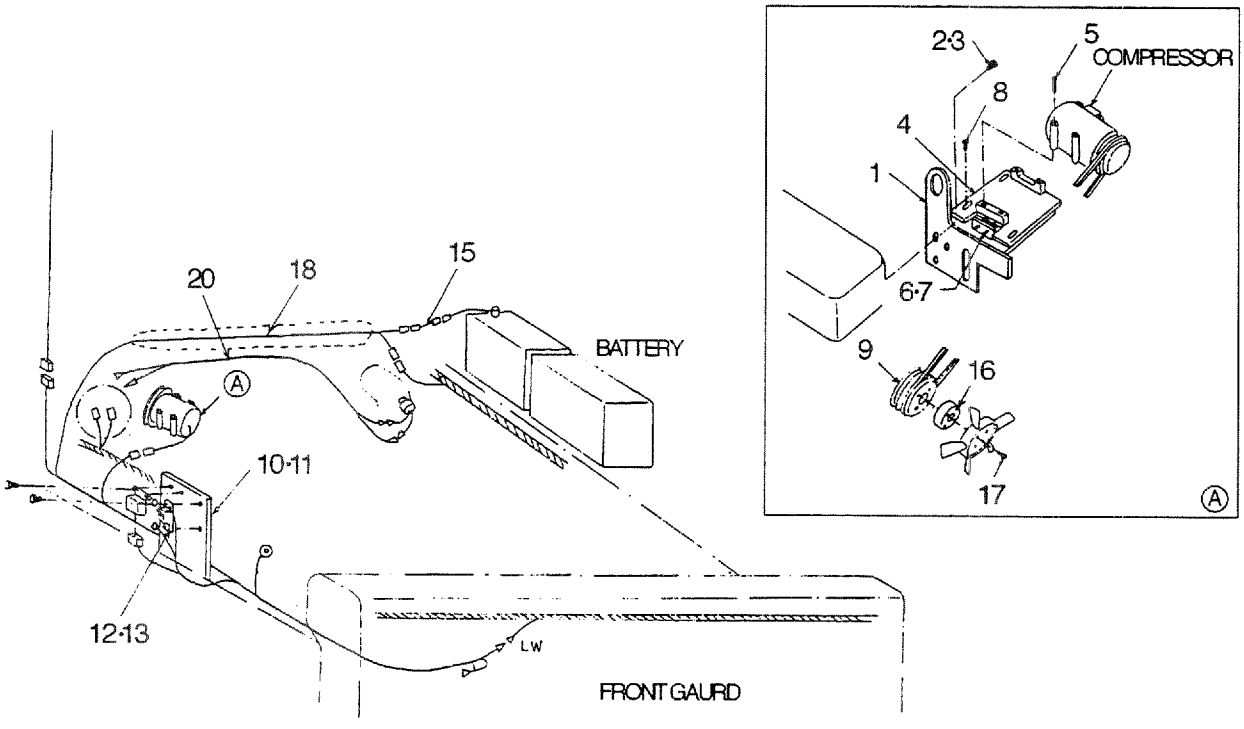

A:FD35C8 D:FD40T8 G:FD50T8 K:FG45T8
B:FD35T8 E:FD45C8 H:FG35T8 L:FG50T8
C:FD40C8 F:FD45T8 J:FG40T8

FIG.151
(F40493B0)

Item No	Part No.	Mark	Description		Req'd	Remarks : Serial No.
1	535C7-62171		BRACKET	ﾌﾞﾗｹｯﾄ	1	A,B,C,D,E,F,G
2	01219-10030		BOLT	ﾎﾞﾙﾄ	2	A,B,C,D,E,F,G
3	01219-14030		BOLT	ﾎﾞﾙﾄ	1	A,B,C,D,E,F,G
4	535C7-62191		PLATE,SLIDE	ﾌﾟﾚｰﾄ	1	A,B,C,D,E,F,G
5	01220-08090		BOLT	ﾎﾞﾙﾄ	4	A,B,C,D,E,F,G
6	55807-62121		BOLT	ﾎﾞﾙﾄ	2	A,B,C,D,E,F,G
7	01402-00010		NUT	ﾅｯﾄ	2	A,B,C,D,E,F,G
8	01185-10020		BOLT	ﾎﾞﾙﾄ	3	A,B,C,D,E,F,G
9	55807-62111		PULLEY	ﾌﾟｰﾘ	1	A,B,C,D,E,F,G
10	535C7-62281		BRACKET	ﾌﾞﾗｹｯﾄ	1	A,B,C,D,E,F,G
11	01183-08016		BOLT	ﾎﾞﾙﾄ	2	A,B,C,D,E,F,G
12	55807-62381		BREAKER	ﾌﾞﾚｰｶ	1	A,B,C,D,E,F,G
13	01183-04010		BOLT	ﾎﾞﾙﾄ	2	A,B,C,D,E,F,G
14	01183-06010	+	BOLT	ﾎﾞﾙﾄ	2	A,B,C,D,E,F,G
15	24602-42111		WIRE,FUSIBLE-LINK	ﾜｲﾔ	1	A,B,C,D,E,F,G
16	535C7-62131		SPACER,FAN	ｽﾍﾟｰｻ	1	A,B,C,D,E,F,G
17	535C7-62441		BOLT	ﾎﾞﾙﾄ	4	A,B,C,D,E,F,G
18	535C7-62001		WIRE-HARNESS	ﾜｲﾔﾊｰﾈｽ	1	A,B,C,D,E,F,G
19	01231-06030	+	BOLT	ﾎﾞﾙﾄ	2	A,B,C,D,E,F,G
20	516G9-92101		WIRE-HARNESS	ﾜｲﾔﾊｰﾈｽ	1	A,B,C,D,E,F,G

FIG.152 FORK & LIFT BRACKET [VM24T]

(M4048210) フォーク&リフトブラケット

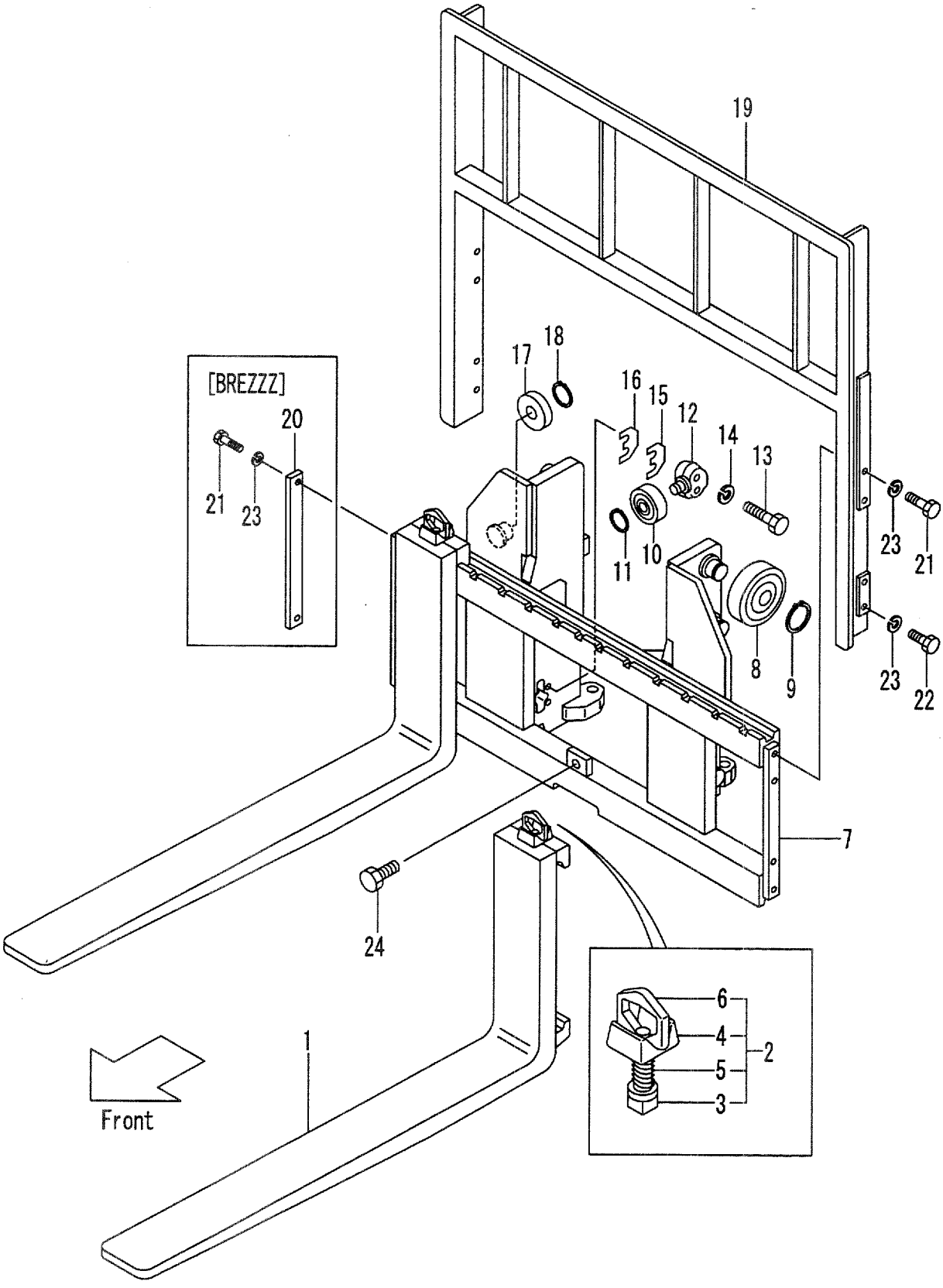

A:VM24T(FD35,40,FG35,40)

Item No	Part No.	Mark	Description		Req'd	Remarks : Serial No.
1	24328-10513		FORK	ﾌｫｰｸ	2	MAST NO.1-3270 (L=1070) INC.3-6
-	24328-10514		FORK	ﾌｫｰｸ	2	MAST NO.3271- (L=1070) INC.3-6
-	24328-10503		FORK	ﾌｫｰｸ	2	[LF100] INC.3-6
-	24328-10513		FORK	ﾌｫｰｸ	2	MAST NO.1-3270 [LF107] INC.3-6
-	24328-10514		FORK	ﾌｫｰｸ	2	MAST NO.3271- [LF107] INC.3-6
-	24328-10523		FORK	ﾌｫｰｸ	2	[LF110] INC.3-6
-	24328-10533		FORK	ﾌｫｰｸ	2	[LF120] INC.3-6
-	24328-10543		FORK	ﾌｫｰｸ	2	MAST NO.1-3270 [LF122] INC.3-6
-	24328-10544		FORK	ﾌｫｰｸ	2	MAST NO.3271- [LF122] INC.3-6
-	24328-12303		FORK	ﾌｫｰｸ	2	MAST NO.1-4180 [LF130] INC.3-6
-	24328-12304		FORK	ﾌｫｰｸ	2	MAST NO.4181- [LF130] INC.3-6
-	24328-10553		FORK	ﾌｫｰｸ	2	MAST NO.1-4180 [LF137] INC.3-6
-	24328-10554		FORK	ﾌｫｰｸ	2	MAST NO.4181- [LF137] INC.3-6
-	24328-12313		FORK	ﾌｫｰｸ	2	MAST NO.1-4180 [LF140] INC.3-6
-	24328-12314		FORK	ﾌｫｰｸ	2	MAST NO.4181- [LF140] INC.3-6
-	24328-12323		FORK	ﾌｫｰｸ	2	MAST NO.1-4180 [LF150] INC.3-6
-	24328-12324		FORK	ﾌｫｰｸ	2	MAST NO.4181- [LF150] INC.3-6
-	24328-10563		FORK	ﾌｫｰｸ	2	MAST NO.1-4180 [LF152] INC.3-6
-	24328-10564		FORK	ﾌｫｰｸ	2	MAST NO.4181- [LF152] INC.3-6
-	24328-12333		FORK	ﾌｫｰｸ	2	MAST NO.1-4180 [LF160] INC.3-6
-	24328-12334		FORK	ﾌｫｰｸ	2	MAST NO.4181- [LF160] INC.3-6
-	24328-10573		FORK	ﾌｫｰｸ	2	MAST NO.1-4180 [LF167] INC.3-6
-	24328-10574		FORK	ﾌｫｰｸ	2	MAST NO.4181- [LF167] INC.3-6
-	24328-12343		FORK	ﾌｫｰｸ	2	MAST NO.1-4180 [LF170] INC.3-6
-	24328-12344		FORK	ﾌｫｰｸ	2	MAST NO.4181- [LF170] INC.3-6
-	24328-12353		FORK	ﾌｫｰｸ	2	MAST NO.1-4180 [LF180] INC.3-6

FIG.152 FORK & LIFT BRACKET [VM24T]

(M4048210) フォーク&リフトブラケット

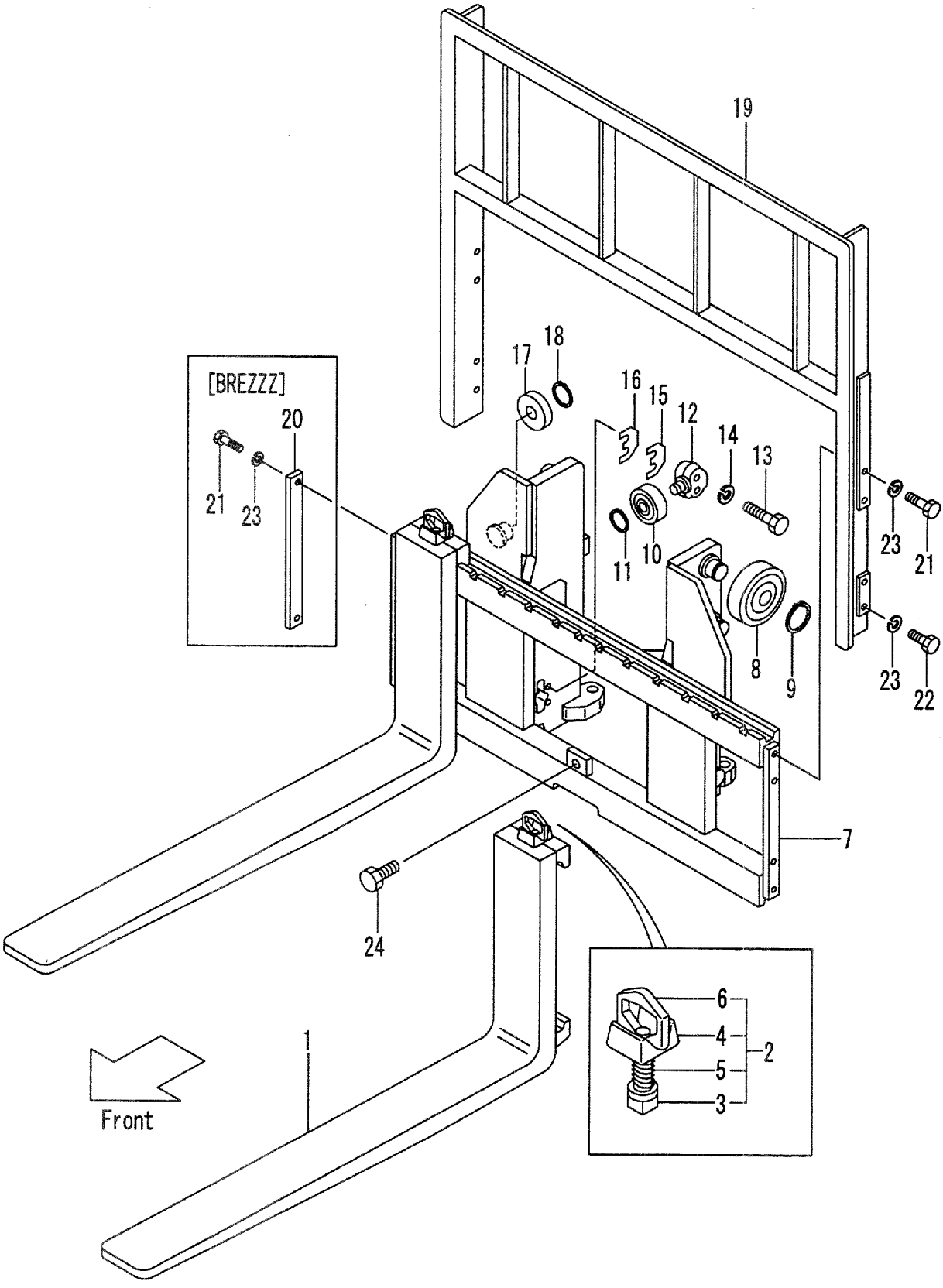

A:VM24T(FD35,40,FG35,40)

Item No	Part No.	Mark	Description		Req'd	Remarks : Serial No.
-	24328-12354		FORK	ﾌｫｰｸ	2	MAST NO.4181- [LF180] INC.3-6
-	24328-10583		FORK	ﾌｫｰｸ	2	MAST NO.1-4180 [LF182] INC.3-6
-	24328-10584		FORK	ﾌｫｰｸ	2	MAST NO.4181- [LF182] INC.3-6
-	24328-12363		FORK	ﾌｫｰｸ	2	MAST NO.1-4180 [LF190] INC.3-6
-	24328-12364		FORK	ﾌｫｰｸ	2	MAST NO.4181- [LF190] INC.3-6
-	24328-10593		FORK	ﾌｫｰｸ	2	MAST NO.1-4180 [LF197] INC.3-6
-	24328-10594		FORK	ﾌｫｰｸ	2	MAST NO.4181- [LF197] INC.3-6
-	24328-12373		FORK	ﾌｫｰｸ	2	MAST NO.1-4180 [LF200] INC.3-6
-	24328-12374		FORK	ﾌｫｰｸ	2	MAST NO.4181- [LF200] INC.3-6
-	24328-12383		FORK	ﾌｫｰｸ	2	MAST NO.1-4180 [LF210] INC.3-6
-	24328-12384		FORK	ﾌｫｰｸ	2	MAST NO.4181- [LF210] INC.3-6
-	24328-10603		FORK	ﾌｫｰｸ	2	MAST NO.1-4180 [LF212] INC.3-6
-	24328-10604		FORK	ﾌｫｰｸ	2	MAST NO.4181- [LF212] INC.3-6
-	24328-10613		FORK	ﾌｫｰｸ	2	MAST NO.1-4484 [LF220] INC.3-6
-	24328-10614		FORK	ﾌｫｰｸ	2	MAST NO.4485- [LF220] INC.3-6
-	24328-10623		FORK	ﾌｫｰｸ	2	MAST NO.1-4484 [LF227] INC.3-6
-	24328-10624		FORK	ﾌｫｰｸ	2	MAST NO.4485- [LF227] INC.3-6
-	24328-12393		FORK	ﾌｫｰｸ	2	MAST NO.1-4484 [LF230] INC.3-6
-	24328-12394		FORK	ﾌｫｰｸ	2	MAST NO.4485- [LF230] INC.3-6
2	214J8-11001		STOPPER,FORK	ｽﾄｯﾊﾟ	2	MAST NO.1-5544 INC.3-6
-	214J8-11002		STOPPER,FORK	ｽﾄｯﾊﾟ	2	MAST NO.5545-
3	NO PART NO.	#	STOPPER	ｽﾄｯﾊﾟ	2	MAST NO.1-5544
4	214J8-12001		HEAD	ﾍｯﾄﾞ	2	MAST NO.1-5544
5	214J8-12031		SPRING	ｽﾌﾟﾘﾝｸﾞ	2	MAST NO.1-5544
6	214A8-12021		HANDLE	ﾊﾝﾄﾞﾙ	2	MAST NO.1-5544
7	224T8-20001		BRACKET,LIFT	ﾌﾞﾗｹｯﾄ	1	
-	224T8-21001		BRACKET,LIFT	ﾌﾞﾗｹｯﾄ	1	[LBR002]
-	524T1-62001		BRACKET,LIFT	ﾌﾞﾗｹｯﾄ	1	[WF150][WF168][WF183] [WF200]

FIG.152 FORK & LIFT BRACKET [VM24T]

(M4048210) フォーク&リフトブラケット

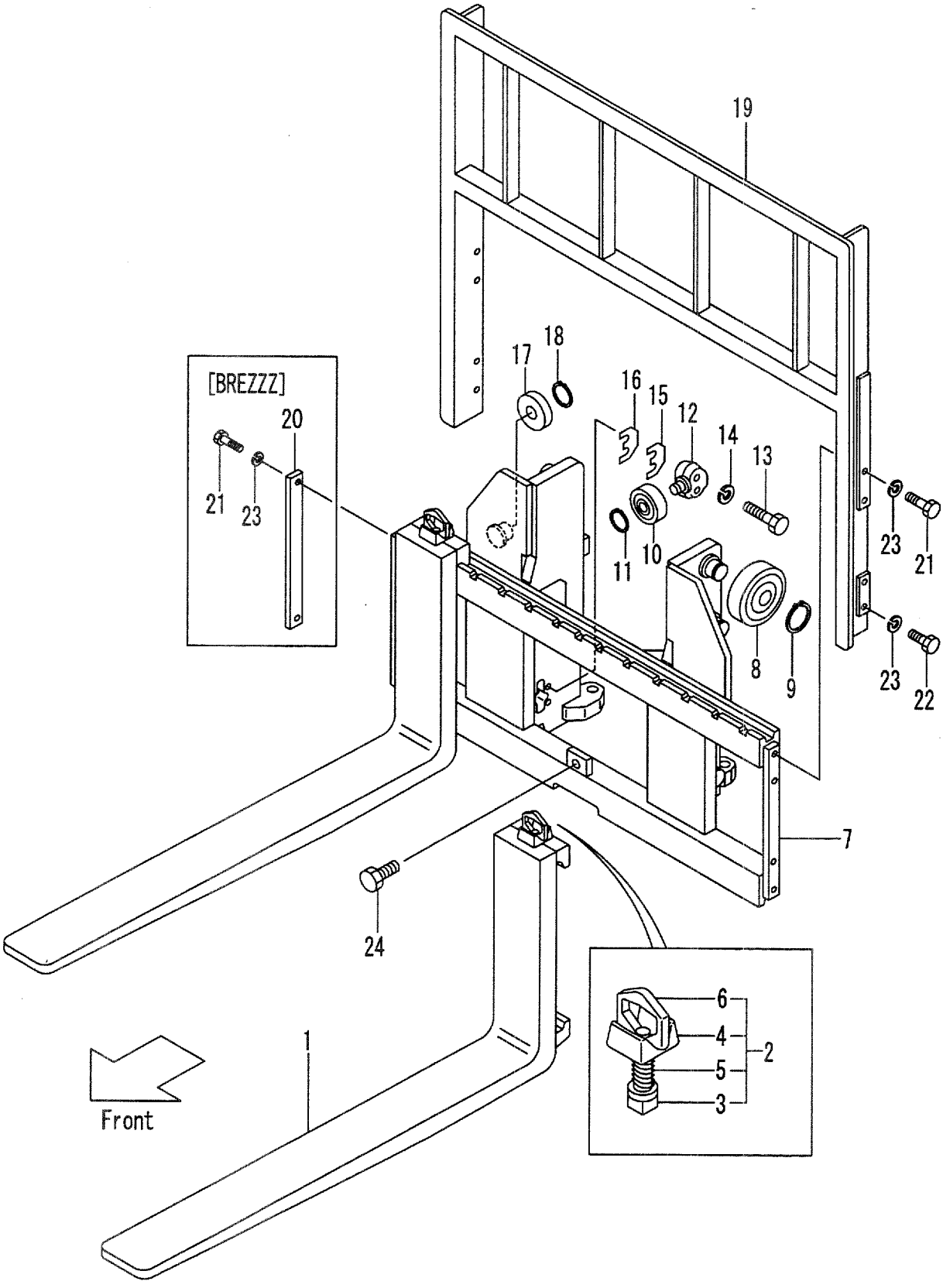

A:VM24T(FD35,40,FG35,40)

Item No	Part No.	Mark	Description		Req'd	Remarks : Serial No.
-	524T1-62011		BRACKET,LIFT	ﾌﾞﾗｹｯﾄ	1	[WF180][WF240]
-	524T1-62051		BRACKET,LIFT	ﾌﾞﾗｹｯﾄ	1	[LBR002/WF168]
-	524T7-32001		BRACKET,LIFT	ﾌﾞﾗｹｯﾄ	1	[TRB][TRV][TC]
-	524T7-32011		BRACKET,LIFT	ﾌﾞﾗｹｯﾄ	1	[TC/WF168]
-	524T7-32021		BRACKET,LIFT	ﾌﾞﾗｹｯﾄ	1	[TC/WF180]
8	23818-20701		ROLLER,END,143.5	ﾛｰﾗ	6	
-	23958-22081		ROLLER,END,144.0	ﾛｰﾗ	(6)	
9	02100-00050		RING,SNAP	ｽﾅｯﾌﾟﾘﾝｸﾞ	6	
10	22198-22341		ROLLER,END,91.5	ﾛｰﾗ	2	
11	02100-00030		RING,SNAP	ｽﾅｯﾌﾟﾘﾝｸﾞ	2	
12	24609-42131		SHAFT	ｼｬﾌﾄ	2	
13	01103-16065		BOLT	ﾎﾞﾙﾄ	4	
14	02011-00016		WASHER	ﾜｯｼｬ	4	
15	24609-42151		SHIM,T-1.0	ｼﾑ	8	
16	24609-42161		SHIM,T-0.2	ｼﾑ	8	
17	22198-22341		ROLLER,END,91.5	ﾛｰﾗ	2	
-	22198-22341		ROLLER,END,91.5	ﾛｰﾗ	2	[WF150][WF168][WF183] [WF200][LBR002/WF168]
-	22198-22341		ROLLER,END,91.5	ﾛｰﾗ	2	[TRB][TRV][TC][TC/WF168]
-	22198-22341		ROLLER,END,91.5	ﾛｰﾗ	4	[LBR002][WF180][WF240] [TC/WF180]
-	24258-33401		ROLLER,END,92.0	ﾛｰﾗ	(2)	
-	24258-33401		ROLLER,END,92.0	ﾛｰﾗ	(2)	[WF150][WF168][WF183] [WF200][LBR002/WF168]
-	24258-33401		ROLLER,END,92.0	ﾛｰﾗ	(2)	[TRB][TRV][TC][TC/WF168]
-	24258-33401		ROLLER,END,92.0	ﾛｰﾗ	(4)	[LBR002][WF180][WF240] [TC/WF180]
18	02100-00030		RING,SNAP	ｽﾅｯﾌﾟﾘﾝｸﾞ	2	
-	02100-00030		RING,SNAP	ｽﾅｯﾌﾟﾘﾝｸﾞ	2	[WF150][WF168][WF183] [WF200][LBR002/WF168]
-	02100-00030		RING,SNAP	ｽﾅｯﾌﾟﾘﾝｸﾞ	2	[TRB][TRV][TC][TC/WF168]
-	02100-00030		RING,SNAP	ｽﾅｯﾌﾟﾘﾝｸﾞ	4	[LBR002][WF180][WF240] [TC/WF180]
19	224T8-22301		BACKREST	ﾊﾞｯｸﾚｽﾄ	1	
-	524T2-74001		BACKREST	ﾊﾞｯｸﾚｽﾄ	1	[EXA][EXC]
-	524T1-64301		BACKREST	ﾊﾞｯｸﾚｽﾄ	1	[WF168][WBR]
-	524T1-64311		BACKREST	ﾊﾞｯｸﾚｽﾄ	1	[WF180][WWB]
-	224T8-22601		BACKREST,H-1300	ﾊﾞｯｸﾚｽﾄ	1	[HBR]
-	224T8-22611		BACKREST,H-1400	ﾊﾞｯｸﾚｽﾄ	1	[HBR]
-	224T8-22621		BACKREST,H-1500	ﾊﾞｯｸﾚｽﾄ	1	[HBR]
-	224T8-22631		BACKREST,H-1600	ﾊﾞｯｸﾚｽﾄ	1	[HBR]
20	24450-92021		PLATE	ﾌﾟﾚｰﾄ	2	[BREZZZ]
21	01100-14030		BOLT	ﾎﾞﾙﾄ	4	
22	01100-14025		BOLT	ﾎﾞﾙﾄ	4	
23	02010-00014		WASHER	ﾜｯｼｬ	8	
-	02010-00014		WASHER	ﾜｯｼｬ	4	[BREZZZ]
24	01184-12025		BOLT	ﾎﾞﾙﾄ	1	

FIG.153 MAST [VM24T]

(M4048310) マスト

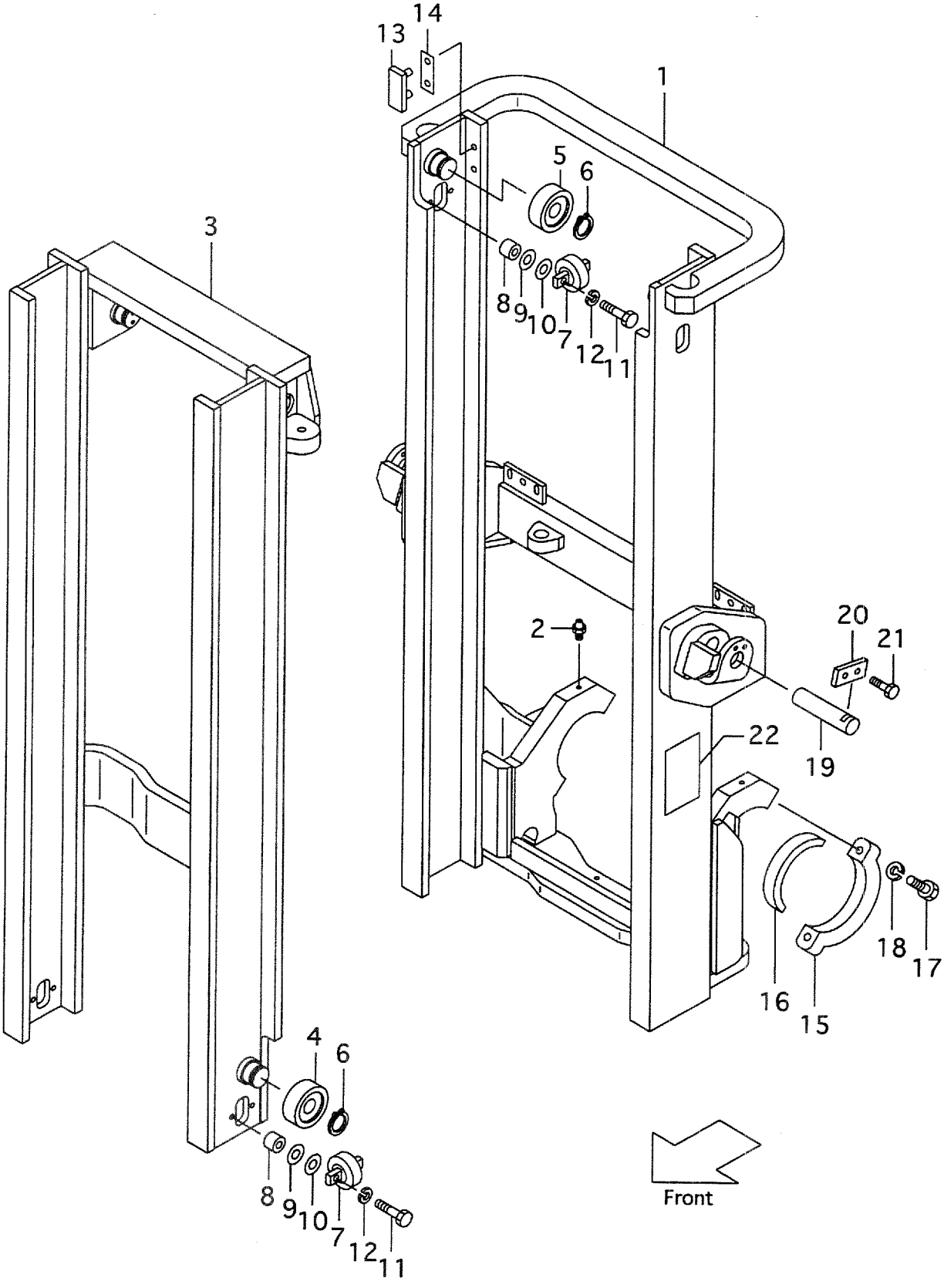

A:VM24T(FD35,40,FG35,40)

Item No	Part No.	Mark	Description	Req'd	Remarks : Serial No.
1	224T8-30011		MAST,OUTER VM250 アウタマスト	1	MAST NO.1-5999
-	224T8-30012		MAST,OUTER VM250 アウタマスト	1	MAST NO.6000-
-	224T8-30021		MAST,OUTER VM270 アウタマスト	1	MAST NO.1-5999
-	224T8-30022		MAST,OUTER VM270 アウタマスト	1	MAST NO.6000-
-	224T8-30031		MAST,OUTER VM275 アウタマスト	1	MAST NO.1-5999
-	224T8-30032		MAST,OUTER VM275 アウタマスト	1	MAST NO.6000-
-	224T8-30001		MAST,OUTER VM300 アウタマスト	1	MAST NO.1-5999
-	224T8-30002		MAST,OUTER VM300 アウタマスト	1	MAST NO.6000-
-	224T8-30041		MAST,OUTER VM325 アウタマスト	1	MAST NO.1-5999
-	224T8-30042		MAST,OUTER VM325 アウタマスト	1	MAST NO.6000-
-	224T8-30051		MAST,OUTER VM330 アウタマスト	1	MAST NO.1-5999
-	224T8-30052		MAST,OUTER VM330 アウタマスト	1	MAST NO.6000-
-	224T8-30061		MAST,OUTER VM350 アウタマスト	1	MAST NO.1-5999
-	224T8-30062		MAST,OUTER VM350 アウタマスト	1	MAST NO.6000-
-	224T8-30071		MAST,OUTER VM366 アウタマスト	1	MAST NO.1-5999
-	224T8-30072		MAST,OUTER VM366 アウタマスト	1	MAST NO.6000-
-	224T8-30081		MAST,OUTER VM370 アウタマスト	1	MAST NO.1-5999
-	224T8-30082		MAST,OUTER VM370 アウタマスト	1	MAST NO.6000-
-	224T8-30091		MAST,OUTER VM375 アウタマスト	1	MAST NO.1-5999
-	224T8-30092		MAST,OUTER VM375 アウタマスト	1	MAST NO.6000-
-	224T8-30101		MAST,OUTER VM400 アウタマスト	1	MAST NO.1-5999
-	224T8-30102		MAST,OUTER VM400 アウタマスト	1	MAST NO.6000-
-	224T8-30111		MAST,OUTER VM425 アウタマスト	1	MAST NO.1-5999
-	224T8-30112		MAST,OUTER VM425 アウタマスト	1	MAST NO.6000-
-	224T8-30121		MAST,OUTER VM450 アウタマスト	1	MAST NO.1-5999
-	224T8-30122		MAST,OUTER VM450 アウタマスト	1	MAST NO.6000-
-	224T8-30131		MAST,OUTER VM475 アウタマスト	1	MAST NO.1-5999
-	224T8-30132		MAST,OUTER VM475 アウタマスト	1	MAST NO.6000-
-	224T8-30141		MAST,OUTER VM500 アウタマスト	1	MAST NO.1-5999
-	224T8-30142		MAST,OUTER VM500 アウタマスト	1	MAST NO.6000-
-	224T8-30151		MAST,OUTER VM550 アウタマスト	1	MAST NO.1-5999
-	224T8-30152		MAST,OUTER VM550 アウタマスト	1	MAST NO.6000-
-	224T8-30161		MAST,OUTER VM600 アウタマスト	1	MAST NO.1-5999
-	224T8-30162		MAST,OUTER VM600 アウタマスト	1	MAST NO.6000-
-	524T3-86011		MAST,OUTER VM250 アウタマスト	1	MAST NO.1-5999 [RW][HC][EXR]
-	524T3-86012		MAST,OUTER VM250 アウタマスト	1	MAST NO.6000- [RW][HC][EXR]
-	524T3-86021		MAST,OUTER VM270 アウタマスト	1	MAST NO.1-5999 [RW][HC][EXR]
-	524T3-86022		MAST,OUTER VM270 アウタマスト	1	MAST NO.6000- [RW][HC][EXR]
-	524T3-86031		MAST,OUTER VM275 アウタマスト	1	MAST NO.1-5999 [RW][HC][EXR]
-	524T3-86032		MAST,OUTER VM275 アウタマスト	1	MAST NO.6000- [RW][HC][EXR]
-	524T3-86001		MAST,OUTER VM300 アウタマスト	1	MAST NO.1-5999 [RW][HC][EXR]
-	524T3-86002		MAST,OUTER VM300 アウタマスト	1	MAST NO.6000- [RW][HC][EXR]

FIG.153 MAST [VM24T]

(M4048310) マスト

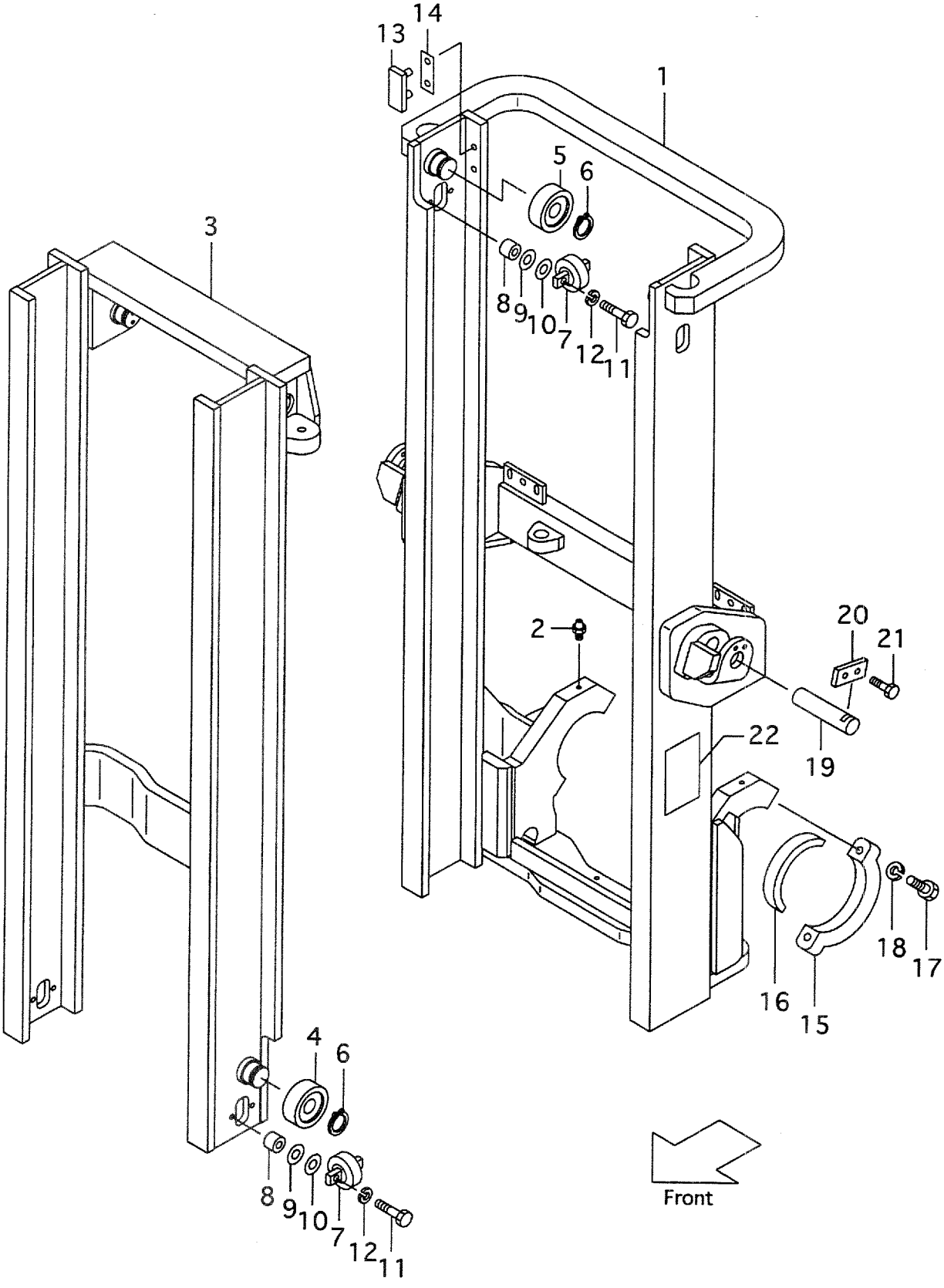

A:VM24T(FD35,40,FG35,40)

Item No	Part No.	Mark	Description	Req'd	Remarks : Serial No.
-	524T3-86041		MAST,OUTER VM325 アウタマスト	1	MAST NO.1-5999 [RW][HC][EXR]
-	524T3-86042		MAST,OUTER VM325 アウタマスト	1	MAST NO.6000- [RW][HC][EXR]
-	524T3-86051		MAST,OUTER VM330 アウタマスト	1	MAST NO.1-5999 [RW][HC][EXR]
-	524T3-86052		MAST,OUTER VM330 アウタマスト	1	MAST NO.6000- [RW][HC][EXR]
-	524T3-86061		MAST,OUTER VM350 アウタマスト	1	MAST NO.1-5999 [RW][HC][EXR]
-	524T3-86062		MAST,OUTER VM350 アウタマスト	1	MAST NO.6000- [RW][HC][EXR]
-	524T3-86071		MAST,OUTER VM366 アウタマスト	1	MAST NO.1-5999 [RW][HC][EXR]
-	524T3-86072		MAST,OUTER VM366 アウタマスト	1	MAST NO.6000- [RW][HC][EXR]
-	524T3-86081		MAST,OUTER VM370 アウタマスト	1	MAST NO.1-5999 [RW][HC][EXR]
-	524T3-86082		MAST,OUTER VM370 アウタマスト	1	MAST NO.6000- [RW][HC][EXR]
-	524T3-86091		MAST,OUTER VM375 アウタマスト	1	MAST NO.1-5999 [RW][HC][EXR]
-	524T3-86092		MAST,OUTER VM375 アウタマスト	1	MAST NO.6000- [RW][HC][EXR]
-	524T3-86101		MAST,OUTER VM400 アウタマスト	1	MAST NO.1-5999 [RW][HC][EXR]
-	524T3-86102		MAST,OUTER VM400 アウタマスト	1	MAST NO.6000- [RW][HC][EXR]
-	524T3-86111		MAST,OUTER VM425 アウタマスト	1	MAST NO.1-5999 [RW][HC][EXR]
-	524T3-86112		MAST,OUTER VM425 アウタマスト	1	MAST NO.6000- [RW][HC][EXR]
-	524T3-86121		MAST,OUTER VM450 アウタマスト	1	MAST NO.1-5999 [RW][HC][EXR]
-	524T3-86122		MAST,OUTER VM450 アウタマスト	1	MAST NO.6000- [RW][HC][EXR]
-	524T3-86131		MAST,OUTER VM475 アウタマスト	1	MAST NO.1-5999 [RW][HC][EXR]
-	524T3-86132		MAST,OUTER VM475 アウタマスト	1	MAST NO.6000- [RW][HC][EXR]
-	524T3-86141		MAST,OUTER VM500 アウタマスト	1	MAST NO.1-5999 [RW][HC][EXR]
-	524T3-86142		MAST,OUTER VM500 アウタマスト	1	MAST NO.6000- [RW][HC][EXR]
-	524T3-86151		MAST,OUTER VM550 アウタマスト	1	MAST NO.1-5999 [RW][HC][EXR]
-	524T3-86152		MAST,OUTER VM550 アウタマスト	1	MAST NO.6000- [RW][HC][EXR]
-	524T3-86161		MAST,OUTER VM600 アウタマスト	1	MAST NO.1-5999 [RW][HC][EXR]

FIG.153 MAST [VM24T]

(M4048310) マスト

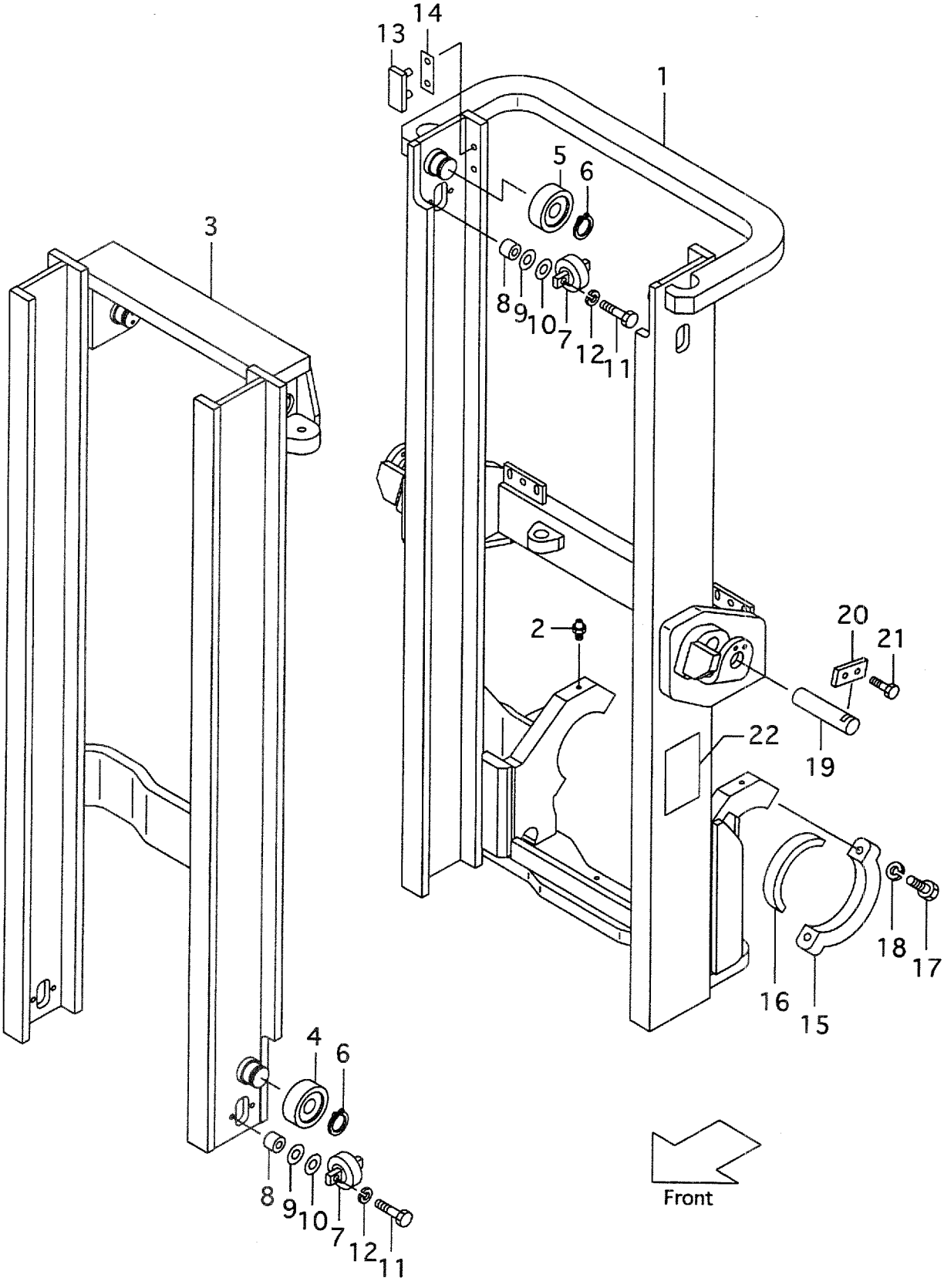

A:VM24T(FD35,40,FG35,40)

Item No	Part No.	Mark	Description		Req'd	Remarks : Serial No.
-	524T3-86162		MAST,OUTER VM600	ｱｳﾀﾏｽﾄ	1	MAST NO.6000- [RW][HC][EXR]
2	04901-00160		FITTING	ﾌｨｯﾃｨﾝｸﾞ	2	
3	224T8-30211		MAST,INNER VM250	ｲﾝﾅﾏｽﾄ	1	MAST NO.1-5999
-	224T8-30212		MAST,INNER VM250	ｲﾝﾅﾏｽﾄ	1	MAST NO.6000-
-	224T8-30221		MAST,INNER VM270	ｲﾝﾅﾏｽﾄ	1	MAST NO.1-5999
-	224T8-30222		MAST,INNER VM270	ｲﾝﾅﾏｽﾄ	1	MAST NO.6000-
-	224T8-30231		MAST,INNER VM275	ｲﾝﾅﾏｽﾄ	1	MAST NO.1-5999
-	224T8-30232		MAST,INNER VM275	ｲﾝﾅﾏｽﾄ	1	MAST NO.6000-
-	224T8-30201		MAST,INNER VM300	ｲﾝﾅﾏｽﾄ	1	MAST NO.1-5999
-	224T8-30202		MAST,INNER VM300	ｲﾝﾅﾏｽﾄ	1	MAST NO.6000-
-	224T8-30241		MAST,INNER VM325	ｲﾝﾅﾏｽﾄ	1	MAST NO.1-5999
-	224T8-30242		MAST,INNER VM325	ｲﾝﾅﾏｽﾄ	1	MAST NO.6000-
-	224T8-30251		MAST,INNER VM330	ｲﾝﾅﾏｽﾄ	1	MAST NO.1-5999
-	224T8-30252		MAST,INNER VM330	ｲﾝﾅﾏｽﾄ	1	MAST NO.6000-
-	224T8-30261		MAST,INNER VM350	ｲﾝﾅﾏｽﾄ	1	MAST NO.1-5999
-	224T8-30262		MAST,INNER VM350	ｲﾝﾅﾏｽﾄ	1	MAST NO.6000-
-	224T8-30271		MAST,INNER VM366	ｲﾝﾅﾏｽﾄ	1	MAST NO.1-5999
-	224T8-30272		MAST,INNER VM366	ｲﾝﾅﾏｽﾄ	1	MAST NO.6000-
-	224T8-30281		MAST,INNER VM370	ｲﾝﾅﾏｽﾄ	1	MAST NO.1-5999
-	224T8-30282		MAST,INNER VM370	ｲﾝﾅﾏｽﾄ	1	MAST NO.6000-
-	224T8-30291		MAST,INNER VM375	ｲﾝﾅﾏｽﾄ	1	MAST NO.1-5999
-	224T8-30292		MAST,INNER VM375	ｲﾝﾅﾏｽﾄ	1	MAST NO.6000-
-	224T8-30301		MAST,INNER VM400	ｲﾝﾅﾏｽﾄ	1	MAST NO.1-5999
-	224T8-30302		MAST,INNER VM400	ｲﾝﾅﾏｽﾄ	1	MAST NO.6000-
-	224T8-30311		MAST,INNER VM425	ｲﾝﾅﾏｽﾄ	1	MAST NO.1-5999
-	224T8-30312		MAST,INNER VM425	ｲﾝﾅﾏｽﾄ	1	MAST NO.6000-
-	224T8-30321		MAST,INNER VM450	ｲﾝﾅﾏｽﾄ	1	MAST NO.1-5999
-	224T8-30322		MAST,INNER VM450	ｲﾝﾅﾏｽﾄ	1	MAST NO.6000-
-	224T8-30331		MAST,INNER VM475	ｲﾝﾅﾏｽﾄ	1	MAST NO.1-5999
-	224T8-30332		MAST,INNER VM475	ｲﾝﾅﾏｽﾄ	1	MAST NO.6000-
-	224T8-30341		MAST,INNER VM500	ｲﾝﾅﾏｽﾄ	1	MAST NO.1-5999
-	224T8-30342		MAST,INNER VM500	ｲﾝﾅﾏｽﾄ	1	MAST NO.6000-
-	224T8-30351		MAST,INNER VM550	ｲﾝﾅﾏｽﾄ	1	MAST NO.1-5999
-	224T8-30352		MAST,INNER VM550	ｲﾝﾅﾏｽﾄ	1	MAST NO.6000-
-	224T8-30361		MAST,INNER VM600	ｲﾝﾅﾏｽﾄ	1	MAST NO.1-5999
-	224T8-30362		MAST,INNER VM600	ｲﾝﾅﾏｽﾄ	1	MAST NO.6000-
4	23818-20701		ROLLER,END,143.5	ﾛｰﾗ	2	
-	23958-22081		ROLLER,END,144.0	ﾛｰﾗ	(2)	
5	23818-20701		ROLLER,END,143.5	ﾛｰﾗ	2	
6	02100-00050		RING,SNAP	ｽﾅｯﾌﾟﾘﾝｸﾞ	4	
7	23818-30301		ROLLER,SIDE	ﾛｰﾗ	4	
8	23818-30071		SPACER	ｽﾍﾟｰｻ	8	MAST NO.1-5999
-	224T8-31111		SPACER	ｽﾍﾟｰｻ	8	MAST NO.6000-
9	22548-34051		SHIM,T-0.5	ｼﾑ	16	
10	22548-34061		SHIM,T-1.0	ｼﾑ	8	
11	01100-12045		BOLT	ﾎﾞﾙﾄ	8	
12	02010-00012		WASHER	ﾜｯｼｬ	8	
13	22678-32001		SLIPPER	ｽﾘｯﾊﾟ	2	
14	22679-43231		SHIM	ｼﾑ	4	

FIG.153 MAST [VM24T]

(M4048310) マスト

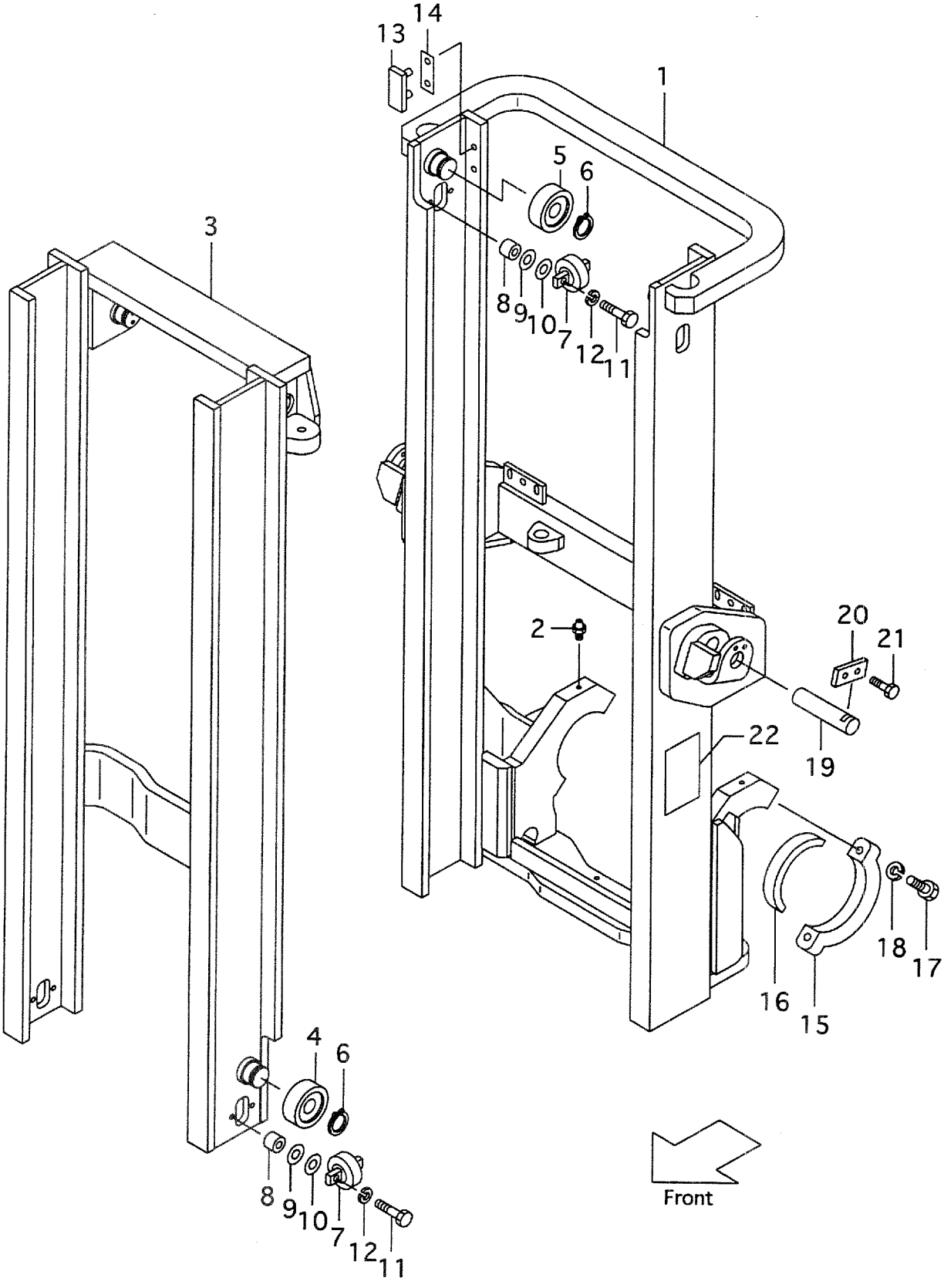

A:VM24T(FD35,40,FG35,40)

Item No	Part No.	Mark	Description		Req'd	Remarks : Serial No.
15	224T8-02201		CAP	ｷｬｯﾌﾟ	2	
16	224T8-02001		BUSHING	ﾌﾞｯｼﾝｸﾞ	2	
17	01103-20085		BOLT	ﾎﾞﾙﾄ	4	
18	02010-00020		WASHER	ﾜｯｼｬ	4	
19	224T8-52501		PIN	ﾋﾟﾝ	2	
20	23648-50161		PLATE	ﾌﾟﾚｰﾄ	2	
21	01184-10020		BOLT	ﾎﾞﾙﾄ	4	
22	23678-06002		PLATE,NAME	ﾌﾟﾚｰﾄ	1	

FIG.154 LAMP GUARD [(HL,HLG/HL,BKH)/VM24T]

(M4048360) ﾗﾝﾌﾟｶﾞｰﾄﾞ

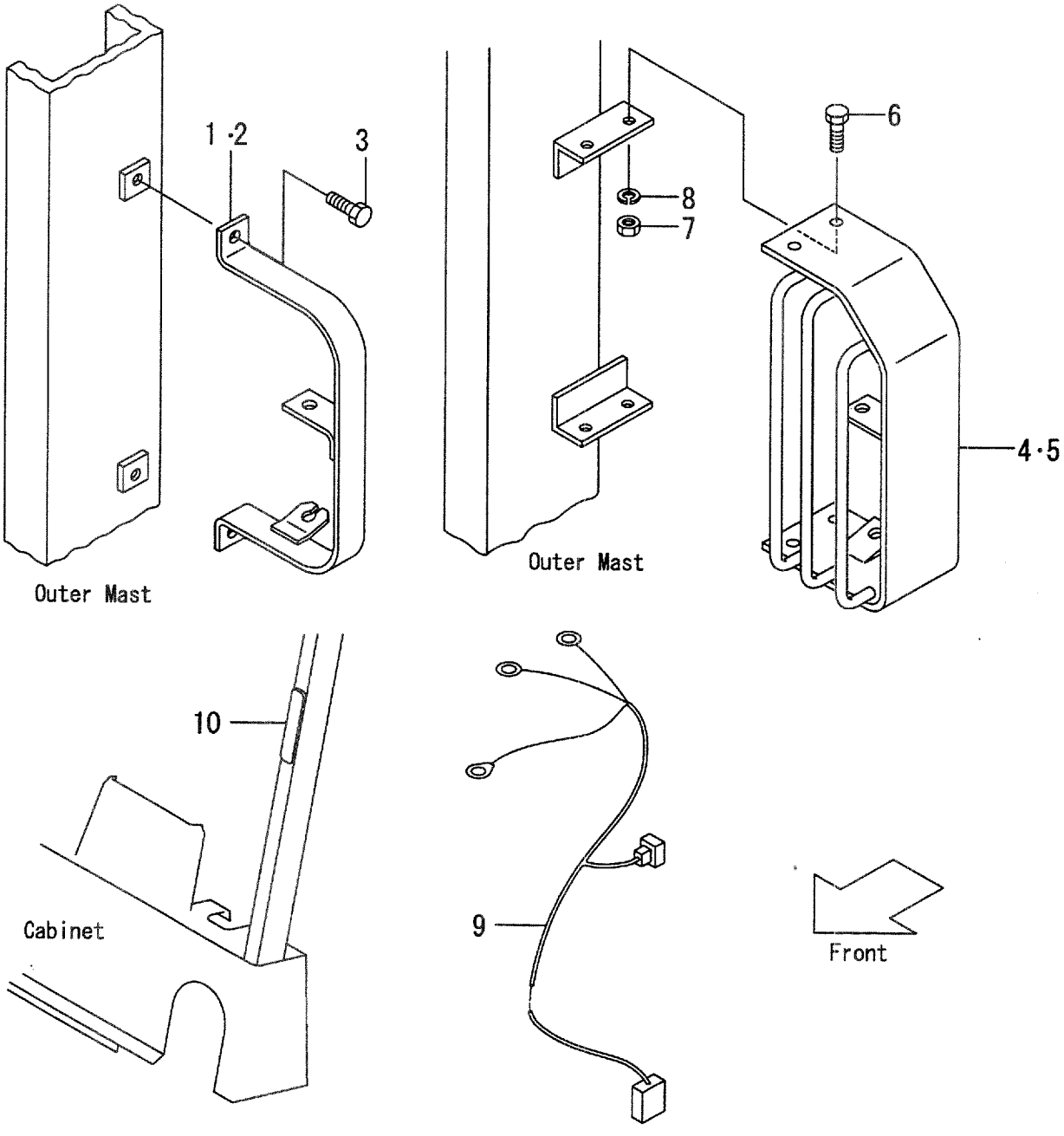

A:VM24T(FD35,40,FG35,40):1-5725

Item No	Part No.	Mark	Description		Req'd	Remarks : Serial No.
1	214A2-43121		BRACKET,LH	ﾌﾞﾗｹｯﾄ	1	[HL]
2	214A2-43131		BRACKET,RH	ﾌﾞﾗｹｯﾄ	1	[HL]
3	01184-12020		BOLT	ﾎﾞﾙﾄ	4	[HL]
4	210F2-42051		GUARD,HEAD-LAMP,LH	ｶﾞｰﾄﾞ	1	[HLG/HL][BKH]
5	210F2-42071		GUARD,HEAD-LAMP,RH	ｶﾞｰﾄﾞ	1	[HLG/HL][BKH]
6	01100-12030		BOLT	ﾎﾞﾙﾄ	8	[HLG/HL][BKH]
7	02010-00012		WASHER	ﾜｯｼｬ	8	[HLG/HL][BKH]
8	01400-00012		NUT	ﾅｯﾄ	8	[HLG/HL][BKH]
9	224W2-43081		WIRE-HARNESS	ﾜｲﾔﾊｰﾈｽ	2	[HL/VM250-275] [HGL/HL/VM250-275] [BKH/VM250-275]
-	224W2-43091		WIRE-HARNESS	ﾜｲﾔﾊｰﾈｽ	2	[HL/VM300-600] [HGL/HL/VM300-600] [BKH/VM300-600]
10	524W5-42061		BRACKET	ﾌﾞﾗｹｯﾄ	2	[HL][HLG/HL][BKH]

FIG.154A LAMP GUARD [(HL,BKH)/VM24T]

(M4048361) ﾗﾝﾌﾟｶﾞｰﾄﾞ

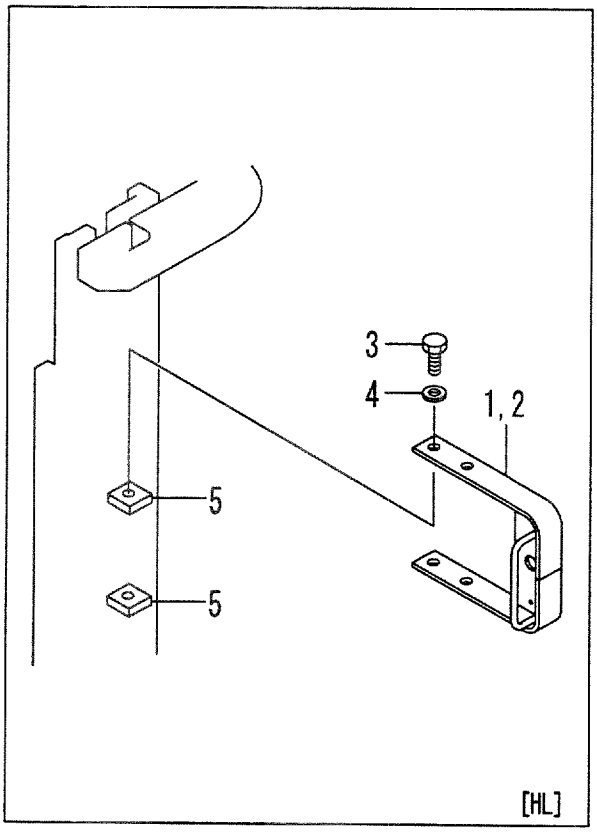

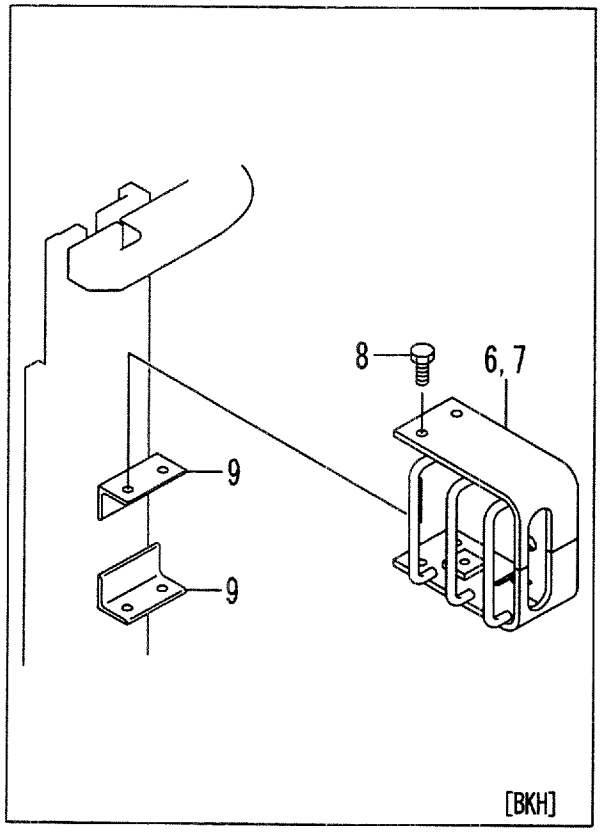

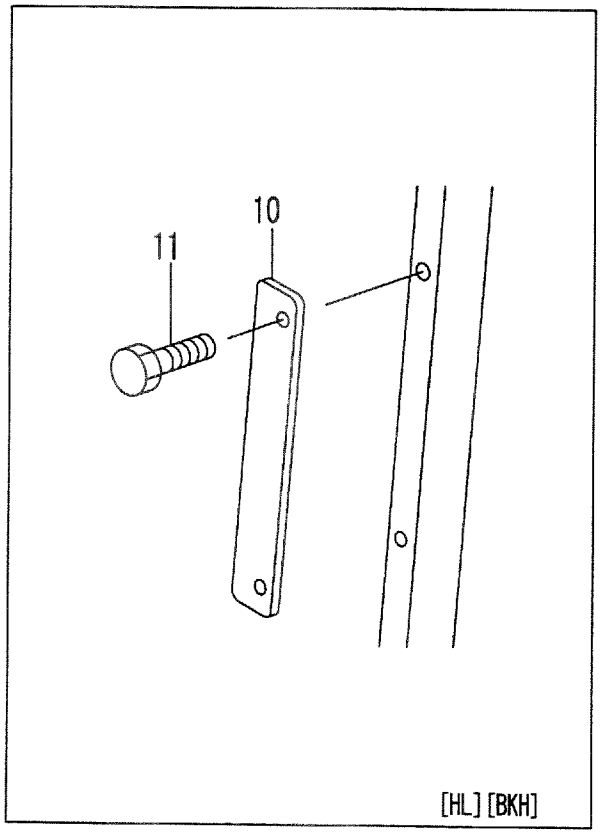

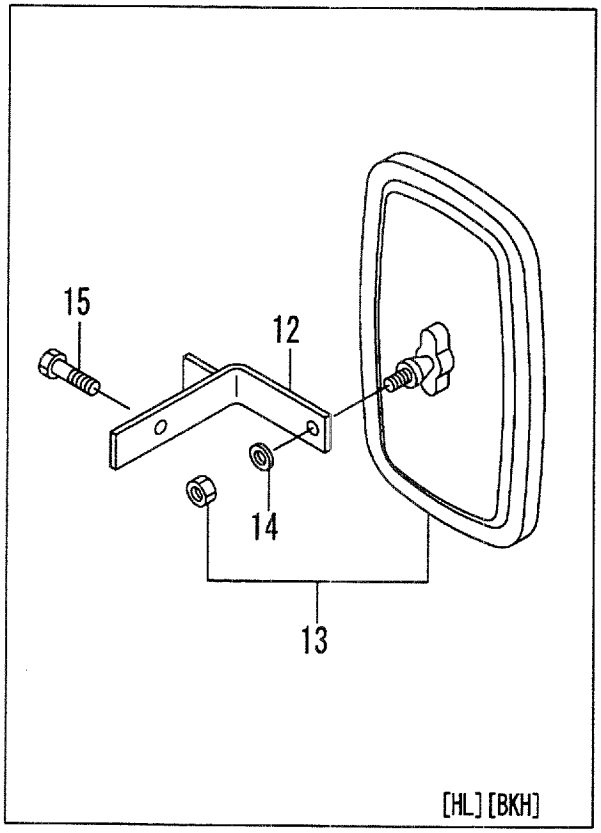

A:VM24T(FD35,40,FG35,40):5726-

Item No	Part No.	Mark	Description		Req'd	Remarks : Serial No.
1	534A9-22011		BRACKET,LH	ﾌﾞﾗｹｯﾄ	1	[HL]
2	534A9-22001		BRACKET,RH	ﾌﾞﾗｹｯﾄ	1	[HL]
3	01100-12020		BOLT	ﾎﾞﾙﾄ	4	[HL]
4	02010-00012		WASHER	ﾜｯｼｬ	4	[HL]
5	534A9-22101		BLOCK,TAPPED	ﾌﾞﾛｯｸ	4	[HL]
6	534A4-22011		GUARD,LH	ｶﾞｰﾄﾞ	1	[BKH]
7	534A4-22001		GUARD,RH	ｶﾞｰﾄﾞ	1	[BKH]
8	01184-12020		BOLT & WASHER	ﾎﾞﾙﾄ&ﾜｯｼｬ	8	[BKH]
9	534A4-22101		BRACKET	ﾌﾞﾗｹｯﾄ	4	[BKH]
10	534A9-22301		PLATE	ﾌﾟﾚｰﾄ	2	[HL][BKH]
11	01100-08012		BOLT	ﾎﾞﾙﾄ	4	[HL][BKH]
12	535C9-22401		BRACKET	ﾌﾞﾗｹｯﾄ	2	[HL][BKH]
13	239A9-92001		MIRROR	ﾐﾗｰ	2	[HL][BKH]
14	222A9-32011		WASHER	ﾜｯｼｬ	2	[HL][BKH]
15	514A5-12021		BOLT	ﾎﾞﾙﾄ	2	[HL][BKH]
16	535C9-22301	+	WIRE-HARNESS	ﾜｲﾔﾊｰﾈｽ	2	[HL][BKH]
17	27732-42221	+	CLAMP	ｸﾗﾝﾌﾟ	4	[HL][BKH]
18	04913-11380	+	BAND	ﾊﾞﾝﾄﾞ	6	[HL][BKH]

FIG.155 LIFT CYLINDER [VM24T]

(M4048410) リフトシリンダ

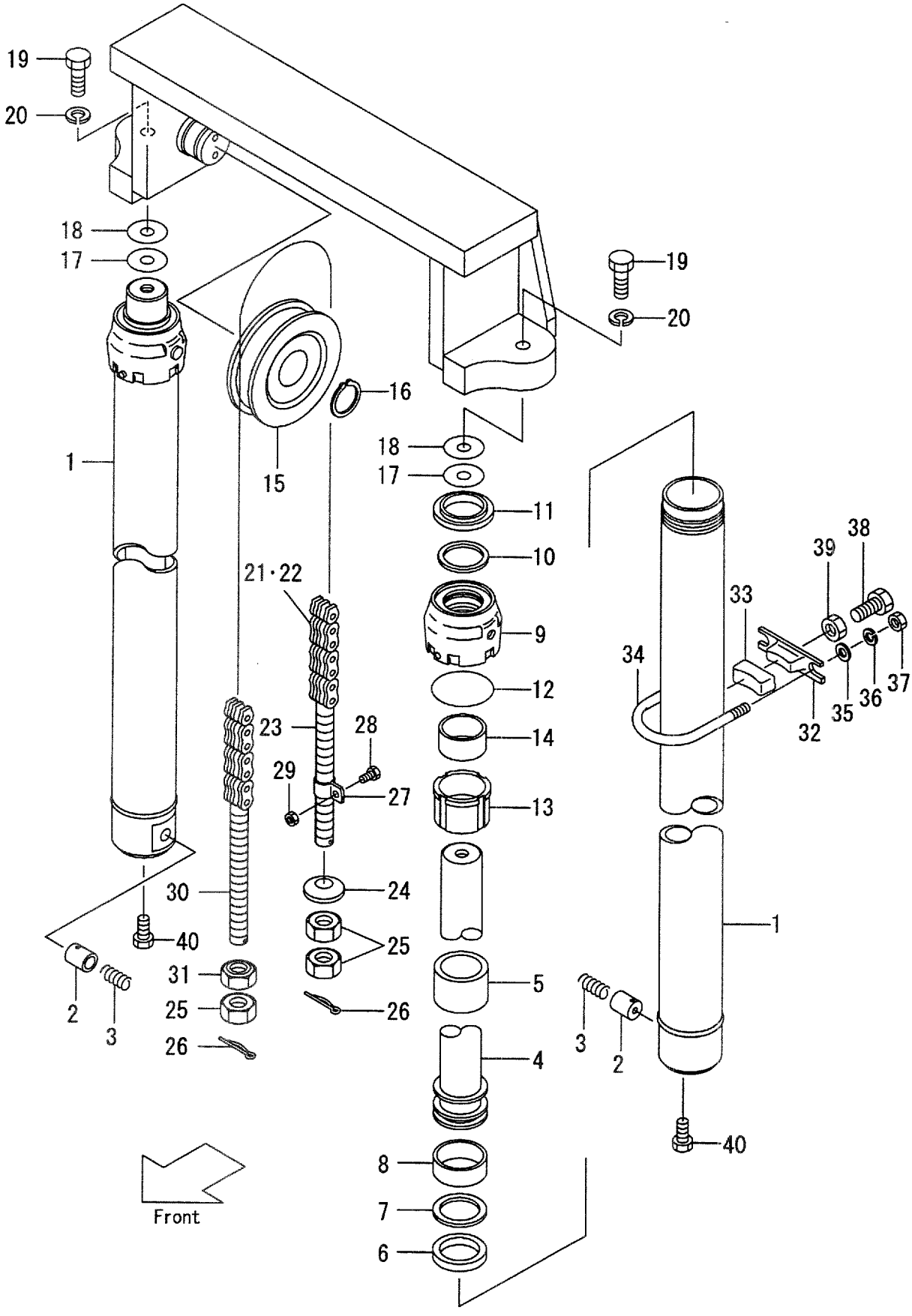

A:VM24T(FD35,40,FG35,40)

Item No	Part No.	Mark	Description		Req'd	Remarks : Serial No.
A1	224T8-40011		CYL-ASSY,LIFT VM250	ﾘﾌﾄｼﾘﾝﾀﾞｱｯｾﾝ	2	INC.1-19
-	224T8-40021		CYL-ASSY,LIFT VM270	ﾘﾌﾄｼﾘﾝﾀﾞｱｯｾﾝ	2	INC.1-19
-	224T8-40031		CYL-ASSY,LIFT VM275	ﾘﾌﾄｼﾘﾝﾀﾞｱｯｾﾝ	2	INC.1-19
-	224T8-40001		CYL-ASSY,LIFT VM300	ﾘﾌﾄｼﾘﾝﾀﾞｱｯｾﾝ	2	INC.1-19
-	224T8-40041		CYL-ASSY,LIFT VM325	ﾘﾌﾄｼﾘﾝﾀﾞｱｯｾﾝ	2	INC.1-19
-	224T8-40051		CYL-ASSY,LIFT VM330	ﾘﾌﾄｼﾘﾝﾀﾞｱｯｾﾝ	2	INC.1-19
-	224T8-40061		CYL-ASSY,LIFT VM350	ﾘﾌﾄｼﾘﾝﾀﾞｱｯｾﾝ	2	INC.1-19
-	224T8-40071		CYL-ASSY,LIFT VM366	ﾘﾌﾄｼﾘﾝﾀﾞｱｯｾﾝ	2	INC.1-19
-	224T8-40081		CYL-ASSY,LIFT VM370	ﾘﾌﾄｼﾘﾝﾀﾞｱｯｾﾝ	2	INC.1-19
-	224T8-40091		CYL-ASSY,LIFT VM375	ﾘﾌﾄｼﾘﾝﾀﾞｱｯｾﾝ	2	INC.1-19
-	224T8-40101		CYL-ASSY,LIFT VM400	ﾘﾌﾄｼﾘﾝﾀﾞｱｯｾﾝ	2	INC.1-19
-	224T8-40111		CYL-ASSY,LIFT VM425	ﾘﾌﾄｼﾘﾝﾀﾞｱｯｾﾝ	2	INC.1-19
-	224T8-40121		CYL-ASSY,LIFT VM450	ﾘﾌﾄｼﾘﾝﾀﾞｱｯｾﾝ	2	INC.1-19
-	224T8-40131		CYL-ASSY,LIFT VM475	ﾘﾌﾄｼﾘﾝﾀﾞｱｯｾﾝ	2	INC.1-19
-	224T8-40141		CYL-ASSY,LIFT VM500	ﾘﾌﾄｼﾘﾝﾀﾞｱｯｾﾝ	2	INC.1-19
-	224T8-40151		CYL-ASSY,LIFT VM550	ﾘﾌﾄｼﾘﾝﾀﾞｱｯｾﾝ	2	INC.1-19
-	224T8-40161		CYL-ASSY,LIFT VM600	ﾘﾌﾄｼﾘﾝﾀﾞｱｯｾﾝ	2	INC.1-19
1	224T8-40212		TUBE VM250	ﾁｭｰﾌﾞ	2	
-	224T8-40222		TUBE VM270	ﾁｭｰﾌﾞ	2	
-	224T8-40232		TUBE VM275	ﾁｭｰﾌﾞ	2	
-	224T8-40202		TUBE VM300	ﾁｭｰﾌﾞ	2	
-	224T8-40242		TUBE VM325	ﾁｭｰﾌﾞ	2	
-	224T8-40252		TUBE VM330	ﾁｭｰﾌﾞ	2	
-	224T8-40262		TUBE VM350	ﾁｭｰﾌﾞ	2	
-	224T8-40272		TUBE VM366	ﾁｭｰﾌﾞ	2	
-	224T8-40282		TUBE VM370	ﾁｭｰﾌﾞ	2	
-	224T8-40292		TUBE VM375	ﾁｭｰﾌﾞ	2	
-	224T8-40302		TUBE VM400	ﾁｭｰﾌﾞ	2	
-	224T8-40312		TUBE VM425	ﾁｭｰﾌﾞ	2	
-	224T8-40322		TUBE VM450	ﾁｭｰﾌﾞ	2	
-	224T8-40332		TUBE VM475	ﾁｭｰﾌﾞ	2	
-	224T8-40342		TUBE VM500	ﾁｭｰﾌﾞ	2	
-	224T8-40352		TUBE VM550	ﾁｭｰﾌﾞ	2	
-	224T8-40362		TUBE VM600	ﾁｭｰﾌﾞ	2	
2	224T8-42801		PISTON	ﾋﾟｽﾄﾝ	2	
3	25908-44281		SPRING	ｽﾌﾟﾘﾝｸﾞ	2	
4	224T8-40411		ROD,PISTON VM250	ﾛｯﾄﾞ	2	
-	224T8-40421		ROD,PISTON VM270	ﾛｯﾄﾞ	2	
-	224T8-40431		ROD,PISTON VM275	ﾛｯﾄﾞ	2	
-	224T8-40401		ROD,PISTON VM300	ﾛｯﾄﾞ	2	
-	224T8-40441		ROD,PISTON VM325	ﾛｯﾄﾞ	2	
-	224T8-40451		ROD,PISTON VM330	ﾛｯﾄﾞ	2	
-	224T8-40461		ROD,PISTON VM350	ﾛｯﾄﾞ	2	
-	224T8-40471		ROD,PISTON VM366	ﾛｯﾄﾞ	2	
-	224T8-40481		ROD,PISTON VM370	ﾛｯﾄﾞ	2	
-	224T8-40491		ROD,PISTON VM375	ﾛｯﾄﾞ	2	
-	224T8-40501		ROD,PISTON VM400	ﾛｯﾄﾞ	2	
-	224T8-40511		ROD,PISTON VM425	ﾛｯﾄﾞ	2	
-	224T8-40521		ROD,PISTON VM450	ﾛｯﾄﾞ	2	
-	224T8-40531		ROD,PISTON VM475	ﾛｯﾄﾞ	2	

FIG.155 LIFT CYLINDER [VM24T]

(M4048410) リフトシリンダ

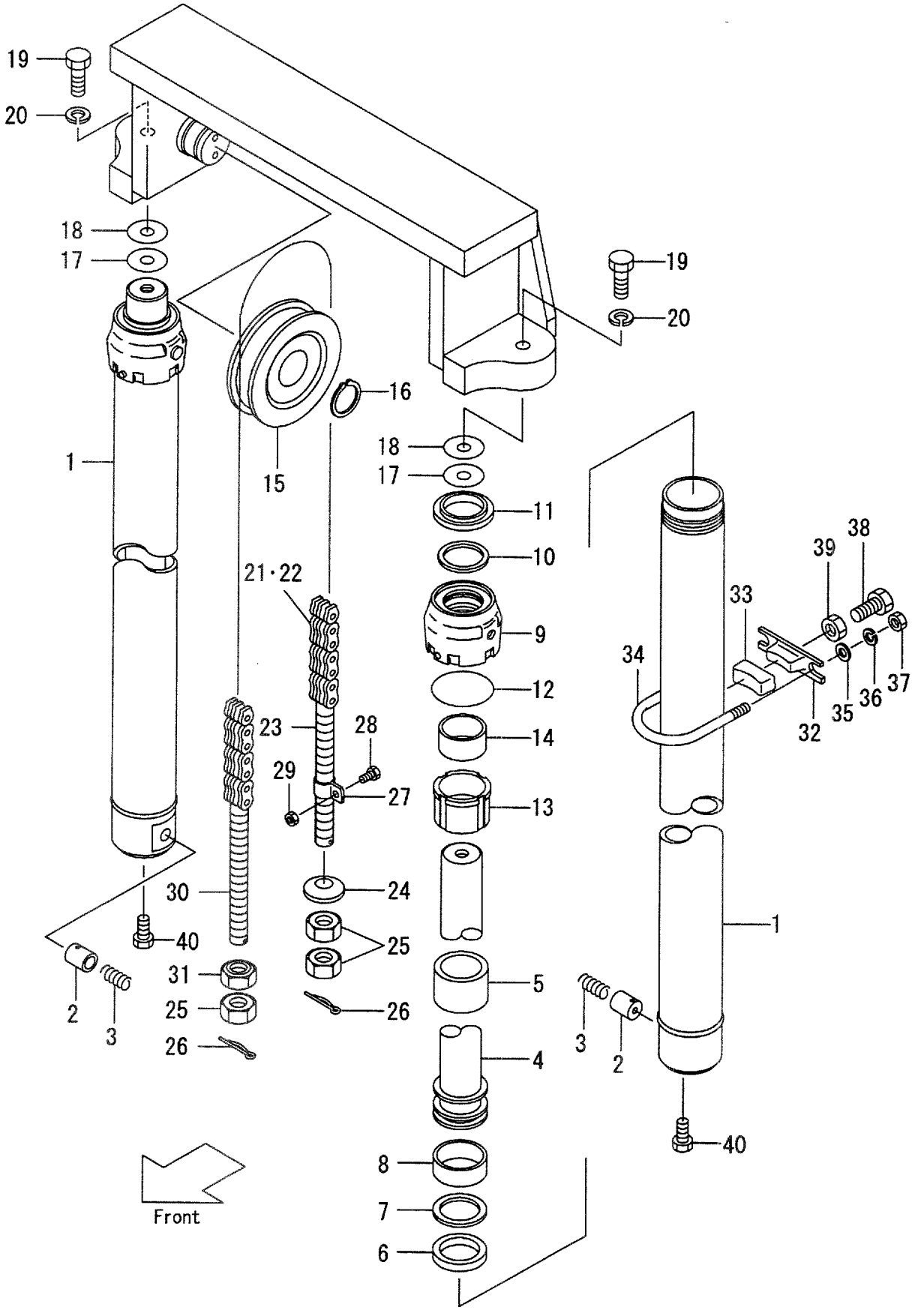

A:VM24T(FD35,40,FG35,40)

Item No	Part No.	Mark	Description		Req'd	Remarks : Serial No.
-	224T8-40541		ROD,PISTON VM500	ﾛｯﾄﾞ	2	
-	224T8-40551		ROD,PISTON VM550	ﾛｯﾄﾞ	2	
-	224T8-40561		ROD,PISTON VM600	ﾛｯﾄﾞ	2	
5	224T8-42471		SPACER	ｽﾍﾟｰｻ	2	(VM400-500)
-	224T8-42481		SPACER	ｽﾍﾟｰｻ	2	(VM550-600)
6	224T8-42521	*	PACKING	ﾊﾟｯｷﾝｸﾞ	2	
7	224T8-42541	*	RING,BACK-UP	ﾘﾝｸﾞ	2	
8	224T8-42531	*	WEARING	ｳｴｱﾘﾝｸﾞ	2	
9	224T8-42402		CAP	ｷｬｯﾌﾟ	2	
10	224T8-46011	*	PACKING	ﾊﾟｯｷﾝｸﾞ	2	
11	224T8-46001	*	SEAL,DUST	ｼｰﾙ	2	
12	03340-00100	*	O-RING	Oﾘﾝｸﾞ	2	
13	224T8-42412		SLEEVE	ｽﾘｰﾌﾞ	2	
14	23460-53171		BUSHING	ﾌﾞｯｼﾝｸﾞ	2	
15	24609-41241		SHEAVE	ｼｰﾌﾞ	2	
16	02100-00050		RING,SNAP	ｽﾅｯﾌﾟﾘﾝｸﾞ	2	
17	24319-45781		SHIM,T-0.2	ｼﾑ	4	
18	24319-45791		SHIM,T-1.0	ｼﾑ	2	
19	01103-16045		BOLT	ﾎﾞﾙﾄ	2	
20	02011-00016		WASHER	ﾜｯｼｬ	2	
21	23918-45911		CHAIN,LEAF VM250	ﾁｪｰﾝ	2	INC.22
-	23918-45991		CHAIN,LEAF VM270	ﾁｪｰﾝ	2	INC.22
-	23918-46011		CHAIN,LEAF VM275	ﾁｪｰﾝ	2	INC.22
-	23918-46111		CHAIN,LEAF VM300	ﾁｪｰﾝ	2	INC.22
-	23918-46211		CHAIN,LEAF VM325	ﾁｪｰﾝ	2	INC.22
-	23918-46231		CHAIN,LEAF VM330	ﾁｪｰﾝ	2	INC.22
-	23918-46311		CHAIN,LEAF VM350	ﾁｪｰﾝ	2	INC.22
-	23918-46371		CHAIN,LEAF VM366	ﾁｪｰﾝ	2	INC.22
-	23918-46391		CHAIN,LEAF VM370	ﾁｪｰﾝ	2	INC.22
-	23918-46411		CHAIN,LEAF VM375	ﾁｪｰﾝ	2	INC.22
-	23918-46131		CHAIN,LEAF VM400	ﾁｪｰﾝ	2	INC.22
-	23918-46191		CHAIN,LEAF VM425	ﾁｪｰﾝ	2	INC.22
-	23918-46231		CHAIN,LEAF VM450	ﾁｪｰﾝ	2	INC.22
-	23918-46331		CHAIN,LEAF VM475	ﾁｪｰﾝ	2	INC.22
-	23918-46431		CHAIN,LEAF VM500	ﾁｪｰﾝ	2	INC.22
-	23918-46451		CHAIN,LEAF VM550	ﾁｪｰﾝ	2	INC.22
-	23918-46551		CHAIN,LEAF VM600	ﾁｪｰﾝ	2	INC.22
22	23958-42921		LINK	ﾘﾝｸ	2	
23	24329-45441		PIN	ﾋﾟﾝ	2	
24	24319-45751		CORN	ｺｰﾝ	2	
25	01402-00022		NUT	ﾅｯﾄ	2	
26	02200-03040		PIN,COTTER	ﾋﾟﾝ	4	
27	224T8-42621		CLIP	ｸﾘｯﾌﾟ	2	
28	01183-06016		BOLT	ﾎﾞﾙﾄ	2	
29	01400-00006		NUT	ﾅｯﾄ	2	
30	23918-42681		PIN	ﾋﾟﾝ	2	
31	23818-30271		NUT	ﾅｯﾄ	2	
32	224T8-42711		SUPPORT	ｻﾎﾟｰﾄ	2	(VM250-550)
-	224T8-42711		SUPPORT	ｻﾎﾟｰﾄ	4	(VM600)
33	214A8-42631		RUBBER	ﾗﾊﾞｰ	2	(VM250-550)

FIG.155 LIFT CYLINDER [VM24T]

(M4048410) リフトシリンダ

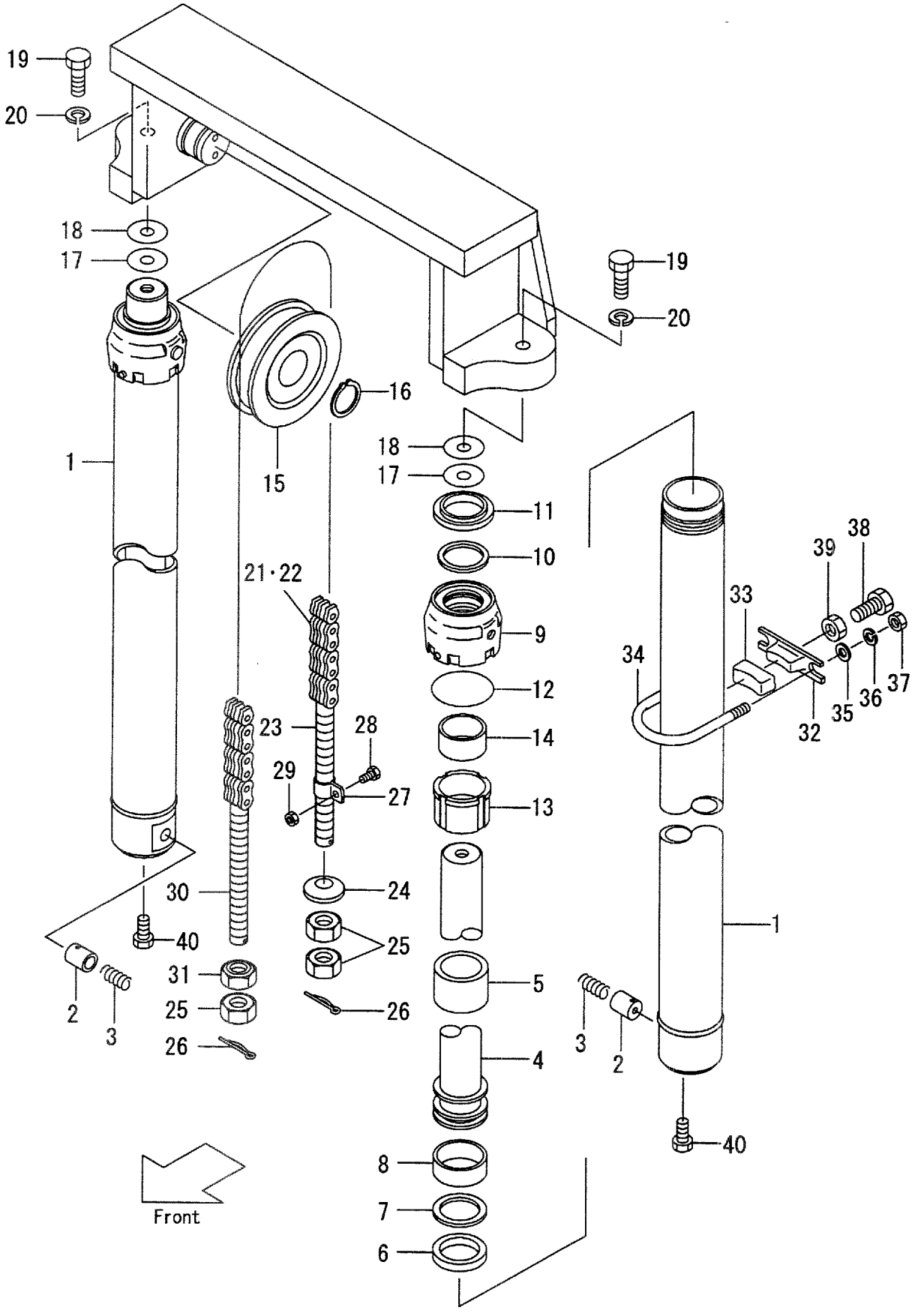

A:VM24T(FD35,40,FG35,40)

Item No	Part No.	Mark	Description		Req'd	Remarks : Serial No.
-	214A8-42631		RUBBER	ﾗﾊﾞｰ	4	(VM600)
34	224T8-42701		U-BOLT	Uﾎﾞﾙﾄ	2	(VM250-550)
-	224T8-42701		U-BOLT	Uﾎﾞﾙﾄ	4	(VM600)
35	02000-00010		WASHER	ﾜｯｼｬ	4	(VM250-550)
-	02000-00010		WASHER	ﾜｯｼｬ	8	(VM600)
36	02010-00010		WASHER	ﾜｯｼｬ	4	(VM250-550)
-	02010-00010		WASHER	ﾜｯｼｬ	8	(VM600)
37	01400-00010		NUT	ﾅｯﾄ	4	(VM250-550)
-	01400-00010		NUT	ﾅｯﾄ	8	(VM600)
38	01120-16040		BOLT	ﾎﾞﾙﾄ	2	(VM250-550)
-	01120-16040		BOLT	ﾎﾞﾙﾄ	4	(VM600)
39	01402-00016		NUT	ﾅｯﾄ	2	(VM250-550)
-	01402-00016		NUT	ﾅｯﾄ	4	(VM600)
40	214A0-82831		BOLT	ﾎﾞﾙﾄ	2	
K1	224T8-49803		KIT,OVERHAUL	ｵｰﾊﾞｰﾎｰﾙｷｯﾄ	2	INC.6-8,10-12

FIG.156 MAST PIPING [VM24T]

(M4048460) マストパイピング

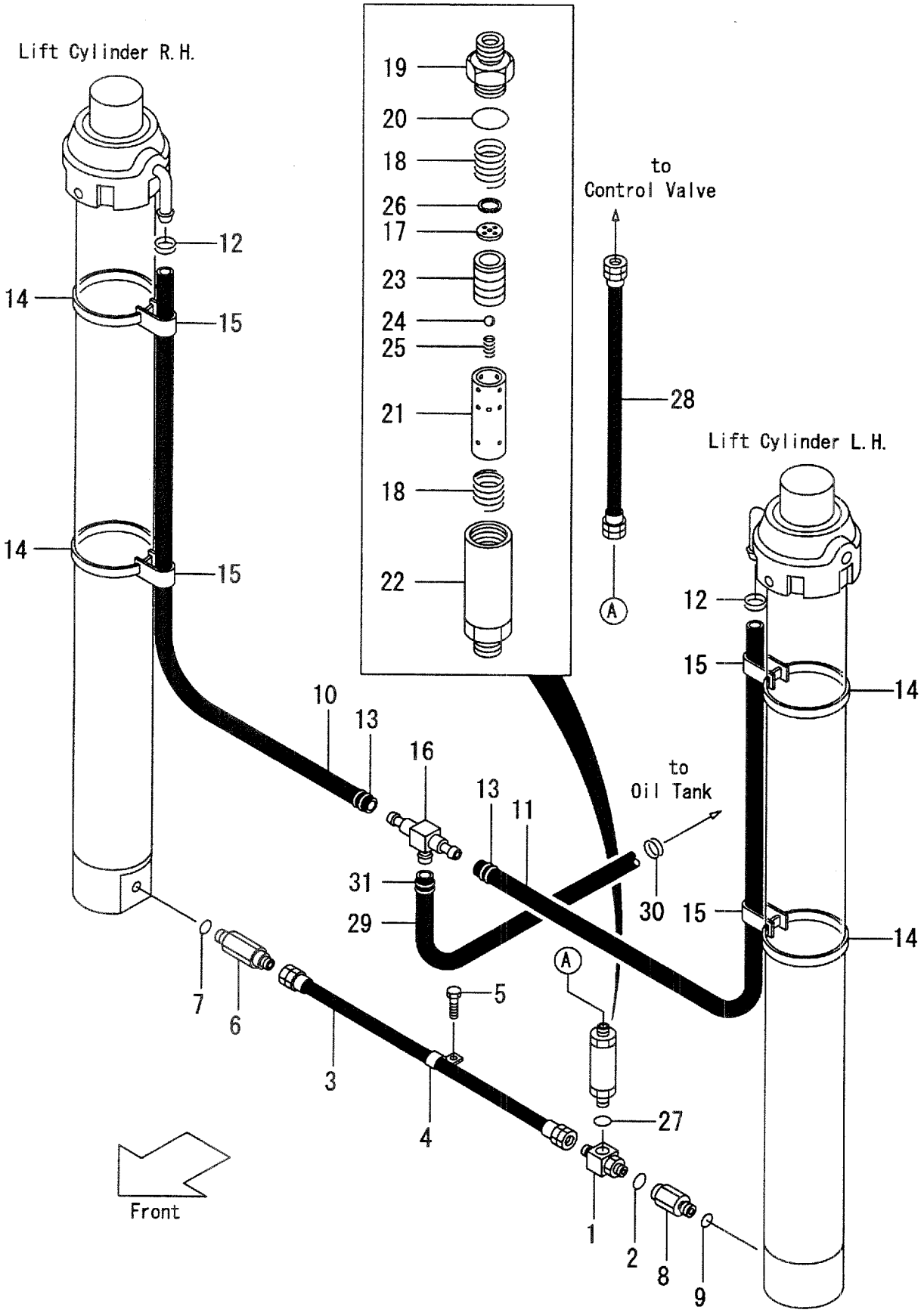

A:VM24T(FD35,40,FG35,40)

Item No	Part No.	Mark	Description		Req'd	Remarks : Serial No.
A1	24609-43682		THREE-WAY-ASSY	ｽﾘｰｳｪｲｱｯｾﾝ	1	INC.1,2
1	NO PART NO.	#	THREE-WAY	ｽﾘｰｳｴｲ	1	
2	03320-00180		O-RING	Oﾘﾝｸﾞ	1	
3	224T8-42861		HOSE,HP	ﾎｰｽ	1	
4	214A8-43081		CLIP	ｸﾘｯﾌﾟ	1	
5	01184-10020		BOLT	ﾎﾞﾙﾄ	1	
A2	224T8-44001		NIPPLE-ASSY	ﾆｯﾌﾟﾙｱｯｾﾝ	1	INC.6,7
6	NO PART NO.	#	NIPPLE	ﾆｯﾌﾟﾙ	1	
7	03320-00240		O-RING	Oﾘﾝｸﾞ	1	
A3	224T8-44021		NIPPLE-ASSY	ﾆｯﾌﾟﾙｱｯｾﾝ	1	INC.8,9
8	NO PART NO.	#	NIPPLE	ﾆｯﾌﾟﾙ	1	
9	03320-00240		O-RING	Oﾘﾝｸﾞ	1	
10	24328-40080		HOSE,RH VM250	ﾎｰｽ	1	
-	24328-40090		HOSE,RH VM270	ﾎｰｽ	1	
-	24328-40095		HOSE,RH VM275	ﾎｰｽ	1	
-	24328-40105		HOSE,RH VM300	ﾎｰｽ	1	
-	24328-40120		HOSE,RH VM325	ﾎｰｽ	1	
-	24328-40120		HOSE,RH VM330	ﾎｰｽ	1	
-	24328-40130		HOSE,RH VM350	ﾎｰｽ	1	
-	24328-40140		HOSE,RH VM366	ﾎｰｽ	1	
-	24328-40140		HOSE,RH VM370	ﾎｰｽ	1	
-	24328-40145		HOSE,RH VM375	ﾎｰｽ	1	
-	24328-40160		HOSE,RH VM400	ﾎｰｽ	1	
-	24328-40175		HOSE,RH VM425	ﾎｰｽ	1	
-	24328-40185		HOSE,RH VM450	ﾎｰｽ	1	
-	24328-40200		HOSE,RH VM475	ﾎｰｽ	1	
-	24328-40210		HOSE,RH VM500	ﾎｰｽ	1	
-	24328-40240		HOSE,RH VM550	ﾎｰｽ	1	
-	24328-40265		HOSE,RH VM600	ﾎｰｽ	1	
11	24328-40130		HOSE,LH VM250	ﾎｰｽ	1	
-	24328-40140		HOSE,LH VM270	ﾎｰｽ	1	
-	24328-40145		HOSE,LH VM275	ﾎｰｽ	1	
-	24328-40155		HOSE,LH VM300	ﾎｰｽ	1	
-	24328-40170		HOSE,LH VM325	ﾎｰｽ	1	
-	24328-40170		HOSE,LH VM330	ﾎｰｽ	1	
-	24328-40180		HOSE,LH VM350	ﾎｰｽ	1	
-	24328-40190		HOSE,LH VM366	ﾎｰｽ	1	
-	24328-40190		HOSE,LH VM370	ﾎｰｽ	1	
-	24328-40195		HOSE,LH VM375	ﾎｰｽ	1	
-	24328-40210		HOSE,LH VM400	ﾎｰｽ	1	
-	24328-40225		HOSE,LH VM425	ﾎｰｽ	1	
-	24328-40235		HOSE,LH VM450	ﾎｰｽ	1	
-	24328-40250		HOSE,LH VM475	ﾎｰｽ	1	
-	24328-40260		HOSE,LH VM500	ﾎｰｽ	1	
-	24328-40290		HOSE,LH VM550	ﾎｰｽ	1	
-	24328-40315		HOSE,LH VM600	ﾎｰｽ	1	
12	04911-00022		CLIP	ｸﾘｯﾌﾟ	2	
13	24329-46201		CLIP	ｸﾘｯﾌﾟ	2	
14	23678-42411		BAND	ﾊﾞﾝﾄﾞ	4	
15	53675-54101		BAND	ﾊﾞﾝﾄﾞ	4	

FIG.156 MAST PIPING [VM24T]

(M4048460) マストパイピング

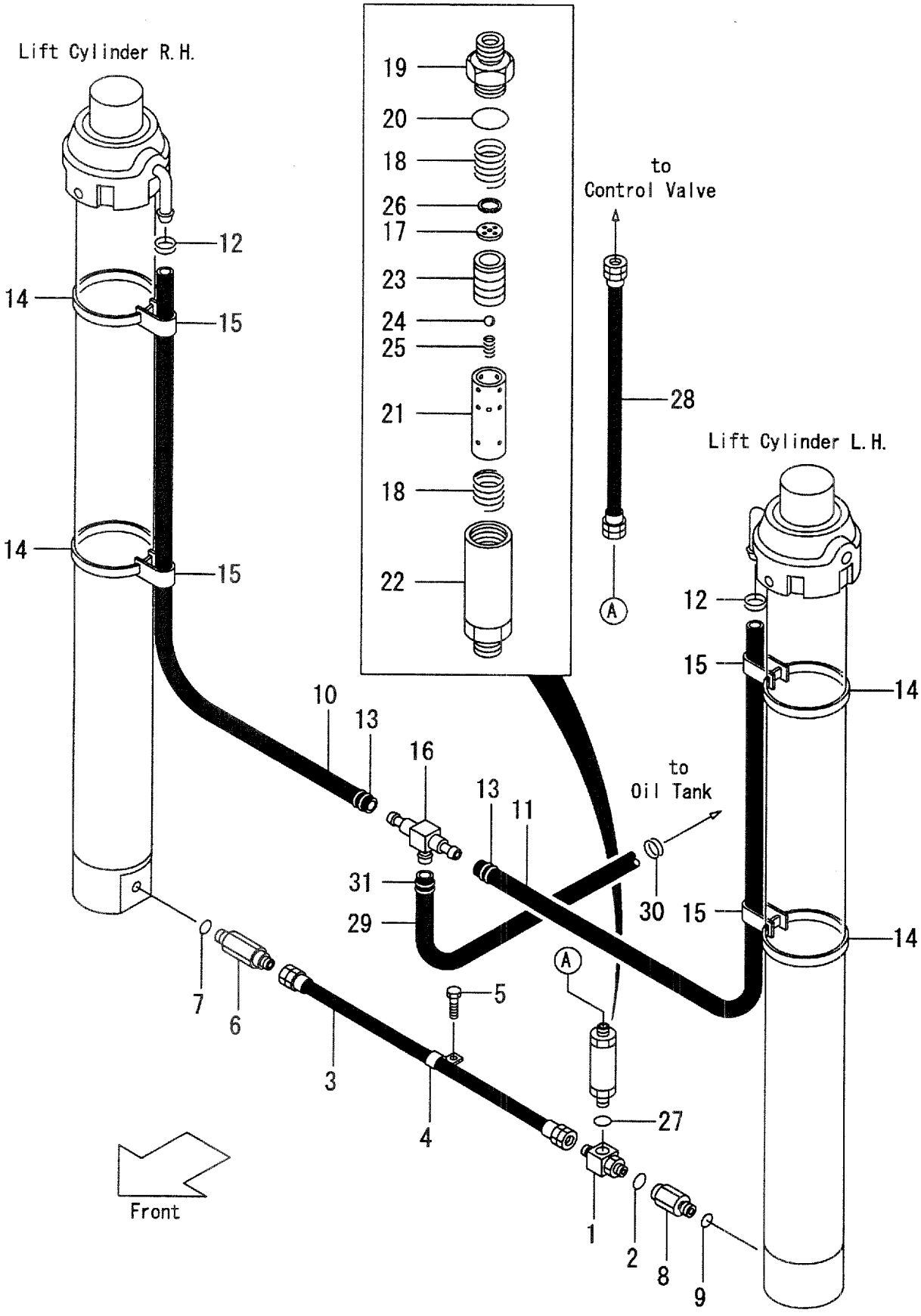

A:VM24T(FD35,40,FG35,40)

Item No	Part No.	Mark	Description		Req'd	Remarks : Serial No.
16	24329-46052		THREE-WAY	ｽﾘｰｳｴｲ	1	
A4	224T8-41002		REGULATOR-ASSY,FLOW	ﾚｷﾞｭﾚｰﾀｱｯｾﾝ	1	INC.17-26
17	NO PART NO.	#	PLATE,ORIFICE	ﾌﾟﾚｰﾄ	1	
18	24609-43631		SPRING	ｽﾌﾟﾘﾝｸﾞ	2	
19	NO PART NO.	#	NIPPLE	ﾆｯﾌﾟﾙ	1	
20	03300-00360		O-RING	Oﾘﾝｸﾞ	1	(OLD PART)
-	03320-00360		O-RING	Oﾘﾝｸﾞ	1	(NEW PART)
21	NO PART NO.	#	SLEEVE	ｽﾘｰﾌﾞ	1	
22	NO PART NO.	#	CASE	ｹｰｽ	1	
23	NO PART NO.	#	PISTON	ﾋﾟｽﾄﾝ	1	
24	24459-42951		BALL	ﾎﾞｰﾙ	1	
25	214A8-44151		SPRING	ｽﾌﾟﾘﾝｸﾞ	1	
26	02110-00020		RING,SNAP	ｽﾅｯﾌﾟﾘﾝｸﾞ	1	
27	03320-00240		O-RING	Oﾘﾝｸﾞ	1	
28	224T8-02101		HOSE,HP	ﾎｰｽ	1	
29	04710-06113		HOSE,LP	ﾎｰｽ	1	
30	04911-00032		CLIP	ｸﾘｯﾌﾟ	1	
31	24329-46211		CLIP	ｸﾘｯﾌﾟ	1	

FIG.157 FORK & LIFT BRACKET [VM24U](FREE LIFT TYPE)

(M4048220) フォーク&リフトブラケット

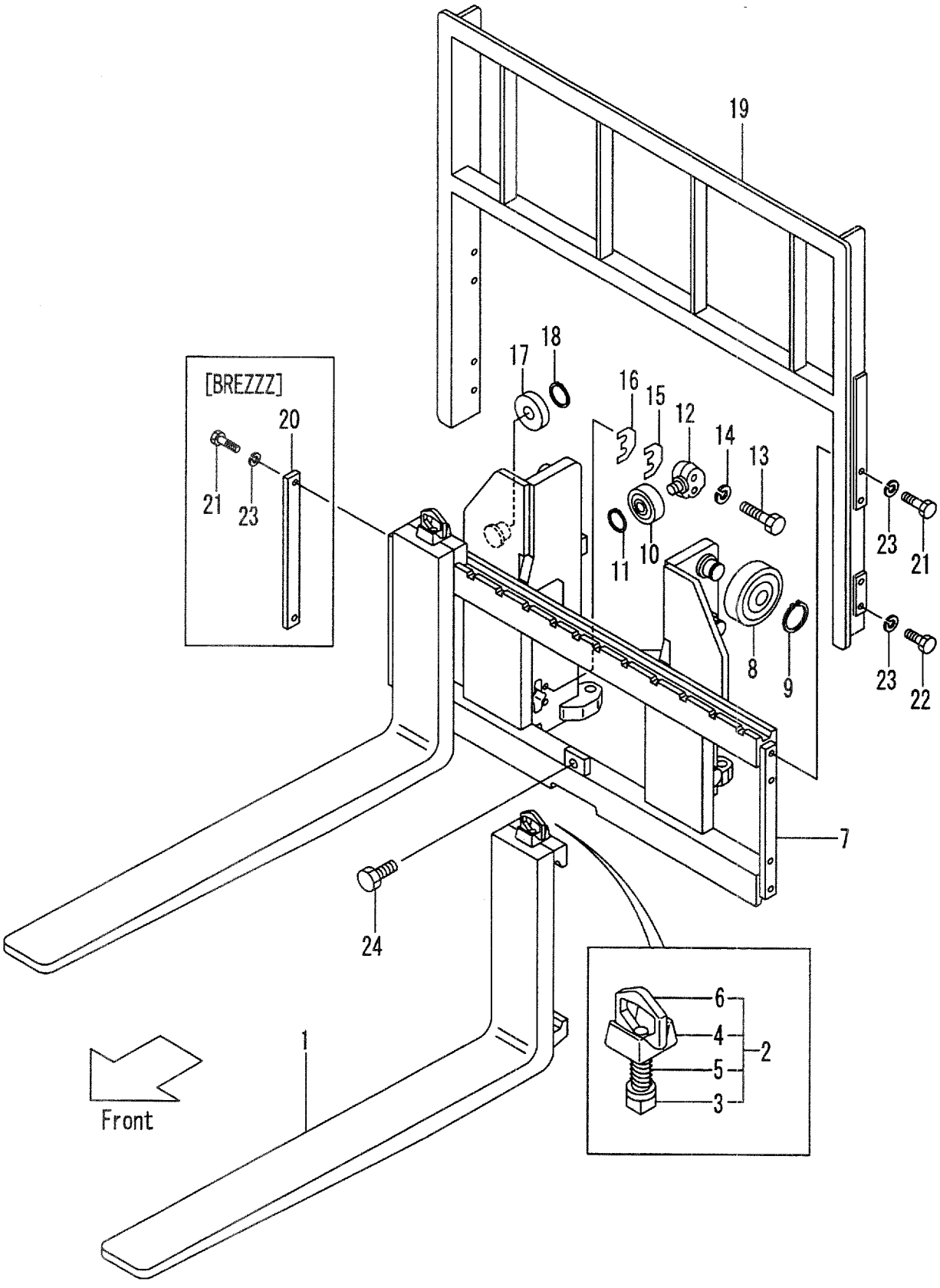

A:VM24U(FD35,40,FG35,40)

Item No	Part No.	Mark	Description		Req'd	Remarks : Serial No.
1	24328-10513		FORK	ﾌｫｰｸ	2	MAST NO.1-58 (L=1070) INC.3-6
-	24328-10514		FORK	ﾌｫｰｸ	2	MAST NO.59- (L=1070) INC.3-6
-	24328-10503		FORK	ﾌｫｰｸ	2	[LF100] INC.3-6
-	24328-10513		FORK	ﾌｫｰｸ	2	MAST NO.1-58 [LF107] INC.3-6
-	24328-10514		FORK	ﾌｫｰｸ	2	MAST NO.59- [LF107] INC.3-6
-	24328-10523		FORK	ﾌｫｰｸ	2	[LF110] INC.3-6
-	24328-10533		FORK	ﾌｫｰｸ	2	[LF120] INC.3-6
-	24328-10543		FORK	ﾌｫｰｸ	2	MAST NO.1-58 [LF122] INC.3-6
-	24328-10544		FORK	ﾌｫｰｸ	2	MAST NO.59- [LF122] INC.3-6
-	24328-12303		FORK	ﾌｫｰｸ	2	MAST NO.1-59 [LF130] INC.3-6
-	24328-12304		FORK	ﾌｫｰｸ	2	MAST NO.60- [LF130] INC.3-6
-	24328-10553		FORK	ﾌｫｰｸ	2	MAST NO.1-59 [LF137] INC.3-6
-	24328-10554		FORK	ﾌｫｰｸ	2	MAST NO.60- [LF137] INC.3-6
-	24328-12313		FORK	ﾌｫｰｸ	2	MAST NO.1-59 [LF140] INC.3-6
-	24328-12314		FORK	ﾌｫｰｸ	2	MAST NO.60- [LF140] INC.3-6
-	24328-12323		FORK	ﾌｫｰｸ	2	MAST NO.1-59 [LF150] INC.3-6
-	24328-12324		FORK	ﾌｫｰｸ	2	MAST NO.60- [LF150] INC.3-6
-	24328-10563		FORK	ﾌｫｰｸ	2	MAST NO.1-59 [LF152] INC.3-6
-	24328-10564		FORK	ﾌｫｰｸ	2	MAST NO.60- [LF152] INC.3-6
-	24328-12333		FORK	ﾌｫｰｸ	2	MAST NO.1-59 [LF160] INC.3-6
-	24328-12334		FORK	ﾌｫｰｸ	2	MAST NO.60- [LF160] INC.3-6
-	24328-10573		FORK	ﾌｫｰｸ	2	MAST NO.1-59 [LF167] INC.3-6
-	24328-10574		FORK	ﾌｫｰｸ	2	MAST NO.60- [LF167] INC.3-6
-	24328-12343		FORK	ﾌｫｰｸ	2	MAST NO.1-59 [LF170] INC.3-6
-	24328-12344		FORK	ﾌｫｰｸ	2	MAST NO.60- [LF170] INC.3-6
-	24328-12353		FORK	ﾌｫｰｸ	2	MAST NO.1-59 [LF180] INC.3-6

FIG.157 FORK & LIFT BRACKET [VM24U](FREE LIFT TYPE)

(M4048220) フォーク&リフトブラケット

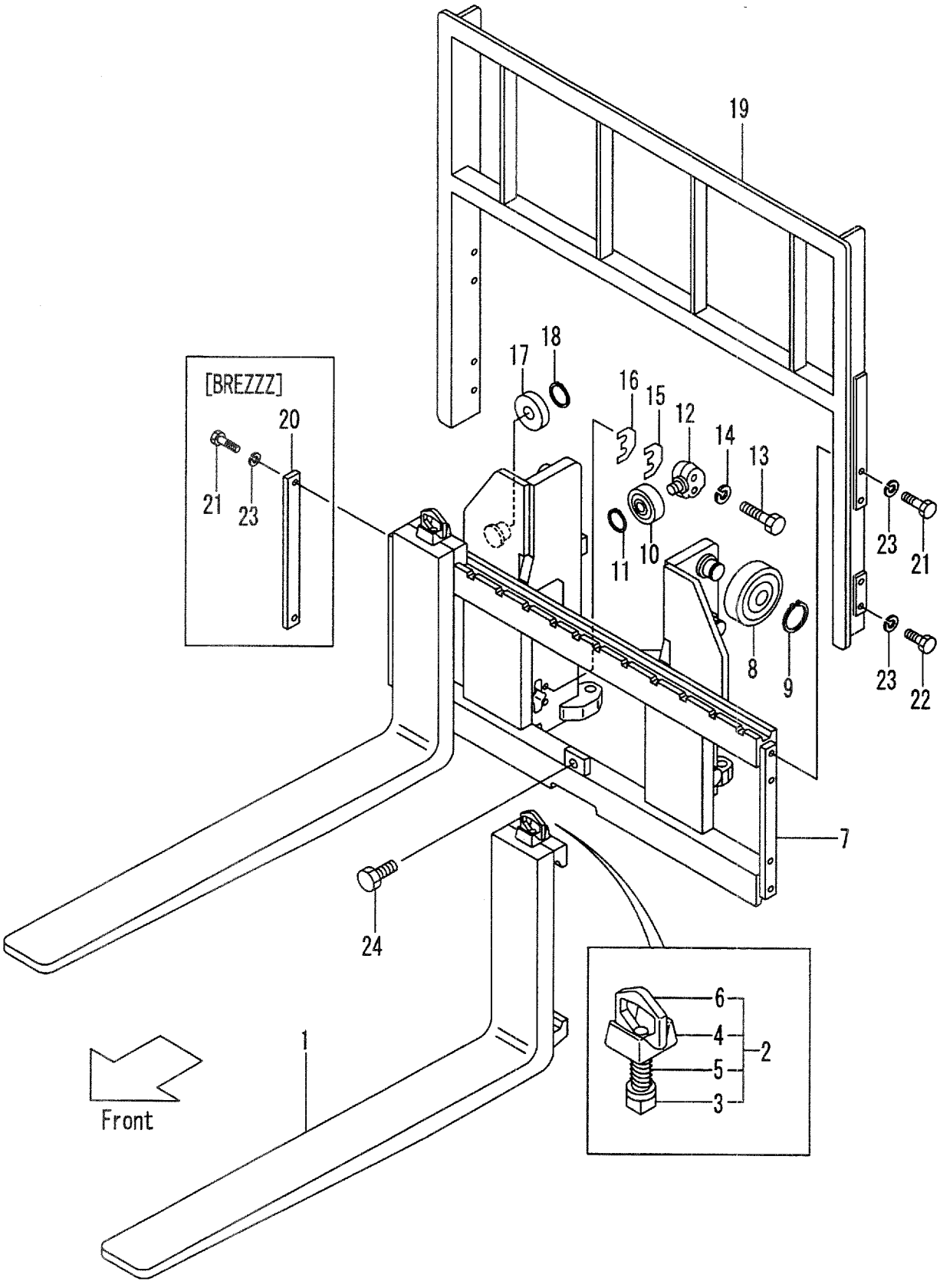

A:VM24U(FD35,40,FG35,40)

Item No	Part No.	Mark	Description		Req'd	Remarks : Serial No.
-	24328-12354		FORK	ﾌｫｰｸ	2	MAST NO.60- [LF180] INC.3-6
-	24328-10583		FORK	ﾌｫｰｸ	2	MAST NO.1-59 [LF182] INC.3-6
-	24328-10584		FORK	ﾌｫｰｸ	2	MAST NO.60- [LF182] INC.3-6
-	24328-12363		FORK	ﾌｫｰｸ	2	MAST NO.1-59 [LF190] INC.3-6
-	24328-12364		FORK	ﾌｫｰｸ	2	MAST NO.60- [LF190] INC.3-6
-	24328-10593		FORK	ﾌｫｰｸ	2	MAST NO.1-59 [LF197] INC.3-6
-	24328-10594		FORK	ﾌｫｰｸ	2	MAST NO.60- [LF197] INC.3-6
-	24328-12373		FORK	ﾌｫｰｸ	2	MAST NO.1-59 [LF200] INC.3-6
-	24328-12374		FORK	ﾌｫｰｸ	2	MAST NO.60- [LF200] INC.3-6
-	24328-12383		FORK	ﾌｫｰｸ	2	MAST NO.1-59 [LF210] INC.3-6
-	24328-12384		FORK	ﾌｫｰｸ	2	MAST NO.60- [LF210] INC.3-6
-	24328-10603		FORK	ﾌｫｰｸ	2	MAST NO.1-59 [LF212] INC.3-6
-	24328-10604		FORK	ﾌｫｰｸ	2	MAST NO.60- [LF212] INC.3-6
-	24328-10613		FORK	ﾌｫｰｸ	2	MAST NO.1-75 [LF220] INC.3-6
-	24328-10614		FORK	ﾌｫｰｸ	2	MAST NO.76- [LF220] INC.3-6
-	24328-10623		FORK	ﾌｫｰｸ	2	MAST NO.1-75 [LF227] INC.3-6
-	24328-10624		FORK	ﾌｫｰｸ	2	MAST NO.76- [LF227] INC.3-6
-	24328-12393		FORK	ﾌｫｰｸ	2	MAST NO.1-75 [LF230] INC.3-6
-	24328-12394		FORK	ﾌｫｰｸ	2	MAST NO.76- [LF230] INC.3-6
2	214J8-11001		STOPPER,FORK	ｽﾄｯﾊﾟ	2	MAST NO.1-95 INC.3-6
-	214J8-11002		STOPPER,FORK	ｽﾄｯﾊﾟ	2	MAST NO.96-
3	NO PART NO.	#	STOPPER	ｽﾄｯﾊﾟ	2	MAST NO.1-95
4	214J8-12001		HEAD	ﾍｯﾄﾞ	2	MAST NO.1-95
5	214J8-12031		SPRING	ｽﾌﾟﾘﾝｸﾞ	2	MAST NO.1-95
6	214A8-12021		HANDLE	ﾊﾝﾄﾞﾙ	2	MAST NO.1-95
7	224T8-20001		BRACKET,LIFT	ﾌﾞﾗｹｯﾄ	1	
-	224T8-21001		BRACKET,LIFT	ﾌﾞﾗｹｯﾄ	1	[LBR002]
-	524T1-62001		BRACKET,LIFT	ﾌﾞﾗｹｯﾄ	1	[WF150][WF168][WF183] [WF200]

FIG.157 FORK & LIFT BRACKET [VM24U](FREE LIFT TYPE)

(M4048220) フォーク&リフトブラケット

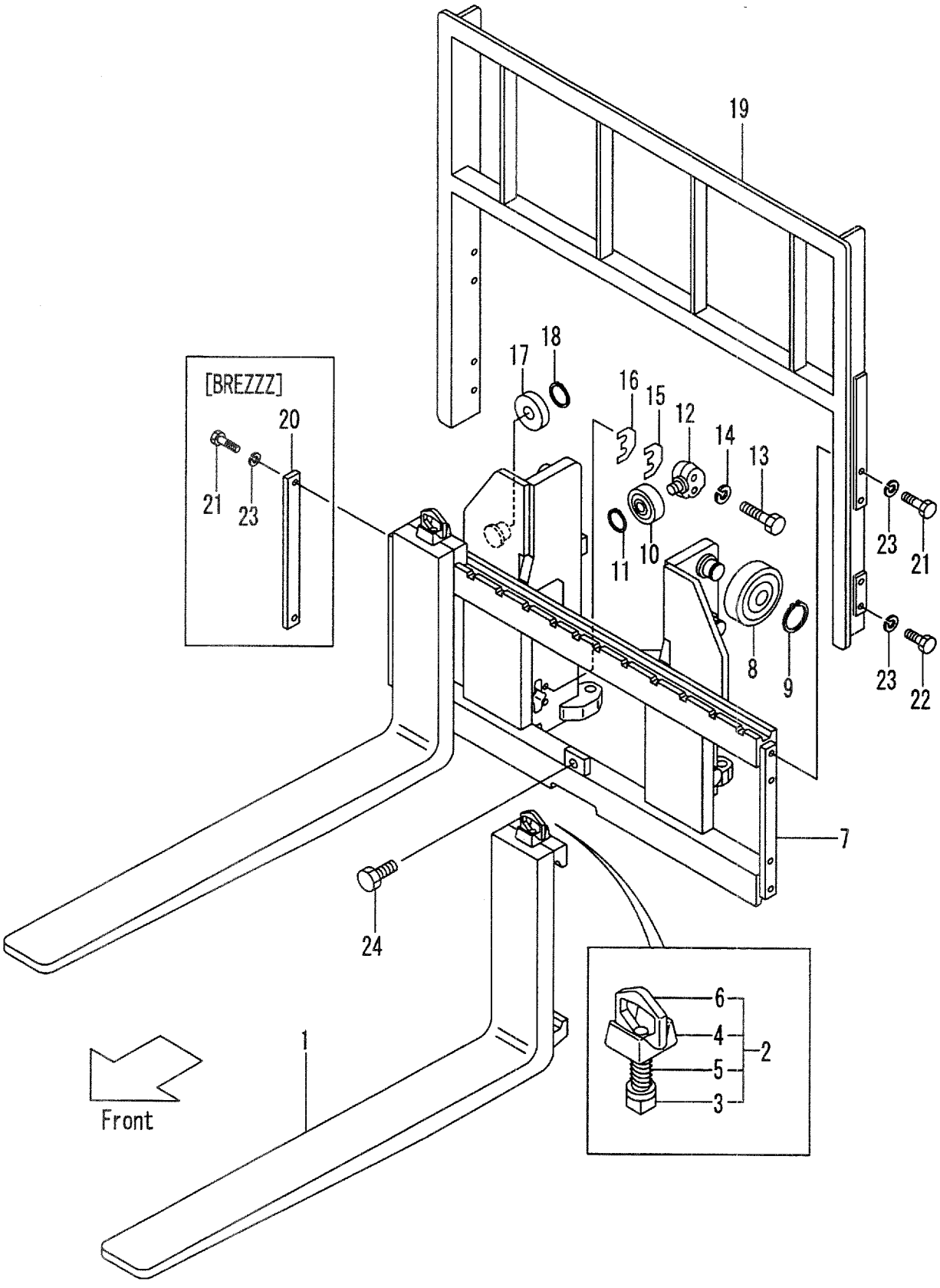

A:VM24U(FD35,40,FG35,40)

Item No	Part No.	Mark	Description		Req'd	Remarks : Serial No.
-	524T1-62011		BRACKET,LIFT	ﾌﾞﾗｹｯﾄ	1	[WF180][WF240]
-	524T1-62051		BRACKET,LIFT	ﾌﾞﾗｹｯﾄ	1	[LBR002/WF168]
-	524T7-32001		BRACKET,LIFT	ﾌﾞﾗｹｯﾄ	1	[TRB][TRV][TC]
-	524T7-32011		BRACKET,LIFT	ﾌﾞﾗｹｯﾄ	1	[TC/WF168]
-	524T7-32021		BRACKET,LIFT	ﾌﾞﾗｹｯﾄ	1	[TC/WF180]
8	23818-20701		ROLLER,END,143.5	ﾛｰﾗ	6	
-	23958-22081		ROLLER,END,144.0	ﾛｰﾗ	(6)	
9	02100-00050		RING,SNAP	ｽﾅｯﾌﾟﾘﾝｸﾞ	6	
A1	NO PART NO.	#	ROLLER-ASSY,SIDE	ｻｲﾄﾞﾛｰﾗｱｯｾﾝ	2	INC.10-12
10	22198-22341		ROLLER,END,91.5	ﾛｰﾗ	2	
11	02100-00030		RING,SNAP	ｽﾅｯﾌﾟﾘﾝｸﾞ	2	
12	24609-42131		SHAFT	ｼｬﾌﾄ	2	
13	01103-16065		BOLT	ﾎﾞﾙﾄ	4	
14	02011-00016		WASHER	ﾜｯｼｬ	4	
15	24609-42151		SHIM,T-1.0	ｼﾑ	8	
16	24609-42161		SHIM,T-0.2	ｼﾑ	8	
17	22198-22341		ROLLER,END,91.5	ﾛｰﾗ	2	
-	22198-22341		ROLLER,END,91.5	ﾛｰﾗ	2	[WF150][WF168][WF183] [WF200][LBR002/WF168]
-	22198-22341		ROLLER,END,91.5	ﾛｰﾗ	2	[TRB][TRV][TC][TC/WF168]
-	22198-22341		ROLLER,END,91.5	ﾛｰﾗ	4	[LBR002][WF180][WF240] [TC/WF180]
-	24258-33401		ROLLER,END,92.0	ﾛｰﾗ	(2)	
-	24258-33401		ROLLER,END,92.0	ﾛｰﾗ	(2)	[WF150][WF168][WF183] [WF200][LBR002/WF168]
-	24258-33401		ROLLER,END,92.0	ﾛｰﾗ	(2)	[TRB][TRV][TC][TC/WF168]
-	24258-33401		ROLLER,END,92.0	ﾛｰﾗ	(4)	[LBR002][WF180][WF240] [TC/WF180]
18	02100-00030		RING,SNAP	ｽﾅｯﾌﾟﾘﾝｸﾞ	2	
-	02100-00030		RING,SNAP	ｽﾅｯﾌﾟﾘﾝｸﾞ	2	[WF150][WF168][WF183] [WF200][LBR002/WF168]
-	02100-00030		RING,SNAP	ｽﾅｯﾌﾟﾘﾝｸﾞ	2	[TRB][TRV][TC][TC/WF168]
-	02100-00030		RING,SNAP	ｽﾅｯﾌﾟﾘﾝｸﾞ	4	[LBR002][WF180][WF240] [TC/WF180]
19	224T8-22301		BACKREST	ﾊﾞｯｸﾚｽﾄ	1	
-	524T2-74001		BACKREST	ﾊﾞｯｸﾚｽﾄ	1	[EXA][EXC]
-	524T1-64301		BACKREST	ﾊﾞｯｸﾚｽﾄ	1	[WF168][WBR]
-	524T1-64311		BACKREST	ﾊﾞｯｸﾚｽﾄ	1	[WF180][WWB]
-	224T8-22601		BACKREST,H-1300	ﾊﾞｯｸﾚｽﾄ	1	[HBR]
-	224T8-22611		BACKREST,H-1400	ﾊﾞｯｸﾚｽﾄ	1	[HBR]
-	224T8-22621		BACKREST,H-1500	ﾊﾞｯｸﾚｽﾄ	1	[HBR]
-	224T8-22631		BACKREST,H-1600	ﾊﾞｯｸﾚｽﾄ	1	[HBR]
20	24450-92021		PLATE	ﾌﾟﾚｰﾄ	2	[BREZZZ]
21	01100-14030		BOLT	ﾎﾞﾙﾄ	4	
22	01100-14025		BOLT	ﾎﾞﾙﾄ	4	
23	02010-00014		WASHER	ﾜｯｼｬ	8	
-	02010-00014		WASHER	ﾜｯｼｬ	4	[BREZZZ]
24	01184-12025		BOLT	ﾎﾞﾙﾄ	1	

FIG.158 MAST [VM24U](FREE LIFT TYPE)

(M4048320) マスト

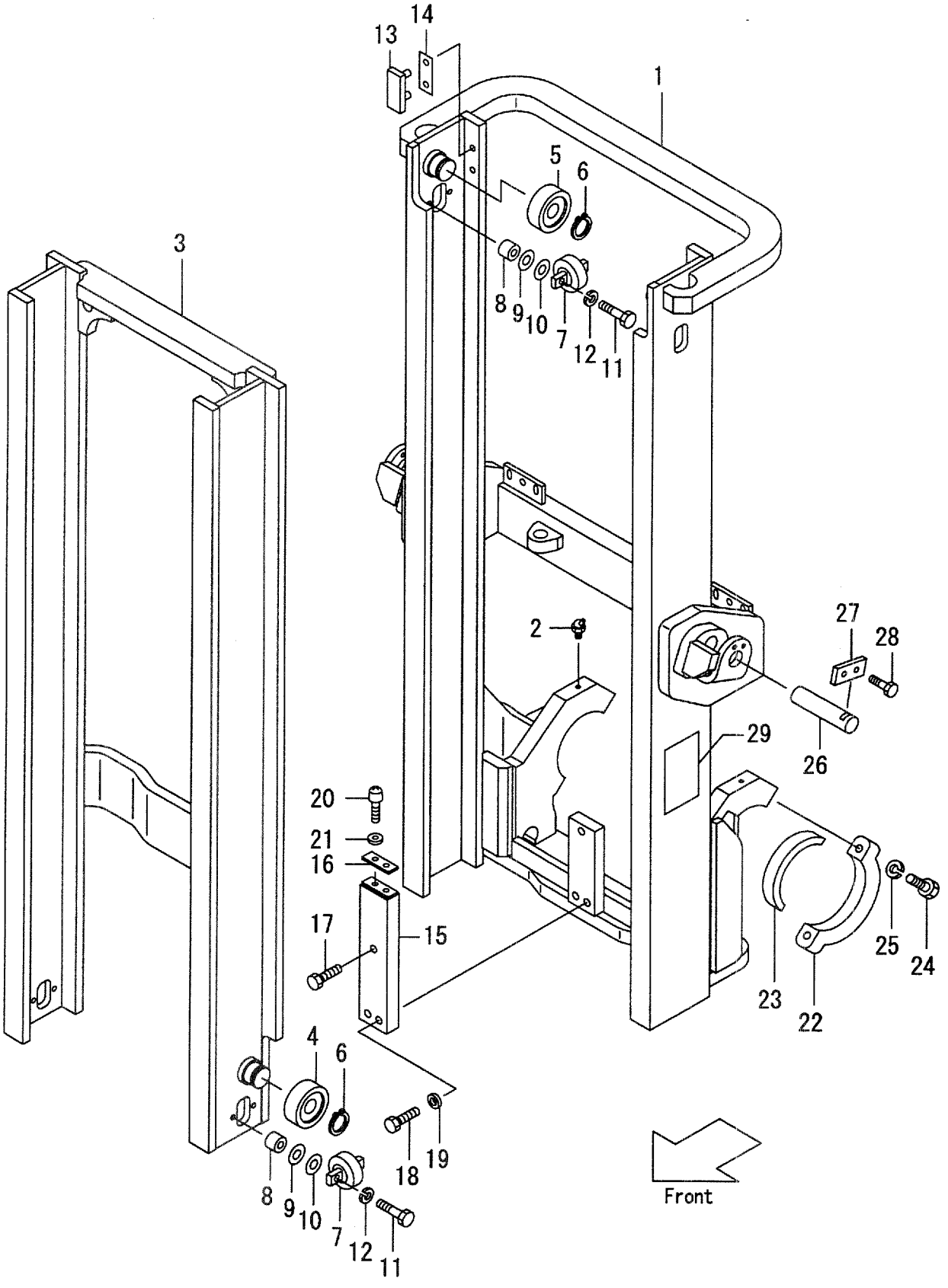

A:VM24U(FD35,40,FG35,40)

Item No	Part No.	Mark	Description		Req'd	Remarks : Serial No.
1	224U8-30011		MAST,OUTER VM250	アウタマスト	1	MAST NO.1-104
-	224U8-30012		MAST,OUTER VM250	アウタマスト	1	MAST NO.105-
-	224U8-30021		MAST,OUTER VM270	アウタマスト	1	MAST NO.1-104
-	224U8-30022		MAST,OUTER VM270	アウタマスト	1	MAST NO.105-
-	224U8-30031		MAST,OUTER VM275	アウタマスト	1	MAST NO.1-104
-	224U8-30032		MAST,OUTER VM275	アウタマスト	1	MAST NO.105-
-	224U8-30001		MAST,OUTER VM300	アウタマスト	1	MAST NO.1-104
-	224U8-30002		MAST,OUTER VM300	アウタマスト	1	MAST NO.105-
-	224U8-30041		MAST,OUTER VM325	アウタマスト	1	MAST NO.1-104
-	224U8-30042		MAST,OUTER VM325	アウタマスト	1	MAST NO.105-
-	224U8-30051		MAST,OUTER VM330	アウタマスト	1	MAST NO.1-104
-	224U8-30052		MAST,OUTER VM330	アウタマスト	1	MAST NO.105-
-	224U8-30061		MAST,OUTER VM350	アウタマスト	1	MAST NO.1-104
-	224U8-30062		MAST,OUTER VM350	アウタマスト	1	MAST NO.105-
-	224U8-30071		MAST,OUTER VM366	アウタマスト	1	MAST NO.1-104
-	224U8-30072		MAST,OUTER VM366	アウタマスト	1	MAST NO.105-
-	224U8-30081		MAST,OUTER VM370	アウタマスト	1	MAST NO.1-104
-	224U8-30082		MAST,OUTER VM370	アウタマスト	1	MAST NO.105-
-	224U8-30091		MAST,OUTER VM375	アウタマスト	1	MAST NO.1-104
-	224U8-30092		MAST,OUTER VM375	アウタマスト	1	MAST NO.105-
-	224U8-30101		MAST,OUTER VM400	アウタマスト	1	MAST NO.1-104
-	224U8-30102		MAST,OUTER VM400	アウタマスト	1	MAST NO.105-
-	224U8-30111		MAST,OUTER VM425	アウタマスト	1	MAST NO.1-104
-	224U8-30112		MAST,OUTER VM425	アウタマスト	1	MAST NO.105-
-	224U8-30121		MAST,OUTER VM450	アウタマスト	1	MAST NO.1-104
-	224U8-30122		MAST,OUTER VM450	アウタマスト	1	MAST NO.105-
-	224U8-30131		MAST,OUTER VM475	アウタマスト	1	MAST NO.1-104
-	224U8-30132		MAST,OUTER VM475	アウタマスト	1	MAST NO.105-
-	224U8-30141		MAST,OUTER VM500	アウタマスト	1	MAST NO.1-104
-	224U8-30142		MAST,OUTER VM500	アウタマスト	1	MAST NO.105-
-	224U8-30151		MAST,OUTER VM550	アウタマスト	1	MAST NO.1-104
-	224U8-30152		MAST,OUTER VM550	アウタマスト	1	MAST NO.105-
-	224U8-30161		MAST,OUTER VM600	アウタマスト	1	MAST NO.1-104
-	224U8-30162		MAST,OUTER VM600	アウタマスト	1	MAST NO.105-
2	04901-00160		FITTING	フィッティング	2	
3	224U8-30211		MAST,INNER VM250	インナマスト	1	
-	224U8-30221		MAST,INNER VM270	インナマスト	1	
-	224U8-30231		MAST,INNER VM275	インナマスト	1	
-	224U8-30201		MAST,INNER VM300	インナマスト	1	
-	224U8-30241		MAST,INNER VM325	インナマスト	1	
-	224U8-30251		MAST,INNER VM330	インナマスト	1	
-	224U8-30261		MAST,INNER VM350	インナマスト	1	
-	224U8-30271		MAST,INNER VM366	インナマスト	1	
-	224U8-30281		MAST,INNER VM370	インナマスト	1	
-	224U8-30291		MAST,INNER VM375	インナマスト	1	
-	224U8-30301		MAST,INNER VM400	インナマスト	1	
-	224U8-30311		MAST,INNER VM425	インナマスト	1	
-	224U8-30321		MAST,INNER VM450	インナマスト	1	
-	224U8-30331		MAST,INNER VM475	インナマスト	1	
-	224U8-30341		MAST,INNER VM500	インナマスト	1	

FIG.158 MAST [VM24U](FREE LIFT TYPE)

(M4048320) マスト

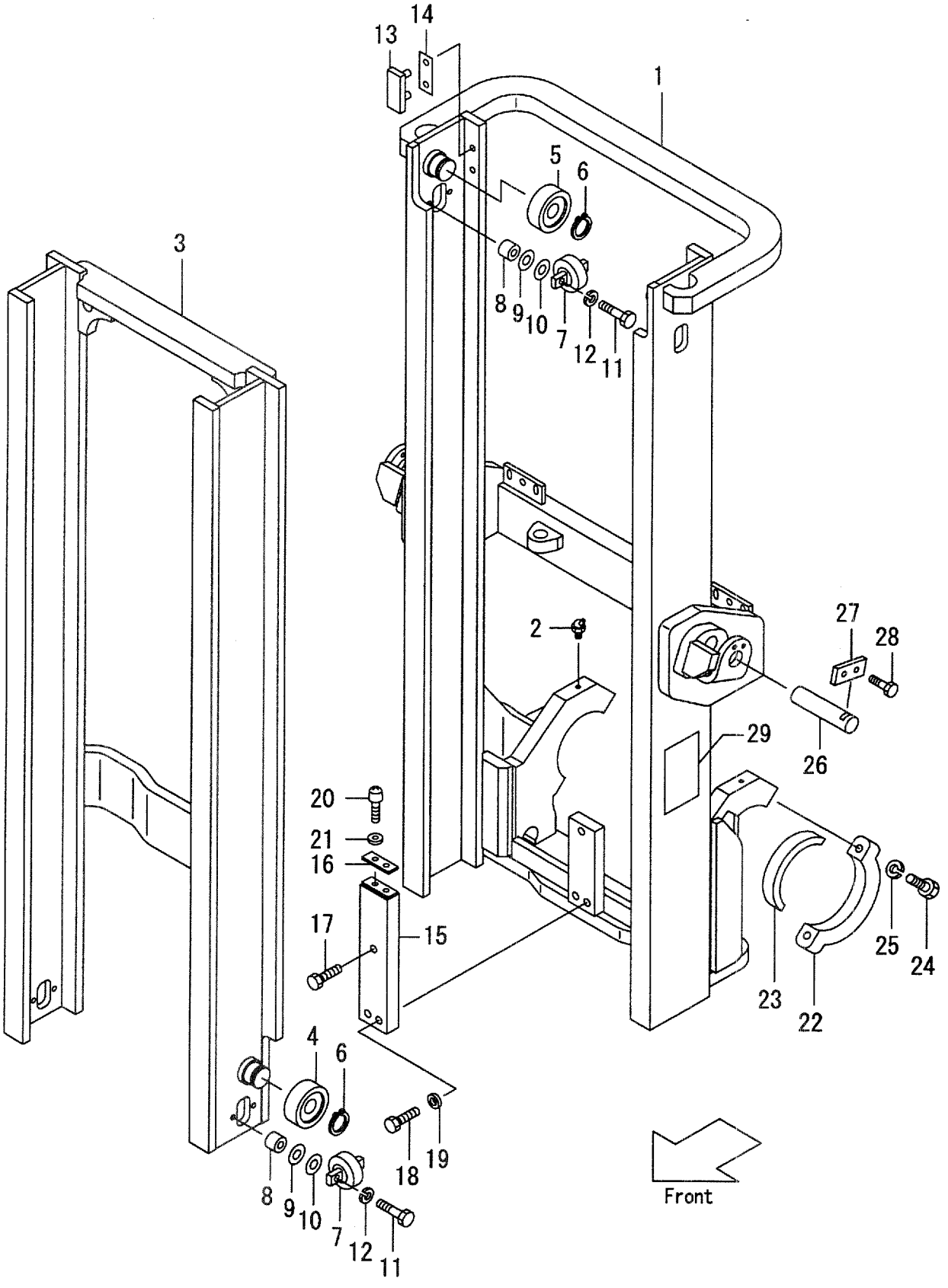

A:VM24U(FD35,40,FG35,40)

Item No	Part No.	Mark	Description		Req'd	Remarks : Serial No.
-	224U8-30351		MAST,INNER VM550	ｲﾝﾅﾏｽﾄ	1	
-	224U8-30361		MAST,INNER VM600	ｲﾝﾅﾏｽﾄ	1	
4	23818-20701		ROLLER,END,143.5	ﾛｰﾗ	2	
-	23958-22081		ROLLER,END,144.0	ﾛｰﾗ	(2)	
5	23818-20701		ROLLER,END,143.5	ﾛｰﾗ	2	
6	02100-00050		RING,SNAP	ｽﾅｯﾌﾟﾘﾝｸﾞ	4	
7	23818-30301		ROLLER,SIDE	ﾛｰﾗ	4	
8	23818-30071		SPACER	ｽﾍﾟｰｻ	8	
9	22548-34051		SHIM,T-0.5	ｼﾑ	16	
10	22548-34061		SHIM,T-1.0	ｼﾑ	8	
11	01100-12045		BOLT	ﾎﾞﾙﾄ	8	
12	02010-00012		WASHER	ﾜｯｼｬ	8	
13	22678-32001		SLIPPER,T-4	ｽﾘｯﾊﾟ	2	
14	22679-43231		SHIM,T-0.5	ｼﾑ	4	
15	224U8-32001		BRACKET	ﾌﾞﾗｹｯﾄ	1	
16	27419-43321		STOPPER	ｽﾄｯﾊﾟ	1	
17	01103-16030		BOLT	ﾎﾞﾙﾄ	1	
18	01103-16040		BOLT	ﾎﾞﾙﾄ	2	
19	02011-00016		WASHER	ﾜｯｼｬ	3	
20	01030-06010		SCREW	ｽｸﾘｭ	2	
21	02000-00006		WASHER	ﾜｯｼｬ	2	
22	224T8-02201		CAP	ｷｬｯﾌﾟ	2	
23	224T8-02001		BUSHING	ﾌﾞｯｼﾝｸﾞ	2	
24	01103-20085		BOLT	ﾎﾞﾙﾄ	4	
25	02010-00020		WASHER	ﾜｯｼｬ	4	
26	224T8-52501		PIN	ﾋﾟﾝ	2	
27	23648-50161		PLATE	ﾌﾟﾚｰﾄ	2	
28	01184-10020		BOLT	ﾎﾞﾙﾄ	4	
29	23678-06002		PLATE,NAME	ﾌﾟﾚｰﾄ	1	

LAMP GUARD

FIG.159 [(HL,HLG/HL,BKH)/VM24U](FREE LIFT TYPE)

(M4048370) ﾗﾝﾌﾟｶﾞｰﾄﾞ

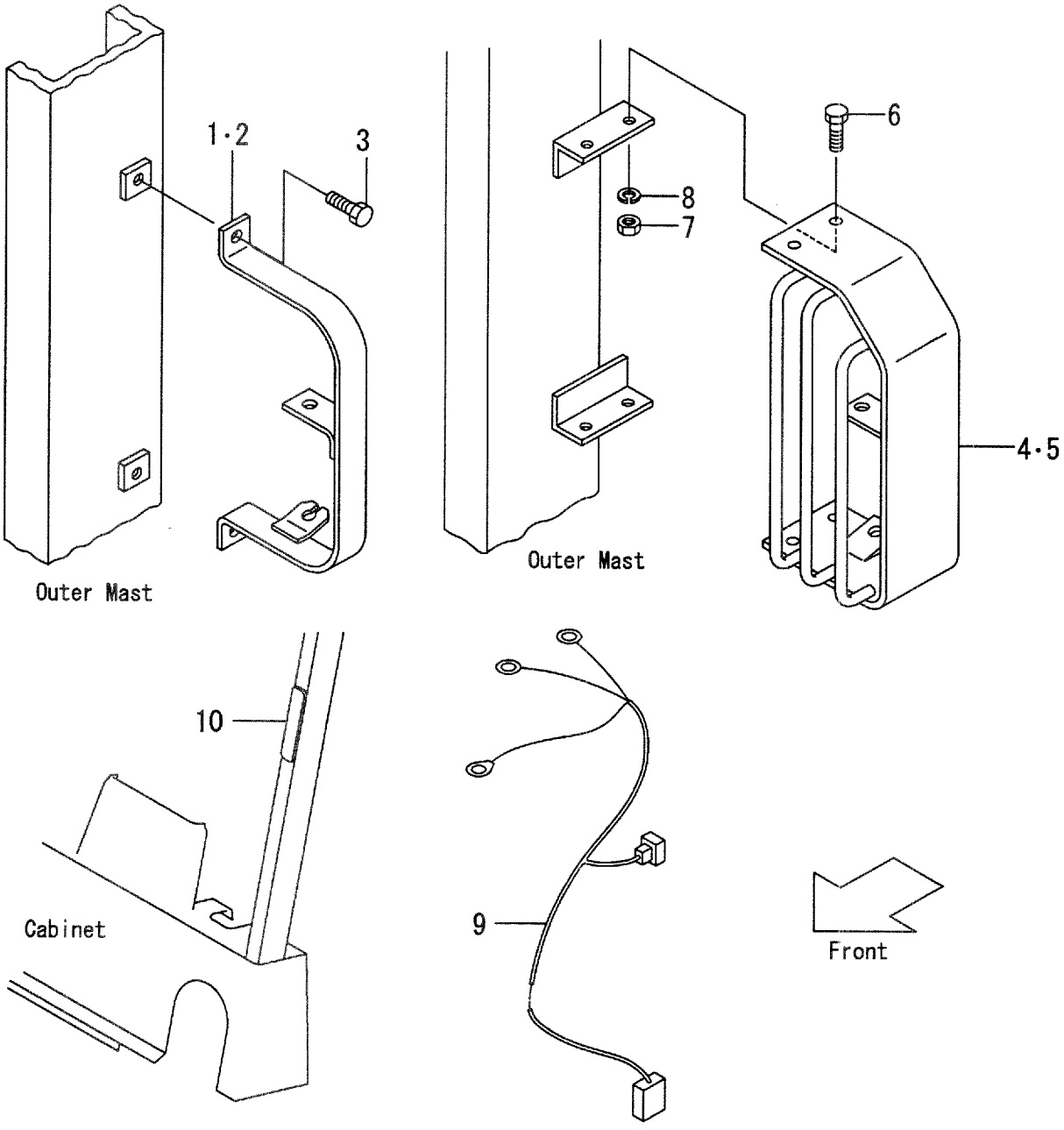

A:VM24U(FD35,40,FG35,40)

Item No	Part No.	Mark	Description		Req'd	Remarks : Serial No.
1	214A2-43121		BRACKET,LH	ﾌﾞﾗｹｯﾄ	1	[HL]
2	214A2-43131		BRACKET,RH	ﾌﾞﾗｹｯﾄ	1	[HL]
3	01184-12020		BOLT	ﾎﾞﾙﾄ	4	[HL]
4	210F2-42051		GUARD,HEAD-LAMP,LH	ｶﾞｰﾄﾞ	1	[HLG/HL][BKH]
5	210F2-42071		GUARD,HEAD-LAMP,RH	ｶﾞｰﾄﾞ	1	[HLG/HL][BKH]
6	01100-12030		BOLT	ﾎﾞﾙﾄ	8	[HLG/HL][BKH]
7	02010-00012		WASHER	ﾜｯｼｬ	8	[HLG/HL][BKH]
8	01400-00012		NUT	ﾅｯﾄ	8	[HLG/HL][BKH]
9	224W2-43081		WIRE-HARNESS	ﾜｲﾔﾊｰﾈｽ	2	[HL/VM250-275] [HGL/HL/VM250-275] [BKH/VM250-275]
-	224W2-43091		WIRE-HARNESS	ﾜｲﾔﾊｰﾈｽ	2	[HL/VM300-600] [HGL/HL/VM300-600] [BKH/VM300-600]
10	524W5-42061		BRACKET	ﾌﾞﾗｹｯﾄ	2	[HL][HLG/HL][BKH]

FIG.160 LIFT CYLINDER [VM24U](FREE LIFT TYPE)

(M4048420) リフトシリンダ

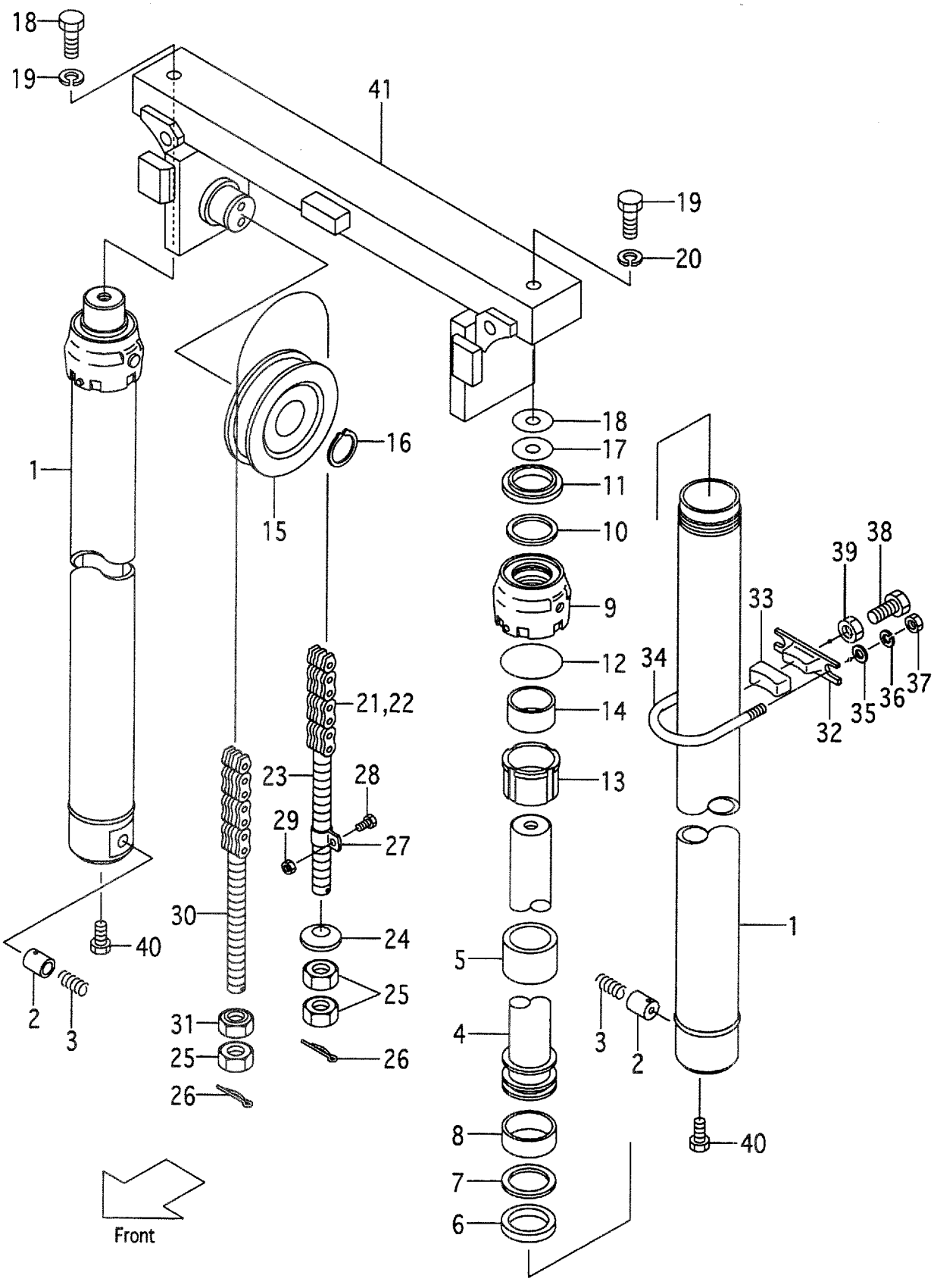

A:VM24U(FD35,40,FG35,40)

Item No	Part No.	Mark	Description	Req'd	Remarks : Serial No.
A1	224T8-40011		CYL-ASSY,LIFT VM250 リフトシリンダアッセン	2	INC.1-18
-	224T8-40021		CYL-ASSY,LIFT VM270 リフトシリンダアッセン	2	INC.1-18
-	224T8-40031		CYL-ASSY,LIFT VM275 リフトシリンダアッセン	2	INC.1-18
-	224T8-40001		CYL-ASSY,LIFT VM300 リフトシリンダアッセン	2	INC.1-18
-	224T8-40041		CYL-ASSY,LIFT VM325 リフトシリンダアッセン	2	INC.1-18
-	224T8-40051		CYL-ASSY,LIFT VM330 リフトシリンダアッセン	2	INC.1-18
-	224T8-40061		CYL-ASSY,LIFT VM350 リフトシリンダアッセン	2	INC.1-18
-	224T8-40071		CYL-ASSY,LIFT VM366 リフトシリンダアッセン	2	INC.1-18
-	224T8-40081		CYL-ASSY,LIFT VM370 リフトシリンダアッセン	2	INC.1-18
-	224T8-40091		CYL-ASSY,LIFT VM375 リフトシリンダアッセン	2	INC.1-18
-	224T8-40101		CYL-ASSY,LIFT VM400 リフトシリンダアッセン	2	INC.1-18
-	224T8-40111		CYL-ASSY,LIFT VM425 リフトシリンダアッセン	2	INC.1-18
-	224T8-40121		CYL-ASSY,LIFT VM450 リフトシリンダアッセン	2	INC.1-18
-	224T8-40131		CYL-ASSY,LIFT VM475 リフトシリンダアッセン	2	INC.1-18
-	224T8-40141		CYL-ASSY,LIFT VM500 リフトシリンダアッセン	2	INC.1-18
-	224T8-40151		CYL-ASSY,LIFT VM550 リフトシリンダアッセン	2	INC.1-18
-	224T8-40161		CYL-ASSY,LIFT VM600 リフトシリンダアッセン	2	INC.1-18
1	224T8-40212		TUBE VM250 チューブ	2	
-	224T8-40222		TUBE VM270 チューブ	2	
-	224T8-40232		TUBE VM275 チューブ	2	
-	224T8-40202		TUBE VM300 チューブ	2	
-	224T8-40242		TUBE VM325 チューブ	2	
-	224T8-40252		TUBE VM330 チューブ	2	
-	224T8-40262		TUBE VM350 チューブ	2	
-	224T8-40272		TUBE VM366 チューブ	2	
-	224T8-40282		TUBE VM370 チューブ	2	
-	224T8-40292		TUBE VM375 チューブ	2	
-	224T8-40302		TUBE VM400 チューブ	2	
-	224T8-40312		TUBE VM425 チューブ	2	
-	224T8-40322		TUBE VM450 チューブ	2	
-	224T8-40332		TUBE VM475 チューブ	2	
-	224T8-40342		TUBE VM500 チューブ	2	
-	224T8-40352		TUBE VM550 チューブ	2	
-	224T8-40362		TUBE VM600 チューブ	2	
2	224T8-42801		PISTON ピストン	2	
3	25908-44281		SPRING スプリング	2	
4	224T8-40411		ROD,PISTON VM250 ロッド	2	
-	224T8-40421		ROD,PISTON VM270 ロッド	2	
-	224T8-40431		ROD,PISTON VM275 ロッド	2	
-	224T8-40401		ROD,PISTON VM300 ロッド	2	
-	224T8-40441		ROD,PISTON VM325 ロッド	2	
-	224T8-40451		ROD,PISTON VM330 ロッド	2	
-	224T8-40461		ROD,PISTON VM350 ロッド	2	
-	224T8-40471		ROD,PISTON VM366 ロッド	2	
-	224T8-40481		ROD,PISTON VM370 ロッド	2	
-	224T8-40491		ROD,PISTON VM375 ロッド	2	
-	224T8-40501		ROD,PISTON VM400 ロッド	2	
-	224T8-40511		ROD,PISTON VM425 ロッド	2	
-	224T8-40521		ROD,PISTON VM450 ロッド	2	
-	224T8-40531		ROD,PISTON VM475 ロッド	2	

FIG.160 LIFT CYLINDER [VM24U](FREE LIFT TYPE)

(M4048420) リフトシリンダ

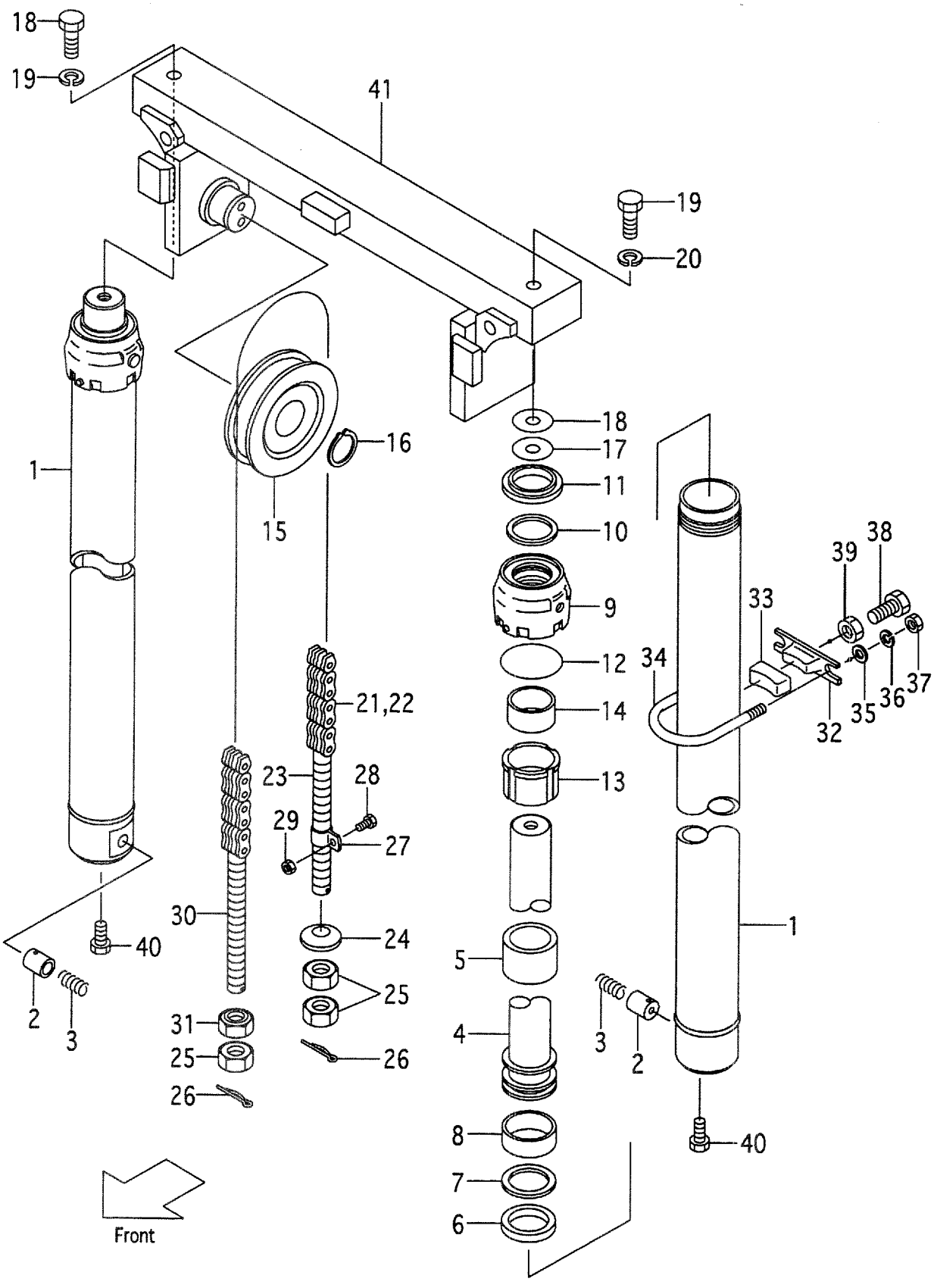

A:VM24U(FD35,40,FG35,40)

Item No	Part No.	Mark	Description		Req'd	Remarks : Serial No.
-	224T8-40541		ROD,PISTON VM500	ﾛｯﾄﾞ	2	
-	224T8-40551		ROD,PISTON VM550	ﾛｯﾄﾞ	2	
-	224T8-40561		ROD,PISTON VM600	ﾛｯﾄﾞ	2	
5	224T8-42471		SPACER	ｽﾍﾟｰｻ	2	(VM400-500)
-	224T8-42481		SPACER	ｽﾍﾟｰｻ	2	(VM550-600)
6	224T8-42521	*	PACKING	ﾊﾟｯｷﾝｸﾞ	2	
7	224T8-42541	*	RING,BACK-UP	ﾘﾝｸﾞ	2	
8	224T8-42531	*	WEARING	ｳｴｱﾘﾝｸﾞ	2	
9	224T8-42402		CAP	ｷｬｯﾌﾟ	2	
10	224T8-46011	*	PACKING	ﾊﾟｯｷﾝｸﾞ	2	
11	224T8-46001	*	SEAL,DUST	ｼｰﾙ	2	
12	03340-00100	*	O-RING	Oﾘﾝｸﾞ	2	
A3	224T8-40612		SLEEVE-ASSY	ｽﾘｰﾌﾞｱｯｾﾝ	2	INC.13,14
13	224T8-42412		SLEEVE	ｽﾘｰﾌﾞ	2	
14	23460-53171		BUSHING	ﾌﾞｯｼﾝｸﾞ	2	
15	24609-41241		SHEAVE	ｼｰﾌﾞ	2	
16	02100-00050		RING,SNAP	ｽﾅｯﾌﾟﾘﾝｸﾞ	2	
17	24319-45781		SHIM,T-0.2	ｼﾑ	4	
18	24319-45791		SHIM,T-1.0	ｼﾑ	2	
19	01103-16065		BOLT	ﾎﾞﾙﾄ	2	
20	02011-00016		WASHER	ﾜｯｼｬ	2	
21	23918-45791		CHAIN,LEAF VM250	ﾁｪｰﾝ	2	INC.22
-	23918-45871		CHAIN,LEAF VM270	ﾁｪｰﾝ	2	INC.22
-	23918-45891		CHAIN,LEAF VM275	ﾁｪｰﾝ	2	
-	23918-45891		CHAIN,LEAF VM275	ﾁｪｰﾝ	2	INC.22
-	23918-45971		CHAIN,LEAF VM300	ﾁｪｰﾝ	2	INC.22
-	23918-46071		CHAIN,LEAF VM325	ﾁｪｰﾝ	2	INC.22
-	23918-46091		CHAIN,LEAF VM330	ﾁｪｰﾝ	2	INC.22
-	23918-46171		CHAIN,LEAF VM350	ﾁｪｰﾝ	2	INC.22
-	23918-46231		CHAIN,LEAF VM366	ﾁｪｰﾝ	2	INC.22
-	23918-46251		CHAIN,LEAF VM370	ﾁｪｰﾝ	2	INC.22
-	23918-46271		CHAIN,LEAF VM375	ﾁｪｰﾝ	2	INC.22
-	23918-45991		CHAIN,LEAF VM400	ﾁｪｰﾝ	2	INC.22
-	23918-46051		CHAIN,LEAF VM425	ﾁｪｰﾝ	2	INC.22
-	23918-46091		CHAIN,LEAF VM450	ﾁｪｰﾝ	2	INC.22
-	23918-46191		CHAIN,LEAF VM475	ﾁｪｰﾝ	2	INC.22
-	23918-46291		CHAIN,LEAF VM500	ﾁｪｰﾝ	2	INC.22
-	23918-46311		CHAIN,LEAF VM550	ﾁｪｰﾝ	2	INC.22
-	23918-46411		CHAIN,LEAF VM600	ﾁｪｰﾝ	2	INC.22
22	23958-42921		LINK	ﾘﾝｸ	2	
23	24329-45441		PIN	ﾋﾟﾝ	2	
24	24319-45751		CORN	ｺｰﾝ	2	
25	01402-00022		NUT	ﾅｯﾄ	6	
26	02200-03040		PIN,COTTER	ﾋﾟﾝ	4	
27	224T8-42621		CLIP	ｸﾘｯﾌﾟ	2	
28	01183-06016		BOLT	ﾎﾞﾙﾄ	2	
29	01400-00006		NUT	ﾅｯﾄ	2	
30	23918-42681		PIN	ﾋﾟﾝ	2	
31	23818-30271		NUT	ﾅｯﾄ	2	
32	224T8-42711		SUPPORT	ｻﾎﾟｰﾄ	2	(VM250-550)

FIG.160 LIFT CYLINDER [VM24U](FREE LIFT TYPE)

(M4048420) リフトシリンダ

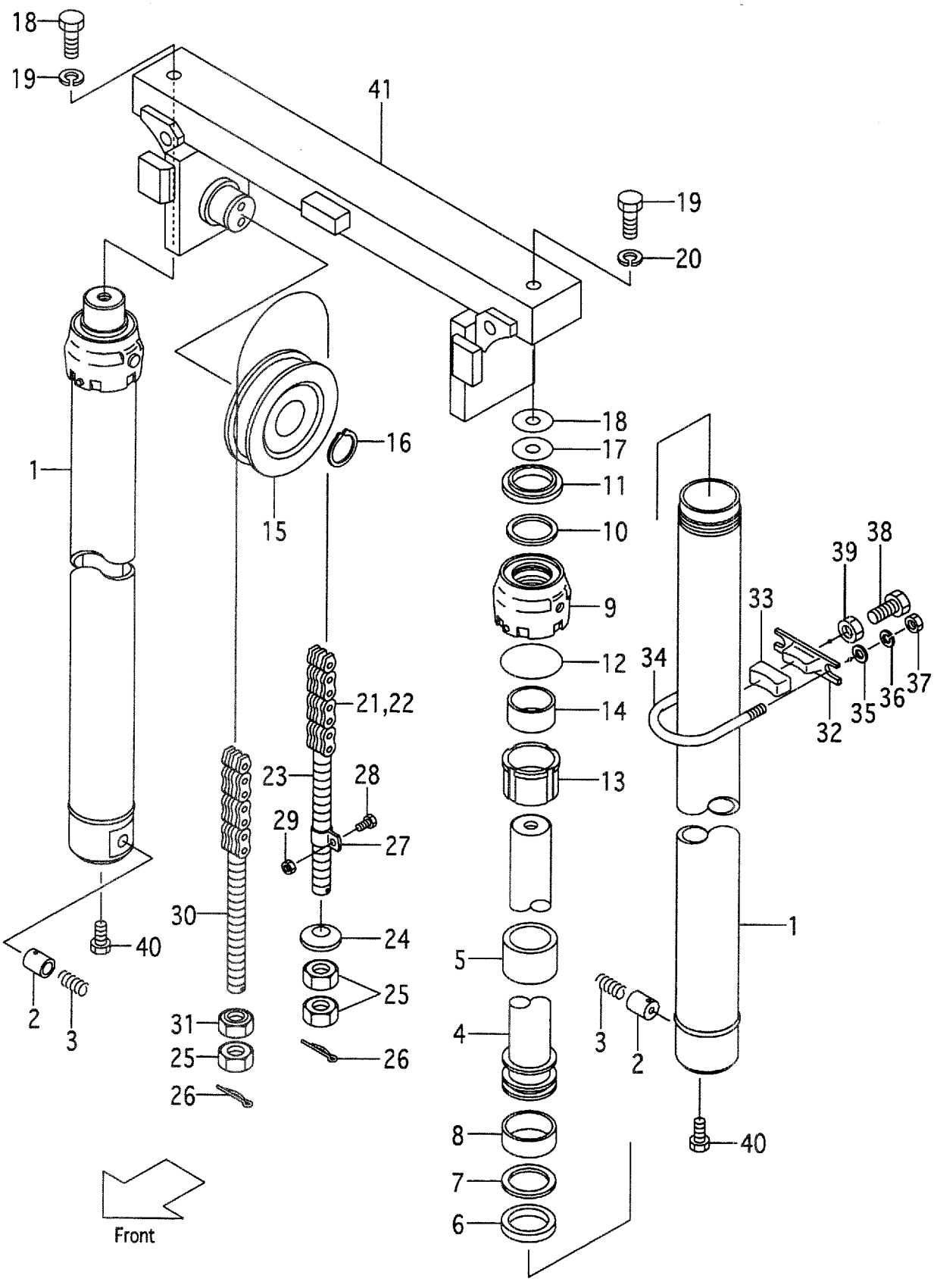

A:VM24U(FD35,40,FG35,40)

Item No	Part No.	Mark	Description		Req'd	Remarks : Serial No.
-	224T8-42711		SUPPORT	ｻﾎﾟｰﾄ	4	(VM600)
33	214A8-42631		RUBBER	ﾗﾊﾞｰ	2	(VM250-550)
-	214A8-42631		RUBBER	ﾗﾊﾞｰ	4	(VM600)
34	224T8-42701		U-BOLT	Uﾎﾞﾙﾄ	2	(VM250-550)
-	224T8-42701		U-BOLT	Uﾎﾞﾙﾄ	4	(VM600)
35	02000-00010		WASHER	ﾜｯｼｬ	4	(VM250-550)
-	02000-00010		WASHER	ﾜｯｼｬ	8	(VM600)
36	02010-00010		WASHER	ﾜｯｼｬ	4	(VM250-550)
-	02010-00010		WASHER	ﾜｯｼｬ	8	(VM600)
37	01400-00010		NUT	ﾅｯﾄ	4	(VM250-550)
-	01400-00010		NUT	ﾅｯﾄ	8	(VM600)
38	01120-16040		BOLT	ﾎﾞﾙﾄ	2	(VM250-550)
-	01120-16040		BOLT	ﾎﾞﾙﾄ	4	(VM600)
39	01402-00016		NUT	ﾅｯﾄ	2	(VM250-550)
-	01402-00016		NUT	ﾅｯﾄ	4	(VM600)
40	214A0-82831		BOLT	ﾎﾞﾙﾄ	2	
41	224U8-42001		HEAD,PISTON	ﾍｯﾄﾞ	1	
K1	224T8-49803		KIT,OVERHAUL	ｵｰﾊﾞｰﾎｰﾙｷｯﾄ	2	INC.6-8,10-12

FIG.161 MAST PIPING [VM24U](FREE LIFT TYPE)

(M4048470) マストパイピング

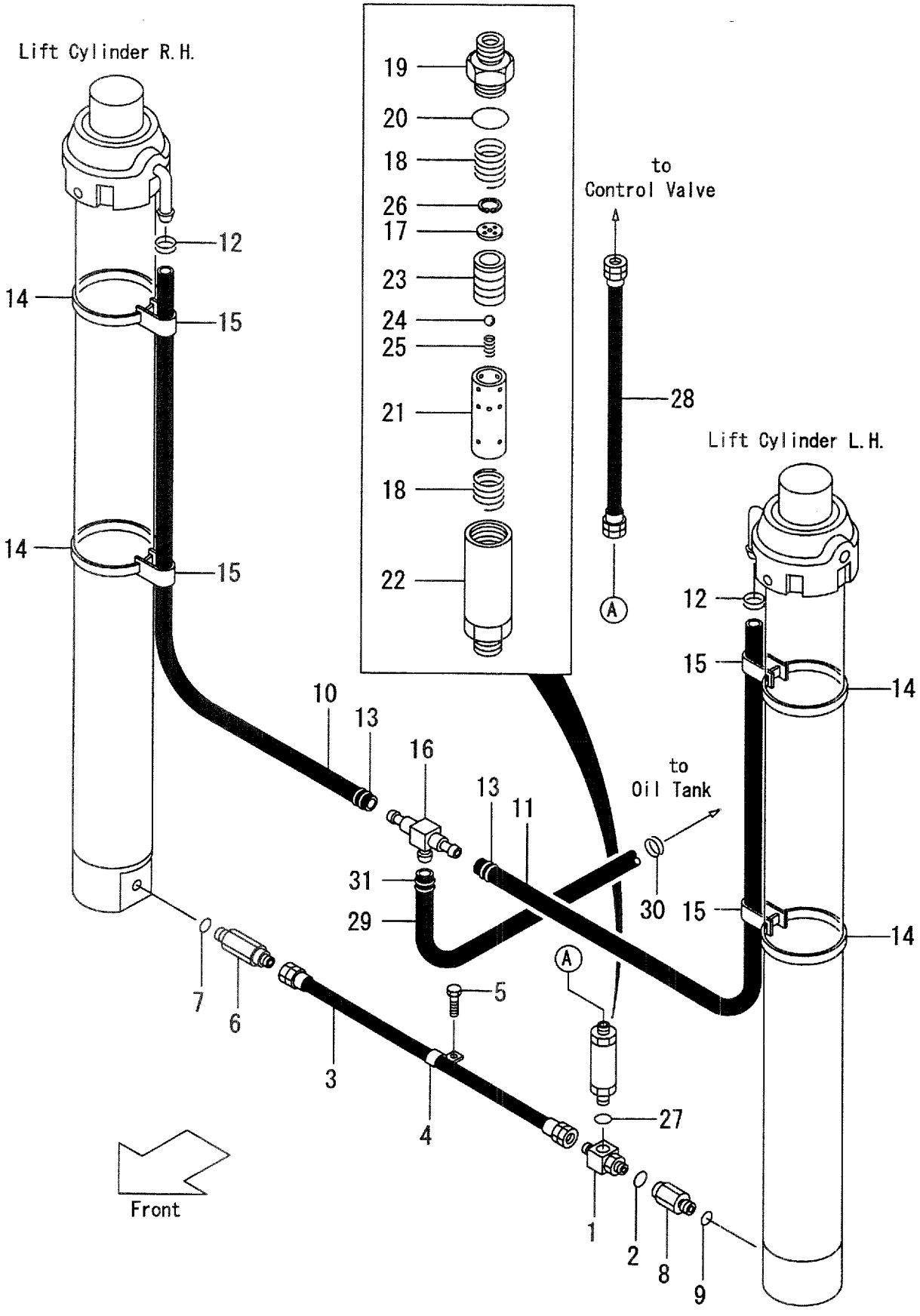

A:VM24U(FD35,40,FG35,40)

Item No	Part No.	Mark	Description		Req'd	Remarks : Serial No.
A1	24609-43682		THREE-WAY-ASSY	ｽﾘｰｳｪｲｱｯｾﾝ	1	INC.1,2
1	NO PART NO.	#	THREE-WAY	ｽﾘｰｳｴｲ	1	
2	03320-00180		O-RING	Oﾘﾝｸﾞ	1	
3	224T8-42861		HOSE,HP	ﾎｰｽ	1	
4	214A8-43081		CLIP	ｸﾘｯﾌﾟ	1	
5	01184-10020		BOLT	ﾎﾞﾙﾄ	1	
A2	224T8-44001		NIPPLE-ASSY	ﾆｯﾌﾟﾙｱｯｾﾝ	1	INC.6,7
6	NO PART NO.	#	NIPPLE	ﾆｯﾌﾟﾙ	1	
7	03320-00240		O-RING	Oﾘﾝｸﾞ	1	
A3	224T8-44021		NIPPLE-ASSY	ﾆｯﾌﾟﾙｱｯｾﾝ	1	INC.8,9
8	NO PART NO.	#	NIPPLE	ﾆｯﾌﾟﾙ	1	
9	03320-00240		O-RING	Oﾘﾝｸﾞ	1	
10	24328-40080		HOSE,RH VM250	ﾎｰｽ	1	
-	24328-40090		HOSE,RH VM270	ﾎｰｽ	1	
-	24328-40095		HOSE,RH VM275	ﾎｰｽ	1	
-	24328-40105		HOSE,RH VM300	ﾎｰｽ	1	
-	24328-40120		HOSE,RH VM325	ﾎｰｽ	1	
-	24328-40120		HOSE,RH VM330	ﾎｰｽ	1	
-	24328-40130		HOSE,RH VM350	ﾎｰｽ	1	
-	24328-40140		HOSE,RH VM366	ﾎｰｽ	1	
-	24328-40140		HOSE,RH VM370	ﾎｰｽ	1	
-	24328-40145		HOSE,RH VM375	ﾎｰｽ	1	
-	24328-40160		HOSE,RH VM400	ﾎｰｽ	1	
-	24328-40175		HOSE,RH VM425	ﾎｰｽ	1	
-	24328-40185		HOSE,RH VM450	ﾎｰｽ	1	
-	24328-40200		HOSE,RH VM475	ﾎｰｽ	1	
-	24328-40210		HOSE,RH VM500	ﾎｰｽ	1	
-	24328-40240		HOSE,RH VM550	ﾎｰｽ	1	
-	24328-40265		HOSE,RH VM600	ﾎｰｽ	1	
11	24328-40130		HOSE,LH VM250	ﾎｰｽ	1	
-	24328-40140		HOSE,LH VM270	ﾎｰｽ	1	
-	24328-40145		HOSE,LH VM275	ﾎｰｽ	1	
-	24328-40155		HOSE,LH VM300	ﾎｰｽ	1	
-	24328-40170		HOSE,LH VM325	ﾎｰｽ	1	
-	24328-40170		HOSE,LH VM330	ﾎｰｽ	1	
-	24328-40180		HOSE,LH VM350	ﾎｰｽ	1	
-	24328-40190		HOSE,LH VM366	ﾎｰｽ	1	
-	24328-40190		HOSE,LH VM370	ﾎｰｽ	1	
-	24328-40195		HOSE,LH VM375	ﾎｰｽ	1	
-	24328-40210		HOSE,LH VM400	ﾎｰｽ	1	
-	24328-40225		HOSE,LH VM425	ﾎｰｽ	1	
-	24328-40235		HOSE,LH VM450	ﾎｰｽ	1	
-	24328-40250		HOSE,LH VM475	ﾎｰｽ	1	
-	24328-40260		HOSE,LH VM500	ﾎｰｽ	1	
-	24328-40290		HOSE,LH VM550	ﾎｰｽ	1	
-	24328-40315		HOSE,LH VM600	ﾎｰｽ	1	
12	04911-00022		CLIP	ｸﾘｯﾌﾟ	2	
13	24329-46201		CLIP	ｸﾘｯﾌﾟ	2	
14	23678-42411		BAND	ﾊﾞﾝﾄﾞ	4	
15	53675-54101		BAND	ﾊﾞﾝﾄﾞ	4	

FIG.161 MAST PIPING [VM24U](FREE LIFT TYPE)

(M4048470) マストパイピング

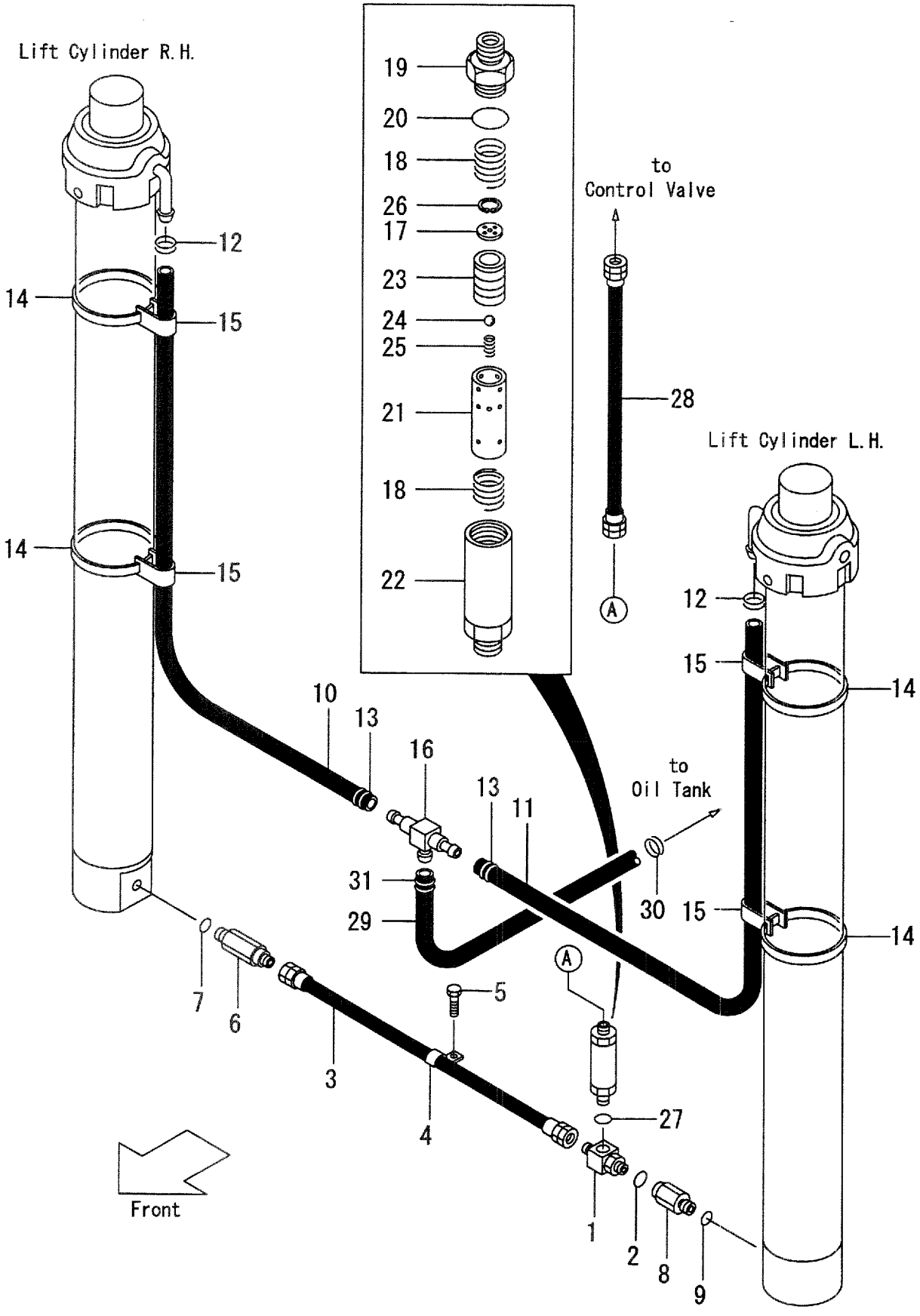

A:VM24U(FD35,40,FG35,40)

Item No	Part No.	Mark	Description		Req'd	Remarks : Serial No.
16	24329-46052		THREE-WAY	ｽﾘｰｳｴｲ	1	
A4	224T8-41002		REGULATOR-ASSY,FLOW	ﾚｷﾞｭﾚｰﾀｱｯｾﾝ	1	INC.17-26
17	NO PART NO.	#	PLATE,ORIFICE	ﾌﾟﾚｰﾄ	1	
18	24609-43631		SPRING	ｽﾌﾟﾘﾝｸﾞ	2	
19	NO PART NO.	#	NIPPLE	ﾆｯﾌﾟﾙ	1	
20	03300-00360		O-RING	Oﾘﾝｸﾞ	1	(OLD PART)
-	03320-00360		O-RING	Oﾘﾝｸﾞ	1	(NEW PART)
21	NO PART NO.	#	SLEEVE	ｽﾘｰﾌﾞ	1	
22	NO PART NO.	#	CASE	ｹｰｽ	1	
23	NO PART NO.	#	PISTON	ﾋﾟｽﾄﾝ	1	
24	24459-42951		BALL	ﾎﾞｰﾙ	1	
25	214A8-44151		SPRING	ｽﾌﾟﾘﾝｸﾞ	1	
26	02110-00020		RING,SNAP	ｽﾅｯﾌﾟﾘﾝｸﾞ	1	
27	03320-00240		O-RING	Oﾘﾝｸﾞ	1	
28	224T8-02101		HOSE,HP	ﾎｰｽ	1	
29	04710-06113		HOSE,LP	ﾎｰｽ	1	
30	04911-00032		CLIP	ｸﾘｯﾌﾟ	1	
31	24329-46211		CLIP	ｸﾘｯﾌﾟ	1	

FIG.162 FORK & LIFT BRACKET [VM28C]

(M4048230) フォーク&リフトブラケット

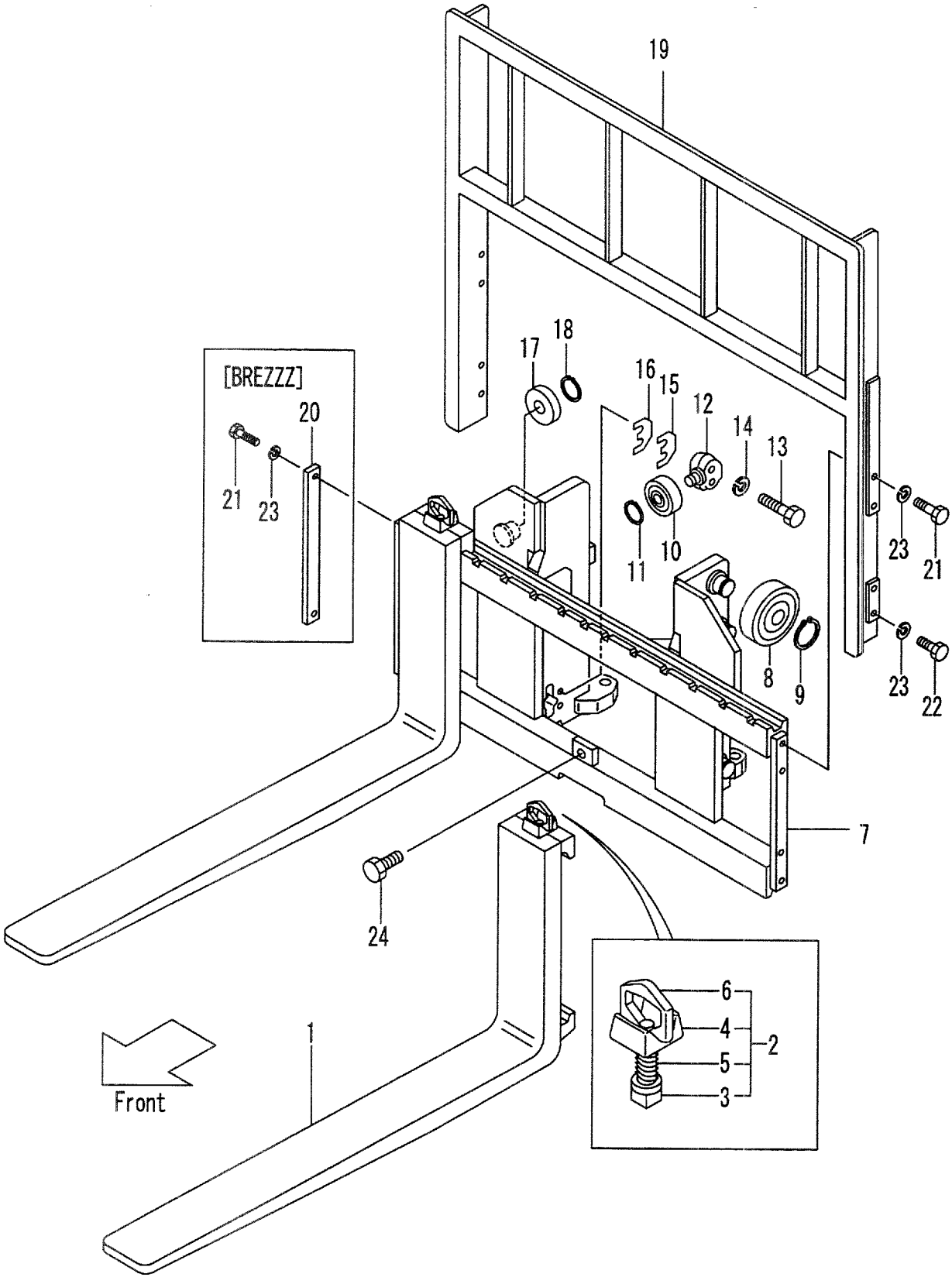

A:VM28C(FD45,FG45)

Item No	Part No.	Mark	Description	Req'd	Remarks : Serial No.
1	228A8-10613		FORK フォーク	2	MAST NO.1-1213 (L=1070) INC.3-6
-	228A8-10614		FORK フォーク	2	MAST NO.1214- (L=1070) INC.3-6
-	228A8-10603		FORK フォーク	2	MAST NO.1-1213 [LF100] INC.3-6
-	228A8-10604		FORK フォーク	2	MAST NO.1214- [LF100] INC.3-6
-	228A8-10613		FORK フォーク	2	MAST NO.1-1213 [LF107] INC.3-6
-	228A8-10614		FORK フォーク	2	MAST NO.1214- [LF107] INC.3-6
-	228A8-10623		FORK フォーク	2	MAST NO.1-1213 [LF110] INC.3-6
-	228A8-10624		FORK フォーク	2	MAST NO.1214- [LF110] INC.3-6
-	228A8-10633		FORK フォーク	2	MAST NO.1-1213 [LF120] INC.3-6
-	228A8-10634		FORK フォーク	2	MAST NO.1214- [LF120] INC.3-6
-	228A8-10643		FORK フォーク	2	MAST NO.1-1213 [LF122] INC.3-6
-	228A8-10644		FORK フォーク	2	MAST NO.1214- [LF122] INC.3-6
-	228A8-10743		FORK フォーク	2	MAST NO.1-1213 [LF130] INC.3-6
-	228A8-10744		FORK フォーク	2	MAST NO.1214- [LF130] INC.3-6
-	228A8-10653		FORK フォーク	2	MAST NO.1-1213 [LF137] INC.3-6
-	228A8-10654		FORK フォーク	2	MAST NO.1214- [LF137] INC.3-6
-	228A8-10753		FORK フォーク	2	MAST NO.1-1213 [LF140] INC.3-6
-	228A8-10754		FORK フォーク	2	MAST NO.1214- [LF140] INC.3-6
-	228A8-10763		FORK フォーク	2	MAST NO.1-1213 [LF150] INC.3-6
-	228A8-10764		FORK フォーク	2	MAST NO.1214- [LF150] INC.3-6
-	228A8-10663		FORK フォーク	2	MAST NO.1-1213 [LF152] INC.3-6
-	228A8-10664		FORK フォーク	2	MAST NO.1214- [LF152] INC.3-6
-	228A8-10773		FORK フォーク	2	MAST NO.1-1213 [LF160] INC.3-6
-	228A8-10774		FORK フォーク	2	MAST NO.1214- [LF160] INC.3-6
-	228A8-10673		FORK フォーク	2	MAST NO.1-1213 [LF167] INC.3-6

FIG.162 FORK & LIFT BRACKET [VM28C]

(M4048230) フォーク&リフトブラケット

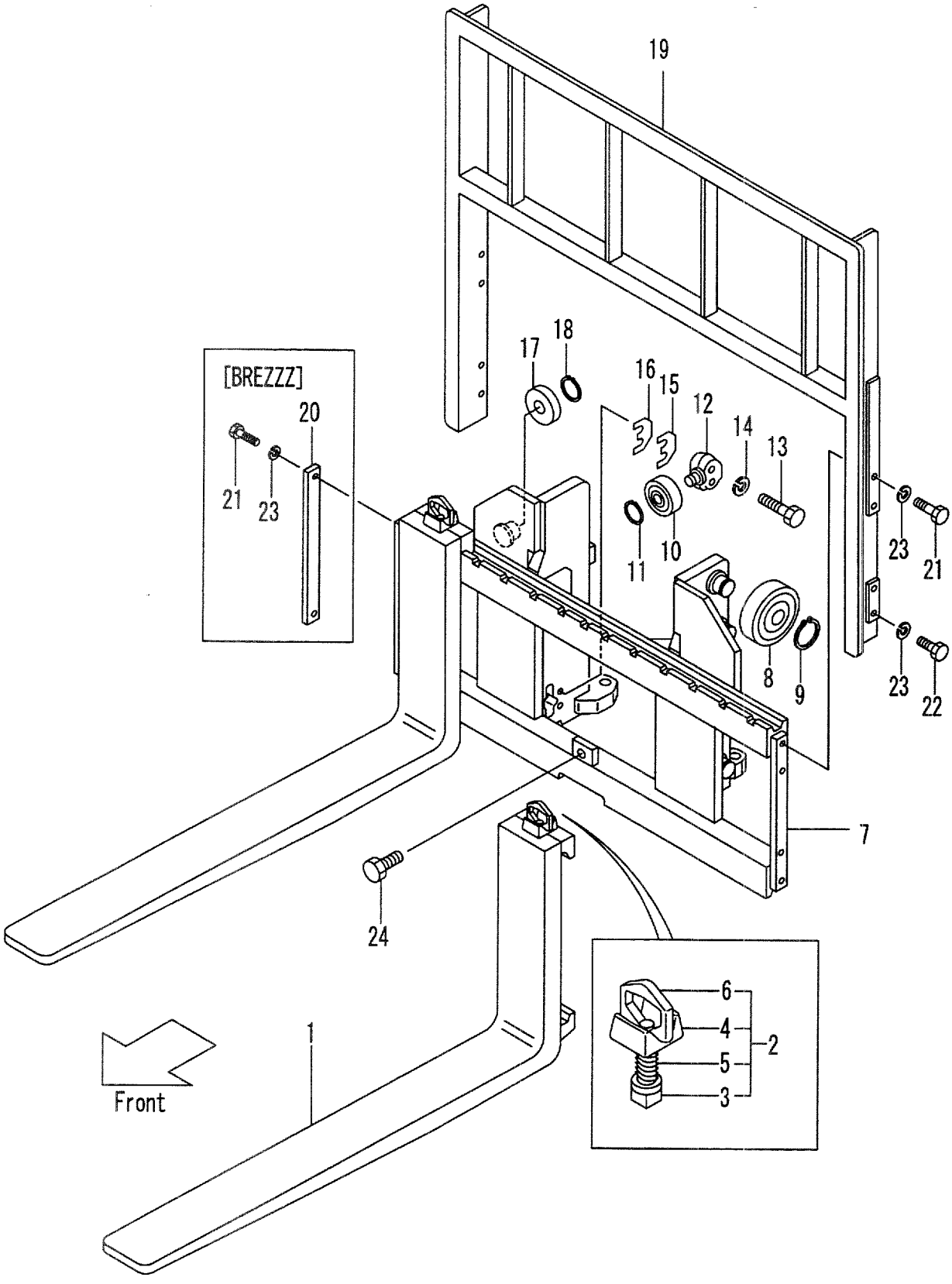

A:VM28C(FD45,FG45)

Item No	Part No.	Mark	Description		Req'd	Remarks : Serial No.
-	228A8-10674		FORK	ﾌｫｰｸ	2	MAST NO.1214- [LF167] INC.3-6
-	228A8-10783		FORK	ﾌｫｰｸ	2	MAST NO.1-1213 [LF170] INC.3-6
-	228A8-10784		FORK	ﾌｫｰｸ	2	MAST NO.1214- [LF170] INC.3-6
-	228A8-10793		FORK	ﾌｫｰｸ	2	MAST NO.1-1213 [LF180] INC.3-6
-	228A8-10794		FORK	ﾌｫｰｸ	2	MAST NO.1214- [LF180] INC.3-6
-	228A8-10683		FORK	ﾌｫｰｸ	2	MAST NO.1-1213 [LF182] INC.3-6
-	228A8-10684		FORK	ﾌｫｰｸ	2	MAST NO.1214- [LF182] INC.3-6
-	228A8-10803		FORK	ﾌｫｰｸ	2	MAST NO.1-1213 [LF190] INC.3-6
-	228A8-10804		FORK	ﾌｫｰｸ	2	MAST NO.1214- [LF190] INC.3-6
-	228A8-10693		FORK	ﾌｫｰｸ	2	MAST NO.1-1213 [LF197] INC.3-6
-	228A8-10694		FORK	ﾌｫｰｸ	2	MAST NO.1214- [LF197] INC.3-6
-	228A8-10813		FORK	ﾌｫｰｸ	2	MAST NO.1-1104 [LF200] INC.3-6
-	228A8-10814		FORK	ﾌｫｰｸ	2	MAST NO.1105- [LF200] INC.3-6
-	228A8-10823		FORK	ﾌｫｰｸ	2	MAST NO.1-1104 [LF210] INC.3-6
-	228A8-10824		FORK	ﾌｫｰｸ	2	MAST NO.1105- [LF210] INC.3-6
-	228A8-10703		FORK	ﾌｫｰｸ	2	MAST NO.1-1104 [LF212] INC.3-6
-	228A8-10704		FORK	ﾌｫｰｸ	2	MAST NO.1105- [LF212] INC.3-6
-	228A8-10713		FORK	ﾌｫｰｸ	2	MAST NO.1-1104 [LF220] INC.3-6
-	228A8-10714		FORK	ﾌｫｰｸ	2	MAST NO.1105- [LF220] INC.3-6
-	228A8-10723		FORK	ﾌｫｰｸ	2	MAST NO.1-1104 [LF227] INC.3-6
-	228A8-10724		FORK	ﾌｫｰｸ	2	MAST NO.1105- [LF227] INC.3-6
-	228A8-10733		FORK	ﾌｫｰｸ	2	MAST NO.1-1104 [LF230] INC.3-6
-	228A8-10734		FORK	ﾌｫｰｸ	2	MAST NO.1105- [LF230] INC.3-6
2	214J8-11001		STOPPER,FORK	ｽﾄｯﾊﾟ	2	MAST NO.1-1543 INC.3-6
-	214J8-11002		STOPPER,FORK	ｽﾄｯﾊﾟ	2	MAST NO.1544-

FIG.162 FORK & LIFT BRACKET [VM28C]

(M4048230) フォーク&リフトブラケット

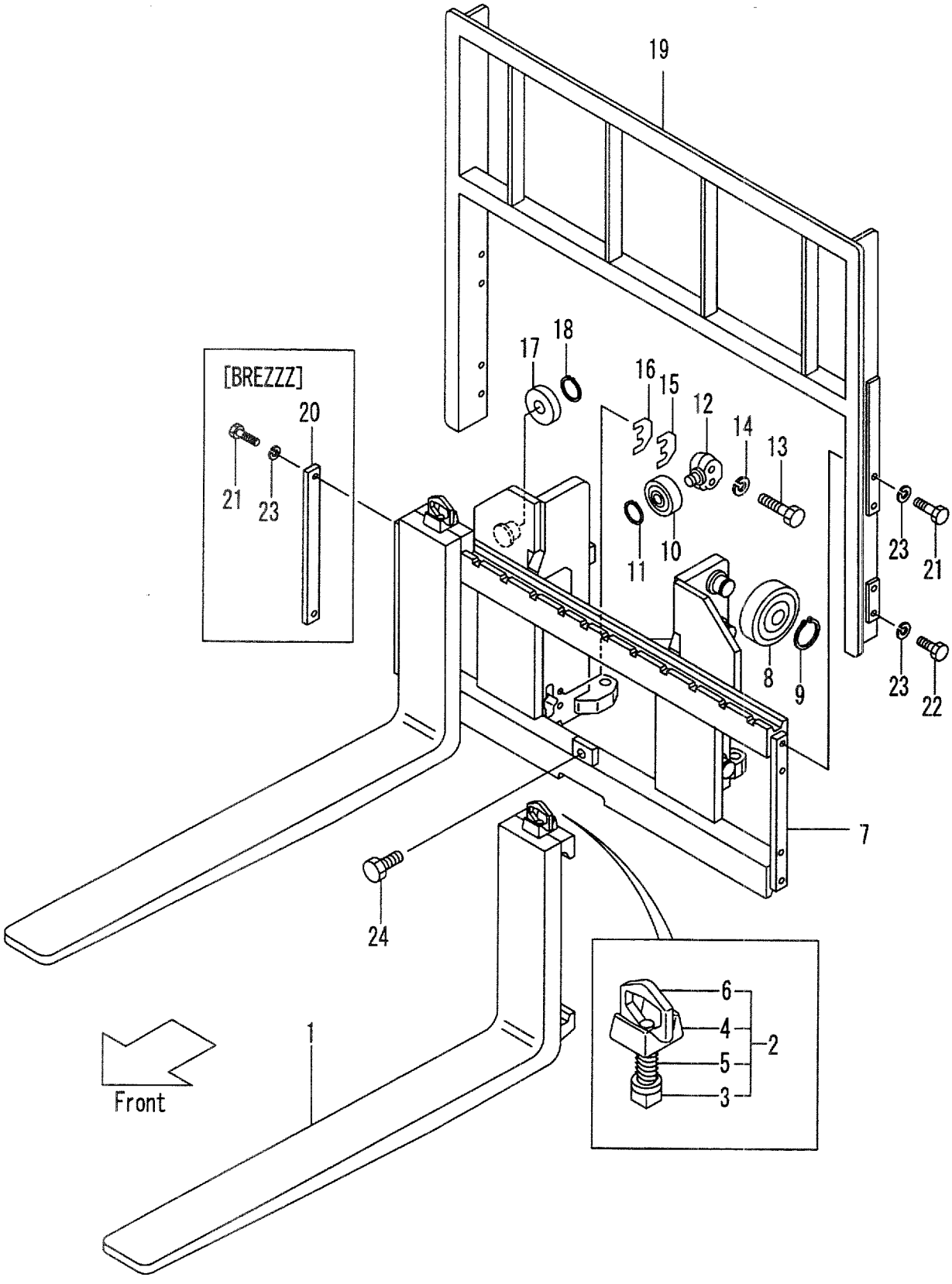

A:VM28C(FD45,FG45)

Item No	Part No.	Mark	Description		Req'd	Remarks : Serial No.
3	NO PART NO.	#	STOPPER	ｽﾄｯﾊﾟ	2	MAST NO.1-1543
4	214J8-12001		HEAD	ﾍｯﾄﾞ	2	MAST NO.1-1543
5	214J8-12031		SPRING	ｽﾌﾟﾘﾝｸﾞ	2	MAST NO.1-1543
6	214A8-12021		HANDLE	ﾊﾝﾄﾞﾙ	2	MAST NO.1-1543
7	228C8-20001		BRACKET,LIFT	ﾌﾞﾗｹｯﾄ	1	
-	228C8-21001		BRACKET,LIFT	ﾌﾞﾗｹｯﾄ	1	[LBR002]
-	528C1-62001		BRACKET,LIFT	ﾌﾞﾗｹｯﾄ	1	[WF150][WF168][WF183] [WF200]
-	528C1-62011		BRACKET,LIFT	ﾌﾞﾗｹｯﾄ	1	[WF180][WF240]
-	528C1-62051		BRACKET LIFT	ﾌﾞﾗｹｯﾄ	1	[LBR002/WF168]
-	528C7-32001		BRACKET,LIFT	ﾌﾞﾗｹｯﾄ	1	[TRB][TRV][TC]
-	528C7-32011		BRACKET,LIFT	ﾌﾞﾗｹｯﾄ	1	[TC/WF168]
-	528C7-32021		BRACKET,LIFT	ﾌﾞﾗｹｯﾄ	1	[TC/WF180]
8	23818-20701		ROLLER,END,143.5	ﾛｰﾗ	6	
-	23958-22081		ROLLER,END,144.0	ﾛｰﾗ	(6)	
9	02100-00050		RING,SNAP	ｽﾅｯﾌﾟﾘﾝｸﾞ	6	
A1	NO PART NO.	#	ROLLER-ASSY,SIDE	ｻｲﾄﾞﾛｰﾗｱｯｾﾝ	2	INC.10-12
10	22198-22341		ROLLER,END,91.5	ﾛｰﾗ	2	
11	02100-00030		RING,SNAP	ｽﾅｯﾌﾟﾘﾝｸﾞ	2	
12	24609-42131		SHAFT	ｼｬﾌﾄ	2	
13	01103-16065		BOLT	ﾎﾞﾙﾄ	4	
14	02011-00016		WASHER	ﾜｯｼｬ	4	
15	24609-42151		SHIM,T-1.0	ｼﾑ	8	
16	24609-42161		SHIM,T-0.2	ｼﾑ	8	
17	22198-22341		ROLLER,END,91.5	ﾛｰﾗ	2	
-	22198-22341		ROLLER,END,91.5	ﾛｰﾗ	2	[WF150][WF168][WF183] [WF200][TRB][TRV][TC] [TC/WF168]
-	22198-22341		ROLLER,END,91.5	ﾛｰﾗ	4	[LRB002][WF180][WF240] [LBR002/WF168][TC/WF180]
-	24258-33401		ROLLER,END,92.0	ﾛｰﾗ	(2)	
-	24258-33401		ROLLER,END,92.0	ﾛｰﾗ	(2)	[WF150][WF168][WF183] [WF200][TRB][TRV][TC] [TC/WF168]
-	24258-33401		ROLLER,END,92.0	ﾛｰﾗ	(4)	[LRB002][WF180][WF240] [LBR002/WF168][TC/WF180]
18	02100-00030		RING,SNAP	ｽﾅｯﾌﾟﾘﾝｸﾞ	2	
-	02100-00030		RING,SNAP	ｽﾅｯﾌﾟﾘﾝｸﾞ	2	[WF150][WF168][WF183] [WF200][TRB][TRV][TC] [TC/WF168]
-	02100-00030		RING,SNAP	ｽﾅｯﾌﾟﾘﾝｸﾞ	4	[LRB002][WF180][WF240] [LBR002/WF168][TC/WF180]
19	224T8-22301		BACKREST	ﾊﾞｯｸﾚｽﾄ	1	
-	524T2-74001		BACKREST	ﾊﾞｯｸﾚｽﾄ	1	[EXA][EXC]
-	524T1-64301		BACKREST	ﾊﾞｯｸﾚｽﾄ	1	[WF168][WBR]
-	524T1-64311		BACKREST	ﾊﾞｯｸﾚｽﾄ	1	[WF180][WWB]
-	224T8-22601		BACKREST,H-1300	ﾊﾞｯｸﾚｽﾄ	1	[HBR]
-	224T8-22611		BACKREST,H-1400	ﾊﾞｯｸﾚｽﾄ	1	[HBR]
-	224T8-22621		BACKREST,H-1500	ﾊﾞｯｸﾚｽﾄ	1	[HBR]
-	224T8-22631		BACKREST,H-1600	ﾊﾞｯｸﾚｽﾄ	1	[HBR]

FIG.162 FORK & LIFT BRACKET [VM28C]

(M4048230) フォーク&リフトブラケット

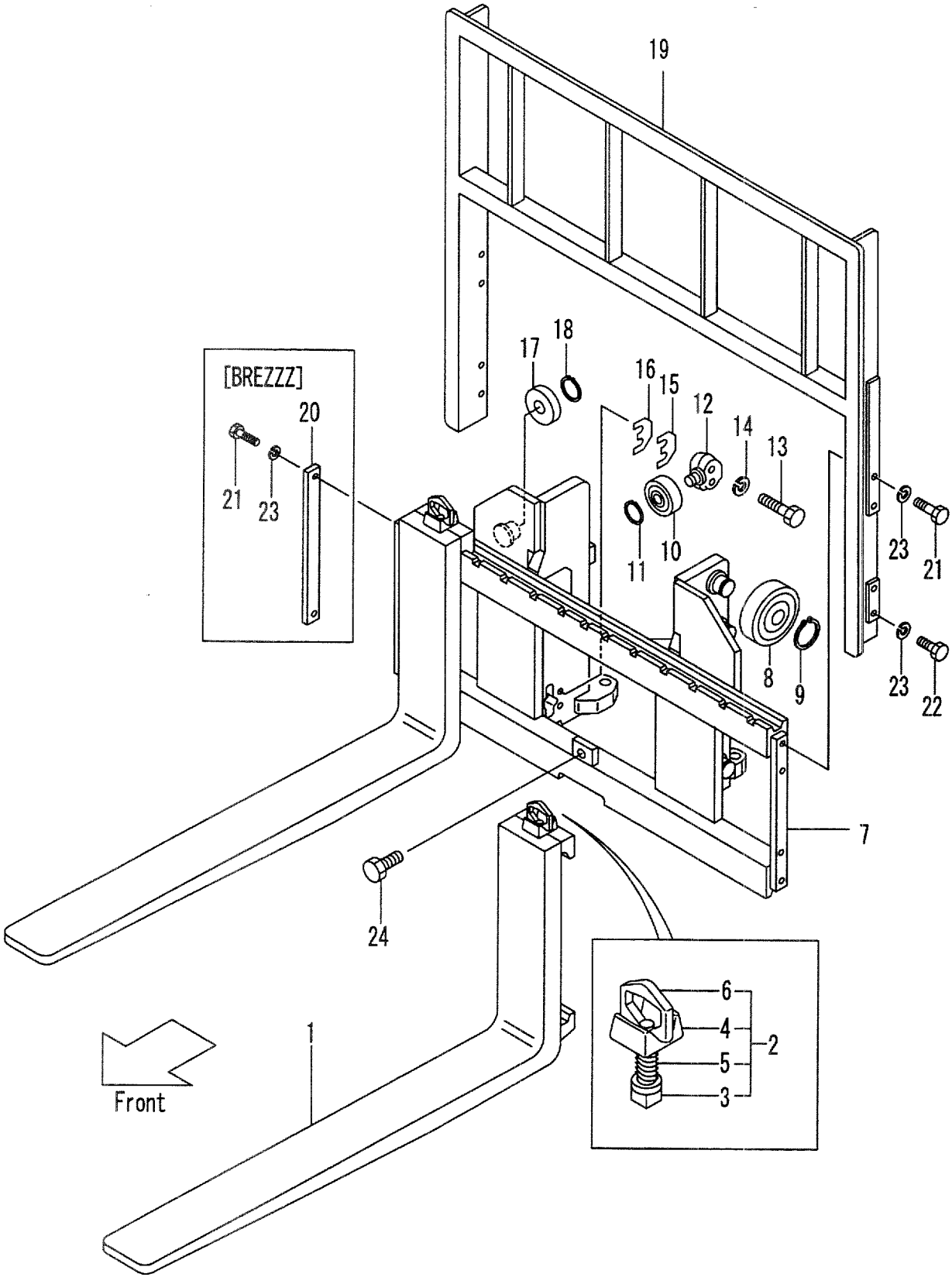

A:VM28C(FD45,FG45)

Item No	Part No.	Mark	Description		Req'd	Remarks : Serial No.
20	24310-62001		PLATE	ﾌﾟﾚｰﾄ	2	[BREZZZ]
21	01100-14030		BOLT	ﾎﾞﾙﾄ	4	
22	01100-14025		BOLT	ﾎﾞﾙﾄ	4	
23	02010-00014		WASHER	ﾜｯｼｬ	8	
-	02010-00014		WASHER	ﾜｯｼｬ	4	[BREZZZ]
24	01184-12025		BOLT	ﾎﾞﾙﾄ	1	

FIG.163 MAST [VM28C]

(M4048330) マスト

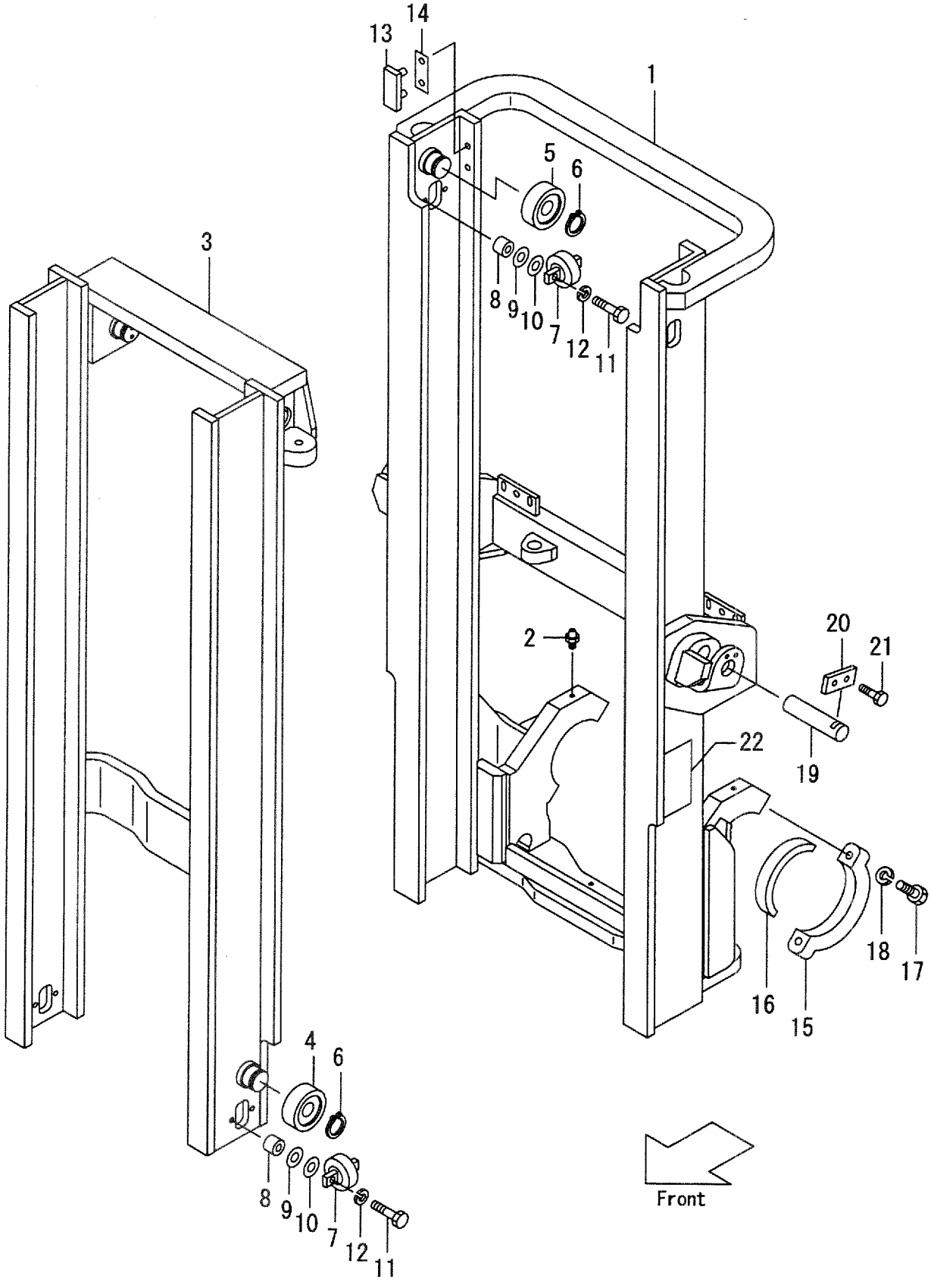

A:VM28C(FD45,FG45)

Item No	Part No.	Mark	Description	Req'd	Remarks : Serial No.
1	228C8-30011		MAST,OUTER VM250 アウタマスト	1	MAST NO.1-1675
-	228C8-30012		MAST,OUTER VM250 アウタマスト	1	MAST NO.1676-
-	228C8-30021		MAST,OUTER VM270 アウタマスト	1	MAST NO.1-1675
-	228C8-30022		MAST,OUTER VM270 アウタマスト	1	MAST NO.1676-
-	228C8-30031		MAST,OUTER VM275 アウタマスト	1	MAST NO.1-1675
-	228C8-30032		MAST,OUTER VM275 アウタマスト	1	MAST NO.1676-
-	228C8-30001		MAST,OUTER VM300 アウタマスト	1	MAST NO.1-1675
-	228C8-30002		MAST,OUTER VM300 アウタマスト	1	MAST NO.1676-
-	228C8-30041		MAST,OUTER VM325 アウタマスト	1	MAST NO.1-1675
-	228C8-30042		MAST,OUTER VM325 アウタマスト	1	MAST NO.1676-
-	228C8-30051		MAST,OUTER VM330 アウタマスト	1	MAST NO.1-1675
-	228C8-30052		MAST,OUTER VM330 アウタマスト	1	MAST NO.1676-
-	228C8-30061		MAST,OUTER VM350 アウタマスト	1	MAST NO.1-1675
-	228C8-30062		MAST,OUTER VM350 アウタマスト	1	MAST NO.1676-
-	228C8-30071		MAST,OUTER VM366 アウタマスト	1	MAST NO.1-1675
-	228C8-30072		MAST,OUTER VM366 アウタマスト	1	MAST NO.1676-
-	228C8-30081		MAST,OUTER VM370 アウタマスト	1	MAST NO.1-1675
-	228C8-30082		MAST,OUTER VM370 アウタマスト	1	MAST NO.1676-
-	228C8-30091		MAST,OUTER VM375 アウタマスト	1	MAST NO.1-1675
-	228C8-30092		MAST,OUTER VM375 アウタマスト	1	MAST NO.1676-
-	228C8-30101		MAST,OUTER VM400 アウタマスト	1	MAST NO.1-1675
-	228C8-30102		MAST,OUTER VM400 アウタマスト	1	MAST NO.1676-
-	228C8-30111		MAST,OUTER VM425 アウタマスト	1	MAST NO.1-1675
-	228C8-30112		MAST,OUTER VM425 アウタマスト	1	MAST NO.1676-
-	228C8-30121		MAST,OUTER VM450 アウタマスト	1	MAST NO.1-1675
-	228C8-30122		MAST,OUTER VM450 アウタマスト	1	MAST NO.1676-
-	228C8-30131		MAST,OUTER VM475 アウタマスト	1	MAST NO.1-1675
-	228C8-30132		MAST,OUTER VM475 アウタマスト	1	MAST NO.1676-
-	228C8-30141		MAST,OUTER VM500 アウタマスト	1	MAST NO.1-1675
-	228C8-30142		MAST,OUTER VM500 アウタマスト	1	MAST NO.1676-
-	228C8-30151		MAST,OUTER VM550 アウタマスト	1	MAST NO.1-1675
-	228C8-30152		MAST,OUTER VM550 アウタマスト	1	MAST NO.1676-
-	228C8-30161		MAST,OUTER VM600 アウタマスト	1	MAST NO.1-1675
-	228C8-30162		MAST,OUTER VM600 アウタマスト	1	MAST NO.1676-
-	528C3-86011		MAST,OUTER VM250 アウタマスト	1	MAST NO.1-1675 [RW][HC][EXR]
-	528C3-86012		MAST,OUTER VM250 アウタマスト	1	MAST NO.1676- [RW][HC][EXR]
-	528C3-86021		MAST,OUTER VM270 アウタマスト	1	MAST NO.1-1675 [RW][HC][EXR]
-	528C3-86022		MAST,OUTER VM270 アウタマスト	1	MAST NO.1676- [RW][HC][EXR]
-	528C3-86031		MAST,OUTER VM275 アウタマスト	1	MAST NO.1-1675 [RW][HC][EXR]
-	528C3-86032		MAST,OUTER VM275 アウタマスト	1	MAST NO.1676- [RW][HC][EXR]
-	528C3-86001		MAST,OUTER VM300 アウタマスト	1	MAST NO.1-1675 [RW][HC][EXR]
-	528C3-86002		MAST,OUTER VM300 アウタマスト	1	MAST NO.1676- [RW][HC][EXR]

FIG.163 MAST [VM28C]

(M4048330) マスト

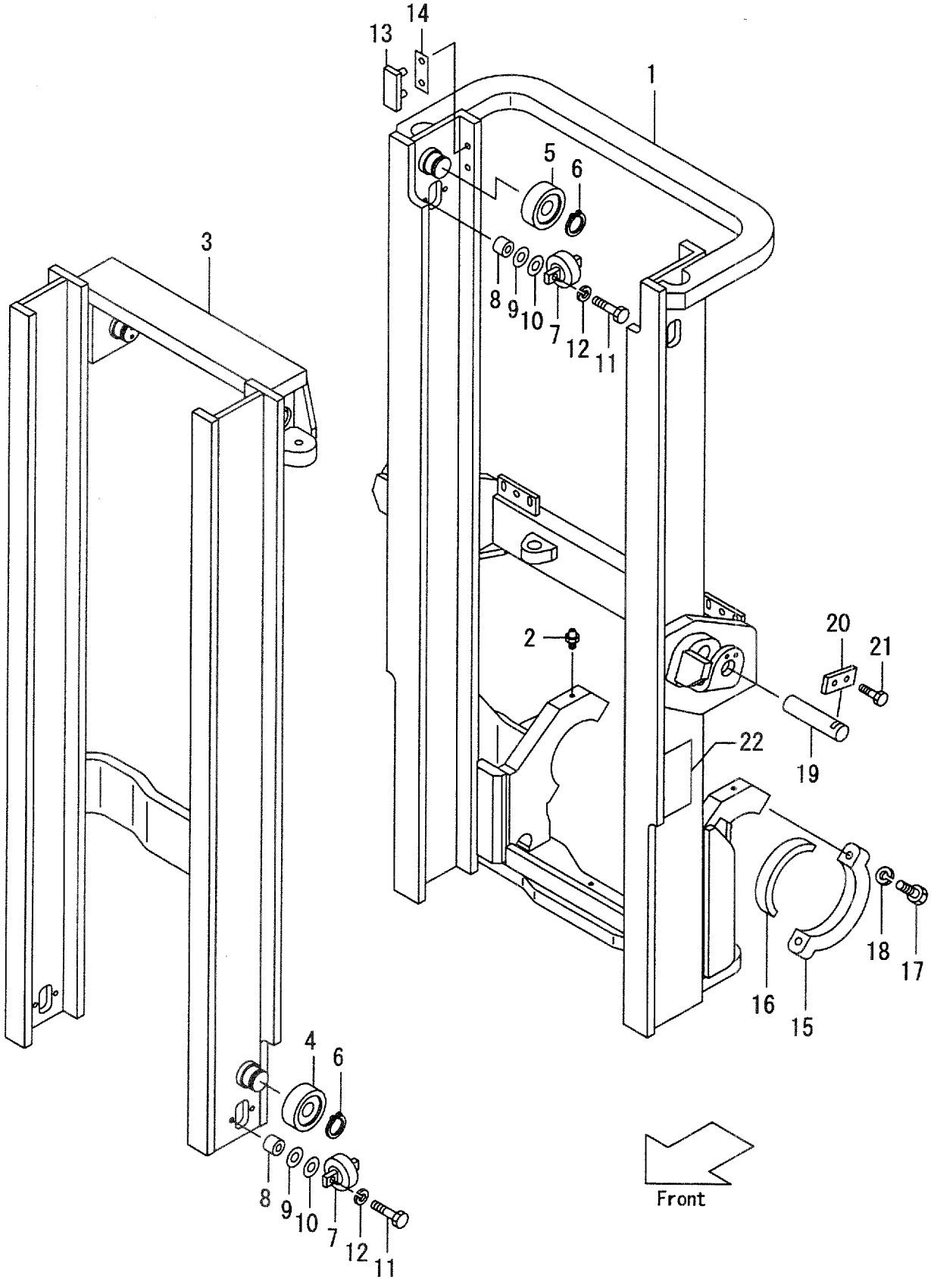

A:VM28C(FD45,FG45)

Item No	Part No.	Mark	Description	Req'd	Remarks : Serial No.
-	528C3-86041		MAST,OUTER VM325 アウタマスト	1	MAST NO.1-1675 [RW][HC][EXR]
-	528C3-86042		MAST,OUTER VM325 アウタマスト	1	MAST NO.1676- [RW][HC][EXR]
-	528C3-86051		MAST,OUTER VM330 アウタマスト	1	MAST NO.1-1675 [RW][HC][EXR]
-	528C3-86052		MAST,OUTER VM330 アウタマスト	1	MAST NO.1676- [RW][HC][EXR]
-	528C3-86061		MAST,OUTER VM350 アウタマスト	1	MAST NO.1-1675 [RW][HC][EXR]
-	528C3-86062		MAST,OUTER VM350 アウタマスト	1	MAST NO.1676- [RW][HC][EXR]
-	528C3-86071		MAST,OUTER VM366 アウタマスト	1	MAST NO.1-1675 [RW][HC][EXR]
-	528C3-86072		MAST,OUTER VM366 アウタマスト	1	MAST NO.1676- [RW][HC][EXR]
-	528C3-86081		MAST,OUTER VM370 アウタマスト	1	MAST NO.1-1675 [RW][HC][EXR]
-	528C3-86082		MAST,OUTER VM370 アウタマスト	1	MAST NO.1676- [RW][HC][EXR]
-	528C3-86091		MAST,OUTER VM375 アウタマスト	1	MAST NO.1-1675 [RW][HC][EXR]
-	528C3-86092		MAST,OUTER VM375 アウタマスト	1	MAST NO.1676- [RW][HC][EXR]
-	528C3-86101		MAST,OUTER VM400 アウタマスト	1	MAST NO.1-1675 [RW][HC][EXR]
-	528C3-86102		MAST,OUTER VM400 アウタマスト	1	MAST NO.1676- [RW][HC][EXR]
-	528C3-86111		MAST,OUTER VM425 アウタマスト	1	MAST NO.1-1675 [RW][HC][EXR]
-	528C3-86112		MAST,OUTER VM425 アウタマスト	1	MAST NO.1676- [RW][HC][EXR]
-	528C3-86121		MAST,OUTER VM450 アウタマスト	1	MAST NO.1-1675 [RW][HC][EXR]
-	528C3-86122		MAST,OUTER VM450 アウタマスト	1	MAST NO.1676- [RW][HC][EXR]
-	528C3-86131		MAST,OUTER VM475 アウタマスト	1	MAST NO.1-1675 [RW][HC][EXR]
-	528C3-86132		MAST,OUTER VM475 アウタマスト	1	MAST NO.1676- [RW][HC][EXR]
-	528C3-86141		MAST,OUTER VM500 アウタマスト	1	MAST NO.1-1675 [RW][HC][EXR]
-	528C3-86142		MAST,OUTER VM500 アウタマスト	1	MAST NO.1676- [RW][HC][EXR]
-	528C3-86151		MAST,OUTER VM550 アウタマスト	1	MAST NO.1-1675 [RW][HC][EXR]
-	528C3-86152		MAST,OUTER VM550 アウタマスト	1	MAST NO.1676- [RW][HC][EXR]
-	528C3-86161		MAST,OUTER VM600 アウタマスト	1	MAST NO.1-1675 [RW][HC][EXR]

FIG.163 MAST [VM28C]

(M4048330) マスト

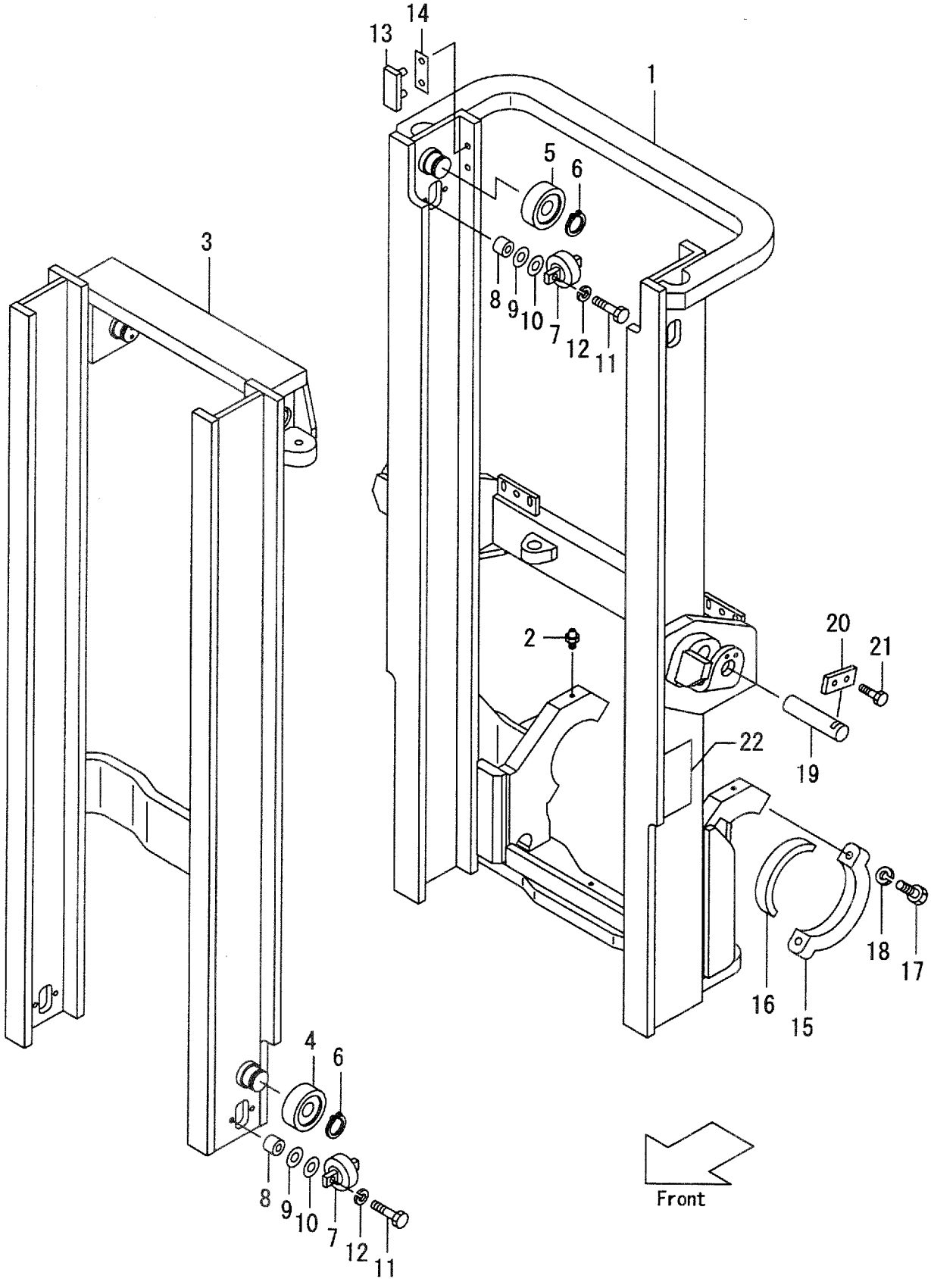

A:VM28C(FD45,FG45)

Item No	Part No.	Mark	Description		Req'd	Remarks : Serial No.
-	528C3-86162		MAST,OUTER VM600	アウタマスト	1	MAST NO.1676- [RW][HC][EXR]
2	04901-00160		FITTING	フィッティング	2	
3	228C8-30211		MAST,INNER VM250	インナマスト	1	MAST NO.1-1675
-	228C8-30212		MAST,INNER VM250	インナマスト	1	MAST NO.1676-
-	228C8-30221		MAST,INNER VM270	インナマスト	1	MAST NO.1-1675
-	228C8-30222		MAST,INNER VM270	インナマスト	1	MAST NO.1676-
-	228C8-30231		MAST,INNER VM275	インナマスト	1	MAST NO.1-1675
-	228C8-30232		MAST,INNER VM275	インナマスト	1	MAST NO.1676-
-	228C8-30201		MAST,INNER VM300	インナマスト	1	MAST NO.1-1675
-	228C8-30202		MAST,INNER VM300	インナマスト	1	MAST NO.1676-
-	228C8-30241		MAST,INNER VM325	インナマスト	1	MAST NO.1-1675
-	228C8-30242		MAST,INNER VM325	インナマスト	1	MAST NO.1676-
-	228C8-30251		MAST,INNER VM330	インナマスト	1	MAST NO.1-1675
-	228C8-30252		MAST,INNER VM330	インナマスト	1	MAST NO.1676-
-	228C8-30261		MAST,INNER VM350	インナマスト	1	MAST NO.1-1675
-	228C8-30262		MAST,INNER VM350	インナマスト	1	MAST NO.1676-
-	228C8-30271		MAST,INNER VM366	インナマスト	1	MAST NO.1-1675
-	228C8-30272		MAST,INNER VM366	インナマスト	1	MAST NO.1676-
-	228C8-30281		MAST,INNER VM370	インナマスト	1	MAST NO.1-1675
-	228C8-30282		MAST,INNER VM370	インナマスト	1	MAST NO.1676-
-	228C8-30291		MAST,INNER VM375	インナマスト	1	MAST NO.1-1675
-	228C8-30292		MAST,INNER VM375	インナマスト	1	MAST NO.1676-
-	228C8-30301		MAST,INNER VM400	インナマスト	1	MAST NO.1-1675
-	228C8-30302		MAST,INNER VM400	インナマスト	1	MAST NO.1676-
-	228C8-30311		MAST,INNER VM425	インナマスト	1	MAST NO.1-1675
-	228C8-30312		MAST,INNER VM425	インナマスト	1	MAST NO.1676-
-	228C8-30321		MAST,INNER VM450	インナマスト	1	MAST NO.1-1675
-	228C8-30322		MAST,INNER VM450	インナマスト	1	MAST NO.1676-
-	228C8-30331		MAST,INNER VM475	インナマスト	1	MAST NO.1-1675
-	228C8-30332		MAST,INNER VM475	インナマスト	1	MAST NO.1676-
-	228C8-30341		MAST,INNER VM500	インナマスト	1	MAST NO.1-1675
-	228C8-30342		MAST,INNER VM500	インナマスト	1	MAST NO.1676-
-	228C8-30351		MAST,INNER VM550	インナマスト	1	MAST NO.1-1675
-	228C8-30352		MAST,INNER VM550	インナマスト	1	MAST NO.1676-
-	228C8-30361		MAST,INNER VM600	インナマスト	1	MAST NO.1-1675
-	228C8-30362		MAST,INNER VM600	インナマスト	1	MAST NO.1676-
4	23818-20701		ROLLER,END,143.5	ローラ	2	
-	23958-22081		ROLLER,END,144.0	ローラ	(2)	
5	23818-20701		ROLLER,END,143.5	ローラ	2	
6	02100-00050		RING,SNAP	スナップリング	4	
7	23818-30301		ROLLER,SIDE	ローラ	4	
8	23818-30071		SPACER	スペーサ	8	MAST NO.1-1675
-	224T8-31111		SPACER	スペーサ	8	MAST NO.1676-
9	22548-34051		SHIM,T-0.5	シム	16	
10	22548-34061		SHIM,T-1.0	シム	8	
11	01100-12045		BOLT	ボルト	8	
12	02010-00012		WASHER	ワッシャ	8	
13	22678-32001		SLIPPER	スリッパ	2	
14	22679-43231		SHIM	シム	4	

FIG.163 MAST [VM28C]

(M4048330) マスト

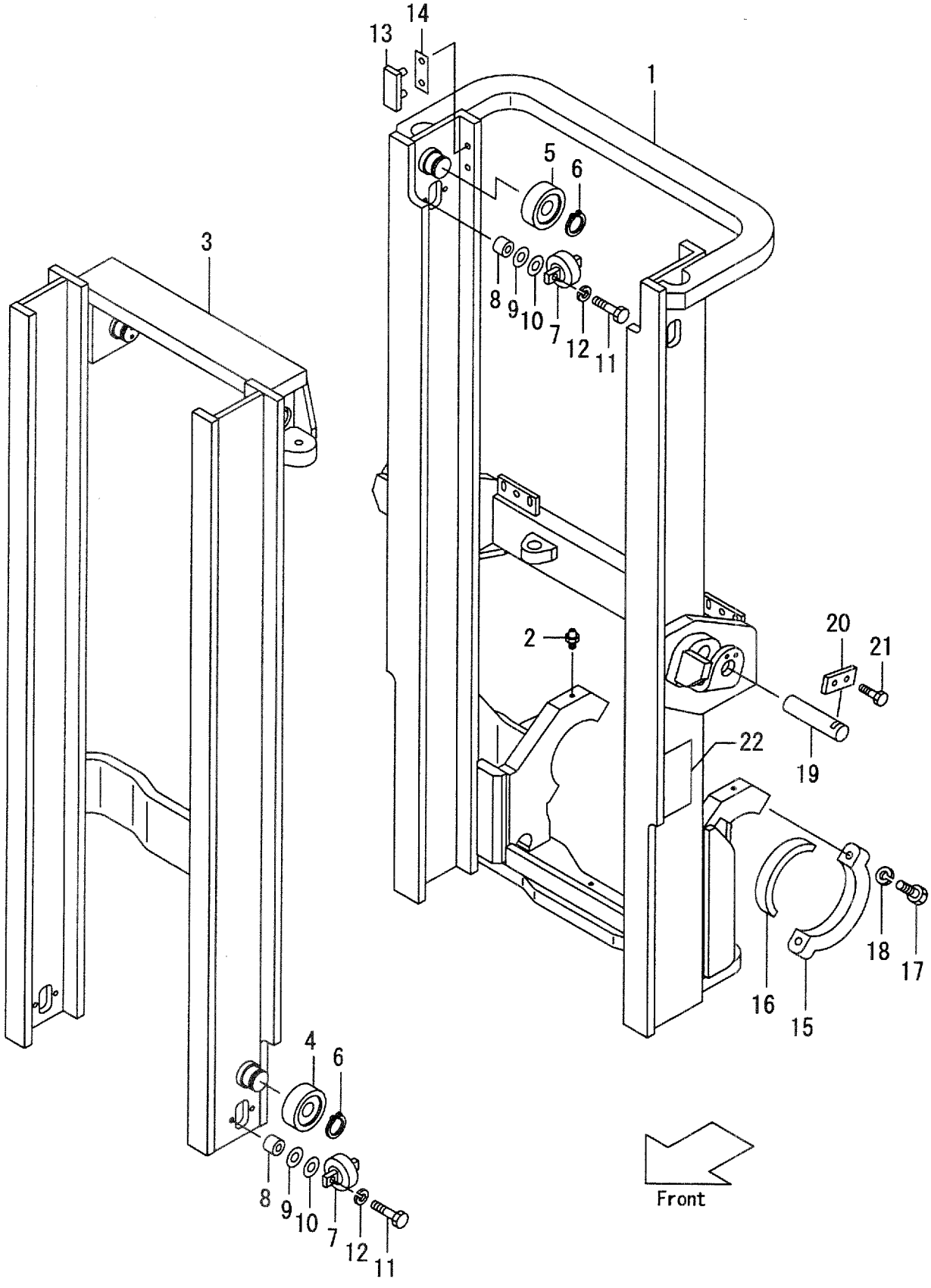

A:VM28C(FD45, FG45)

Item No	Part No.	Mark	Description		Req'd	Remarks : Serial No.
15	224T8-02201		CAP	ｷｬｯﾌﾟ	2	
16	224T8-02001		BUSHING	ﾌﾞｯｼﾝｸﾞ	2	
17	01103-20085		BOLT	ﾎﾞﾙﾄ	4	
18	02010-00020		WASHER	ﾜｯｼｬ	4	
19	224T8-52501		PIN	ﾋﾟﾝ	2	
20	23648-50161		PLATE	ﾌﾟﾚｰﾄ	2	
21	01184-10020		BOLT	ﾎﾞﾙﾄ	4	
22	23678-06002		PLATE,NAME	ﾌﾟﾚｰﾄ	1	

FIG.164 LAMP GUARD [(HL,HLG/HL,BKH)/VM28C]

(M4048390) ﾗﾝﾌﾟｶﾞｰﾄﾞ

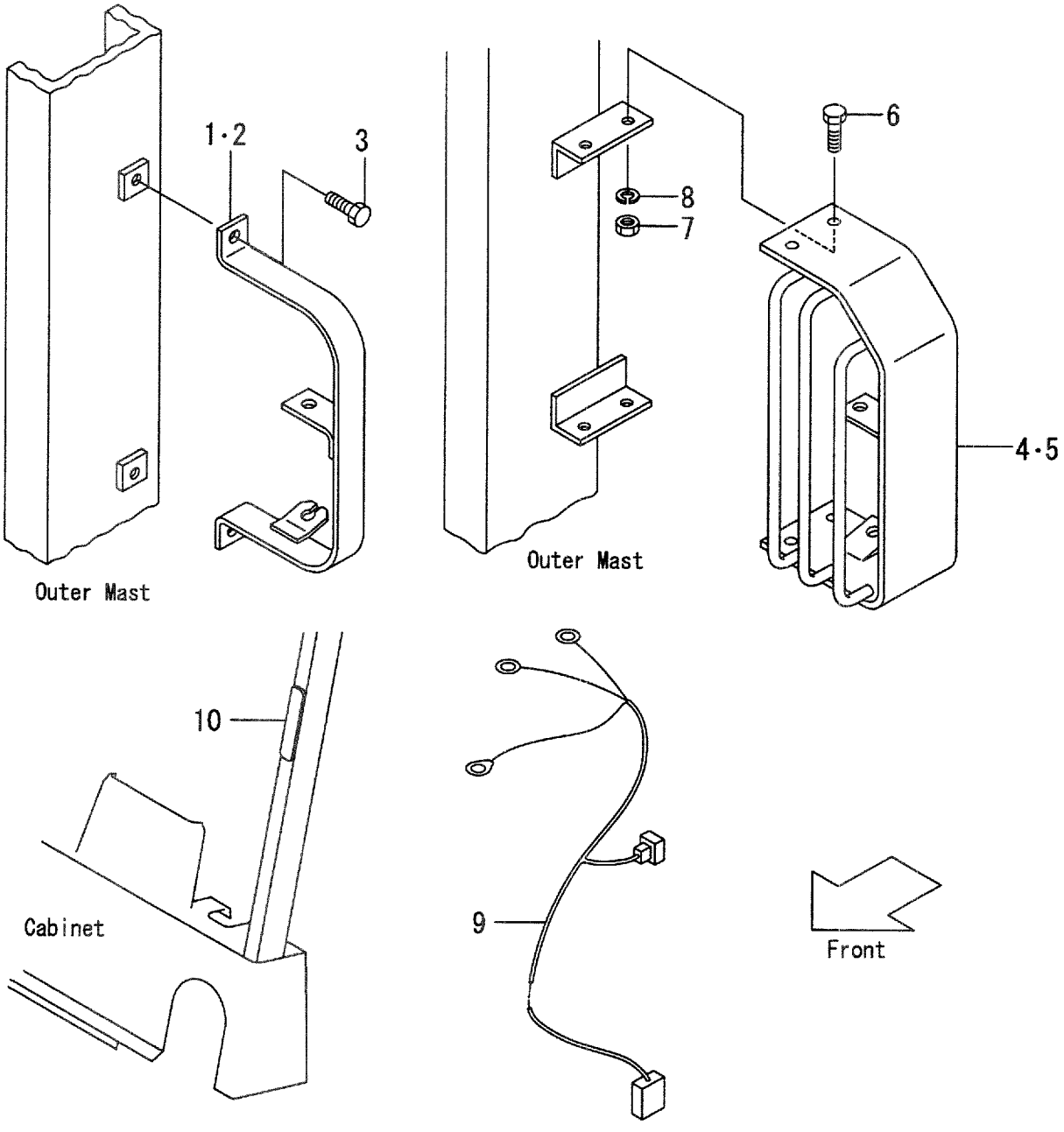

A:VM28C(FD45,FG45):1-1523

Item No	Part No.	Mark	Description		Req'd	Remarks : Serial No.
1	224W2-43001		BRACKET,LH	ﾌﾞﾗｹｯﾄ	1	[HL]
2	224W2-43011		BRACKET,RH	ﾌﾞﾗｹｯﾄ	1	[HL]
3	01184-12020		BOLT	ﾎﾞﾙﾄ	4	[HL]
4	224W2-43031		GUARD,HEAD-LAMP,LH	ｶﾞｰﾄﾞ	1	[HLG/HL][BKH]
5	224W2-43041		GUARD,HEAD-LAMP,RH	ｶﾞｰﾄﾞ	1	[HLG/HL][BKH]
6	01100-12030		BOLT	ﾎﾞﾙﾄ	8	[HLG/HL][BKH]
7	02010-00012		WASHER	ﾜｯｼｬ	8	[HLG/HL][BKH]
8	01400-00012		NUT	ﾅｯﾄ	8	[HLG/HL][BKH]
9	224W2-43081		WIRE-HARNESS	ﾜｲﾔﾊｰﾈｽ	2	[HL/VM250-275] [HGL/HL/VM250-275] [BKH/VM250-275]
-	224W2-43091		WIRE-HARNESS	ﾜｲﾔﾊｰﾈｽ	2	[HL/VM300-600] [HGL/HL/VM300-600] [BKH/VM300-600]
10	524W5-42061		BRACKET	ﾌﾞﾗｹｯﾄ	2	[HL][HLG/HL][BKH]

FIG.164A LAMP GUARD [(HL,BKH)/VM28C]

(M4048391) ﾗﾝﾌﾟｶﾞｰﾄﾞ

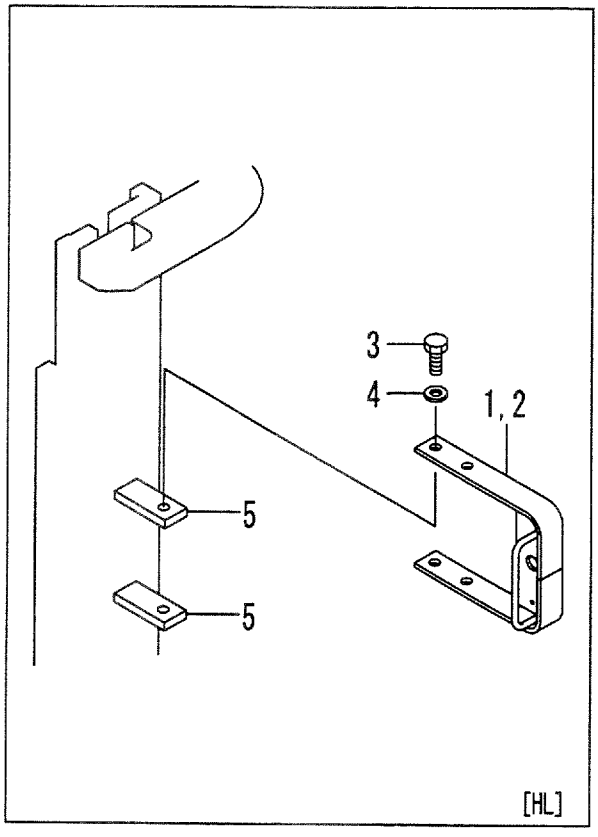

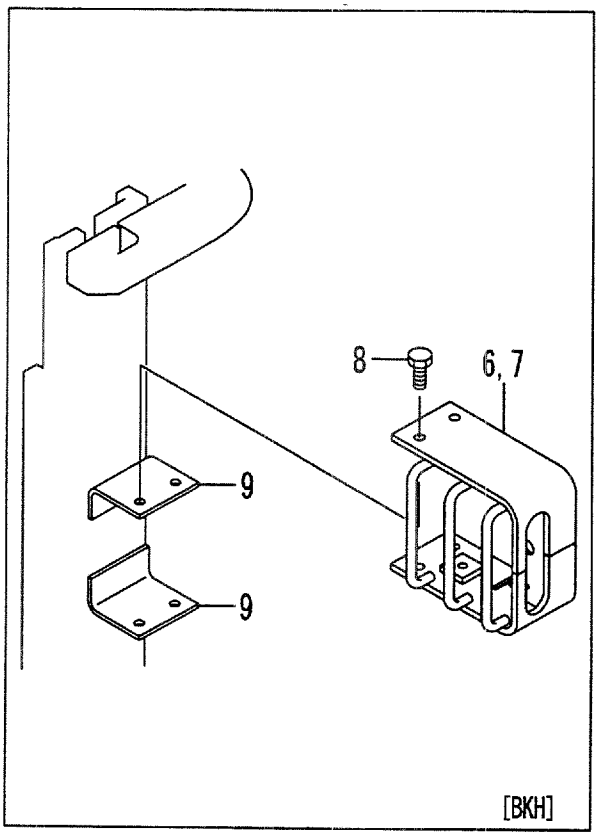

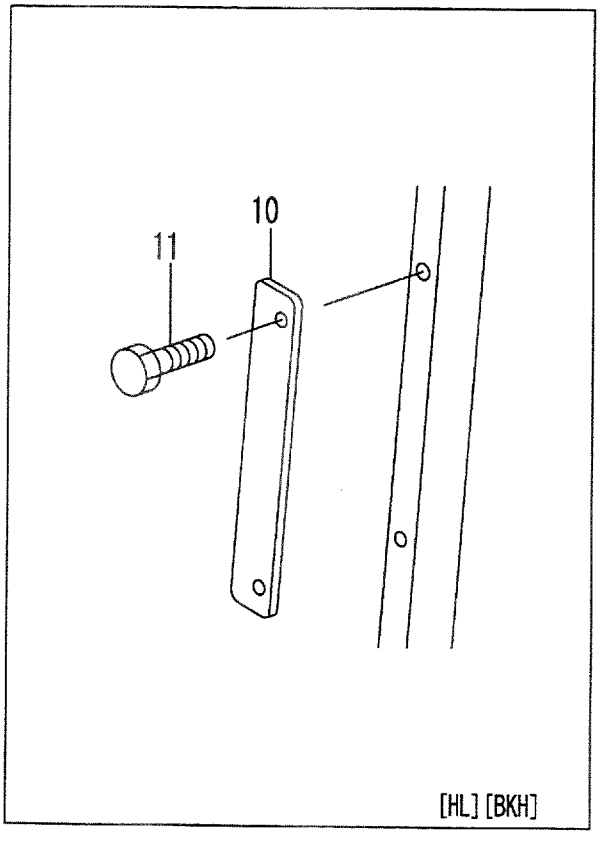

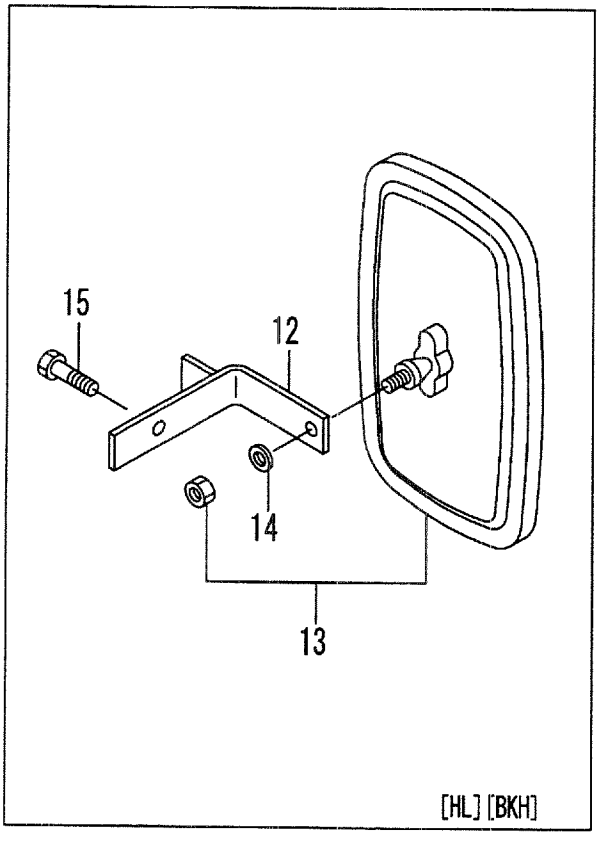

A:VM28C(FD45,FG45):1524-

Item No	Part No.	Mark	Description		Req'd	Remarks : Serial No.
1	534A9-22011		BRACKET,LH	ﾌﾞﾗｹｯﾄ	1	[HL]
2	534A9-22001		BRACKET,RH	ﾌﾞﾗｹｯﾄ	1	[HL]
3	01100-12020		BOLT	ﾎﾞﾙﾄ	4	[HL]
4	02010-00012		WASHER	ﾜｯｼｬ	4	[HL]
5	535C9-22111		BLOCK,TAPPED	ﾌﾞﾛｯｸ	4	[HL]
6	534A4-22011		GUARD,LH	ｶﾞｰﾄﾞ	1	[BKH]
7	534A4-22001		GUARD,RH	ｶﾞｰﾄﾞ	1	[BKH]
8	01184-12020		BOLT & WASHER	ﾎﾞﾙﾄ&ﾜｯｼｬ	8	[BKH]
9	535C9-22101		BRACKET	ﾌﾞﾗｹｯﾄ	4	[BKH]
10	534A9-22301		PLATE	ﾌﾟﾚｰﾄ	2	[HL][BKH]
11	01100-08012		BOLT	ﾎﾞﾙﾄ	4	[HL][BKH]
12	535C9-22401		BRACKET	ﾌﾞﾗｹｯﾄ	2	[HL][BKH]
13	239A9-92001		MIRROR	ﾐﾗｰ	2	[HL][BKH]
14	222A9-32011		WASHER	ﾜｯｼｬ	2	[HL][BKH]
15	514A5-12021		BOLT	ﾎﾞﾙﾄ	2	[HL][BKH]
16	535C9-22301	+	WIRE-HARNESS	ﾜｲﾔﾊｰﾈｽ	2	[HL][BKH]
17	27732-42221	+	CLAMP	ｸﾗﾝﾌﾟ	4	[HL][BKH]
18	04913-11380	+	BAND	ﾊﾞﾝﾄﾞ	6	[HL][BKH]

FIG.165 LIFT CYLINDER [VM28C]

(M4048430) リフトシリンダ

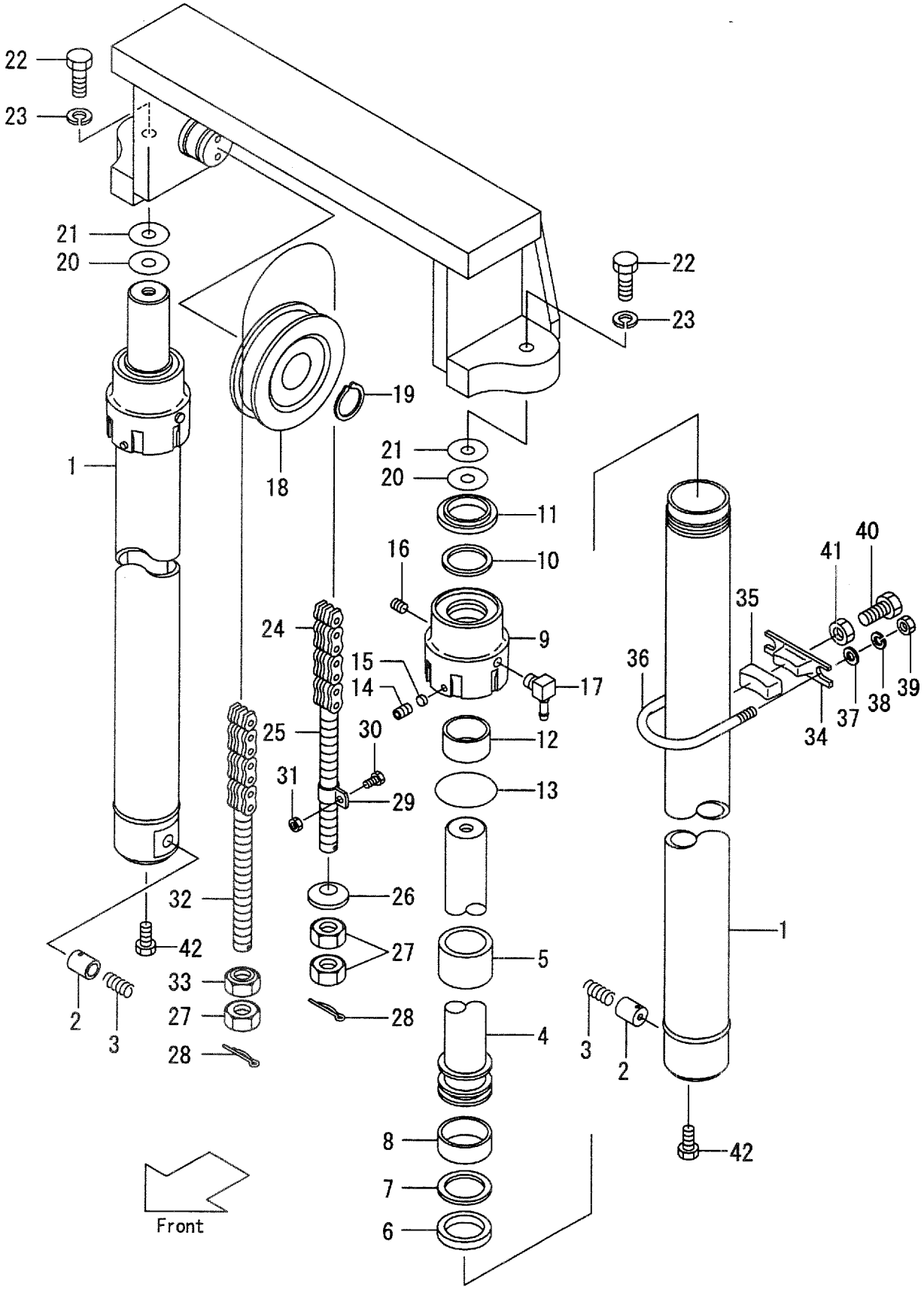

A:VM28C(FD45,FG45)

Item No	Part No.	Mark	Description		Req'd	Remarks : Serial No.
A1	228C8-40011		CYL-ASSY,LIFT VM250	ﾘﾌﾄｼﾘﾝﾀﾞｱｯｾﾝ	2	INC.1-17
-	228C8-40021		CYL-ASSY,LIFT VM270	ﾘﾌﾄｼﾘﾝﾀﾞｱｯｾﾝ	2	INC.1-17
-	228C8-40031		CYL-ASSY,LIFT VM275	ﾘﾌﾄｼﾘﾝﾀﾞｱｯｾﾝ	2	INC.1-17
-	228C8-40001		CYL-ASSY,LIFT VM300	ﾘﾌﾄｼﾘﾝﾀﾞｱｯｾﾝ	2	INC.1-17
-	228C8-40041		CYL-ASSY,LIFT VM325	ﾘﾌﾄｼﾘﾝﾀﾞｱｯｾﾝ	2	INC.1-17
-	228C8-40051		CYL-ASSY,LIFT VM330	ﾘﾌﾄｼﾘﾝﾀﾞｱｯｾﾝ	2	INC.1-17
-	228C8-40061		CYL-ASSY,LIFT VM350	ﾘﾌﾄｼﾘﾝﾀﾞｱｯｾﾝ	2	INC.1-17
-	228C8-40071		CYL-ASSY,LIFT VM366	ﾘﾌﾄｼﾘﾝﾀﾞｱｯｾﾝ	2	INC.1-17
-	228C8-40081		CYL-ASSY,LIFT VM370	ﾘﾌﾄｼﾘﾝﾀﾞｱｯｾﾝ	2	INC.1-17
-	228C8-40091		CYL-ASSY,LIFT VM375	ﾘﾌﾄｼﾘﾝﾀﾞｱｯｾﾝ	2	INC.1-17
-	228C8-40101		CYL-ASSY,LIFT VM400	ﾘﾌﾄｼﾘﾝﾀﾞｱｯｾﾝ	2	INC.1-17
-	228C8-40111		CYL-ASSY,LIFT VM425	ﾘﾌﾄｼﾘﾝﾀﾞｱｯｾﾝ	2	INC.1-17
-	228C8-40121		CYL-ASSY,LIFT VM450	ﾘﾌﾄｼﾘﾝﾀﾞｱｯｾﾝ	2	INC.1-17
-	228C8-40131		CYL-ASSY,LIFT VM475	ﾘﾌﾄｼﾘﾝﾀﾞｱｯｾﾝ	2	INC.1-17
-	228C8-40141		CYL-ASSY,LIFT VM500	ﾘﾌﾄｼﾘﾝﾀﾞｱｯｾﾝ	2	INC.1-17
-	228C8-40151		CYL-ASSY,LIFT VM550	ﾘﾌﾄｼﾘﾝﾀﾞｱｯｾﾝ	2	INC.1-17
-	228C8-40161		CYL-ASSY,LIFT VM600	ﾘﾌﾄｼﾘﾝﾀﾞｱｯｾﾝ	2	INC.1-17
1	228C8-40211		TUBE VM250	ﾁｭｰﾌﾞ	2	
-	228C8-40221		TUBE VM270	ﾁｭｰﾌﾞ	2	
-	228C8-40231		TUBE VM275	ﾁｭｰﾌﾞ	2	
-	228C8-40201		TUBE VM300	ﾁｭｰﾌﾞ	2	
-	228C8-40241		TUBE VM325	ﾁｭｰﾌﾞ	2	
-	228C8-40251		TUBE VM330	ﾁｭｰﾌﾞ	2	
-	228C8-40261		TUBE VM350	ﾁｭｰﾌﾞ	2	
-	228C8-40271		TUBE VM366	ﾁｭｰﾌﾞ	2	
-	228C8-40281		TUBE VM370	ﾁｭｰﾌﾞ	2	
-	228C8-40291		TUBE VM375	ﾁｭｰﾌﾞ	2	
-	228C8-40301		TUBE VM400	ﾁｭｰﾌﾞ	2	
-	228C8-40311		TUBE VM425	ﾁｭｰﾌﾞ	2	
-	228C8-40321		TUBE VM450	ﾁｭｰﾌﾞ	2	
-	228C8-40331		TUBE VM475	ﾁｭｰﾌﾞ	2	
-	228C8-40341		TUBE VM500	ﾁｭｰﾌﾞ	2	
-	228C8-40351		TUBE VM550	ﾁｭｰﾌﾞ	2	
-	228C8-40361		TUBE VM600	ﾁｭｰﾌﾞ	2	
2	228C8-42801		PISTON	ﾋﾟｽﾄﾝ	2	
3	25908-44281		SPRING	ｽﾌﾟﾘﾝｸﾞ	2	
4	228C8-40411		ROD,PISTON VM250	ﾛｯﾄﾞ	2	
-	228C8-40421		ROD,PISTON VM270	ﾛｯﾄﾞ	2	
-	228C8-40431		ROD,PISTON VM275	ﾛｯﾄﾞ	2	
-	228C8-40401		ROD,PISTON VM300	ﾛｯﾄﾞ	2	
-	228C8-40441		ROD,PISTON VM325	ﾛｯﾄﾞ	2	
-	228C8-40451		ROD,PISTON VM330	ﾛｯﾄﾞ	2	
-	228C8-40461		ROD,PISTON VM350	ﾛｯﾄﾞ	2	
-	228C8-40471		ROD,PISTON VM366	ﾛｯﾄﾞ	2	
-	228C8-40481		ROD,PISTON VM370	ﾛｯﾄﾞ	2	
-	228C8-40491		ROD,PISTON VM375	ﾛｯﾄﾞ	2	
-	228C8-40501		ROD,PISTON VM400	ﾛｯﾄﾞ	2	
-	228C8-40511		ROD,PISTON VM425	ﾛｯﾄﾞ	2	
-	228C8-40521		ROD,PISTON VM450	ﾛｯﾄﾞ	2	
-	228C8-40531		ROD,PISTON VM475	ﾛｯﾄﾞ	2	

FIG.165 LIFT CYLINDER [VM28C]

(M4048430) リフトシリンダ

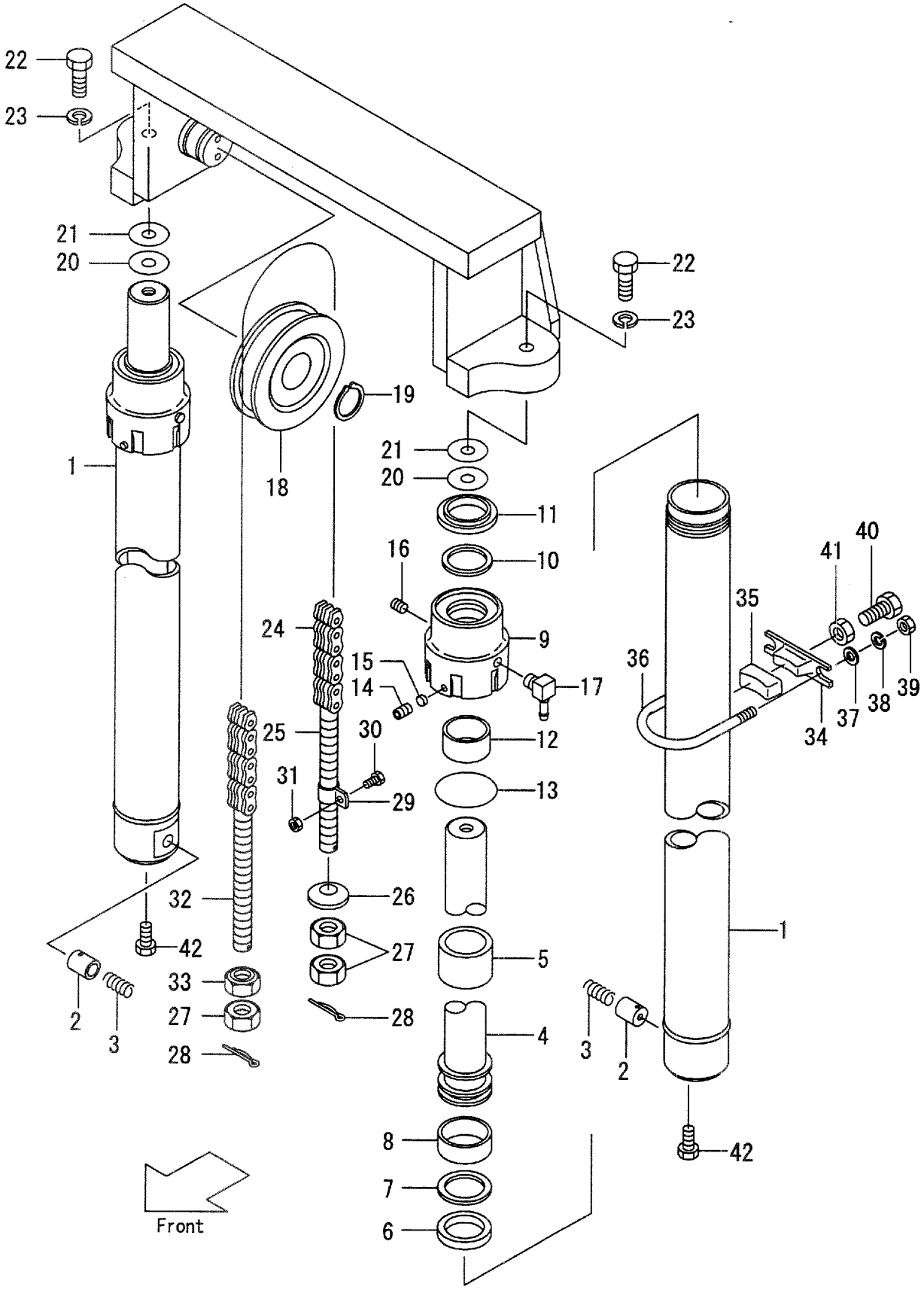

A:VM28C(FD45, FG45)

Item No	Part No.	Mark	Description		Req'd	Remarks : Serial No.
-	228C8-40541		ROD,PISTON VM500	ﾛｯﾄﾞ	2	
-	228C8-40551		ROD,PISTON VM550	ﾛｯﾄﾞ	2	
-	228C8-40561		ROD,PISTON VM600	ﾛｯﾄﾞ	2	
5	224T8-42471		SPACER	ｽﾍﾟｰｻ	2	(VM400-500)
-	224T8-42481		SPACER	ｽﾍﾟｰｻ	2	(VM550-600)
6	22580-82471	*	PACKING	ﾊﾟｯｷﾝｸﾞ	2	
7	228C8-42541	*	RING,BACK-UP	ﾘﾝｸﾞ	2	
8	22580-82461	*	WEARING	ｳｴｱﾘﾝｸﾞ	2	
9	228C8-42401		CAP	ｷｬｯﾌﾟ	2	
10	224T8-46011	*	PACKING	ﾊﾟｯｷﾝｸﾞ	2	
11	224T8-46001		SEAL,DUST	ｼｰﾙ	2	
12	23460-53171		BUSHING	ﾌﾞｯｼﾝｸﾞ	2	
13	03340-00130	*	O-RING	Oﾘﾝｸﾞ	2	
14	25908-44101		PLUG	ﾌﾟﾗｸﾞ	2	
15	25908-44111		PLUG,NYLON	ﾌﾟﾗｸﾞ	2	
16	24329-45541		PLUG	ﾌﾟﾗｸﾞ	2	
17	24329-45531		ELBOW	ｴﾙﾎﾞ	2	
18	24609-41241		SHEAVE	ｼｰﾌﾞ	2	
19	02100-00050		RING,SNAP	ｽﾅｯﾌﾟﾘﾝｸﾞ	2	
20	24319-45781		SHIM,T-0.2	ｼﾑ	4	
21	24319-45791		SHIM,T-1.0	ｼﾑ	2	
22	01103-16045		BOLT	ﾎﾞﾙﾄ	2	
23	02011-00016		WASHER	ﾜｯｼｬ	2	
24	23918-45951		CHAIN,LEAF VM250	ﾁｪｰﾝ	2	
-	23918-46031		CHAIN,LEAF VM270	ﾁｪｰﾝ	2	
-	23918-46051		CHAIN,LEAF VM275	ﾁｪｰﾝ	2	
-	23918-46151		CHAIN,LEAF VM300	ﾁｪｰﾝ	2	
-	23918-46251		CHAIN,LEAF VM325	ﾁｪｰﾝ	2	
-	23918-46271		CHAIN,LEAF VM330	ﾁｪｰﾝ	2	
-	23918-46351		CHAIN,LEAF VM350	ﾁｪｰﾝ	2	
-	23918-46411		CHAIN,LEAF VM366	ﾁｪｰﾝ	2	
-	23918-46431		CHAIN,LEAF VM370	ﾁｪｰﾝ	2	
-	23918-46451		CHAIN,LEAF VM375	ﾁｪｰﾝ	2	
-	23918-46171		CHAIN,LEAF VM400	ﾁｪｰﾝ	2	
-	23918-46211		CHAIN,LEAF VM425	ﾁｪｰﾝ	2	
-	23918-46271		CHAIN,LEAF VM450	ﾁｪｰﾝ	2	
-	23918-46371		CHAIN,LEAF VM475	ﾁｪｰﾝ	2	
-	23918-46471		CHAIN,LEAF VM500	ﾁｪｰﾝ	2	
-	23918-46491		CHAIN,LEAF VM550	ﾁｪｰﾝ	2	
-	23918-46571		CHAIN,LEAF VM600	ﾁｪｰﾝ	2	
25	24329-45441		PIN	ﾋﾟﾝ	2	
26	24319-45751		CORN	ｺｰﾝ	2	
27	01402-00022		NUT	ﾅｯﾄ	6	
28	02200-03040		PIN,COTTER	ﾋﾟﾝ	4	
29	224T8-42621		CLIP	ｸﾘｯﾌﾟ	2	
30	01183-06016		BOLT	ﾎﾞﾙﾄ	2	
31	01400-00006		NUT	ﾅｯﾄ	2	
32	23918-42681		PIN,ANCHOR	ﾋﾟﾝ	2	
33	23818-30271		NUT	ﾅｯﾄ	2	
34	224T8-42711		SUPPORT	ｻﾎﾟｰﾄ	2	(VM250-550)

FIG.165 LIFT CYLINDER [VM28C]

(M4048430) リフトシリンダ

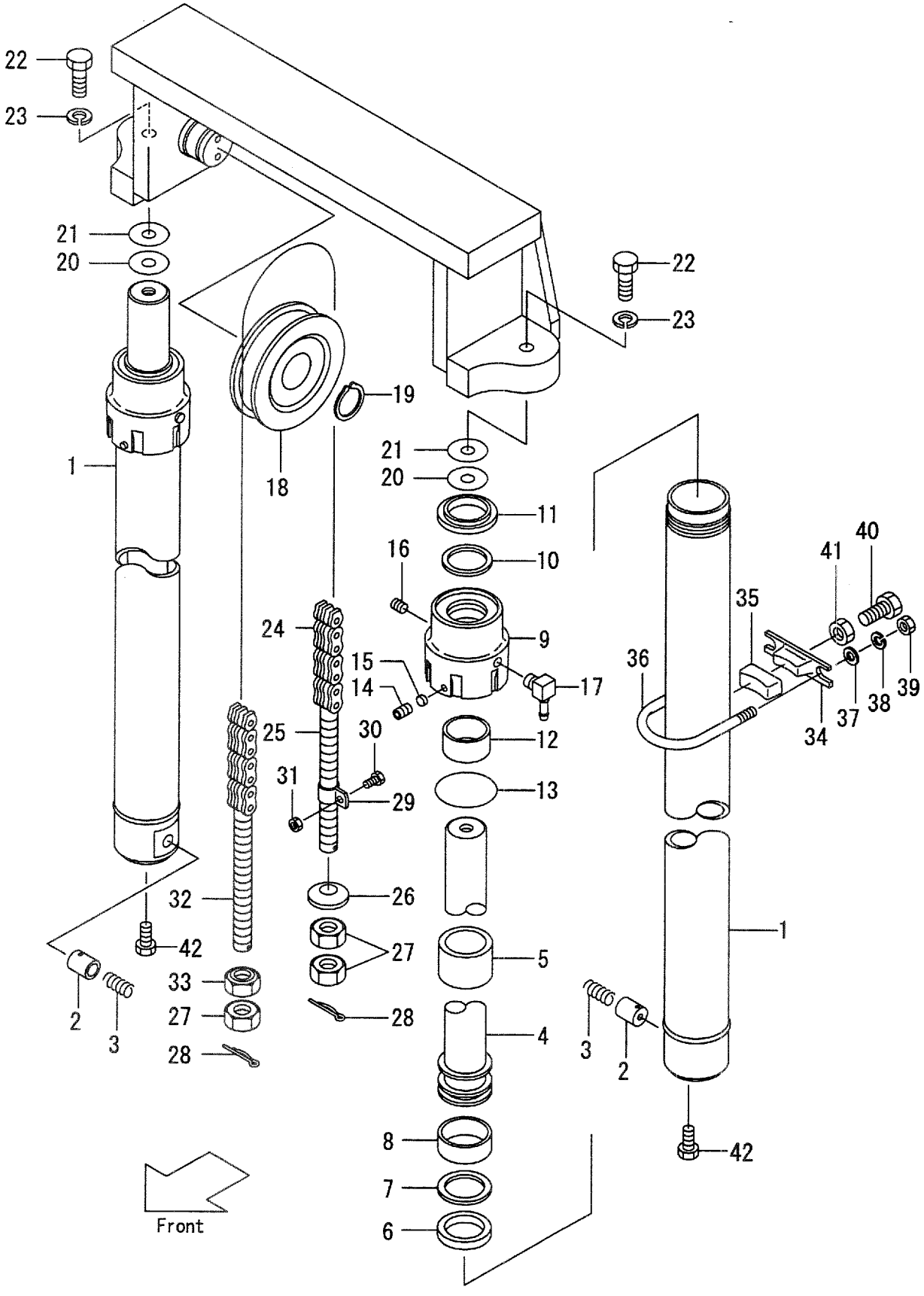

A:VM28C(FD45,FG45)

Item No	Part No.	Mark	Description		Req'd	Remarks : Serial No.
-	224T8-42711		SUPPORT	ｻﾎﾟｰﾄ	4	(VM600)
35	214A8-42631		RUBBER	ﾗﾊﾞｰ	2	(VM250-550)
-	214A8-42631		RUBBER	ﾗﾊﾞｰ	4	(VM600)
36	228C8-42701		U-BOLT	Uﾎﾞﾙﾄ	2	(VM250-550)
-	228C8-42701		U-BOLT	Uﾎﾞﾙﾄ	4	(VM600)
37	02000-00010		WASHER	ﾜｯｼｬ	4	(VM250-550)
-	02000-00010		WASHER	ﾜｯｼｬ	8	(VM600)
38	02010-00010		WASHER	ﾜｯｼｬ	4	(VM250-550)
-	02010-00010		WASHER	ﾜｯｼｬ	8	(VM600)
39	01400-00010		NUT	ﾅｯﾄ	4	(VM250-550)
-	01400-00010		NUT	ﾅｯﾄ	8	(VM600)
40	01120-16040		BOLT	ﾎﾞﾙﾄ	2	(VM250-550)
-	01120-16040		BOLT	ﾎﾞﾙﾄ	4	(VM600)
41	01402-00016		NUT	ﾅｯﾄ	2	(VM250-550)
-	01402-00016		NUT	ﾅｯﾄ	4	(VM600)
42	214A0-82831		BOLT	ﾎﾞﾙﾄ	2	
K1	228C8-49803		KIT,OVERHAUL	ｵｰﾊﾞｰﾎｰﾙｷｯﾄ	2	INC.6-8,10,11,13

FIG.166 MAST PIPING [VM28C]

(M4048480) マストパイピング

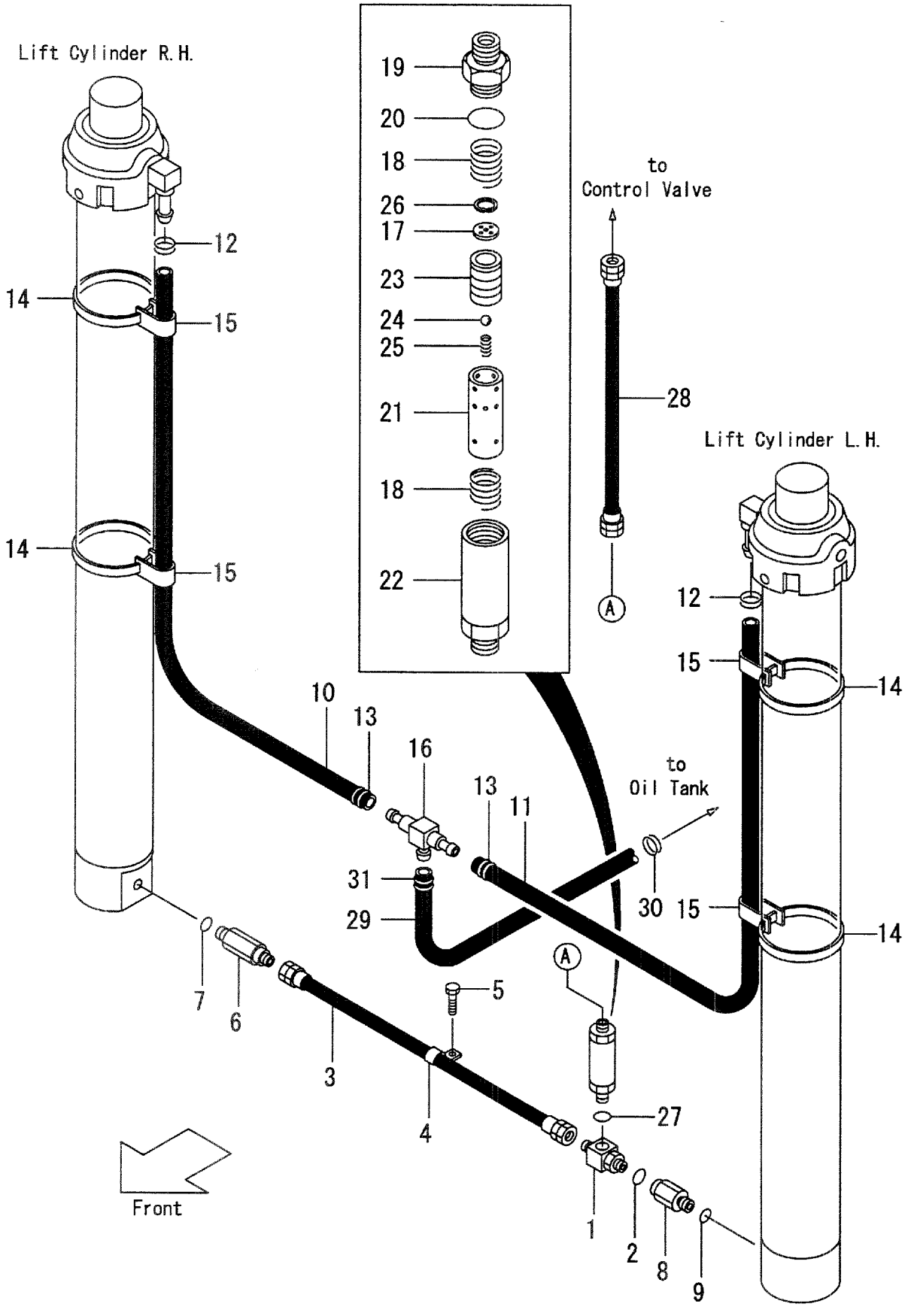

A:VM28C(FD45,FG45)

Item No	Part No.	Mark	Description		Req'd	Remarks : Serial No.
A1	24609-43682		THREE-WAY-ASSY	ｽﾘｰｳｪｲｱｯｾﾝ	1	INC.1,2
1	NO PART NO.	#	THREE-WAY	ｽﾘｰｳｴｲ	1	
2	03320-00180		O-RING	Oﾘﾝｸﾞ	1	
3	224T8-42861		HOSE,HP	ﾎｰｽ	1	
4	214A8-43081		CLIP	ｸﾘｯﾌﾟ	1	
5	01184-10020		BOLT	ﾎﾞﾙﾄ	1	
A2	224T8-44001		NIPPLE-ASSY	ﾆｯﾌﾟﾙｱｯｾﾝ	1	INC.6,7
6	NO PART NO.	#	NIPPLE	ﾆｯﾌﾟﾙ	1	
7	03320-00240		O-RING	Oﾘﾝｸﾞ	1	
A3	224T8-44021		NIPPLE-ASSY	ﾆｯﾌﾟﾙｱｯｾﾝ	1	INC.8,9
8	NO PART NO.	#	NIPPLE	ﾆｯﾌﾟﾙ	1	
9	03320-00240		O-RING	Oﾘﾝｸﾞ	1	
10	24328-40080		HOSE,RH VM250	ﾎｰｽ	1	
-	24328-40090		HOSE,RH VM270	ﾎｰｽ	1	
-	24328-40095		HOSE,RH VM275	ﾎｰｽ	1	
-	24328-40105		HOSE,RH VM300	ﾎｰｽ	1	
-	24328-40120		HOSE,RH VM325	ﾎｰｽ	1	
-	24328-40120		HOSE,RH VM330	ﾎｰｽ	1	
-	24328-40130		HOSE,RH VM350	ﾎｰｽ	1	
-	24328-40140		HOSE,RH VM366	ﾎｰｽ	1	
-	24328-40140		HOSE,RH VM370	ﾎｰｽ	1	
-	24328-40145		HOSE,RH VM375	ﾎｰｽ	1	
-	24328-40160		HOSE,RH VM400	ﾎｰｽ	1	
-	24328-40175		HOSE,RH VM425	ﾎｰｽ	1	
-	24328-40185		HOSE,RH VM450	ﾎｰｽ	1	
-	24328-40200		HOSE,RH VM475	ﾎｰｽ	1	
-	24328-40210		HOSE,RH VM500	ﾎｰｽ	1	
-	24328-40240		HOSE,RH VM550	ﾎｰｽ	1	
-	24328-40265		HOSE,RH VM600	ﾎｰｽ	1	
11	24328-40130		HOSE,LH VM250	ﾎｰｽ	1	
-	24328-40140		HOSE,LH VM270	ﾎｰｽ	1	
-	24328-40145		HOSE,LH VM275	ﾎｰｽ	1	
-	24328-40155		HOSE,LH VM300	ﾎｰｽ	1	
-	24328-40170		HOSE,LH VM325	ﾎｰｽ	1	
-	24328-40170		HOSE,LH VM330	ﾎｰｽ	1	
-	24328-40180		HOSE,LH VM350	ﾎｰｽ	1	
-	24328-40190		HOSE,LH VM366	ﾎｰｽ	1	
-	24328-40190		HOSE,LH VM370	ﾎｰｽ	1	
-	24328-40195		HOSE,LH VM375	ﾎｰｽ	1	
-	24328-40210		HOSE,LH VM400	ﾎｰｽ	1	
-	24328-40225		HOSE,LH VM425	ﾎｰｽ	1	
-	24328-40235		HOSE,LH VM450	ﾎｰｽ	1	
-	24328-40250		HOSE,LH VM475	ﾎｰｽ	1	
-	24328-40260		HOSE,LH VM500	ﾎｰｽ	1	
-	24328-40290		HOSE,LH VM550	ﾎｰｽ	1	
-	24328-40315		HOSE,LH VM600	ﾎｰｽ	1	
12	04911-00022		CLIP	ｸﾘｯﾌﾟ	2	
13	24329-46201		CLIP	ｸﾘｯﾌﾟ	2	
14	23678-42411		BAND	ﾊﾞﾝﾄﾞ	4	
15	53675-54101		BAND	ﾊﾞﾝﾄﾞ	4	

FIG.166 MAST PIPING [VM28C]

(M4048480) マストパイピング

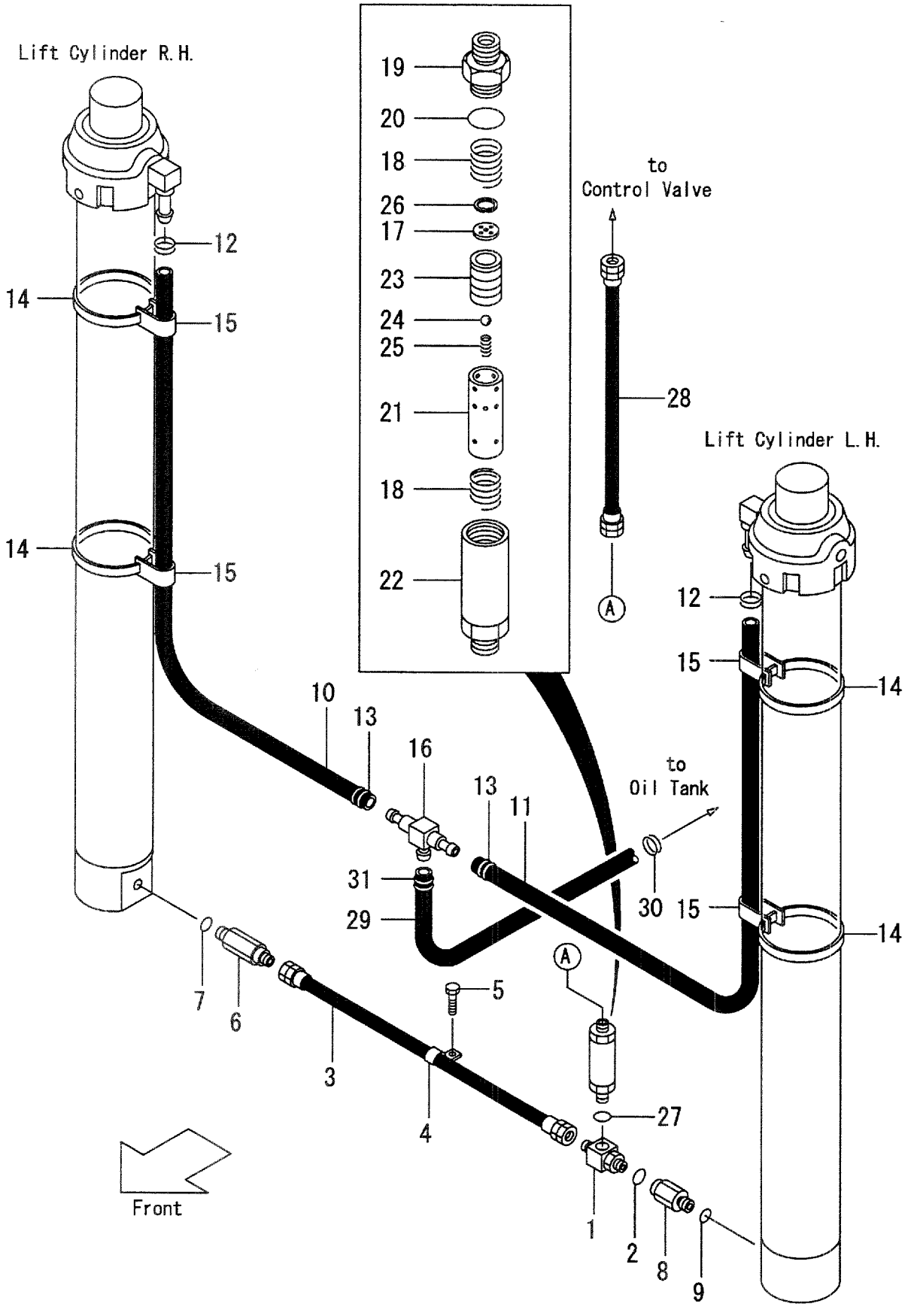

A:VM28C(FD45,FG45)

Item No	Part No.	Mark	Description		Req'd	Remarks : Serial No.
16	24329-46052		THREE-WAY	ｽﾘｰｳｴｲ	1	
A4	228C8-41002		REGULATOR-ASSY,FLOW	ﾚｷﾞｭﾚｰﾀｱｯｾﾝ	1	INC.17-26
17	NO PART NO.	#	PLATE,ORIFICE	ﾌﾟﾚｰﾄ	1	
18	24609-43631		SPRING	ｽﾌﾟﾘﾝｸﾞ	2	
19	NO PART NO.	#	NIPPLE	ﾆｯﾌﾟﾙ	1	
20	03300-00360		O-RING	Oﾘﾝｸﾞ	1	(OLD PART)
-	03320-00360		O-RING	Oﾘﾝｸﾞ	1	(NEW PART)
21	NO PART NO.	#	SLEEVE	ｽﾘｰﾌﾞ	1	
22	NO PART NO.	#	CASE	ｹｰｽ	1	
23	NO PART NO.	#	PISTON	ﾋﾟｽﾄﾝ	1	
24	24459-42951		BALL	ﾎﾞｰﾙ	1	
25	214A8-44151		SPRING	ｽﾌﾟﾘﾝｸﾞ	1	
26	02110-00020		RING,SNAP	ｽﾅｯﾌﾟﾘﾝｸﾞ	1	
27	03320-00240		O-RING	Oﾘﾝｸﾞ	1	
28	224T8-02101		HOSE,HP	ﾎｰｽ	1	
29	04710-06113		HOSE,LP	ﾎｰｽ	1	
30	04911-00032		CLIP	ｸﾘｯﾌﾟ	1	
31	24329-46211		CLIP	ｸﾘｯﾌﾟ	1	

FIG.167 FORK & LIFT BRACKET [VM28E]

(M4048240) フォーク&リフトブラケット

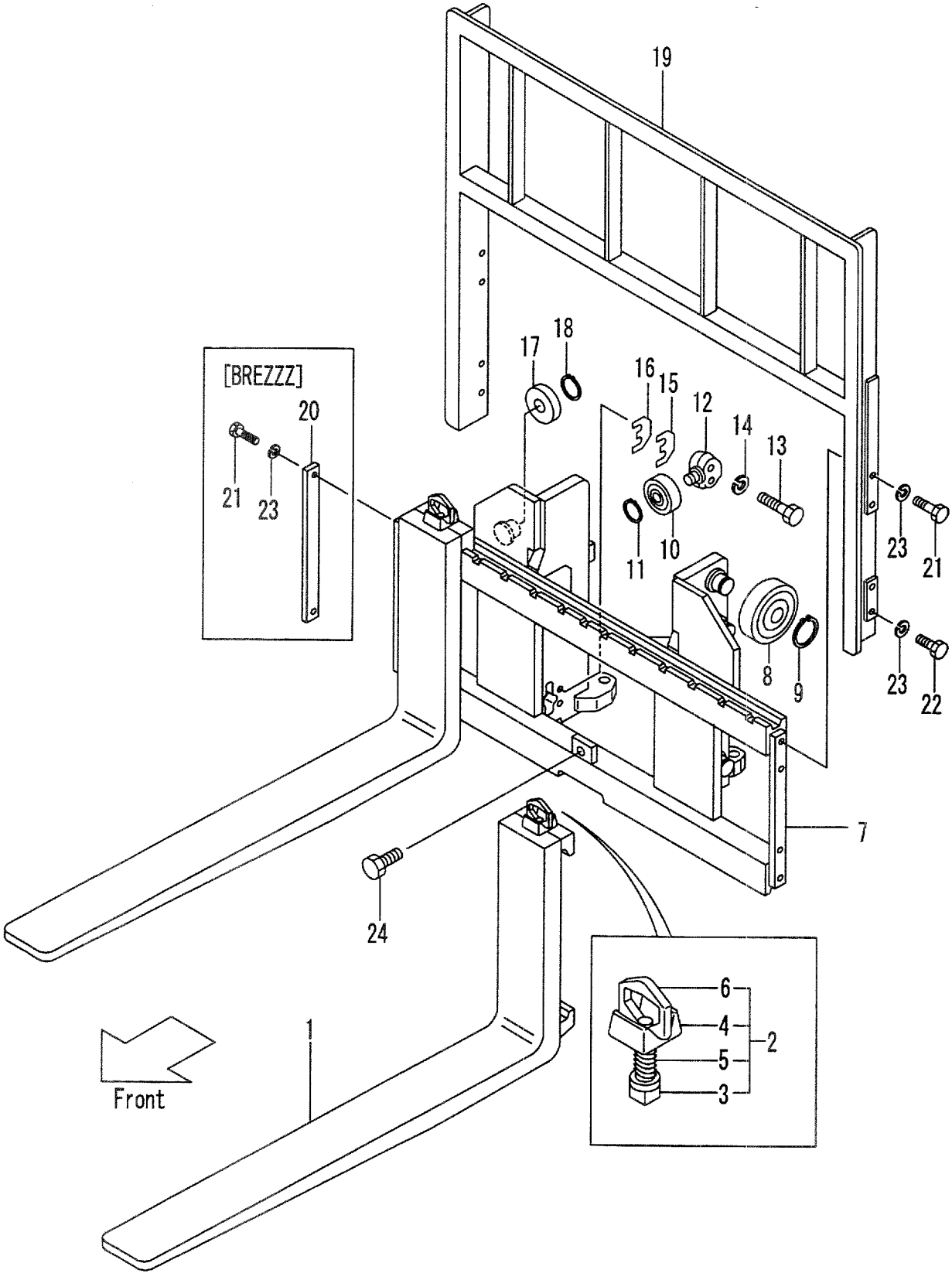

A:VM28E(FD45,FG45)

Item No	Part No.	Mark	Description	Req'd	Remarks : Serial No.
1	228A8-10613		FORK フォーク	2	MAST NO.1-1151 (L=1070) INC.3-6
-	228A8-10614		FORK フォーク	2	MAST NO.1152- (L=1070) INC.3-6
-	228A8-10603		FORK フォーク	2	MAST NO.1-1151 [LF100] INC.3-6
-	228A8-10604		FORK フォーク	2	MAST NO.1152- [LF100] INC.3-6
-	228A8-10613		FORK フォーク	2	MAST NO.1-1151 [LF107] INC.3-6
-	228A8-10614		FORK フォーク	2	MAST NO.1152- [LF107] INC.3-6
-	228A8-10623		FORK フォーク	2	MAST NO.1-1151 [LF110] INC.3-6
-	228A8-10624		FORK フォーク	2	MAST NO.1152- [LF110] INC.3-6
-	228A8-10633		FORK フォーク	2	MAST NO.1-1151 [LF120] INC.3-6
-	228A8-10634		FORK フォーク	2	MAST NO.1152- [LF120] INC.3-6
-	228A8-10643		FORK フォーク	2	MAST NO.1-1151 [LF122] INC.3-6
-	228A8-10644		FORK フォーク	2	MAST NO.1152- [LF122] INC.3-6
-	228A8-10743		FORK フォーク	2	MAST NO.1-1151 [LF130] INC.3-6
-	228A8-10744		FORK フォーク	2	MAST NO.1152- [LF130] INC.3-6
-	228A8-10653		FORK フォーク	2	MAST NO.1-1151 [LF137] INC.3-6
-	228A8-10654		FORK フォーク	2	MAST NO.1152- [LF137] INC.3-6
-	228A8-10753		FORK フォーク	2	MAST NO.1-1151 [LF140] INC.3-6
-	228A8-10754		FORK フォーク	2	MAST NO.1152- [LF140] INC.3-6
-	228A8-10763		FORK フォーク	2	MAST NO.1-1151 [LF150] INC.3-6
-	228A8-10764		FORK フォーク	2	MAST NO.1152- [LF150] INC.3-6
-	228A8-10663		FORK フォーク	2	MAST NO.1-1151 [LF152] INC.3-6
-	228A8-10664		FORK フォーク	2	MAST NO.1152- [LF152] INC.3-6
-	228A8-10773		FORK フォーク	2	MAST NO.1-1151 [LF160] INC.3-6
-	228A8-10774		FORK フォーク	2	MAST NO.1152- [LF160] INC.3-6
-	228A8-10673		FORK フォーク	2	MAST NO.1-1151 [LF167] INC.3-6

FIG.167 FORK & LIFT BRACKET [VM28E]

(M4048240) フォーク&リフトブラケット

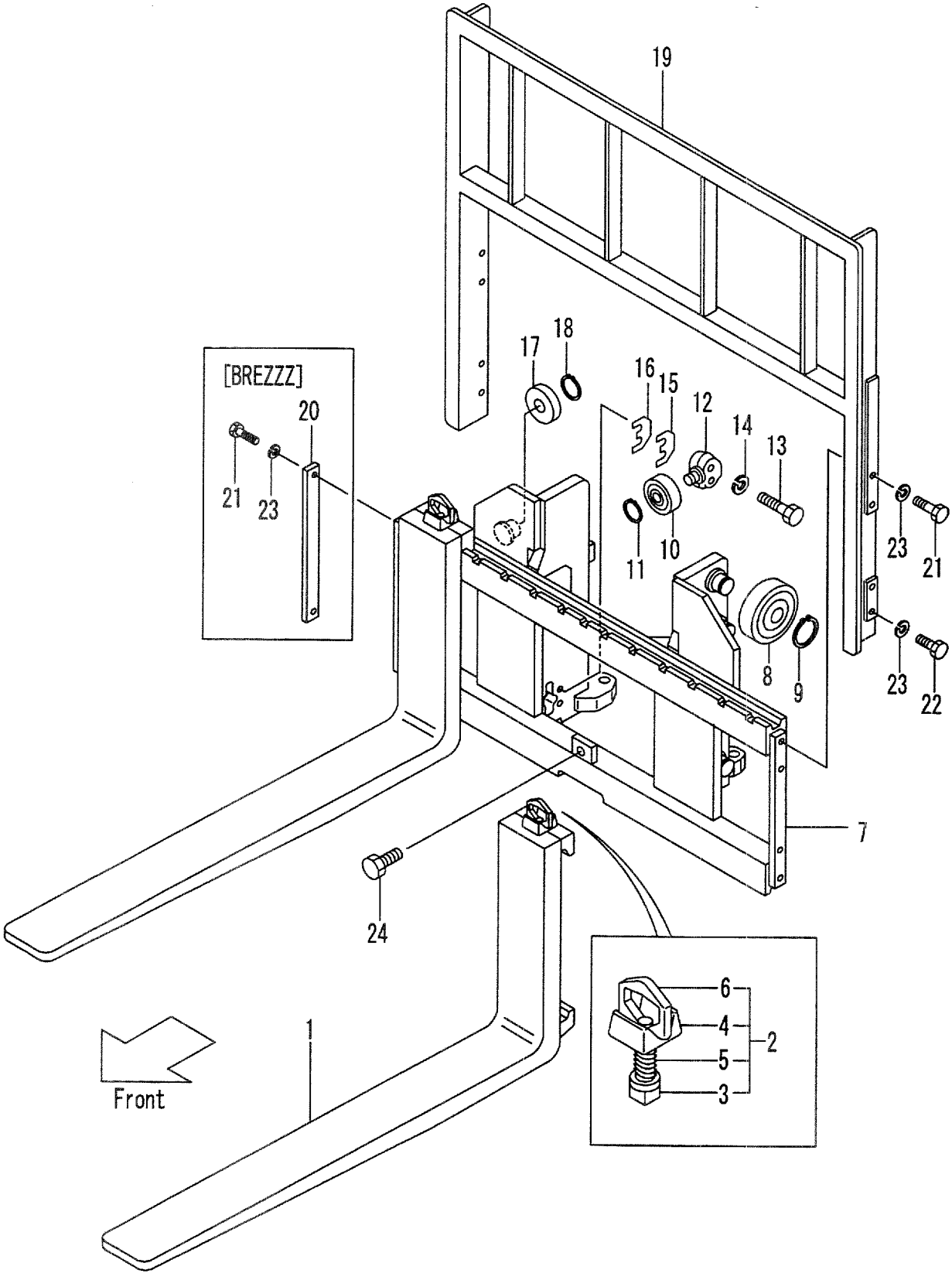

A:VM28E(FD45,FG45)

Item No	Part No.	Mark	Description		Req'd	Remarks : Serial No.
-	228A8-10674		FORK	ﾌｫｰｸ	2	MAST NO.1152- [LF167] INC.3-6
-	228A8-10783		FORK	ﾌｫｰｸ	2	MAST NO.1-1151 [LF170] INC.3-6
-	228A8-10784		FORK	ﾌｫｰｸ	2	MAST NO.1152- [LF170] INC.3-6
-	228A8-10793		FORK	ﾌｫｰｸ	2	MAST NO.1-1151 [LF180] INC.3-6
-	228A8-10794		FORK	ﾌｫｰｸ	2	MAST NO.1152- [LF180] INC.3-6
-	228A8-10683		FORK	ﾌｫｰｸ	2	MAST NO.1-1151 [LF182] INC.3-6
-	228A8-10684		FORK	ﾌｫｰｸ	2	MAST NO.1152- [LF182] INC.3-6
-	228A8-10803		FORK	ﾌｫｰｸ	2	MAST NO.1-1151 [LF190] INC.3-6
-	228A8-10804		FORK	ﾌｫｰｸ	2	MAST NO.1152- [LF190] INC.3-6
-	228A8-10693		FORK	ﾌｫｰｸ	2	MAST NO.1-1151 [LF197] INC.3-6
-	228A8-10694		FORK	ﾌｫｰｸ	2	MAST NO.1152- [LF197] INC.3-6
-	228A8-10813		FORK	ﾌｫｰｸ	2	MAST NO.1-942 [LF200] INC.3-6
-	228A8-10814		FORK	ﾌｫｰｸ	2	MAST NO.943- [LF200] INC.3-6
-	228A8-10823		FORK	ﾌｫｰｸ	2	MAST NO.1-942 [LF210] INC.3-6
-	228A8-10824		FORK	ﾌｫｰｸ	2	MAST NO.943- [LF210] INC.3-6
-	228A8-10703		FORK	ﾌｫｰｸ	2	MAST NO.1-942 [LF212] INC.3-6
-	228A8-10704		FORK	ﾌｫｰｸ	2	MAST NO.943- [LF212] INC.3-6
-	228A8-10713		FORK	ﾌｫｰｸ	2	MAST NO.1-942 [LF220] INC.3-6
-	228A8-10714		FORK	ﾌｫｰｸ	2	MAST NO.943- [LF220] INC.3-6
-	228A8-10723		FORK	ﾌｫｰｸ	2	MAST NO.1-942 [LF227] INC.3-6
-	228A8-10724		FORK	ﾌｫｰｸ	2	MAST NO.943- [LF227] INC.3-6
-	228A8-10733		FORK	ﾌｫｰｸ	2	MAST NO.1-942 [LF230] INC.3-6
-	228A8-10734		FORK	ﾌｫｰｸ	2	MAST NO.943- [LF230] INC.3-6
2	214J8-11001		STOPPER,FORK	ｽﾄｯﾊﾟ	2	INC.3-6(OLD PART)
-	214J8-11002		STOPPER,FORK	ｽﾄｯﾊﾟ	2	(NEW PART)
3	NO PART NO.	#	STOPPER	ｽﾄｯﾊﾟ	2	(OLD PART)
4	214J8-12001		HEAD	ﾍｯﾄﾞ	2	(OLD PART)

FIG.167 FORK & LIFT BRACKET [VM28E]

(M4048240) フォーク&リフトブラケット

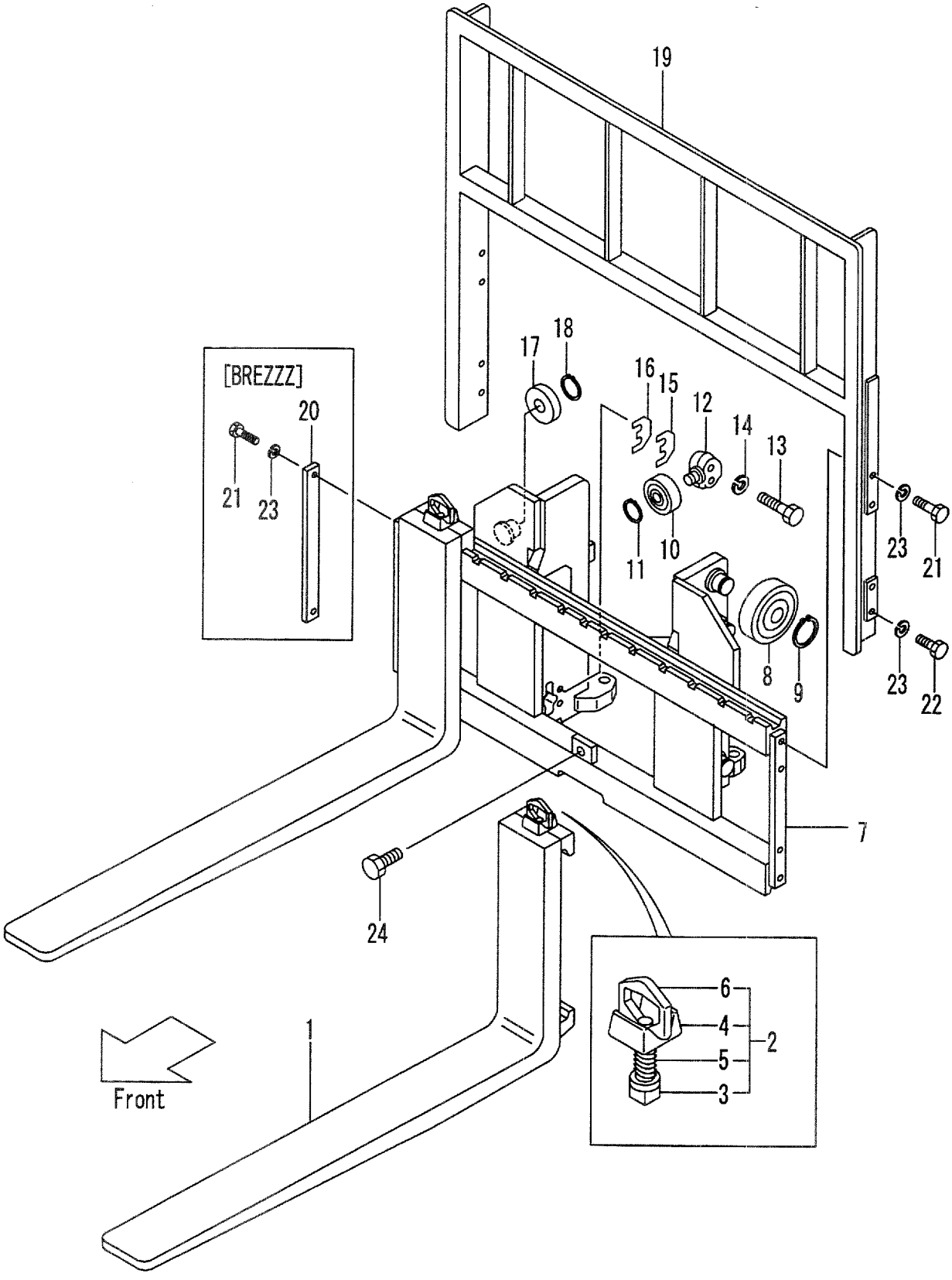

A:VM28E(FD45,FG45)

Item No	Part No.	Mark	Description		Req'd	Remarks : Serial No.
5	214J8-12031		SPRING	ｽﾌﾟﾘﾝｸﾞ	2	(OLD PART)
6	214A8-12021		HANDLE	ﾊﾝﾄﾞﾙ	2	(OLD PART)
7	228C8-20001		BRACKET,LIFT	ﾌﾞﾗｹｯﾄ	1	
-	228C8-21001		BRACKET,LIFT	ﾌﾞﾗｹｯﾄ	1	[LBR002]
-	528C1-62001		BRACKET,LIFT	ﾌﾞﾗｹｯﾄ	1	[WF150][WF168][WF183] [WF200]
-	528C1-62011		BRACKET,LIFT	ﾌﾞﾗｹｯﾄ	1	[WF180][WF240]
-	528C1-62051		BRACKET LIFT	ﾌﾞﾗｹｯﾄ	1	[LBR002/WF168]
-	528C7-32001		BRACKET,LIFT	ﾌﾞﾗｹｯﾄ	1	[TRB][TRV][TC]
-	528C7-32011		BRACKET,LIFT	ﾌﾞﾗｹｯﾄ	1	[TC/WF168]
-	528C7-32021		BRACKET,LIFT	ﾌﾞﾗｹｯﾄ	1	[TC/WF180]
8	23818-20701		ROLLER,END,143.5	ﾛｰﾗ	6	
-	23958-22081		ROLLER,END,144.0	ﾛｰﾗ	(6)	
9	02100-00050		RING,SNAP	ｽﾅｯﾌﾟﾘﾝｸﾞ	6	
A1	NO PART NO.	#	ROLLER-ASSY,SIDE	ｻｲﾄﾞﾛｰﾗｱｯｾﾝ	2	INC.10-12
10	22198-22341		ROLLER,END,91.5	ﾛｰﾗ	2	
11	02100-00030		RING,SNAP	ｽﾅｯﾌﾟﾘﾝｸﾞ	2	
12	24609-42131		SHAFT	ｼｬﾌﾄ	2	
13	01103-16065		BOLT	ﾎﾞﾙﾄ	4	
14	02011-00016		WASHER	ﾜｯｼｬ	4	
15	24609-42151		SHIM,T-1.0	ｼﾑ	8	
16	24609-42161		SHIM,T-0.2	ｼﾑ	8	
17	22198-22341		ROLLER,END,91.5	ﾛｰﾗ	2	
-	22198-22341		ROLLER,END,91.5	ﾛｰﾗ	2	[WF150][WF168][WF183] [WF200][TRB][TRV][TC] [TC/WF168]
-	22198-22341		ROLLER,END,91.5	ﾛｰﾗ	4	[LRB002][WF180][WF240] [LBR002/WF168][TC/WF180]
-	24258-33401		ROLLER,END,92.0	ﾛｰﾗ	(2)	
-	24258-33401		ROLLER,END,92.0	ﾛｰﾗ	(2)	[WF150][WF168][WF183] [WF200][TRB][TRV][TC] [TC/WF168]
-	24258-33401		ROLLER,END,92.0	ﾛｰﾗ	(4)	[LRB002][WF180][WF240] [LBR002/WF168][TC/WF180]
18	02100-00030		RING,SNAP	ｽﾅｯﾌﾟﾘﾝｸﾞ	2	
-	02100-00030		RING,SNAP	ｽﾅｯﾌﾟﾘﾝｸﾞ	2	[WF150][WF168][WF183] [WF200][TRB][TRV][TC] [TC/WF168]
-	02100-00030		RING,SNAP	ｽﾅｯﾌﾟﾘﾝｸﾞ	4	[LRB002][WF180][WF240] [LBR002/WF168][TC/WF180]
19	224T8-22301		BACKREST	ﾊﾞｯｸﾚｽﾄ	1	
-	524T2-74001		BACKREST	ﾊﾞｯｸﾚｽﾄ	1	[EXA][EXC]
-	524T1-64301		BACKREST	ﾊﾞｯｸﾚｽﾄ	1	[WF168][WBR]
-	524T1-64311		BACKREST	ﾊﾞｯｸﾚｽﾄ	1	[WF180][WWB]
-	224T8-22601		BACKREST,H-1300	ﾊﾞｯｸﾚｽﾄ	1	[HBR]
-	224T8-22611		BACKREST,H-1400	ﾊﾞｯｸﾚｽﾄ	1	[HBR]
-	224T8-22621		BACKREST,H-1500	ﾊﾞｯｸﾚｽﾄ	1	[HBR]
-	224T8-22631		BACKREST,H-1600	ﾊﾞｯｸﾚｽﾄ	1	[HBR]
20	24450-92021		PLATE	ﾌﾟﾚｰﾄ	2	[BREZZZ]
21	01100-14030		BOLT	ﾎﾞﾙﾄ	4	

FIG.167 FORK & LIFT BRACKET [VM28E]

(M4048240) フォーク&リフトブラケット

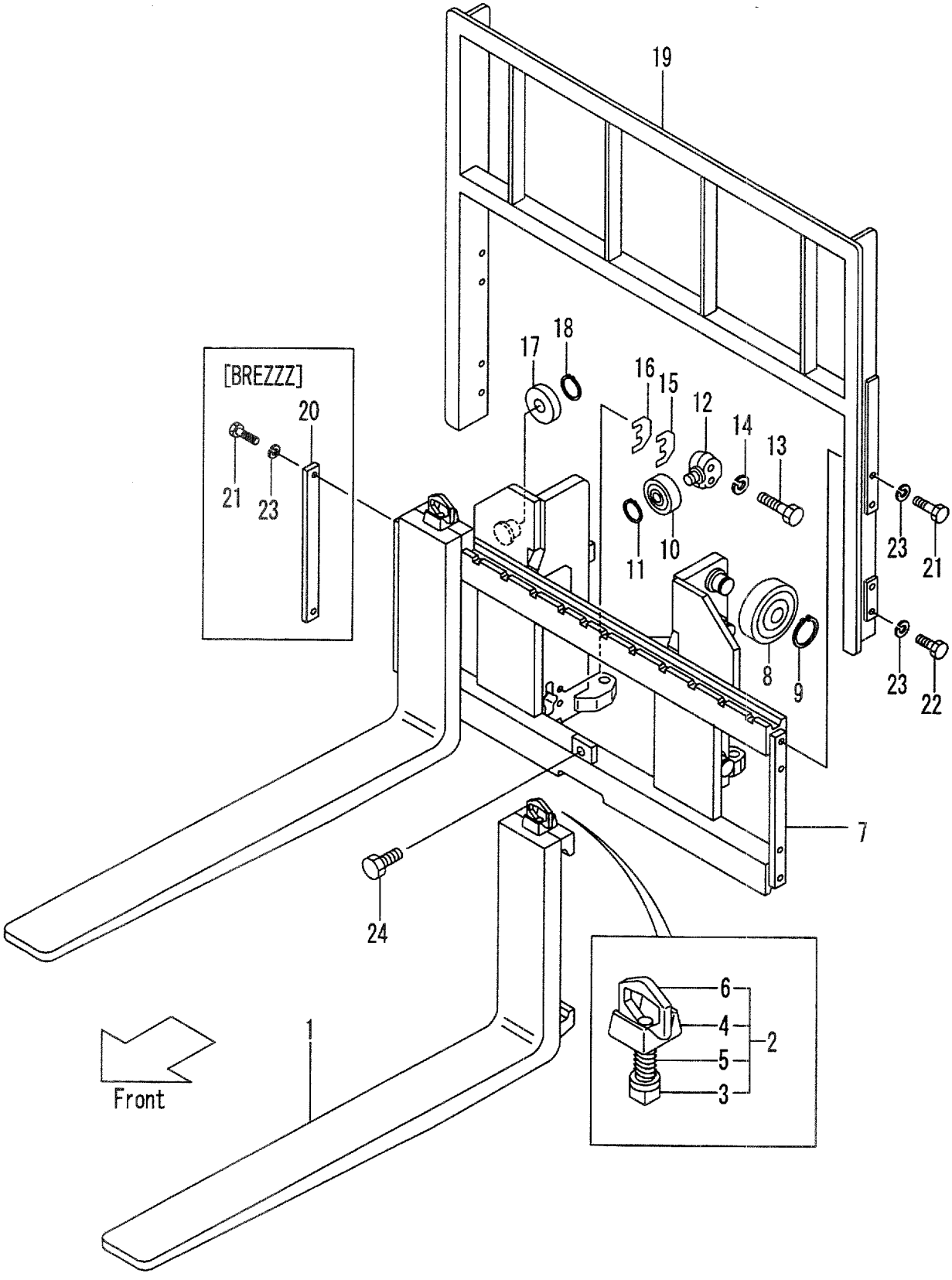

A: VM28E (FD45, FG45)

Item No	Part No.	Mark	Description		Req'd	Remarks : Serial No.
22	01100-14025		BOLT	ﾎﾞﾙﾄ	4	
23	02010-00014		WASHER	ﾜｯｼｬ	8	
-	02010-00014		WASHER	ﾜｯｼｬ	4	[BREZZZ]
24	01184-12025		BOLT	ﾎﾞﾙﾄ	1	

FIG.168 MAST [VM28E](FREE LIFT TYPE)

(M4048340) マスト

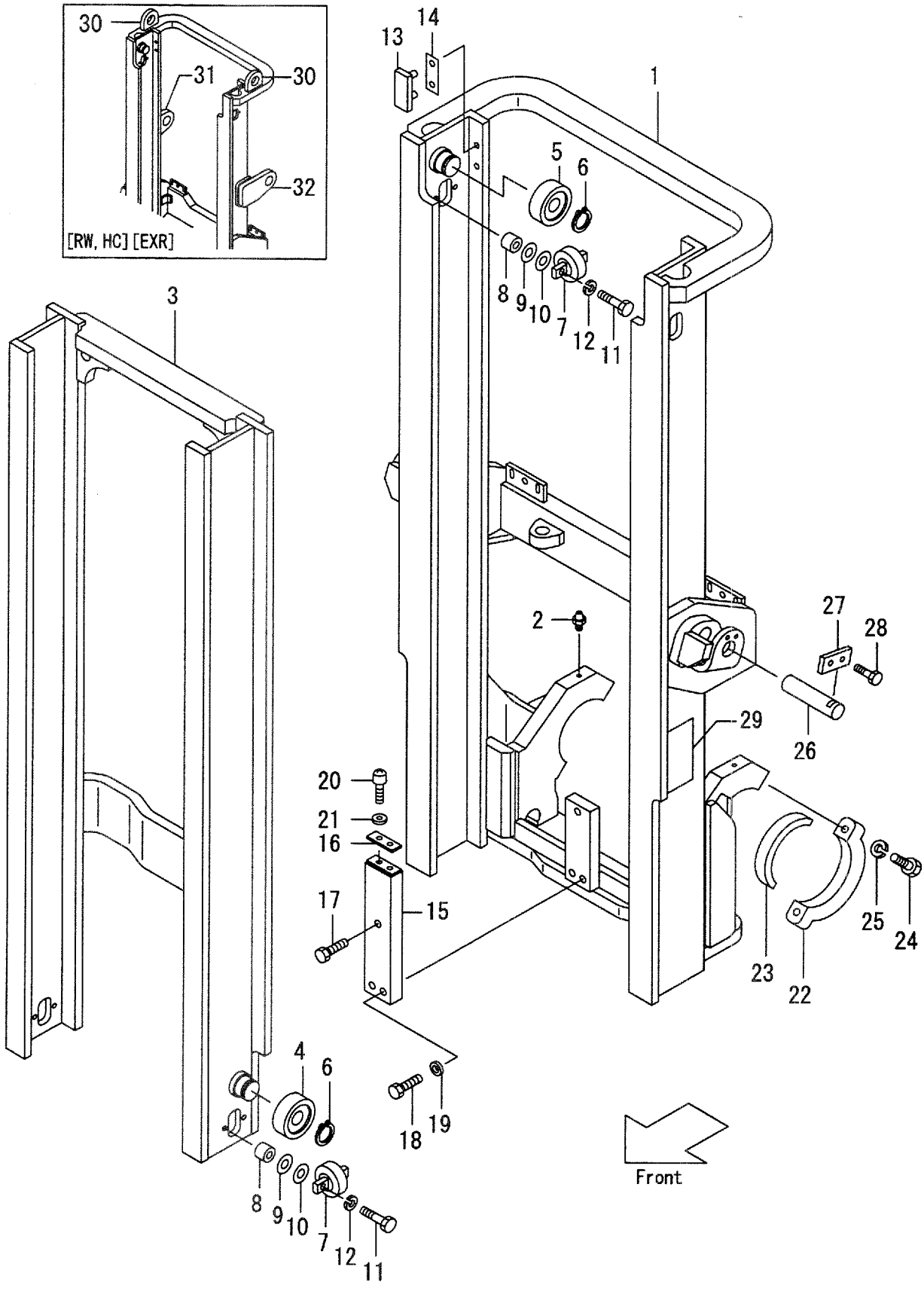

A:VM28E(FD45,FG45)

Item No	Part No.	Mark	Description		Req'd	Remarks : Serial No.
1	228E8-30011		MAST,OUTER VM250	ｱｳﾀﾏｽﾄ	1	MAST NO.1-17
-	228E8-30012		MAST,OUTER VM250	ｱｳﾀﾏｽﾄ	1	MAST NO.18-
-	228E8-30021		MAST,OUTER VM270	ｱｳﾀﾏｽﾄ	1	MAST NO.1-17
-	228E8-30022		MAST,OUTER VM270	ｱｳﾀﾏｽﾄ	1	MAST NO.18-
-	228E8-30031		MAST,OUTER VM275	ｱｳﾀﾏｽﾄ	1	MAST NO.1-17
-	228E8-30032		MAST,OUTER VM275	ｱｳﾀﾏｽﾄ	1	MAST NO.18-
-	228E8-30001		MAST,OUTER VM300	ｱｳﾀﾏｽﾄ	1	MAST NO.1-17
-	228E8-30002		MAST,OUTER VM300	ｱｳﾀﾏｽﾄ	1	MAST NO.18-
-	228E8-30041		MAST,OUTER VM325	ｱｳﾀﾏｽﾄ	1	MAST NO.1-17
-	228E8-30042		MAST,OUTER VM325	ｱｳﾀﾏｽﾄ	1	MAST NO.18-
-	228E8-30051		MAST,OUTER VM330	ｱｳﾀﾏｽﾄ	1	MAST NO.1-17
-	228E8-30052		MAST,OUTER VM330	ｱｳﾀﾏｽﾄ	1	MAST NO.18-
-	228E8-30061		MAST,OUTER VM350	ｱｳﾀﾏｽﾄ	1	MAST NO.1-17
-	228E8-30062		MAST,OUTER VM350	ｱｳﾀﾏｽﾄ	1	MAST NO.18-
-	228E8-30071		MAST,OUTER VM366	ｱｳﾀﾏｽﾄ	1	MAST NO.1-17
-	228E8-30072		MAST,OUTER VM366	ｱｳﾀﾏｽﾄ	1	MAST NO.18-
-	228E8-30081		MAST,OUTER VM370	ｱｳﾀﾏｽﾄ	1	MAST NO.1-17
-	228E8-30082		MAST,OUTER VM370	ｱｳﾀﾏｽﾄ	1	MAST NO.18-
-	228E8-30091		MAST,OUTER VM375	ｱｳﾀﾏｽﾄ	1	MAST NO.1-17
-	228E8-30092		MAST,OUTER VM375	ｱｳﾀﾏｽﾄ	1	MAST NO.18-
-	228E8-30101		MAST,OUTER VM400	ｱｳﾀﾏｽﾄ	1	MAST NO.1-17
-	228E8-30102		MAST,OUTER VM400	ｱｳﾀﾏｽﾄ	1	MAST NO.18-
-	228E8-30111		MAST,OUTER VM425	ｱｳﾀﾏｽﾄ	1	MAST NO.1-17
-	228E8-30112		MAST,OUTER VM425	ｱｳﾀﾏｽﾄ	1	MAST NO.18-
-	228E8-30121		MAST,OUTER VM450	ｱｳﾀﾏｽﾄ	1	MAST NO.1-17
-	228E8-30122		MAST,OUTER VM450	ｱｳﾀﾏｽﾄ	1	MAST NO.18-
-	228E8-30131		MAST,OUTER VM475	ｱｳﾀﾏｽﾄ	1	MAST NO.1-17
-	228E8-30132		MAST,OUTER VM475	ｱｳﾀﾏｽﾄ	1	MAST NO.18-
-	228E8-30141		MAST,OUTER VM500	ｱｳﾀﾏｽﾄ	1	MAST NO.1-17
-	228E8-30142		MAST,OUTER VM500	ｱｳﾀﾏｽﾄ	1	MAST NO.18-
-	228E8-30151		MAST,OUTER VM550	ｱｳﾀﾏｽﾄ	1	MAST NO.1-17
-	228E8-30152		MAST,OUTER VM550	ｱｳﾀﾏｽﾄ	1	MAST NO.18-
-	228E8-30161		MAST,OUTER VM600	ｱｳﾀﾏｽﾄ	1	MAST NO.1-17
-	228E8-30162		MAST,OUTER VM600	ｱｳﾀﾏｽﾄ	1	MAST NO.18-
2	04901-00160		FITTING	ﾌｨｯﾃｨﾝｸﾞ	2	
3	228E8-30211		MAST,INNER VM250	ｲﾝﾅﾏｽﾄ	1	
-	228E8-30221		MAST,INNER VM270	ｲﾝﾅﾏｽﾄ	1	
-	228E8-30231		MAST,INNER VM275	ｲﾝﾅﾏｽﾄ	1	
-	228E8-30201		MAST,INNER VM300	ｲﾝﾅﾏｽﾄ	1	
-	228E8-30241		MAST,INNER VM325	ｲﾝﾅﾏｽﾄ	1	
-	228E8-30251		MAST,INNER VM330	ｲﾝﾅﾏｽﾄ	1	
-	228E8-30261		MAST,INNER VM350	ｲﾝﾅﾏｽﾄ	1	
-	228E8-30271		MAST,INNER VM366	ｲﾝﾅﾏｽﾄ	1	
-	228E8-30281		MAST,INNER VM370	ｲﾝﾅﾏｽﾄ	1	
-	228E8-30291		MAST,INNER VM375	ｲﾝﾅﾏｽﾄ	1	
-	228E8-30301		MAST,INNER VM400	ｲﾝﾅﾏｽﾄ	1	
-	228E8-30311		MAST,INNER VM425	ｲﾝﾅﾏｽﾄ	1	
-	228E8-30321		MAST,INNER VM450	ｲﾝﾅﾏｽﾄ	1	
-	228E8-30331		MAST,INNER VM475	ｲﾝﾅﾏｽﾄ	1	
-	228E8-30341		MAST,INNER VM500	ｲﾝﾅﾏｽﾄ	1	

FIG.168 MAST [VM28E](FREE LIFT TYPE)

(M4048340) マスト

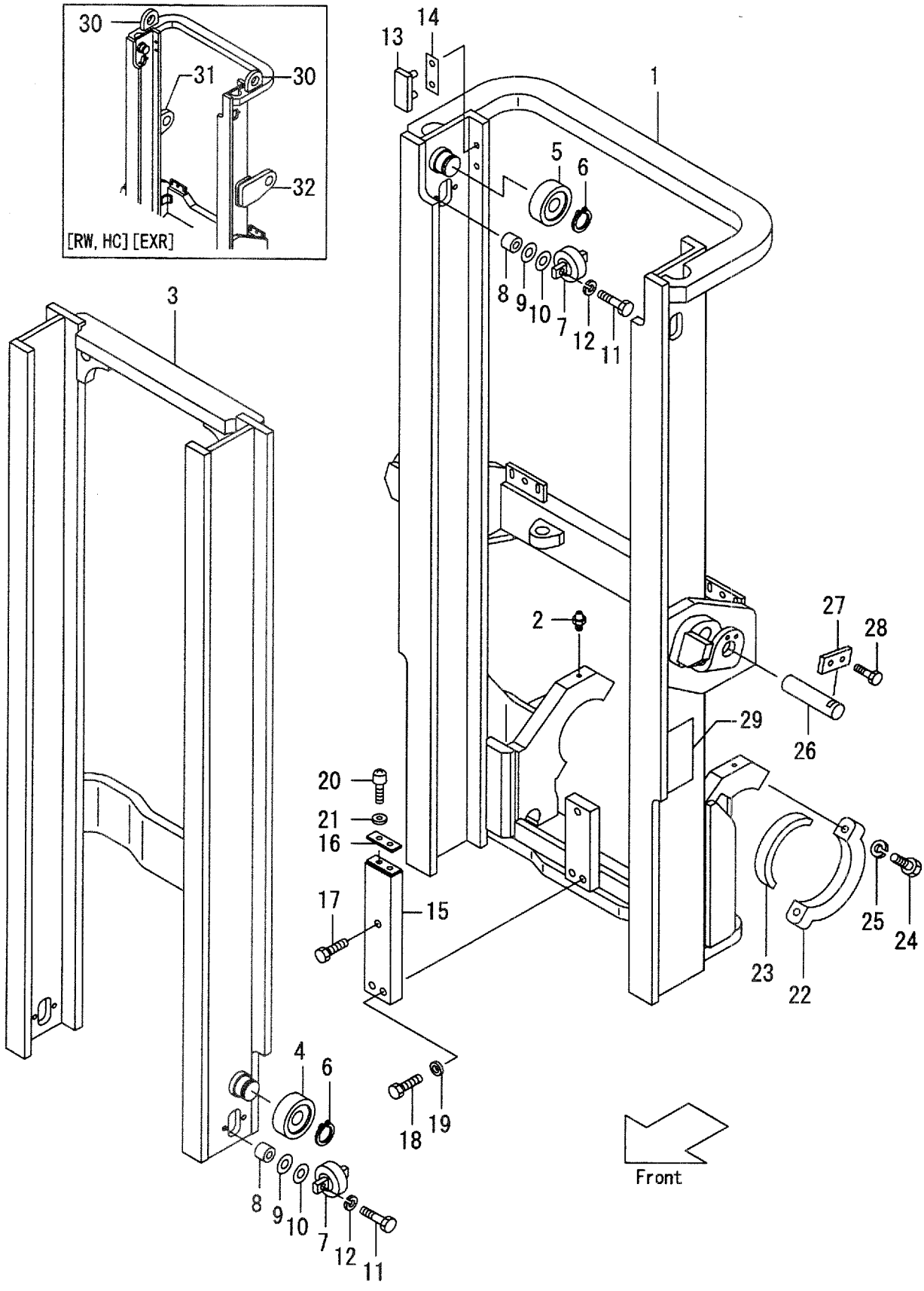

A:VM28E (FD45, FG45)

Item No	Part No.	Mark	Description		Req'd	Remarks : Serial No.
-	228E8-30351		MAST,INNER VM550	インナマスト	1	
-	228E8-30361		MAST,INNER VM600	インナマスト	1	
4	23818-20701		ROLLER,END,143.5	ローラ	2	
-	23958-22081		ROLLER,END,144.0	ローラ	(2)	
5	23818-20701		ROLLER,END,143.5	ローラ	2	
6	02100-00050		RING,SNAP	スナップリング	4	
7	23818-30301		ROLLER,SIDE	ローラ	4	
8	23818-30071		SPACER	スペーサ	8	
9	22548-34051		SHIM,T-0.5	シム	16	
10	22548-34061		SHIM,T-1.0	シム	8	
11	01100-12045		BOLT	ボルト	8	
12	02010-00012		WASHER	ワッシャ	8	
13	22678-32001		SLIPPER,T-4	スリッパ	2	
14	22679-43231		SHIM,T-0.5	シム	4	
15	224U8-32001		BRACKET	ブラケット	1	
16	27419-43321		STOPPER	ストッパ	1	
17	01103-16030		BOLT	ボルト	1	
18	01103-16040		BOLT	ボルト	2	
19	02011-00016		WASHER	ワッシャ	3	
20	01030-06010		SCREW	スクリュ	2	
21	02000-00006		WASHER	ワッシャ	2	
22	224T8-02201		CAP	キャップ	2	
23	224T8-02001		BUSHING	ブッシング	2	
24	01103-20085		BOLT	ボルト	4	
25	02010-00020		WASHER	ワッシャ	4	
26	224T8-52501		PIN	ピン	2	
27	23648-50161		PLATE	プレート	2	
28	01184-10020		BOLT	ボルト	4	
29	23678-06002		PLATE,NAME	プレート	1	
30	524T1-94001		HANGER	ハンガ	2	[RW][HC][EXR/VM250-275]
31	524T1-94011		HANGER,RH	ハンガ	1	[RW][HC][EXR/VM300-600]
32	524T1-94021		HANGER,LH	ハンガ	1	[RW][HC][EXR/VM300-600]

FIG.169 LAMP GUARD [(HL,HLG/HL,BKH)/VM28E]

(M40483A0) ﾗﾝﾌﾟｶﾞｰﾄﾞ

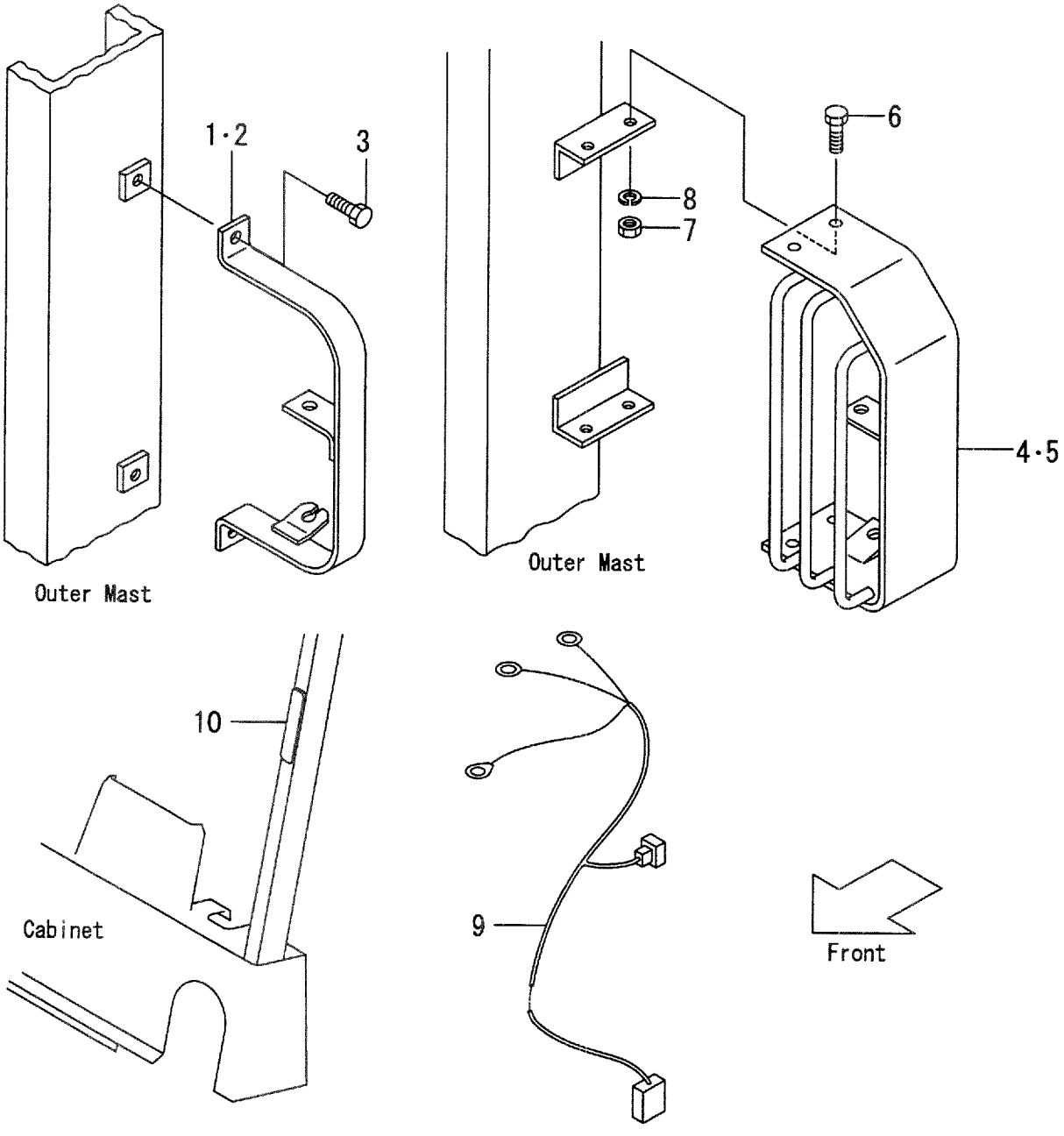

FIG.169
(M40483A0)

A:VM28E(FD45,FG45)

Item No	Part No.	Mark	Description		Req'd	Remarks : Serial No.
1	224W2-43001		BRACKET,LH	ﾌﾞﾗｹｯﾄ	1	[HL]
2	224W2-43011		BRACKET,RH	ﾌﾞﾗｹｯﾄ	1	[HL]
3	01184-12020		BOLT	ﾎﾞﾙﾄ	4	[HL]
4	224W2-43031		GUARD,HEAD-LAMP,LH	ｶﾞｰﾄﾞ	1	[HLG/HL][BKH]
5	224W2-43041		GUARD,HEAD-LAMP,RH	ｶﾞｰﾄﾞ	1	[HLG/HL][BKH]
6	01100-12030		BOLT	ﾎﾞﾙﾄ	8	[HLG/HL][BKH]
7	02010-00012		WASHER	ﾜｯｼｬ	8	[HLG/HL][BKH]
8	01400-00012		NUT	ﾅｯﾄ	8	[HLG/HL][BKH]
9	224W2-43081		WIRE-HARNESS	ﾜｲﾔﾊｰﾈｽ	2	[HL/VM250-275] [HGL/HL/VM250-275] [BKH/VM250-275]
-	224W2-43091		WIRE-HARNESS	ﾜｲﾔﾊｰﾈｽ	2	[HL/VM300-600] [HGL/HL/VM300-600] [BKH/VM300-600]
10	524W5-42061		BRACKET	ﾌﾞﾗｹｯﾄ	2	[HL][HLG/HL][BKH]

FIG.170 LIFT CYLINDER [VM28E]

(M4048440) リフトシリンダ

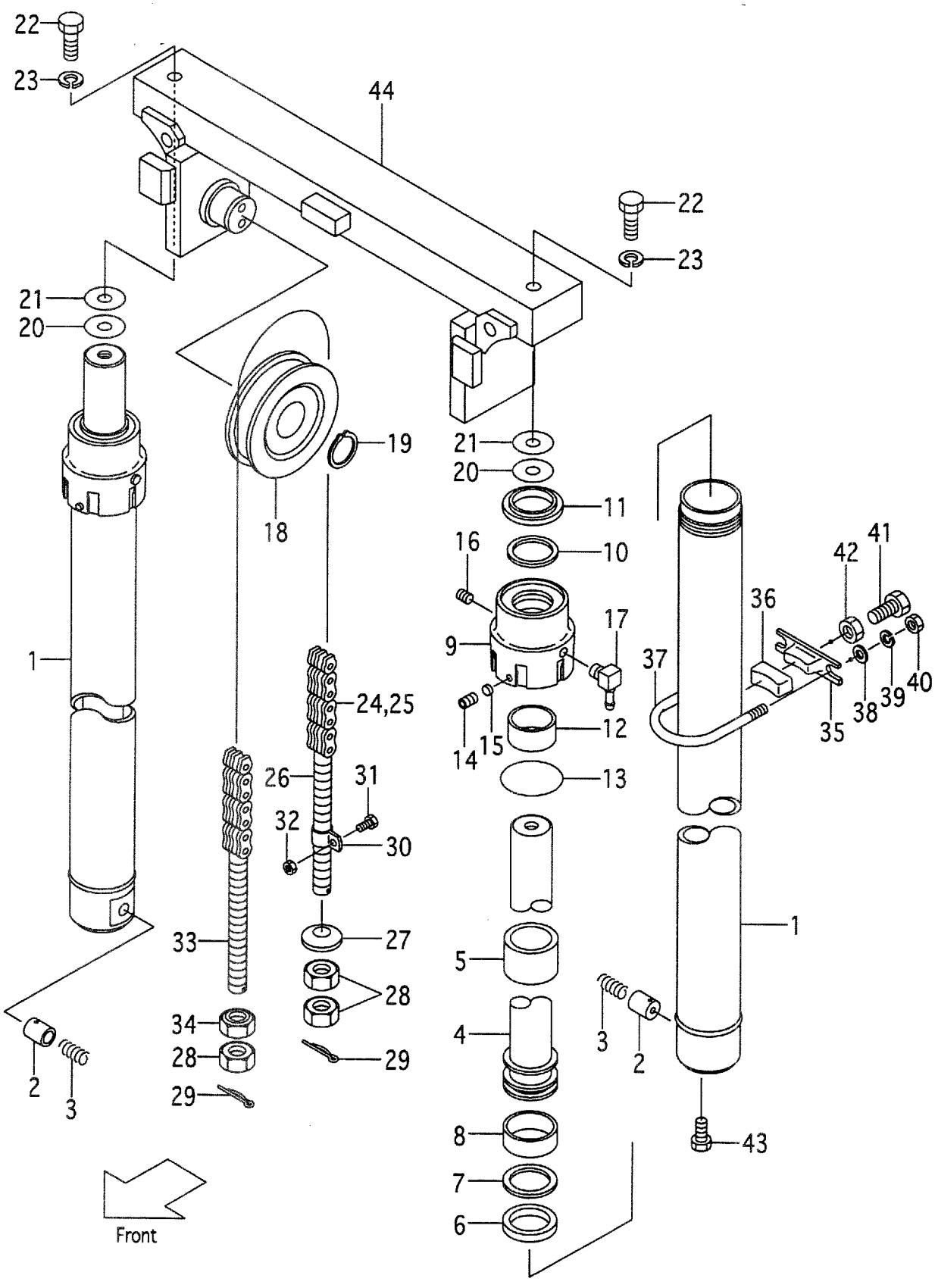

A:VM28E(FD45,FG45)

Item No	Part No.	Mark	Description		Req'd	Remarks : Serial No.
A1	228C8-40011		CYL-ASSY,LIFT VM250	ﾘﾌﾄｼﾘﾝﾀﾞｱｯｾﾝ	2	INC.1-17
-	228C8-40021		CYL-ASSY,LIFT VM270	ﾘﾌﾄｼﾘﾝﾀﾞｱｯｾﾝ	2	INC.1-17
-	228C8-40031		CYL-ASSY,LIFT VM275	ﾘﾌﾄｼﾘﾝﾀﾞｱｯｾﾝ	2	INC.1-17
-	228C8-40001		CYL-ASSY,LIFT VM300	ﾘﾌﾄｼﾘﾝﾀﾞｱｯｾﾝ	2	INC.1-17
-	228C8-40041		CYL-ASSY,LIFT VM325	ﾘﾌﾄｼﾘﾝﾀﾞｱｯｾﾝ	2	INC.1-17
-	228C8-40051		CYL-ASSY,LIFT VM330	ﾘﾌﾄｼﾘﾝﾀﾞｱｯｾﾝ	2	INC.1-17
-	228C8-40061		CYL-ASSY,LIFT VM350	ﾘﾌﾄｼﾘﾝﾀﾞｱｯｾﾝ	2	INC.1-17
-	228C8-40071		CYL-ASSY,LIFT VM366	ﾘﾌﾄｼﾘﾝﾀﾞｱｯｾﾝ	2	INC.1-17
-	228C8-40081		CYL-ASSY,LIFT VM370	ﾘﾌﾄｼﾘﾝﾀﾞｱｯｾﾝ	2	INC.1-17
-	228C8-40091		CYL-ASSY,LIFT VM375	ﾘﾌﾄｼﾘﾝﾀﾞｱｯｾﾝ	2	INC.1-17
-	228C8-40101		CYL-ASSY,LIFT VM400	ﾘﾌﾄｼﾘﾝﾀﾞｱｯｾﾝ	2	INC.1-17
-	228C8-40111		CYL-ASSY,LIFT VM425	ﾘﾌﾄｼﾘﾝﾀﾞｱｯｾﾝ	2	INC.1-17
-	228C8-40121		CYL-ASSY,LIFT VM450	ﾘﾌﾄｼﾘﾝﾀﾞｱｯｾﾝ	2	INC.1-17
-	228C8-40131		CYL-ASSY,LIFT VM475	ﾘﾌﾄｼﾘﾝﾀﾞｱｯｾﾝ	2	INC.1-17
-	228C8-40141		CYL-ASSY,LIFT VM500	ﾘﾌﾄｼﾘﾝﾀﾞｱｯｾﾝ	2	INC.1-17
-	228C8-40151		CYL-ASSY,LIFT VM550	ﾘﾌﾄｼﾘﾝﾀﾞｱｯｾﾝ	2	INC.1-17
-	228C8-40161		CYL-ASSY,LIFT VM600	ﾘﾌﾄｼﾘﾝﾀﾞｱｯｾﾝ	2	INC.1-17
1	228C8-40211		TUBE VM250	ﾁｭｰﾌﾞ	2	
-	228C8-40221		TUBE VM270	ﾁｭｰﾌﾞ	2	
-	228C8-40231		TUBE VM275	ﾁｭｰﾌﾞ	2	
-	228C8-40201		TUBE VM300	ﾁｭｰﾌﾞ	2	
-	228C8-40241		TUBE VM325	ﾁｭｰﾌﾞ	2	
-	228C8-40251		TUBE VM330	ﾁｭｰﾌﾞ	2	
-	228C8-40261		TUBE VM350	ﾁｭｰﾌﾞ	2	
-	228C8-40271		TUBE VM366	ﾁｭｰﾌﾞ	2	
-	228C8-40281		TUBE VM370	ﾁｭｰﾌﾞ	2	
-	228C8-40291		TUBE VM375	ﾁｭｰﾌﾞ	2	
-	228C8-40301		TUBE VM400	ﾁｭｰﾌﾞ	2	
-	228C8-40311		TUBE VM425	ﾁｭｰﾌﾞ	2	
-	228C8-40321		TUBE VM450	ﾁｭｰﾌﾞ	2	
-	228C8-40331		TUBE VM475	ﾁｭｰﾌﾞ	2	
-	228C8-40341		TUBE VM500	ﾁｭｰﾌﾞ	2	
-	228C8-40351		TUBE VM550	ﾁｭｰﾌﾞ	2	
-	228C8-40361		TUBE VM600	ﾁｭｰﾌﾞ	2	
2	228C8-42801		PISTON	ﾋﾟｽﾄﾝ	2	
3	25908-44281		SPRING	ｽﾌﾟﾘﾝｸﾞ	2	
4	228C8-40411		ROD,PISTON VM250	ﾛｯﾄﾞ	2	
-	228C8-40421		ROD,PISTON VM270	ﾛｯﾄﾞ	2	
-	228C8-40431		ROD,PISTON VM275	ﾛｯﾄﾞ	2	
-	228C8-40401		ROD,PISTON VM300	ﾛｯﾄﾞ	2	
-	228C8-40441		ROD,PISTON VM325	ﾛｯﾄﾞ	2	
-	228C8-40451		ROD,PISTON VM330	ﾛｯﾄﾞ	2	
-	228C8-40461		ROD,PISTON VM350	ﾛｯﾄﾞ	2	
-	228C8-40471		ROD,PISTON VM366	ﾛｯﾄﾞ	2	
-	228C8-40481		ROD,PISTON VM370	ﾛｯﾄﾞ	2	
-	228C8-40491		ROD,PISTON VM375	ﾛｯﾄﾞ	2	
-	228C8-40501		ROD,PISTON VM400	ﾛｯﾄﾞ	2	
-	228C8-40511		ROD,PISTON VM425	ﾛｯﾄﾞ	2	
-	228C8-40521		ROD,PISTON VM450	ﾛｯﾄﾞ	2	
-	228C8-40531		ROD,PISTON VM475	ﾛｯﾄﾞ	2	

FIG.170 LIFT CYLINDER [VM28E]

(M4048440) リフトシリンダ

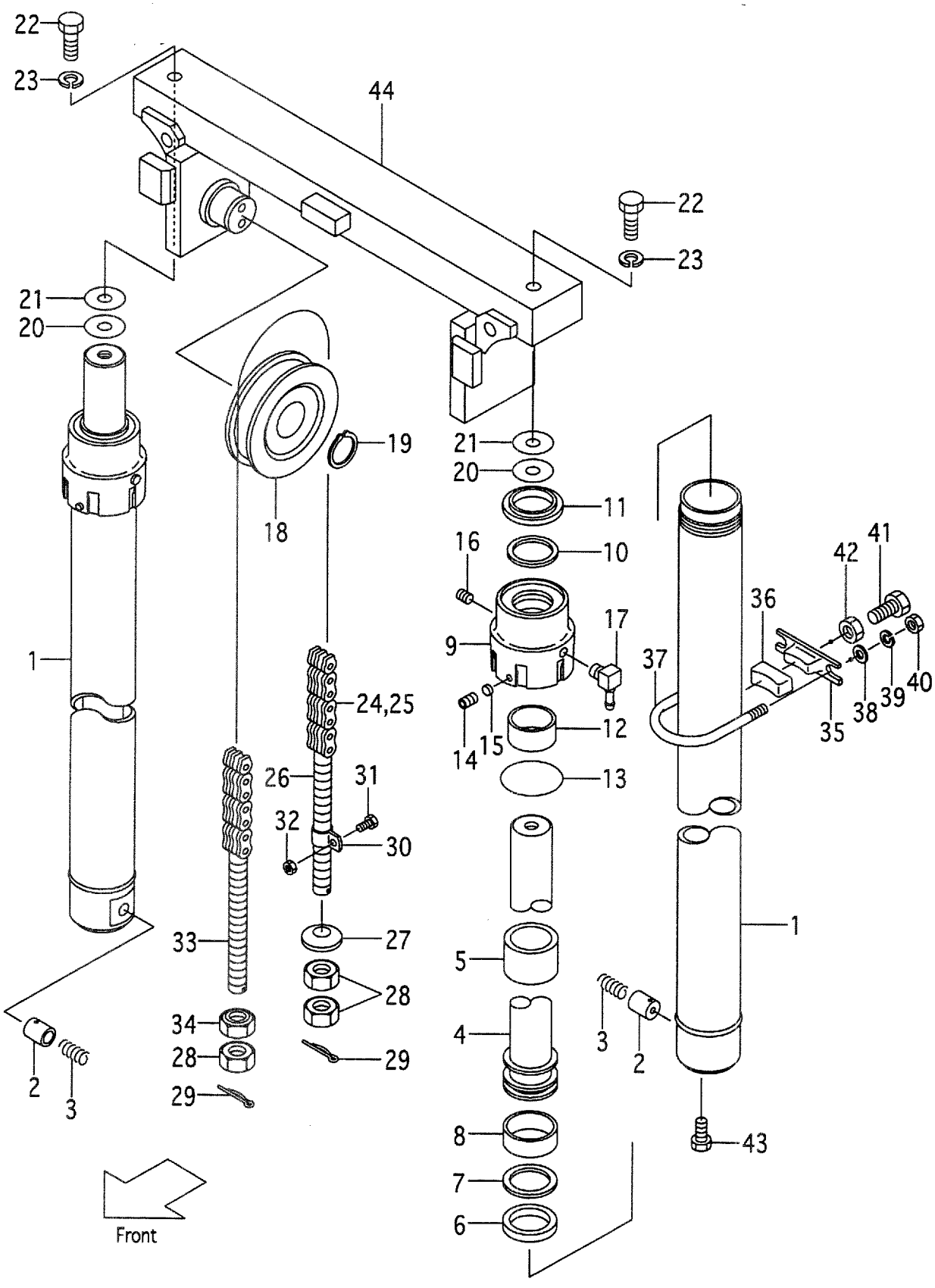

A:VM28E(FD45, FG45)

Item No	Part No.	Mark	Description		Req'd	Remarks : Serial No.
-	228C8-40541		ROD,PISTON VM500	ﾛｯﾄﾞ	2	
-	228C8-40551		ROD,PISTON VM550	ﾛｯﾄﾞ	2	
-	228C8-40561		ROD,PISTON VM600	ﾛｯﾄﾞ	2	
5	224T8-42471		SPACER	ｽﾍﾟｰｻ	2	(VM400-500)
-	224T8-42481		SPACER	ｽﾍﾟｰｻ	2	(VM550-600)
6	22580-82471		PACKING	ﾊﾟｯｷﾝｸﾞ	2	
7	228C8-42541		RING,BACK-UP	ﾘﾝｸﾞ	2	
8	22580-82461		WEARING	ｳｴｱﾘﾝｸﾞ	2	
9	228C8-42401		CAP	ｷｬｯﾌﾟ	2	
10	224T8-46011		PACKING	ﾊﾟｯｷﾝｸﾞ	2	
11	224T8-46001		SEAL,DUST	ｼｰﾙ	2	
12	23460-53171		BUSHING	ﾌﾞｯｼﾝｸﾞ	2	
13	03340-00130		O-RING	Oﾘﾝｸﾞ	2	
14	25908-44101		PLUG	ﾌﾟﾗｸﾞ	2	
15	25908-44111		PLUG,NYLON	ﾌﾟﾗｸﾞ	2	
16	24329-45541		PLUG	ﾌﾟﾗｸﾞ	2	
17	24329-45531		ELBOW	ｴﾙﾎﾞ	2	
18	24609-41241		SHEAVE	ｼｰﾌﾞ	2	
19	02100-00050		RING,SNAP	ｽﾅｯﾌﾟﾘﾝｸﾞ	2	
20	24319-45781		SHIM,T-0.2	ｼﾑ	4	
21	24319-45791		SHIM,T-1.0	ｼﾑ	2	
22	01103-16065		BOLT	ﾎﾞﾙﾄ	2	
23	02011-00016		WASHER	ﾜｯｼｬ	2	
24	23918-45811		CHAIN,LEAF VM250	ﾁｪｰﾝ	2	INC.25
-	23918-45891		CHAIN,LEAF VM270	ﾁｪｰﾝ	2	INC.25
-	23918-45911		CHAIN,LEAF VM275	ﾁｪｰﾝ	2	INC.25
-	23918-46011		CHAIN,LEAF VM300	ﾁｪｰﾝ	2	INC.25
-	23918-46111		CHAIN,LEAF VM325	ﾁｪｰﾝ	2	INC.25
-	23918-46131		CHAIN,LEAF VM330	ﾁｪｰﾝ	2	INC.25
-	23918-46211		CHAIN,LEAF VM350	ﾁｪｰﾝ	2	INC.25
-	23918-46271		CHAIN,LEAF VM366	ﾁｪｰﾝ	2	INC.25
-	23918-46291		CHAIN,LEAF VM370	ﾁｪｰﾝ	2	INC.25
-	23918-46311		CHAIN,LEAF VM375	ﾁｪｰﾝ	2	INC.25
-	23918-46031		CHAIN,LEAF VM400	ﾁｪｰﾝ	2	INC.25
-	23918-46071		CHAIN,LEAF VM425	ﾁｪｰﾝ	2	INC.25
-	23918-46131		CHAIN,LEAF VM450	ﾁｪｰﾝ	2	INC.25
-	23918-46231		CHAIN,LEAF VM475	ﾁｪｰﾝ	2	INC.25
-	23918-46331		CHAIN,LEAF VM500	ﾁｪｰﾝ	2	INC.25
-	23918-46351		CHAIN,LEAF VM550	ﾁｪｰﾝ	2	INC.25
-	23918-46451		CHAIN,LEAF VM600	ﾁｪｰﾝ	2	INC.25
25	23918-42921		LINK	ﾘﾝｸ	2	
26	24329-45441		PIN	ﾋﾟﾝ	2	
27	24319-45751		CORN	ｺｰﾝ	2	
28	01402-00022		NUT	ﾅｯﾄ	6	
29	02200-03040		PIN,COTTER	ﾋﾟﾝ	4	
30	224T8-42621		CLIP	ｸﾘｯﾌﾟ	2	
31	01183-06016		BOLT	ﾎﾞﾙﾄ	2	
32	01400-00006		NUT	ﾅｯﾄ	2	
33	23918-42681		PIN,ANCHOR	ﾋﾟﾝ	2	
34	23818-30271		NUT	ﾅｯﾄ	2	

FIG.170 LIFT CYLINDER [VM28E]

(M4048440) リフトシリンダ

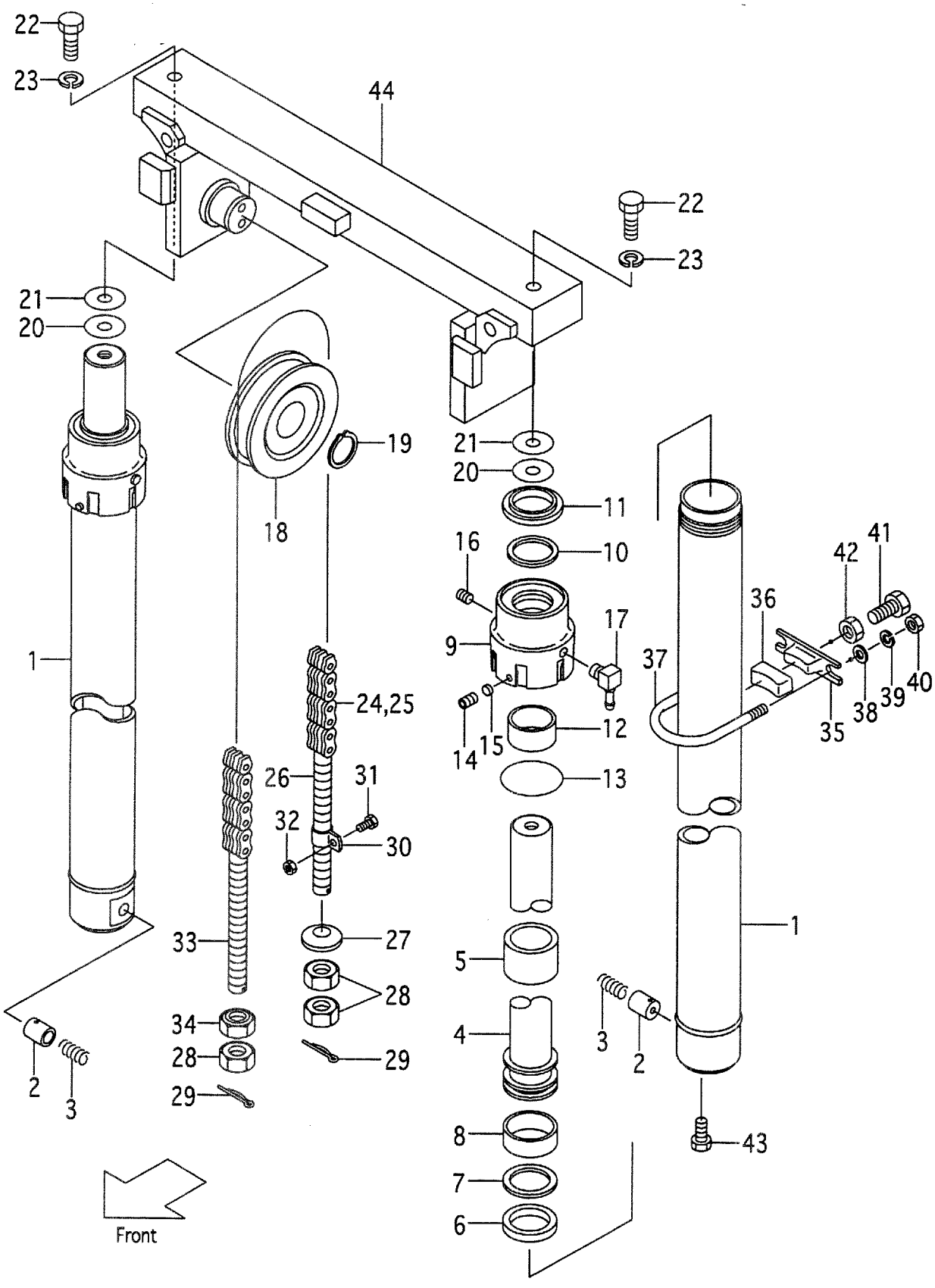

A:VM28E(FD45,FG45)

Item No	Part No.	Mark	Description		Req'd	Remarks : Serial No.
35	224T8-42711		SUPPORT	ｻﾎﾟｰﾄ	2	(VM250-550)
-	224T8-42711		SUPPORT	ｻﾎﾟｰﾄ	4	(VM600)
36	214A8-42631		RUBBER	ﾗﾊﾞｰ	2	(VM250-550)
-	214A8-42631		RUBBER	ﾗﾊﾞｰ	4	(VM600)
37	228C8-42701		U-BOLT	Uﾎﾞﾙﾄ	2	(VM250-550)
-	228C8-42701		U-BOLT	Uﾎﾞﾙﾄ	4	(VM600)
38	02000-00010		WASHER	ﾜｯｼｬ	4	(VM250-550)
-	02000-00010		WASHER	ﾜｯｼｬ	8	(VM600)
39	02010-00010		WASHER	ﾜｯｼｬ	4	(VM250-550)
-	02010-00010		WASHER	ﾜｯｼｬ	8	(VM600)
40	01400-00010		NUT	ﾅｯﾄ	4	(VM250-550)
-	01400-00010		NUT	ﾅｯﾄ	8	(VM600)
41	01120-16040		BOLT	ﾎﾞﾙﾄ	2	(VM250-550)
-	01120-16040		BOLT	ﾎﾞﾙﾄ	4	(VM600)
42	01402-00016		NUT	ﾅｯﾄ	2	(VM250-550)
-	01402-00016		NUT	ﾅｯﾄ	4	(VM600)
43	214A0-82831		BOLT	ﾎﾞﾙﾄ	2	
44	224U8-42001		HEAD,PISTON	ﾍｯﾄﾞ	1	

FIG.171 MAST PIPING [VM28E]

(M4048490) マストパイピング

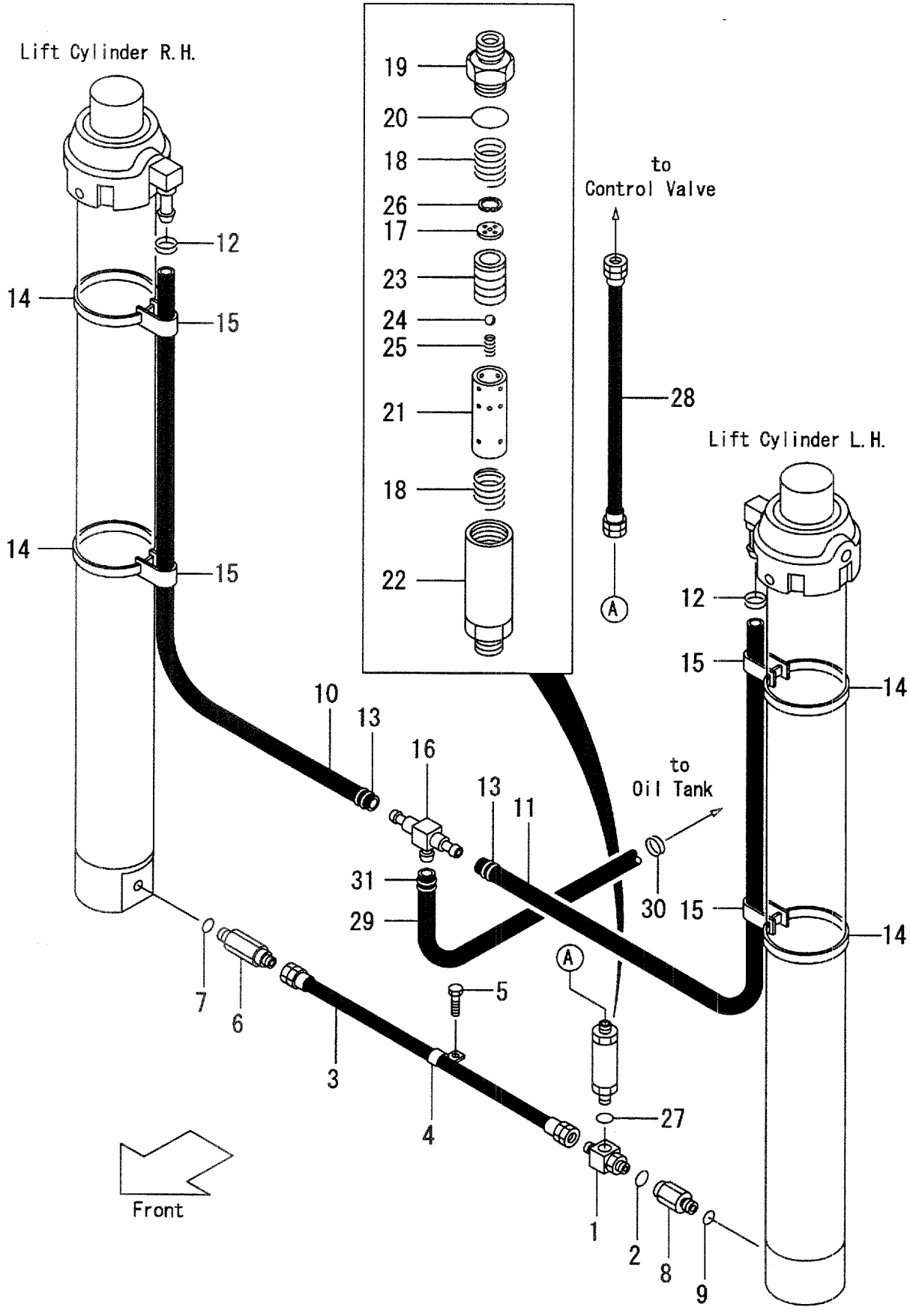

A:VM28E(FD45,FG45)

Item No	Part No.	Mark	Description		Req'd	Remarks : Serial No.
A1	24609-43682		THREE-WAY-ASSY	ｽﾘｰｳｪｲｱｯｾﾝ	1	INC.1,2
1	NO PART NO.	#	THREE-WAY	ｽﾘｰｳｴｲ	1	
2	03320-00180		O-RING	Oﾘﾝｸﾞ	1	
3	224T8-42861		HOSE,HP	ﾎｰｽ	1	
4	214A8-43081		CLIP	ｸﾘｯﾌﾟ	1	
5	01184-10020		BOLT	ﾎﾞﾙﾄ	1	
A2	224T8-44001		NIPPLE-ASSY	ﾆｯﾌﾟﾙｱｯｾﾝ	1	INC.6,7
6	NO PART NO.	#	NIPPLE	ﾆｯﾌﾟﾙ	1	
7	03320-00240		O-RING	Oﾘﾝｸﾞ	1	
A3	224T8-44021		NIPPLE-ASSY	ﾆｯﾌﾟﾙｱｯｾﾝ	1	INC.8,9
8	NO PART NO.	#	NIPPLE	ﾆｯﾌﾟﾙ	1	
9	03320-00240		O-RING	Oﾘﾝｸﾞ	1	
10	24328-40080		HOSE,RH VM250	ﾎｰｽ	1	
-	24328-40090		HOSE,RH VM270	ﾎｰｽ	1	
-	24328-40095		HOSE,RH VM275	ﾎｰｽ	1	
-	24328-40105		HOSE,RH VM300	ﾎｰｽ	1	
-	24328-40120		HOSE,RH VM325	ﾎｰｽ	1	
-	24328-40120		HOSE,RH VM330	ﾎｰｽ	1	
-	24328-40130		HOSE,RH VM350	ﾎｰｽ	1	
-	24328-40140		HOSE,RH VM366	ﾎｰｽ	1	
-	24328-40140		HOSE,RH VM370	ﾎｰｽ	1	
-	24328-40145		HOSE,RH VM375	ﾎｰｽ	1	
-	24328-40160		HOSE,RH VM400	ﾎｰｽ	1	
-	24328-40175		HOSE,RH VM425	ﾎｰｽ	1	
-	24328-40185		HOSE,RH VM450	ﾎｰｽ	1	
-	24328-40200		HOSE,RH VM475	ﾎｰｽ	1	
-	24328-40210		HOSE,RH VM500	ﾎｰｽ	1	
-	24328-40240		HOSE,RH VM550	ﾎｰｽ	1	
-	24328-40265		HOSE,RH VM600	ﾎｰｽ	1	
11	24328-40130		HOSE,LH VM250	ﾎｰｽ	1	
-	24328-40140		HOSE,LH VM270	ﾎｰｽ	1	
-	24328-40145		HOSE,LH VM275	ﾎｰｽ	1	
-	24328-40155		HOSE,LH VM300	ﾎｰｽ	1	
-	24328-40170		HOSE,LH VM325	ﾎｰｽ	1	
-	24328-40170		HOSE,LH VM330	ﾎｰｽ	1	
-	24328-40180		HOSE,LH VM350	ﾎｰｽ	1	
-	24328-40190		HOSE,LH VM366	ﾎｰｽ	1	
-	24328-40190		HOSE,LH VM370	ﾎｰｽ	1	
-	24328-40195		HOSE,LH VM375	ﾎｰｽ	1	
-	24328-40210		HOSE,LH VM400	ﾎｰｽ	1	
-	24328-40225		HOSE,LH VM425	ﾎｰｽ	1	
-	24328-40235		HOSE,LH VM450	ﾎｰｽ	1	
-	24328-40250		HOSE,LH VM475	ﾎｰｽ	1	
-	24328-40260		HOSE,LH VM500	ﾎｰｽ	1	
-	24328-40290		HOSE,LH VM550	ﾎｰｽ	1	
-	24328-40315		HOSE,LH VM600	ﾎｰｽ	1	
12	04911-00022		CLIP	ｸﾘｯﾌﾟ	2	
13	24329-46201		CLIP	ｸﾘｯﾌﾟ	2	
14	23678-42411		BAND	ﾊﾞﾝﾄﾞ	4	
15	53675-54101		BAND	ﾊﾞﾝﾄﾞ	4	

FIG.171 MAST PIPING [VM28E]

(M4048490) マストパイピング

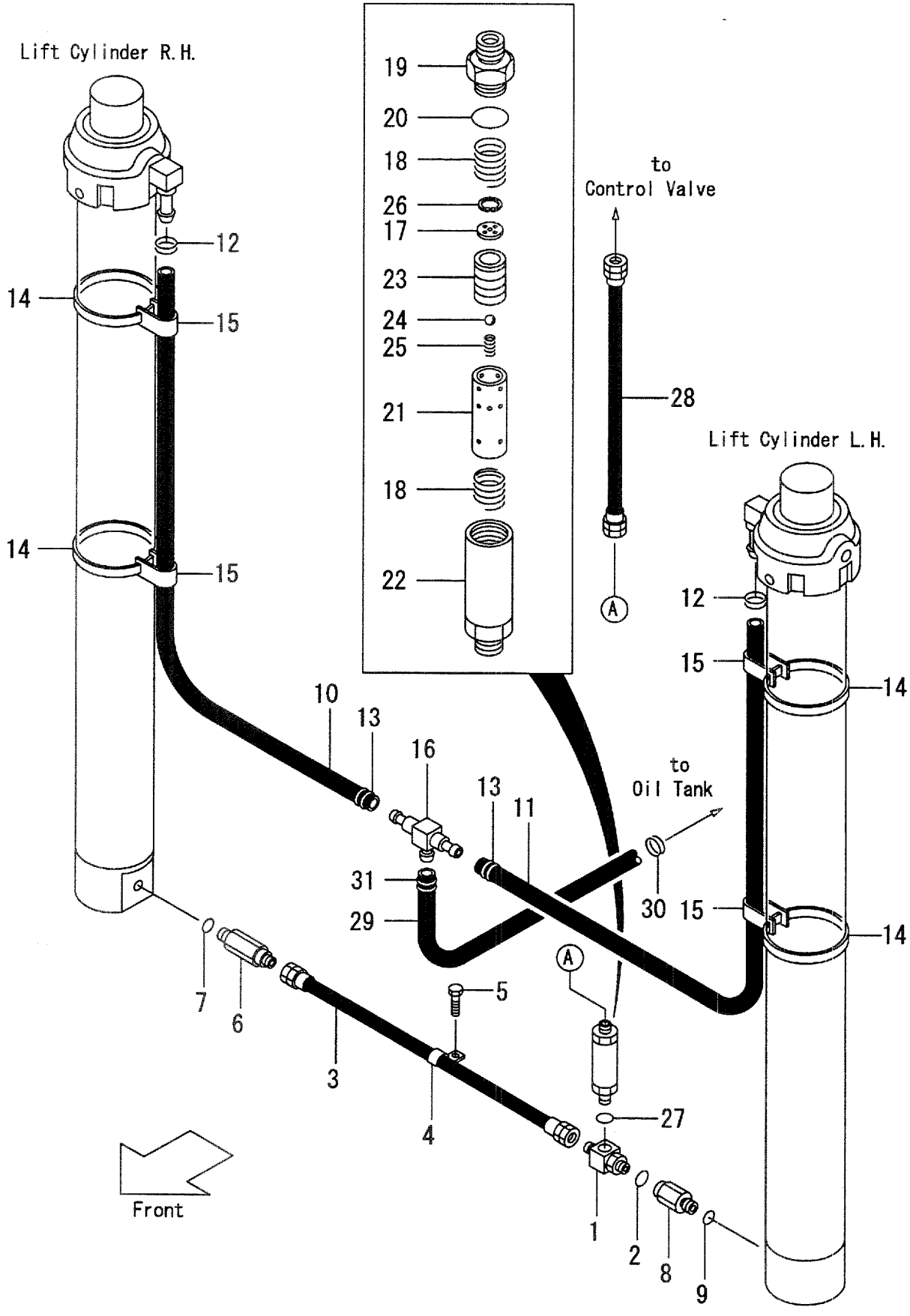

A:VM28E (FD45, FG45)

Item No	Part No.	Mark	Description		Req'd	Remarks : Serial No.
16	24329-46052		THREE-WAY	ｽﾘｰｳｴｲ	1	
A4	228C8-41002		REGULATOR-ASSY,FLOW	ﾚｷﾞｭﾚｰﾀｱｯｾﾝ	1	INC.17-26
17	NO PART NO.	#	PLATE,ORIFICE	ﾌﾟﾚｰﾄ	1	
18	24609-43631		SPRING	ｽﾌﾟﾘﾝｸﾞ	2	
19	NO PART NO.	#	NIPPLE	ﾆｯﾌﾟﾙ	1	
20	03300-00360		O-RING	Oﾘﾝｸﾞ	1	(OLD PART)
-	03320-00360		O-RING	Oﾘﾝｸﾞ	1	(NEW PART)
21	NO PART NO.	#	SLEEVE	ｽﾘｰﾌﾞ	1	
22	NO PART NO.	#	CASE	ｹｰｽ	1	
23	NO PART NO.	#	PISTON	ﾋﾟｽﾄﾝ	1	
24	24459-42951		BALL	ﾎﾞｰﾙ	1	
25	214A8-44151		SPRING	ｽﾌﾟﾘﾝｸﾞ	1	
26	02110-00020		RING,SNAP	ｽﾅｯﾌﾟﾘﾝｸﾞ	1	
27	03320-00240		O-RING	Oﾘﾝｸﾞ	1	
28	224T8-02101		HOSE,HP	ﾎｰｽ	1	
29	04710-06113		HOSE,LP	ﾎｰｽ	1	
30	04911-00032		CLIP	ｸﾘｯﾌﾟ	1	
31	24329-46211		CLIP	ｸﾘｯﾌﾟ	1	

FIG.172 FORK & LIFT BRACKET [VM35H]

(M4048250) フォーク&リフトブラケット

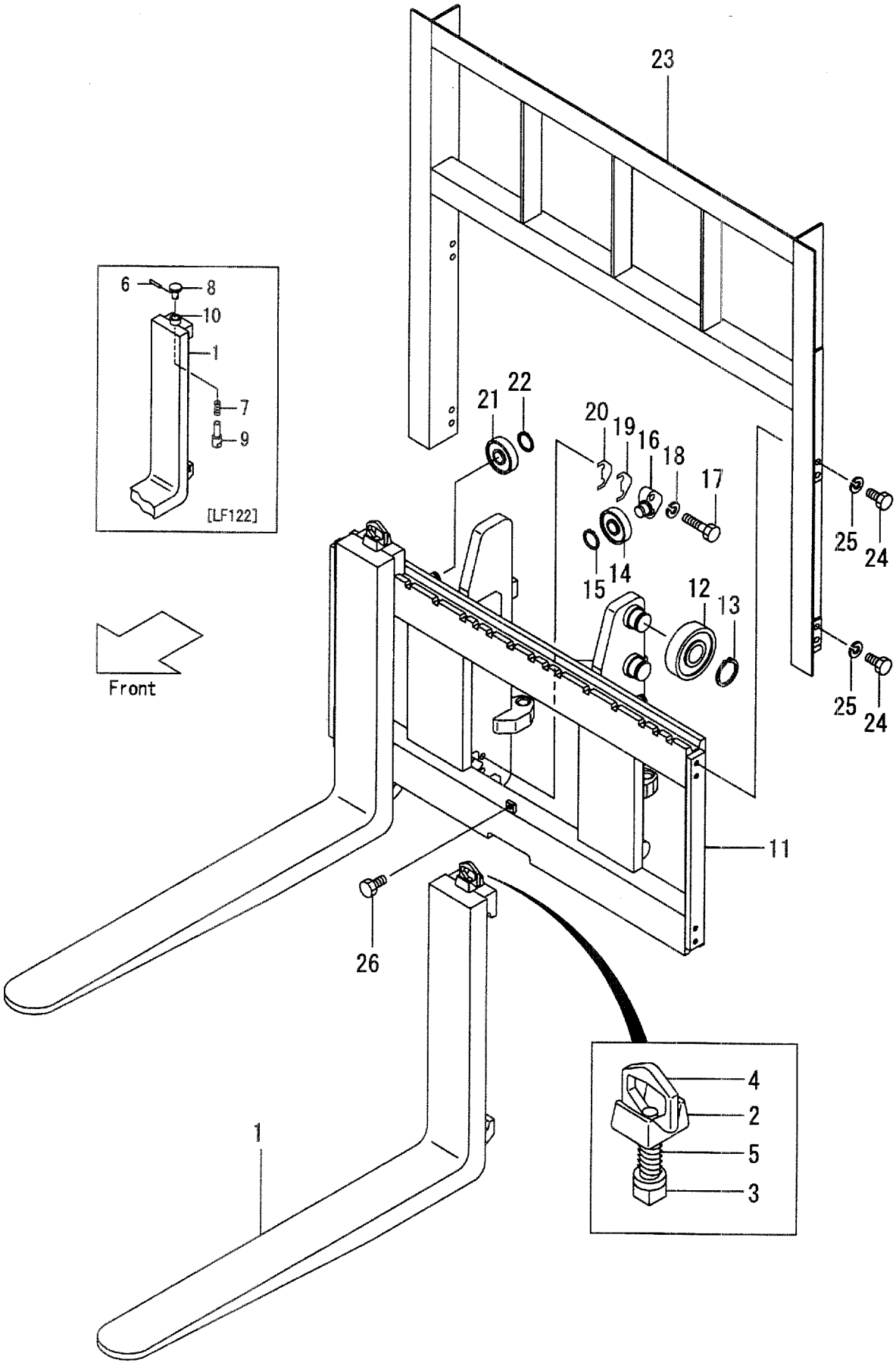

A:VM35H(FD50,FG50)

Item No	Part No.	Mark	Description		Req'd	Remarks : Serial No.
1	25788-10305		FORK	ﾌｫｰｸ	2	(L=1220) INC.6-10
-	25788-10305		FORK	ﾌｫｰｸ	2	[LF122] INC.6-10
-	25788-10315		FORK	ﾌｫｰｸ	2	[LF137] INC.2-5
-	25788-10325		FORK	ﾌｫｰｸ	2	[LF152] INC.2-5
-	25788-10335		FORK	ﾌｫｰｸ	2	[LF167] INC.2-5
-	25788-10345		FORK	ﾌｫｰｸ	2	[LF182] INC.2-5
-	25788-10355		FORK	ﾌｫｰｸ	2	[LF197] INC.2-5
-	25788-10365		FORK	ﾌｫｰｸ	2	[LF212] INC.2-5
-	25788-10375		FORK	ﾌｫｰｸ	2	[LF227] INC.2-5
A1	25788-11001		STOPPER-ASSY,FORK	ｽﾄｯﾊﾟｱｯｾﾝ	2	INC.2-5
2	NO PART NO.	#	STOPPER	ｽﾄｯﾊﾟ	2	
3	25788-12301		HEAD	ﾍｯﾄﾞ	2	
4	214J8-12031		SPRING	ｽﾌﾟﾘﾝｸﾞ	2	
5	214A8-12021		HANDLE	ﾊﾝﾄﾞﾙ	2	
A2	25788-12501		STOPPER-ASSY,FORK	ｽﾄｯﾊﾟｱｯｾﾝ	2	INC.6-10
6	25788-12511		PIN	ﾋﾟﾝ	2	
7	25788-12521		SPRING	ｽﾌﾟﾘﾝｸﾞ	2	
8	25788-12531		KNOB	ﾉﾌﾞ	2	
9	25788-12541		PIN	ﾋﾟﾝ	2	
10	25788-12551		SLEEVE	ｽﾘｰﾌﾞ	2	
11	235H8-20001		BRACKET,LIFT	ﾌﾞﾗｹｯﾄ	1	
12	23818-20701		ROLLER,END,143.5	ﾛｰﾗ	6	
-	23958-22081		ROLLER,END,144.0	ﾛｰﾗ	(6)	
13	02100-00050		RING,SNAP	ｽﾅｯﾌﾟﾘﾝｸﾞ	6	
A3	24319-40152		ROLLER-ASSY,SIDE	ｻｲﾄﾞﾛｰﾗｱｯｾﾝ	2	INC.14-16
14	22198-22341		ROLLER,END,91.5	ﾛｰﾗ	2	
15	02100-00030		RING,SNAP	ｽﾅｯﾌﾟﾘﾝｸﾞ	2	
16	24609-42131		SHAFT	ｼｬﾌﾄ	2	
17	01103-16065		BOLT	ﾎﾞﾙﾄ	4	
18	02011-00016		WASHER	ﾜｯｼｬ	4	
19	24609-42151		SHIM,T-1.0	ｼﾑ	8	
20	24609-42161		SHIM,T-0.2	ｼﾑ	8	
21	22198-22341		ROLLER,END,91.5	ﾛｰﾗ	2	
-	24258-33401		ROLLER,END,92.0	ﾛｰﾗ	(2)	
22	02100-00030		RING,SNAP	ｽﾅｯﾌﾟﾘﾝｸﾞ	2	
23	235H8-22301		BACKREST	ﾊﾞｯｸﾚｽﾄ	1	
24	01103-14030		BOLT	ﾎﾞﾙﾄ	8	
25	02011-00014		WASHER	ﾜｯｼｬ	8	
26	01184-12025		BOLT	ﾎﾞﾙﾄ	1	

FIG.173 MAST [VM35H]

(M4048350) マスト

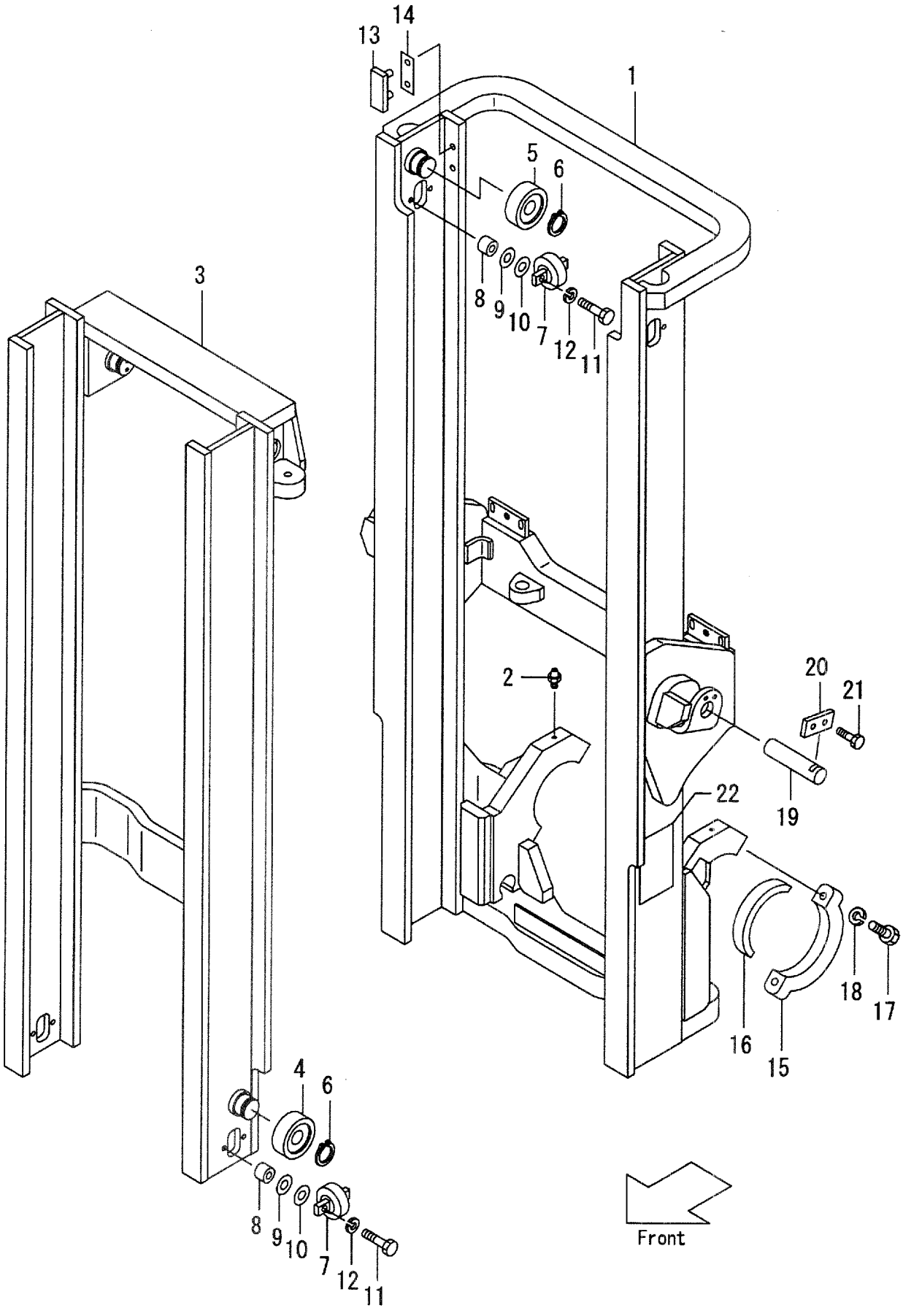

A:VM35H(FD50,FG50)

Item No	Part No.	Mark	Description	Req'd	Remarks : Serial No.
1	235H8-30011		MAST,OUTER VM250 アウタマスト	1	MAST NO.1-395
-	235H8-30012		MAST,OUTER VM250 アウタマスト	1	MAST NO.396-
-	235H8-30021		MAST,OUTER VM270 アウタマスト	1	MAST NO.1-395
-	235H8-30022		MAST,OUTER VM270 アウタマスト	1	MAST NO.396-
-	235H8-30031		MAST,OUTER VM275 アウタマスト	1	MAST NO.1-395
-	235H8-30032		MAST,OUTER VM275 アウタマスト	1	MAST NO.396-
-	235H8-30001		MAST,OUTER VM300 アウタマスト	1	MAST NO.1-395
-	235H8-30002		MAST,OUTER VM300 アウタマスト	1	MAST NO.396-
-	235H8-30041		MAST,OUTER VM325 アウタマスト	1	MAST NO.1-395
-	235H8-30042		MAST,OUTER VM325 アウタマスト	1	MAST NO.396-
-	235H8-30051		MAST,OUTER VM330 アウタマスト	1	MAST NO.1-395
-	235H8-30052		MAST,OUTER VM330 アウタマスト	1	MAST NO.396-
-	235H8-30061		MAST,OUTER VM350 アウタマスト	1	MAST NO.1-395
-	235H8-30062		MAST,OUTER VM350 アウタマスト	1	MAST NO.396-
-	235H8-30151		MAST,OUTER VM366 アウタマスト	1	MAST NO.1-395
-	235H8-30152		MAST,OUTER VM366 アウタマスト	1	MAST NO.396-
-	235H8-30161		MAST,OUTER VM370 アウタマスト	1	MAST NO.1-395
-	235H8-30162		MAST,OUTER VM370 アウタマスト	1	MAST NO.396-
-	235H8-30071		MAST,OUTER VM375 アウタマスト	1	MAST NO.1-395
-	235H8-30072		MAST,OUTER VM375 アウタマスト	1	MAST NO.396-
-	235H8-30081		MAST,OUTER VM400 アウタマスト	1	MAST NO.1-395
-	235H8-30082		MAST,OUTER VM400 アウタマスト	1	MAST NO.396-
-	235H8-30091		MAST,OUTER VM425 アウタマスト	1	MAST NO.1-395
-	235H8-30092		MAST,OUTER VM425 アウタマスト	1	MAST NO.396-
-	235H8-30101		MAST,OUTER VM450 アウタマスト	1	MAST NO.1-395
-	235H8-30102		MAST,OUTER VM450 アウタマスト	1	MAST NO.396-
-	235H8-30111		MAST,OUTER VM475 アウタマスト	1	MAST NO.1-395
-	235H8-30112		MAST,OUTER VM475 アウタマスト	1	MAST NO.396-
-	235H8-30121		MAST,OUTER VM500 アウタマスト	1	MAST NO.1-395
-	235H8-30122		MAST,OUTER VM500 アウタマスト	1	MAST NO.396-
-	235H8-30131		MAST,OUTER VM550 アウタマスト	1	MAST NO.1-395
-	235H8-30132		MAST,OUTER VM550 アウタマスト	1	MAST NO.396-
-	235H8-30141		MAST,OUTER VM600 アウタマスト	1	MAST NO.1-395
-	235H8-30142		MAST,OUTER VM600 アウタマスト	1	MAST NO.396-
-	535H3-91011		MAST,OUTER VM250 アウタマスト	1	MAST NO.1-395 [RW][HC][EXR]
-	535H3-91012		MAST,OUTER VM250 アウタマスト	1	MAST NO.396- [RW][HC][EXR]
-	535H3-91021		MAST,OUTER VM270 アウタマスト	1	MAST NO.1-395 [RW][HC][EXR]
-	535H3-91022		MAST,OUTER VM270 アウタマスト	1	MAST NO.396- [RW][HC][EXR]
-	535H3-91031		MAST,OUTER VM275 アウタマスト	1	MAST NO.1-395 [RW][HC][EXR]
-	535H3-91032		MAST,OUTER VM275 アウタマスト	1	MAST NO.396- [RW][HC][EXR]
-	535H3-91001		MAST,OUTER VM300 アウタマスト	1	MAST NO.1-395 [RW][HC][EXR]
-	535H3-91002		MAST,OUTER VM300 アウタマスト	1	MAST NO.396- [RW][HC][EXR]

FIG.173 MAST [VM35H]

(M4048350) マスト

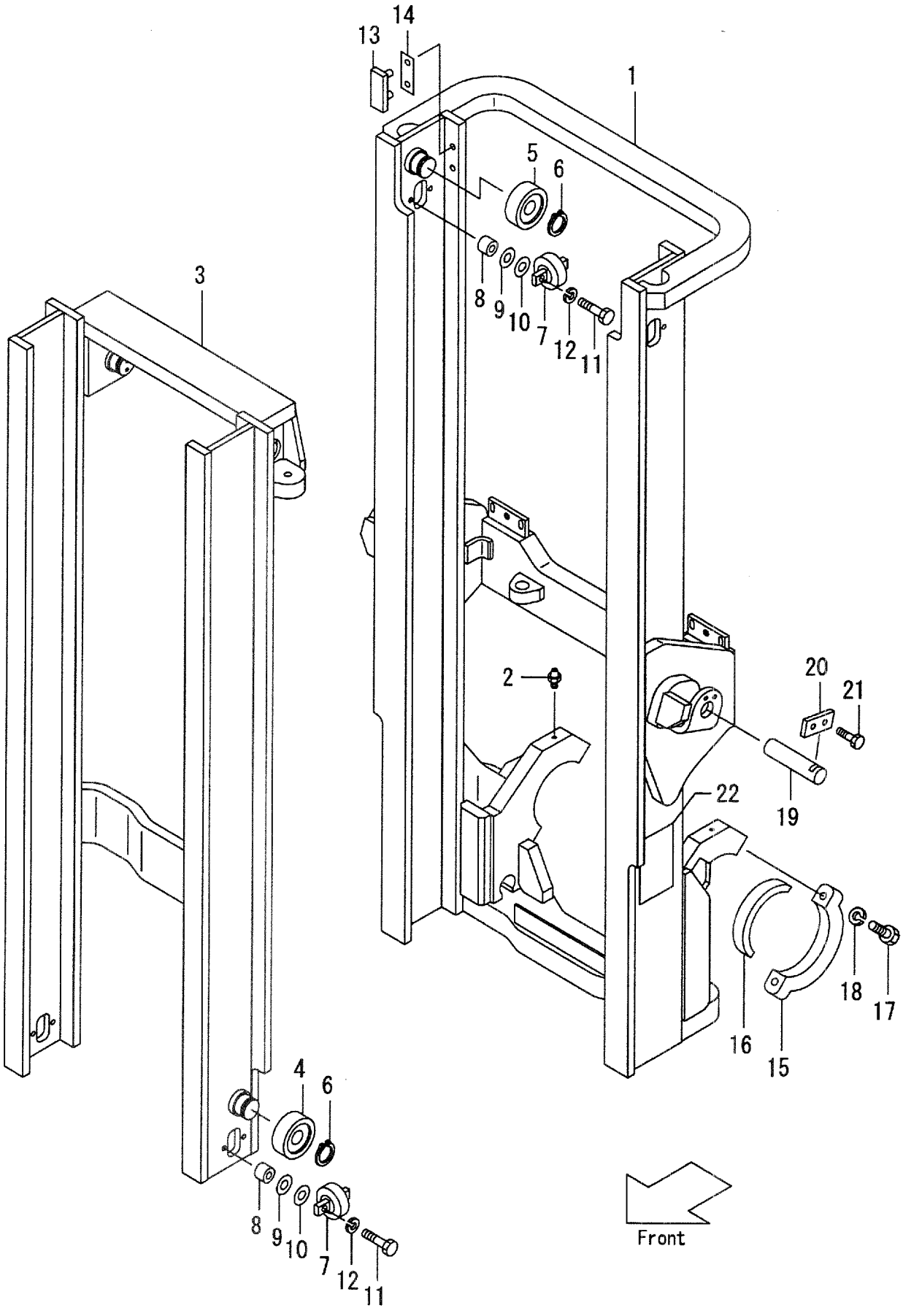

A:VM35H(FD50,FG50)

Item No	Part No.	Mark	Description	Req'd	Remarks : Serial No.
-	535H3-91041		MAST,OUTER VM325 アウタマスト	1	MAST NO.1-395 [RW][HC][EXR]
-	535H3-91042		MAST,OUTER VM325 アウタマスト	1	MAST NO.396- [RW][HC][EXR]
-	535H3-91051		MAST,OUTER VM330 アウタマスト	1	MAST NO.1-395 [RW][HC][EXR]
-	535H3-91052		MAST,OUTER VM330 アウタマスト	1	MAST NO.396- [RW][HC][EXR]
-	535H3-91061		MAST,OUTER VM350 アウタマスト	1	MAST NO.1-395 [RW][HC][EXR]
-	535H3-91062		MAST,OUTER VM350 アウタマスト	1	MAST NO.396- [RW][HC][EXR]
-	535H3-91071		MAST,OUTER VM366 アウタマスト	1	MAST NO.1-395 [RW][HC][EXR]
-	535H3-91072		MAST,OUTER VM366 アウタマスト	1	MAST NO.396- [RW][HC][EXR]
-	535H3-91081		MAST,OUTER VM370 アウタマスト	1	MAST NO.1-395 [RW][HC][EXR]
-	535H3-91082		MAST,OUTER VM370 アウタマスト	1	MAST NO.396- [RW][HC][EXR]
-	535H3-91091		MAST,OUTER VM375 アウタマスト	1	MAST NO.1-395 [RW][HC][EXR]
-	535H3-91092		MAST,OUTER VM375 アウタマスト	1	MAST NO.396- [RW][HC][EXR]
-	535H3-91101		MAST,OUTER VM400 アウタマスト	1	MAST NO.1-395 [RW][HC][EXR]
-	535H3-91102		MAST,OUTER VM400 アウタマスト	1	MAST NO.396- [RW][HC][EXR]
-	535H3-91111		MAST,OUTER VM425 アウタマスト	1	MAST NO.1-395 [RW][HC][EXR]
-	535H3-91112		MAST,OUTER VM425 アウタマスト	1	MAST NO.396- [RW][HC][EXR]
-	535H3-91121		MAST,OUTER VM450 アウタマスト	1	MAST NO.1-395 [RW][HC][EXR]
-	535H3-91122		MAST,OUTER VM450 アウタマスト	1	MAST NO.396- [RW][HC][EXR]
-	535H3-91131		MAST,OUTER VM475 アウタマスト	1	MAST NO.1-395 [RW][HC][EXR]
-	535H3-91132		MAST,OUTER VM475 アウタマスト	1	MAST NO.396- [RW][HC][EXR]
-	535H3-91141		MAST,OUTER VM500 アウタマスト	1	MAST NO.1-395 [RW][HC][EXR]
-	535H3-91142		MAST,OUTER VM500 アウタマスト	1	MAST NO.396- [RW][HC][EXR]
-	535H3-91151		MAST,OUTER VM550 アウタマスト	1	MAST NO.1-395 [RW][HC][EXR]
-	535H3-91152		MAST,OUTER VM550 アウタマスト	1	MAST NO.396- [RW][HC][EXR]
-	535H3-91161		MAST,OUTER VM600 アウタマスト	1	MAST NO.1-395 [RW][HC][EXR]

FIG.173 MAST [VM35H]

(M4048350) マスト

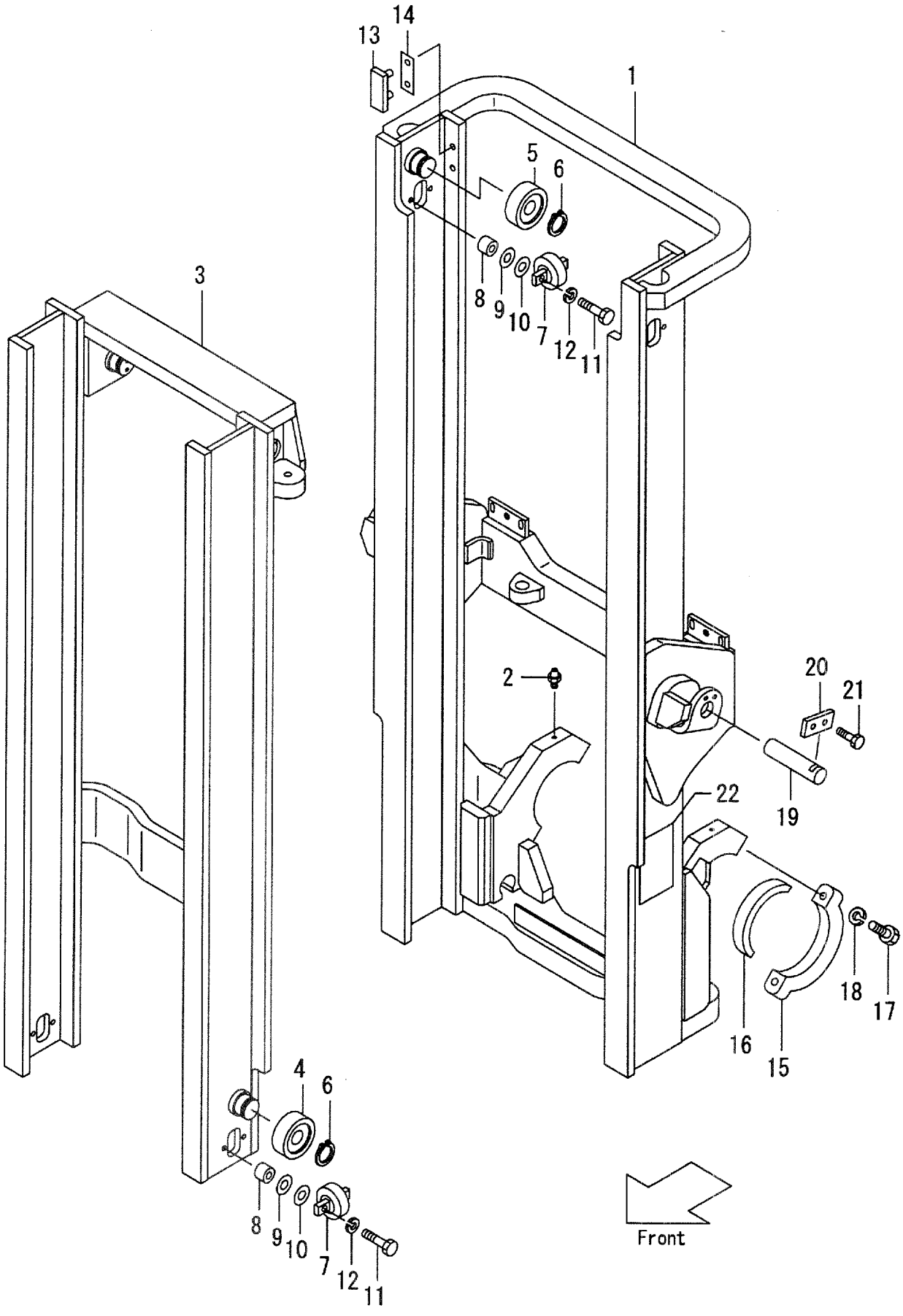

A:VM35H(FD50,FG50)

Item No	Part No.	Mark	Description		Req'd	Remarks : Serial No.
-	535H3-91162		MAST,OUTER VM600	アウタマスト	1	MAST NO.396- [RW][HC][EXR]
2	04901-00160		FITTING	フィッティング	2	
3	228C8-30231		MAST,INNER VM250	インナマスト	1	MAST NO.1-395
-	228C8-30232		MAST,INNER VM250	インナマスト	1	MAST NO.396-
-	235H8-30201		MAST,INNER VM270	インナマスト	1	MAST NO.1-395
-	235H8-30202		MAST,INNER VM270	インナマスト	1	MAST NO.396-
-	228C8-30201		MAST,INNER VM275	インナマスト	1	MAST NO.1-395
-	228C8-30202		MAST,INNER VM275	インナマスト	1	MAST NO.396-
-	228C8-30241		MAST,INNER VM300	インナマスト	1	MAST NO.1-395
-	228C8-30242		MAST,INNER VM300	インナマスト	1	MAST NO.396-
-	228C8-30261		MAST,INNER VM325	インナマスト	1	MAST NO.1-395
-	228C8-30262		MAST,INNER VM325	インナマスト	1	MAST NO.396-
-	235H8-30211		MAST,INNER VM330	インナマスト	1	MAST NO.1-395
-	235H8-30212		MAST,INNER VM330	インナマスト	1	MAST NO.396-
-	228C8-30291		MAST,INNER VM350	インナマスト	1	MAST NO.1-395
-	228C8-30292		MAST,INNER VM350	インナマスト	1	MAST NO.396-
-	235H8-30261		MAST,INNER VM366	インナマスト	1	MAST NO.1-395
-	235H8-30262		MAST,INNER VM366	インナマスト	1	MAST NO.396-
-	235H8-30271		MAST,INNER VM370	インナマスト	1	MAST NO.1-395
-	235H8-30272		MAST,INNER VM370	インナマスト	1	MAST NO.396-
-	235H8-30221		MAST,INNER VM375	インナマスト	1	MAST NO.1-395
-	235H8-30222		MAST,INNER VM375	インナマスト	1	MAST NO.396-
-	228C8-30311		MAST,INNER VM400	インナマスト	1	MAST NO.1-395
-	228C8-30312		MAST,INNER VM400	インナマスト	1	MAST NO.396-
-	228C8-30321		MAST,INNER VM425	インナマスト	1	MAST NO.1-395
-	228C8-30322		MAST,INNER VM425	インナマスト	1	MAST NO.396-
-	228C8-30331		MAST,INNER VM450	インナマスト	1	MAST NO.1-395
-	228C8-30332		MAST,INNER VM450	インナマスト	1	MAST NO.396-
-	228C8-30341		MAST,INNER VM475	インナマスト	1	MAST NO.1-395
-	228C8-30342		MAST,INNER VM475	インナマスト	1	MAST NO.396-
-	235H8-30231		MAST,INNER VM500	インナマスト	1	MAST NO.1-395
-	235H8-30232		MAST,INNER VM500	インナマスト	1	MAST NO.396-
-	235H8-30241		MAST,INNER VM550	インナマスト	1	MAST NO.1-395
-	235H8-30242		MAST,INNER VM550	インナマスト	1	MAST NO.396-
-	235H8-30251		MAST,INNER VM600	インナマスト	1	MAST NO.1-395
-	235H8-30252		MAST,INNER VM600	インナマスト	1	MAST NO.396-
4	23818-20701		ROLLER,END,143.5	ローラ	2	
-	23958-22081		ROLLER,END,144.0	ローラ	(2)	
5	23818-20701		ROLLER,END,143.5	ローラ	2	
6	02100-00050		RING,SNAP	スナップリング	4	
7	23818-30301		ROLLER,SIDE	ローラ	4	
8	23818-30071		SPACER	スペーサ	8	MAST NO.1-395
-	224T8-31111		SPACER	スペーサ	8	MAST NO.396-
9	22548-34051		SHIM,T-0.5	シム	16	
10	22548-34061		SHIM,T-1.0	シム	8	
11	01100-12045		BOLT	ボルト	8	
12	02010-00012		WASHER	ワッシャ	8	
13	22678-32001		SLIPPER	スリッパ	2	
14	22679-43231		SHIM	シム	4	

FIG.173 MAST [VM35H]

(M4048350) マスト

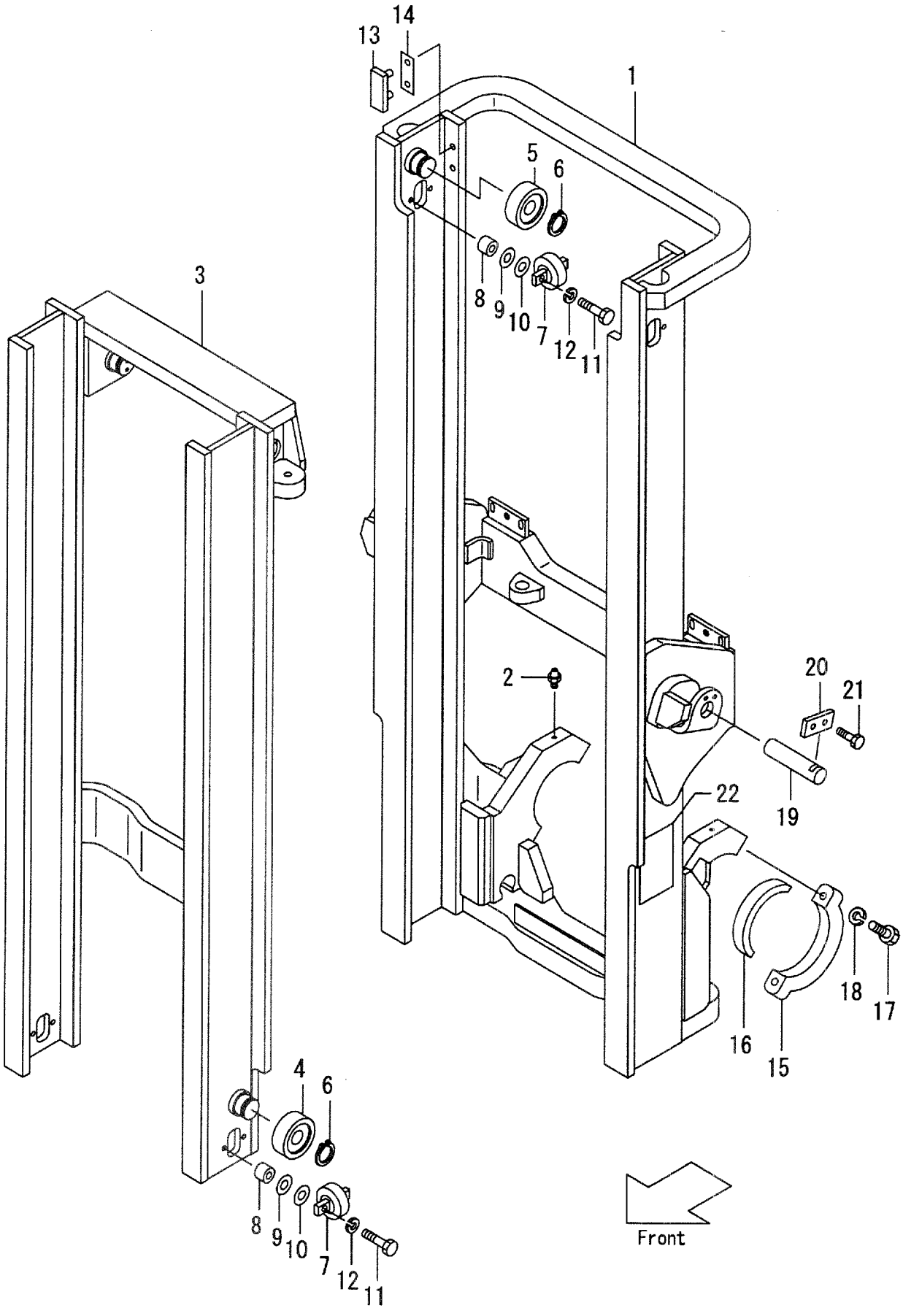

A:VM35H(FD50, FG50)

Item No	Part No.	Mark	Description		Req'd	Remarks : Serial No.
15	224T8-02201		CAP	ｷｬｯﾌﾟ	2	
16	224T8-02001		BUSHING	ﾌﾞｯｼﾝｸﾞ	2	
17	01103-20085		BOLT	ﾎﾞﾙﾄ	4	
18	02010-00020		WASHER	ﾜｯｼｬ	4	
19	224T8-52501		PIN	ﾋﾟﾝ	2	
20	23648-50161		PLATE	ﾌﾟﾚｰﾄ	2	
21	01184-10020		BOLT	ﾎﾞﾙﾄ	4	
22	23678-06002		PLATE,NAME	ﾌﾟﾚｰﾄ	1	

FIG.174 LAMP GUARD [(HL,BKH)/VM35H]

(M40483G0) ﾗﾝﾌﾟｶﾞｰﾄﾞ

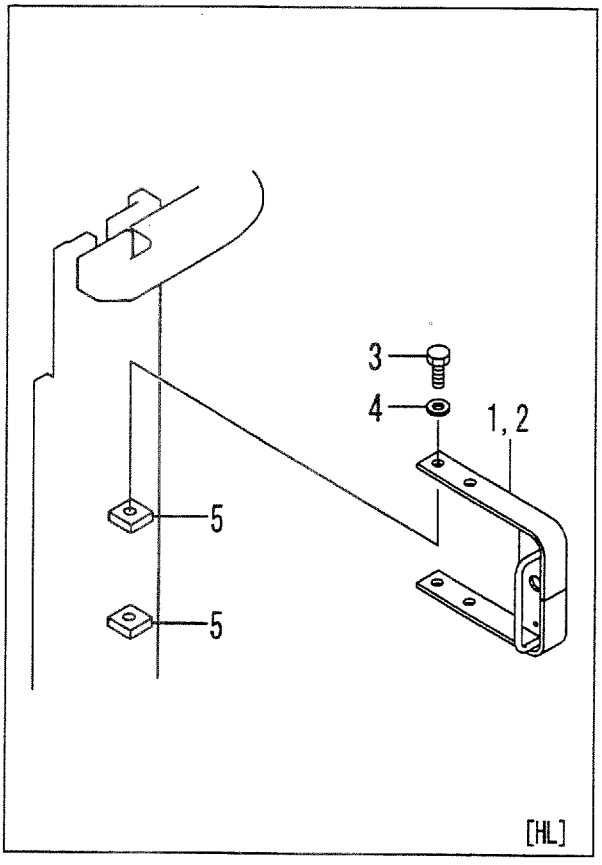

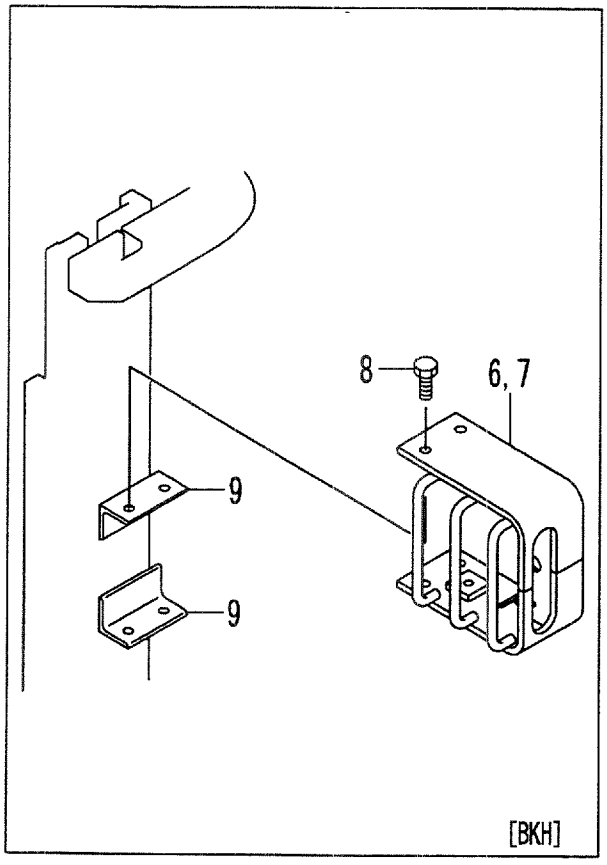

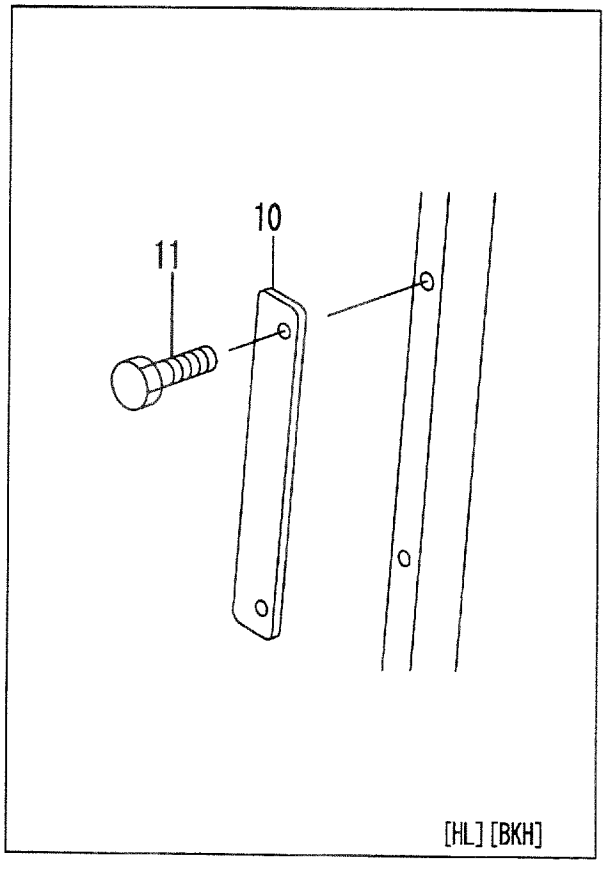

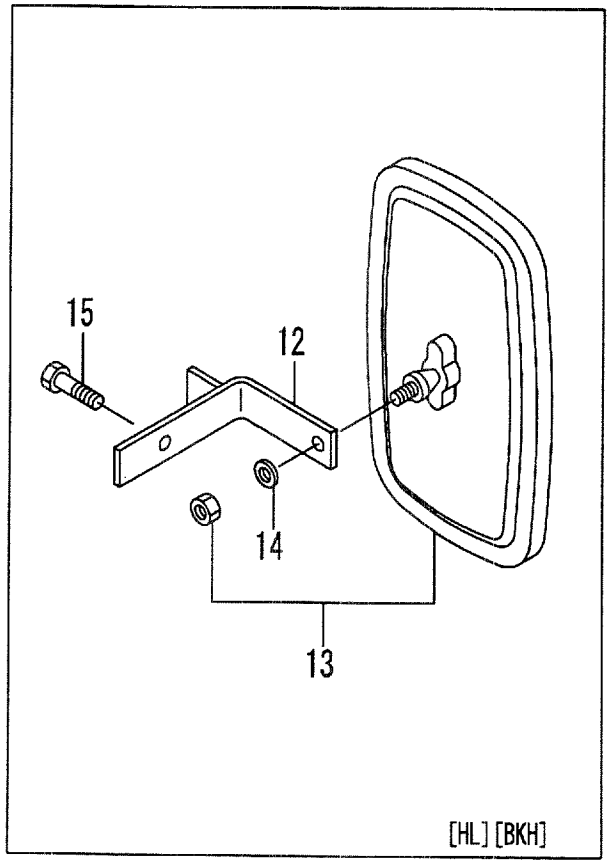

A:VM35H(FD50,FG50):515-

Item No	Part No.	Mark	Description		Req'd	Remarks : Serial No.
1	534A9-22011		BRACKET,LH	ﾌﾞﾗｹｯﾄ	1	[HL]
2	534A9-22001		BRACKET,RH	ﾌﾞﾗｹｯﾄ	1	[HL]
3	01100-12020		BOLT	ﾎﾞﾙﾄ	4	[HL]
4	02010-00012		WASHER	ﾜｯｼｬ	4	[HL]
5	534A9-22101		BLOCK,TAPPED	ﾌﾞﾛｯｸ	4	[HL]
6	534A4-22011		GUARD,LH	ｶﾞｰﾄﾞ	1	[BKH]
7	534A4-22001		GUARD,RH	ｶﾞｰﾄﾞ	1	[BKH]
8	01184-12020		BOLT & WASHER	ﾎﾞﾙﾄ&ﾜｯｼｬ	8	[BKH]
9	534A4-22101		BRACKET	ﾌﾞﾗｹｯﾄ	4	[BKH]
10	534A9-22301		PLATE	ﾌﾟﾚｰﾄ	2	[HL][BKH]
11	01100-08012		BOLT	ﾎﾞﾙﾄ	4	[HL][BKH]
12	535C9-22401		BRACKET	ﾌﾞﾗｹｯﾄ	2	[HL][BKH]
13	239A9-92001		MIRROR	ﾐﾗｰ	2	[HL][BKH]
14	222A9-32011		WASHER	ﾜｯｼｬ	2	[HL][BKH]
15	514A5-12021		BOLT	ﾎﾞﾙﾄ	2	[HL][BKH]
16	535C9-22301	+	WIRE-HARNESS	ﾜｲﾔﾊｰﾈｽ	2	[HL][BKH]
17	27732-42221	+	CLAMP	ｸﾗﾝﾌﾟ	4	[HL][BKH]
18	04913-11380	+	BAND	ﾊﾞﾝﾄﾞ	6	[HL][BKH]

FIG.175 LIFT CYLINDER [VM35H]

(M4048450) リフトシリンダ

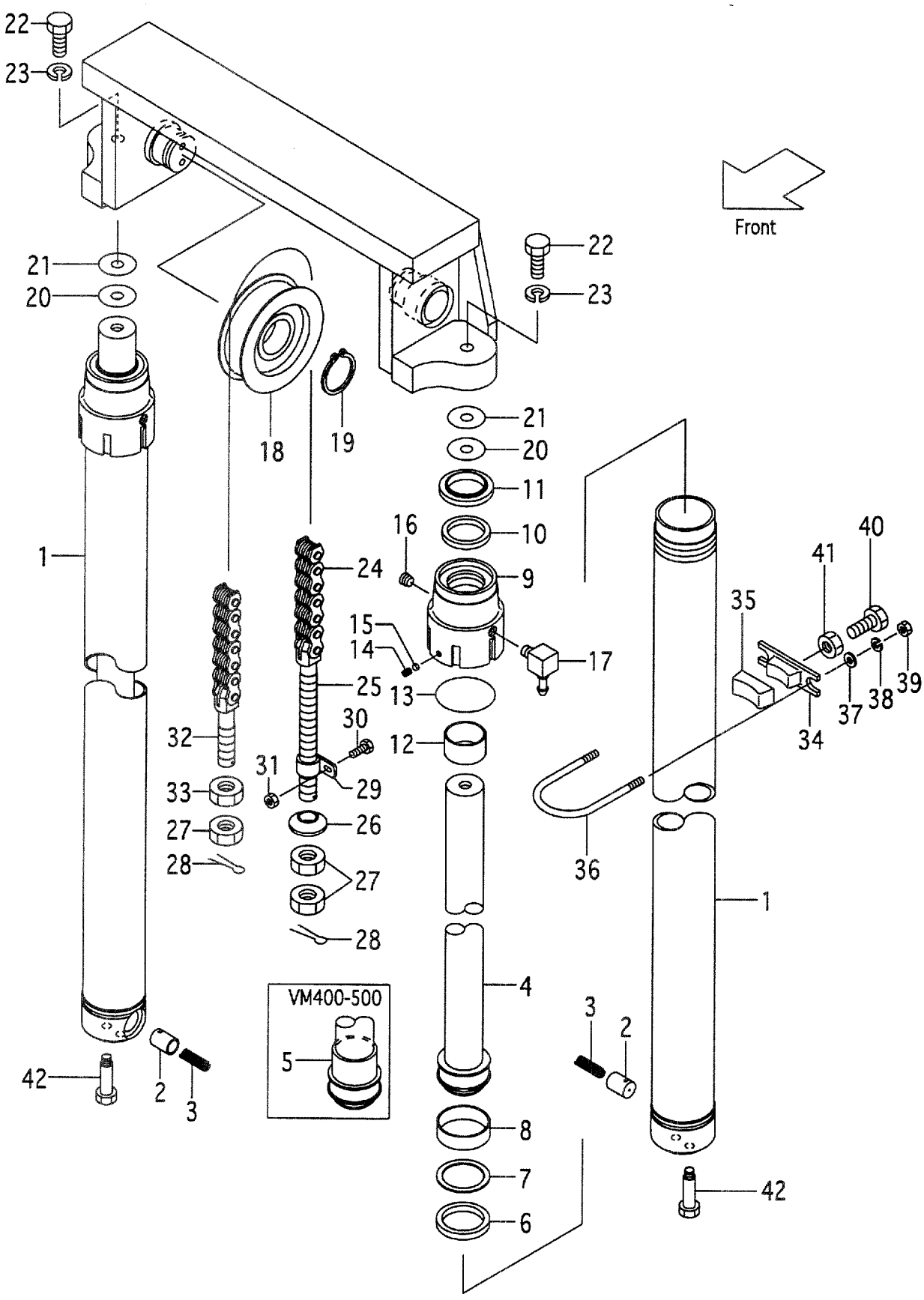

A:VM35H(FD50,FG50)

Item No	Part No.	Mark	Description		Req'd	Remarks : Serial No.
A1	235H8-40011		CYL-ASSY,LIFT VM250	ﾘﾌﾄｼﾘﾝﾀﾞｱｯｾﾝ	2	INC.1-17
-	235H8-40021		CYL-ASSY,LIFT VM270	ﾘﾌﾄｼﾘﾝﾀﾞｱｯｾﾝ	2	INC.1-17
-	235H8-40031		CYL-ASSY,LIFT VM275	ﾘﾌﾄｼﾘﾝﾀﾞｱｯｾﾝ	2	INC.1-17
-	235H8-40001		CYL-ASSY,LIFT VM300	ﾘﾌﾄｼﾘﾝﾀﾞｱｯｾﾝ	2	INC.1-17
-	235H8-40041		CYL-ASSY,LIFT VM325	ﾘﾌﾄｼﾘﾝﾀﾞｱｯｾﾝ	2	INC.1-17
-	235H8-40051		CYL-ASSY,LIFT VM330	ﾘﾌﾄｼﾘﾝﾀﾞｱｯｾﾝ	2	INC.1-17
-	235H8-40061		CYL-ASSY,LIFT VM350	ﾘﾌﾄｼﾘﾝﾀﾞｱｯｾﾝ	2	INC.1-17
-	235H8-40151		CYL-ASSY,LIFT VM366	ﾘﾌﾄｼﾘﾝﾀﾞｱｯｾﾝ	2	INC.1-17
-	235H8-40161		CYL-ASSY,LIFT VM370	ﾘﾌﾄｼﾘﾝﾀﾞｱｯｾﾝ	2	INC.1-17
-	235H8-40071		CYL-ASSY,LIFT VM375	ﾘﾌﾄｼﾘﾝﾀﾞｱｯｾﾝ	2	INC.1-17
-	235H8-40081		CYL-ASSY,LIFT VM400	ﾘﾌﾄｼﾘﾝﾀﾞｱｯｾﾝ	2	INC.1-17
-	235H8-40091		CYL-ASSY,LIFT VM425	ﾘﾌﾄｼﾘﾝﾀﾞｱｯｾﾝ	2	INC.1-17
-	235H8-40101		CYL-ASSY,LIFT VM450	ﾘﾌﾄｼﾘﾝﾀﾞｱｯｾﾝ	2	INC.1-17
-	235H8-40111		CYL-ASSY,LIFT VM475	ﾘﾌﾄｼﾘﾝﾀﾞｱｯｾﾝ	2	INC.1-17
-	235H8-40121		CYL-ASSY,LIFT VM500	ﾘﾌﾄｼﾘﾝﾀﾞｱｯｾﾝ	2	INC.1-17
-	235H8-40131		CYL-ASSY,LIFT VM550	ﾘﾌﾄｼﾘﾝﾀﾞｱｯｾﾝ	2	INC.1-17
-	235H8-40141		CYL-ASSY,LIFT VM600	ﾘﾌﾄｼﾘﾝﾀﾞｱｯｾﾝ	2	INC.1-17
1	228C8-40211		TUBE VM250	ﾁｭｰﾌﾞ	2	
-	228C8-40221		TUBE VM270	ﾁｭｰﾌﾞ	2	
-	228C8-40231		TUBE VM275	ﾁｭｰﾌﾞ	2	
-	228C8-40201		TUBE VM300	ﾁｭｰﾌﾞ	2	
-	228C8-40241		TUBE VM325	ﾁｭｰﾌﾞ	2	
-	228C8-40251		TUBE VM330	ﾁｭｰﾌﾞ	2	
-	228C8-40261		TUBE VM350	ﾁｭｰﾌﾞ	2	
-	228C8-40271		TUBE VM366	ﾁｭｰﾌﾞ	2	
-	228C8-40281		TUBE VM370	ﾁｭｰﾌﾞ	2	
-	228C8-40291		TUBE VM375	ﾁｭｰﾌﾞ	2	
-	228C8-40301		TUBE VM400	ﾁｭｰﾌﾞ	2	
-	228C8-40311		TUBE VM425	ﾁｭｰﾌﾞ	2	
-	228C8-40321		TUBE VM450	ﾁｭｰﾌﾞ	2	
-	228C8-40331		TUBE VM475	ﾁｭｰﾌﾞ	2	
-	228C8-40341		TUBE VM500	ﾁｭｰﾌﾞ	2	
-	228C8-40351		TUBE VM550	ﾁｭｰﾌﾞ	2	
-	228C8-40361		TUBE VM600	ﾁｭｰﾌﾞ	2	
2	228C8-42801		PISTON	ﾋﾟｽﾄﾝ	2	
3	25908-44281		SPRING	ｽﾌﾟﾘﾝｸﾞ	2	
4	228C8-40431		ROD,PISTON VM250	ﾛｯﾄﾞ	2	
-	235H8-40201		ROD,PISTON VM270	ﾛｯﾄﾞ	2	
-	228C8-40401		ROD,PISTON VM275	ﾛｯﾄﾞ	2	
-	228C8-40441		ROD,PISTON VM300	ﾛｯﾄﾞ	2	
-	228C8-40461		ROD,PISTON VM325	ﾛｯﾄﾞ	2	
-	235H8-40211		ROD,PISTON VM330	ﾛｯﾄﾞ	2	
-	228C8-40491		ROD,PISTON VM350	ﾛｯﾄﾞ	2	
-	235H8-40261		ROD,PISTON VM366	ﾛｯﾄﾞ	2	
-	235H8-40271		ROD,PISTON VM370	ﾛｯﾄﾞ	2	
-	235H8-40221		ROD,PISTON VM375	ﾛｯﾄﾞ	2	
-	228C8-40511		ROD,PISTON VM400	ﾛｯﾄﾞ	2	
-	228C8-40521		ROD,PISTON VM425	ﾛｯﾄﾞ	2	
-	228C8-40531		ROD,PISTON VM450	ﾛｯﾄﾞ	2	
-	228C8-40541		ROD,PISTON VM475	ﾛｯﾄﾞ	2	

FIG.175 LIFT CYLINDER [VM35H]

(M4048450) リフトシリンダ

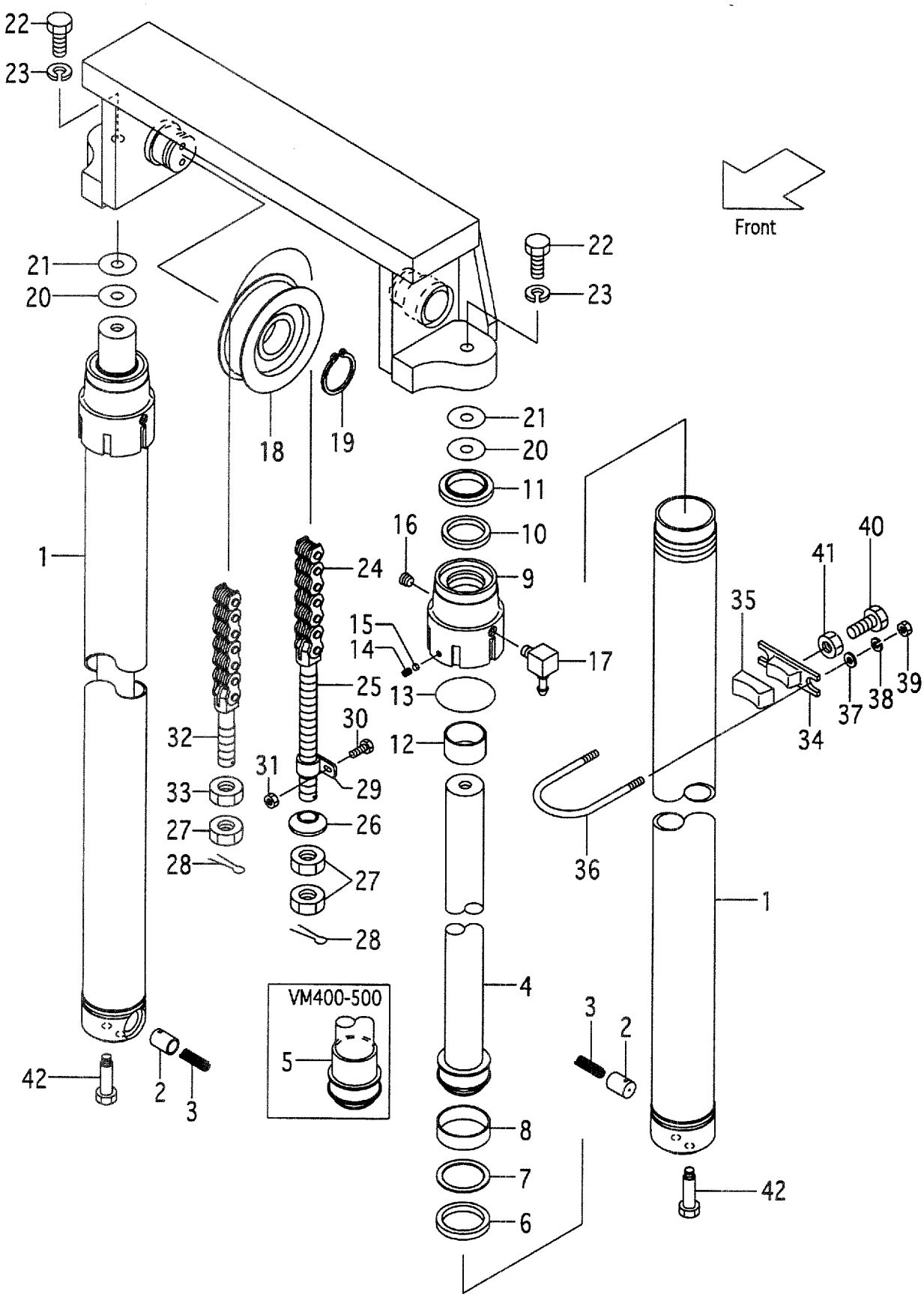

A:VM35H(FD50,FG50)

Item No	Part No.	Mark	Description		Req'd	Remarks : Serial No.
-	235H8-40231		ROD,PISTON VM500	ﾛｯﾄﾞ	2	
-	235H8-40241		ROD,PISTON VM550	ﾛｯﾄﾞ	2	
-	235H8-40251		ROD,PISTON VM600	ﾛｯﾄﾞ	2	
5	224T8-42471		SPACER	ｽﾍﾟｰｻ	2	(VM400-500)
-	224T8-42481		SPACER	ｽﾍﾟｰｻ	2	(VM550-600)
6	22580-82471	*	PACKING	ﾊﾟｯｷﾝｸﾞ	2	
7	228C8-42541	*	RING,BACK-UP	ﾘﾝｸﾞ	2	
8	22580-82461	*	WEARING	ｳｴｱﾘﾝｸﾞ	2	
9	228C8-42401		CAP	ｷｬｯﾌﾟ	2	
10	224T8-46011	*	PACKING	ﾊﾟｯｷﾝｸﾞ	2	
11	224T8-46001	*	SEAL,DUST	ｼｰﾙ	2	
12	23460-53171		BUSHING	ﾌﾞｯｼﾝｸﾞ	2	
13	03340-00130	*	O-RING	Oﾘﾝｸﾞ	2	
14	25908-44101		PLUG	ﾌﾟﾗｸﾞ	2	
15	25908-44111		PLUG,NYLON	ﾌﾟﾗｸﾞ	2	
16	24329-45541		PLUG	ﾌﾟﾗｸﾞ	2	
17	24329-45531		ELBOW	ｴﾙﾎﾞ	2	
18	24609-41241		SHEAVE	ｼｰﾌﾞ	2	
19	02100-00050		RING,SNAP	ｽﾅｯﾌﾟﾘﾝｸﾞ	2	
20	24319-45781		SHIM,T-0.2	ｼﾑ	4	
21	24319-45791		SHIM,T-1.0	ｼﾑ	2	
22	01103-16045		BOLT	ﾎﾞﾙﾄ	2	
23	02011-00016		WASHER	ﾜｯｼｬ	2	
24	23918-45971		CHAIN,LEAF VM250	ﾁｪｰﾝ	2	
-	23918-46051		CHAIN,LEAF VM270	ﾁｪｰﾝ	2	
-	23918-46071		CHAIN,LEAF VM275	ﾁｪｰﾝ	2	
-	23918-46171		CHAIN,LEAF VM300	ﾁｪｰﾝ	2	
-	23918-46271		CHAIN,LEAF VM325	ﾁｪｰﾝ	2	
-	23918-46291		CHAIN,LEAF VM330	ﾁｪｰﾝ	2	
-	23918-46371		CHAIN,LEAF VM350	ﾁｪｰﾝ	2	
-	23918-46431		CHAIN,LEAF VM366	ﾁｪｰﾝ	2	
-	23918-46451		CHAIN,LEAF VM370	ﾁｪｰﾝ	2	
-	23918-46471		CHAIN,LEAF VM375	ﾁｪｰﾝ	2	
-	23918-46191		CHAIN,LEAF VM400	ﾁｪｰﾝ	2	
-	23918-46251		CHAIN,LEAF VM425	ﾁｪｰﾝ	2	
-	23918-46291		CHAIN,LEAF VM450	ﾁｪｰﾝ	2	
-	23918-46391		CHAIN,LEAF VM475	ﾁｪｰﾝ	2	
-	23918-46491		CHAIN,LEAF VM500	ﾁｪｰﾝ	2	
-	23918-46511		CHAIN,LEAF VM550	ﾁｪｰﾝ	2	
-	23918-46611		CHAIN,LEAF VM600	ﾁｪｰﾝ	2	
25	24329-45441		PIN	ﾋﾟﾝ	2	
26	24319-45751		CORN	ｺｰﾝ	2	
27	01402-00022		NUT	ﾅｯﾄ	6	
28	02200-03040		PIN,COTTER	ﾋﾟﾝ	4	
29	224T8-42621		CLIP	ｸﾘｯﾌﾟ	2	
30	01183-06016		BOLT	ﾎﾞﾙﾄ	2	
31	01400-00006		NUT	ﾅｯﾄ	2	
32	23918-42681		PIN	ﾋﾟﾝ	2	
33	23818-30271		NUT	ﾅｯﾄ	2	
34	224T8-42711		SUPPORT	ｻﾎﾟｰﾄ	2	(VM250-550)

FIG.175 LIFT CYLINDER [VM35H]

(M4048450) リフトシリンダ

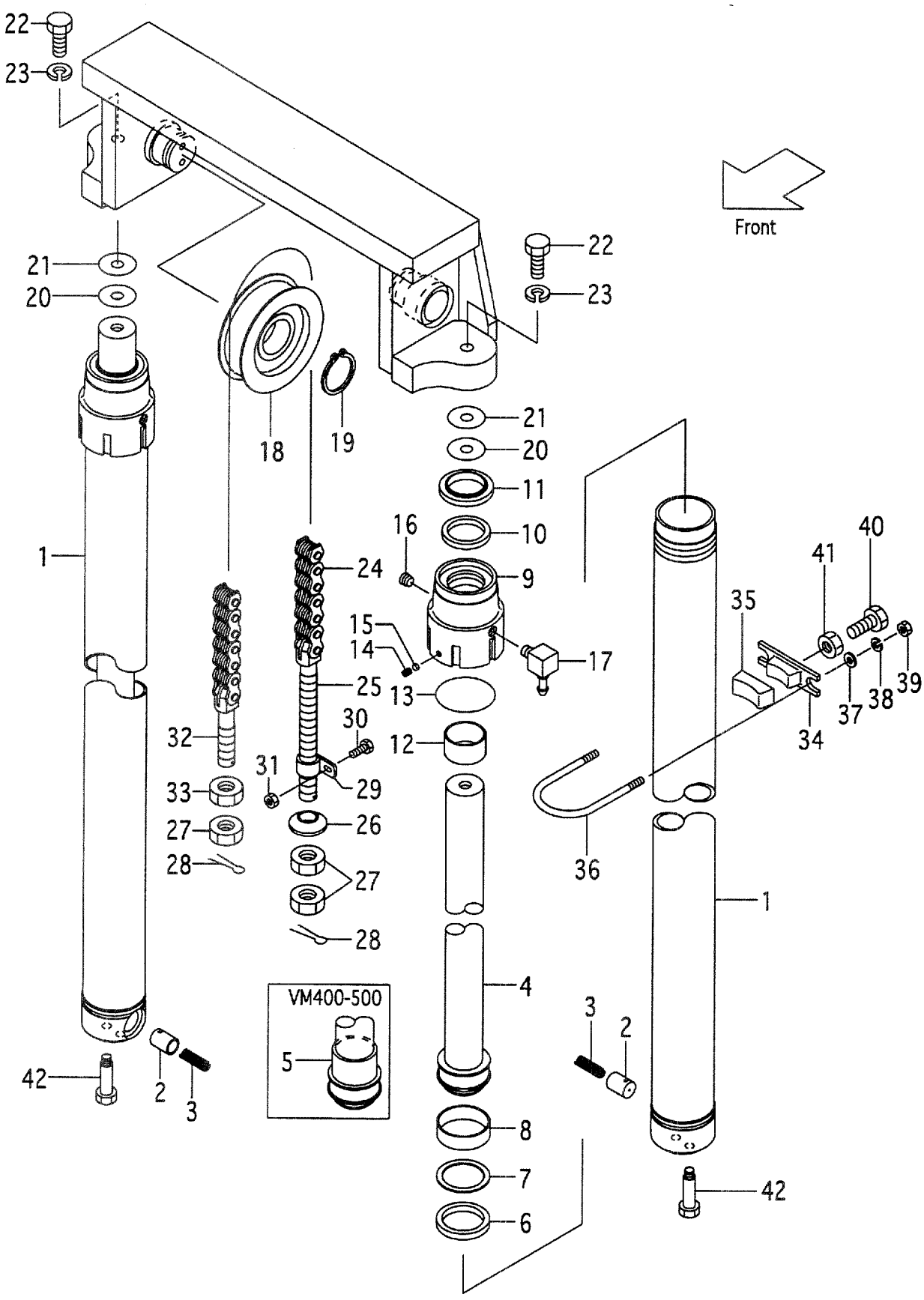

A:VM35H(FD50,FG50)

Item No	Part No.	Mark	Description		Req'd	Remarks : Serial No.
-	224T8-42711		SUPPORT	ｻﾎﾟｰﾄ	4	(VM600)
35	214A8-42631		RUBBER	ﾗﾊﾞｰ	2	(VM250-550)
-	214A8-42631		RUBBER	ﾗﾊﾞｰ	4	(VM600)
36	228C8-42701		U-BOLT	Uﾎﾞﾙﾄ	2	(VM250-550)
-	228C8-42701		U-BOLT	Uﾎﾞﾙﾄ	4	(VM600)
37	02000-00010		WASHER	ﾜｯｼｬ	4	(VM250-550)
-	02000-00010		WASHER	ﾜｯｼｬ	8	(VM600)
38	02010-00010		WASHER	ﾜｯｼｬ	4	(VM250-550)
-	02010-00010		WASHER	ﾜｯｼｬ	8	(VM600)
39	01400-00010		NUT	ﾅｯﾄ	4	(VM250-550)
-	01400-00010		NUT	ﾅｯﾄ	8	(VM600)
40	01120-16040		BOLT	ﾎﾞﾙﾄ	2	(VM250-550)
-	01120-16040		BOLT	ﾎﾞﾙﾄ	4	(VM600)
41	01402-00016		NUT	ﾅｯﾄ	2	(VM250-550)
-	01402-00016		NUT	ﾅｯﾄ	4	(VM600)
42	235H8-40501		BOLT	ﾎﾞﾙﾄ	2	
K1	228C8-49803		KIT,OVERHAUL	ｵｰﾊﾞｰﾎｰﾙｷｯﾄ	2	INC.6-8,10,11,13

FIG.176 MAST PIPING [VM35H]

(M40484A0) マストパイピング

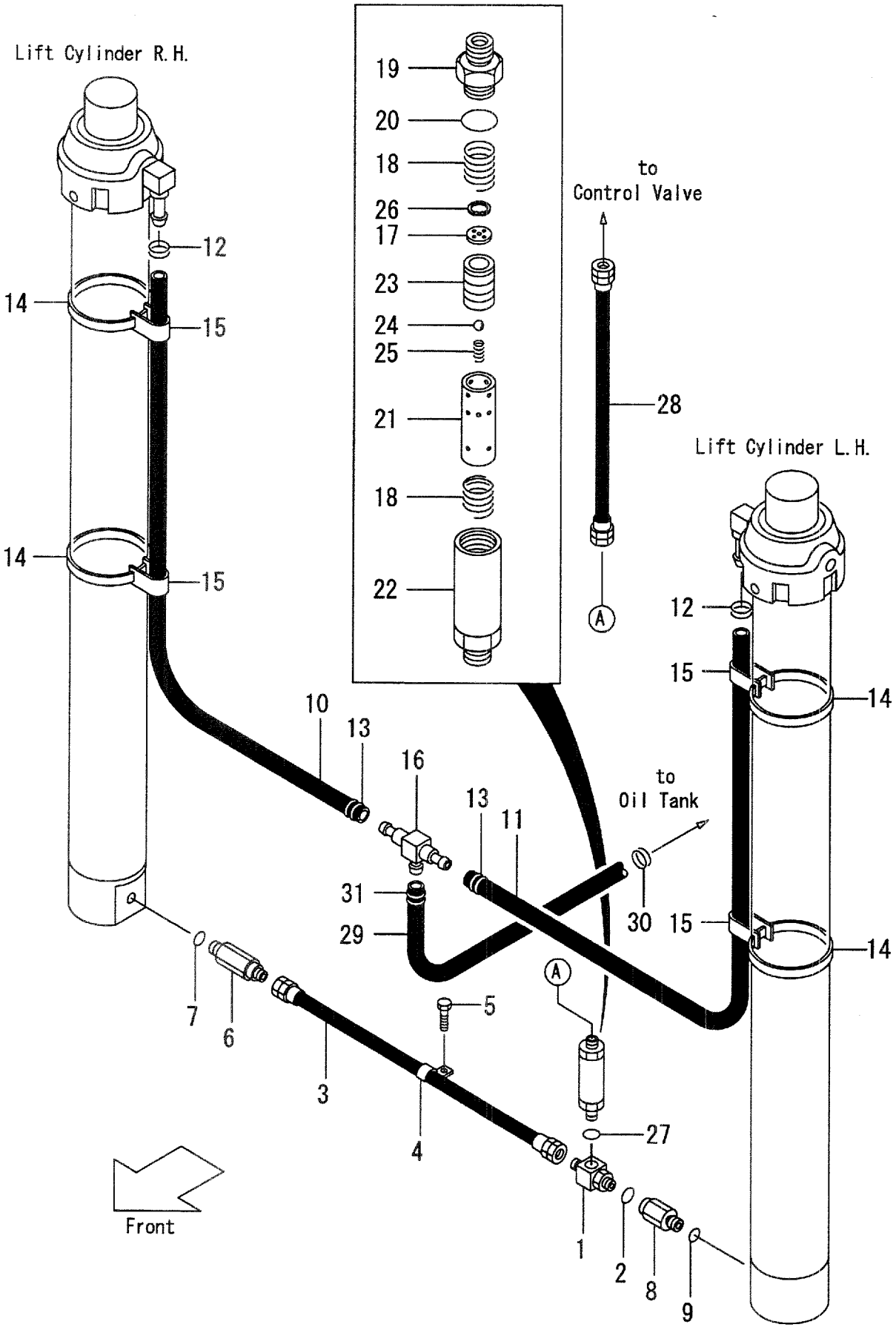

A:VM35H(FD50,FG50)

Item No	Part No.	Mark	Description		Req'd	Remarks : Serial No.
A1	24609-43682		THREE-WAY-ASSY	ｽﾘｰｳｪｲｱｯｾﾝ	1	INC.1,2
1	NO PART NO.	#	THREE-WAY	ｽﾘｰｳｴｲ	1	
2	03320-00180		O-RING	Oﾘﾝｸﾞ	1	
3	224T8-42861		HOSE,HP	ﾎｰｽ	1	
4	214A8-43081		CLIP	ｸﾘｯﾌﾟ	1	
5	01184-10020		BOLT	ﾎﾞﾙﾄ	1	
A2	224T8-44001		NIPPLE-ASSY	ﾆｯﾌﾟﾙｱｯｾﾝ	1	INC.6,7
6	NO PART NO.	#	NIPPLE	ﾆｯﾌﾟﾙ	1	
7	03320-00240		O-RING	Oﾘﾝｸﾞ	1	
A3	224T8-44021		NIPPLE-ASSY	ﾆｯﾌﾟﾙｱｯｾﾝ	1	INC.8,9
8	NO PART NO.	#	NIPPLE	ﾆｯﾌﾟﾙ	1	
9	03320-00240		O-RING	Oﾘﾝｸﾞ	1	
10	24328-40080		HOSE,RH VM250	ﾎｰｽ	1	
-	24328-40090		HOSE,RH VM270	ﾎｰｽ	1	
-	24328-40095		HOSE,RH VM275	ﾎｰｽ	1	
-	24328-40105		HOSE,RH VM300	ﾎｰｽ	1	
-	24328-40120		HOSE,RH VM325	ﾎｰｽ	1	
-	24328-40120		HOSE,RH VM330	ﾎｰｽ	1	
-	24328-40130		HOSE,RH VM350	ﾎｰｽ	1	
-	24328-40140		HOSE,RH VM366	ﾎｰｽ	1	
-	24328-40145		HOSE,RH VM375	ﾎｰｽ	1	
-	24328-40160		HOSE,RH VM400	ﾎｰｽ	1	
-	24328-40175		HOSE,RH VM425	ﾎｰｽ	1	
-	24328-40185		HOSE,RH VM450	ﾎｰｽ	1	
-	24328-40200		HOSE,RH VM475	ﾎｰｽ	1	
-	24328-40210		HOSE,RH VM500	ﾎｰｽ	1	
-	24328-40240		HOSE,RH VM550	ﾎｰｽ	1	
-	24328-40265		HOSE,RH VM600	ﾎｰｽ	1	
11	24328-40130		HOSE,LH VM250	ﾎｰｽ	1	
-	24328-40140		HOSE,LH VM270	ﾎｰｽ	1	
-	24328-40145		HOSE,LH VM275	ﾎｰｽ	1	
-	24328-40155		HOSE,LH VM300	ﾎｰｽ	1	
-	24328-40170		HOSE,LH VM325	ﾎｰｽ	1	
-	24328-40170		HOSE,LH VM330	ﾎｰｽ	1	
-	24328-40180		HOSE,LH VM350	ﾎｰｽ	1	
-	24328-40190		HOSE,LH VM366	ﾎｰｽ	1	
-	24328-40195		HOSE,LH VM375	ﾎｰｽ	1	
-	24328-40210		HOSE,LH VM400	ﾎｰｽ	1	
-	24328-40225		HOSE,LH VM425	ﾎｰｽ	1	
-	24328-40235		HOSE,LH VM450	ﾎｰｽ	1	
-	24328-40250		HOSE,LH VM475	ﾎｰｽ	1	
-	24328-40260		HOSE,LH VM500	ﾎｰｽ	1	
-	24328-40290		HOSE,LH VM550	ﾎｰｽ	1	
-	24328-40315		HOSE,LH VM600	ﾎｰｽ	1	
12	04911-00022		CLIP	ｸﾘｯﾌﾟ	2	
13	24329-46201		CLIP	ｸﾘｯﾌﾟ	2	
14	23678-42411		BAND	ﾊﾞﾝﾄﾞ	4	
15	53675-54101		BAND	ﾊﾞﾝﾄﾞ	4	
16	24329-46052		THREE-WAY	ｽﾘｰｳｴｲ	1	
A4	228C8-41002		REGULATOR-ASSY,FLOW	ﾚｷﾞｭﾚｰﾀｱｯｾﾝ	1	INC.17-26

FIG.176 MAST PIPING [VM35H]

(M40484A0) マストパイピング

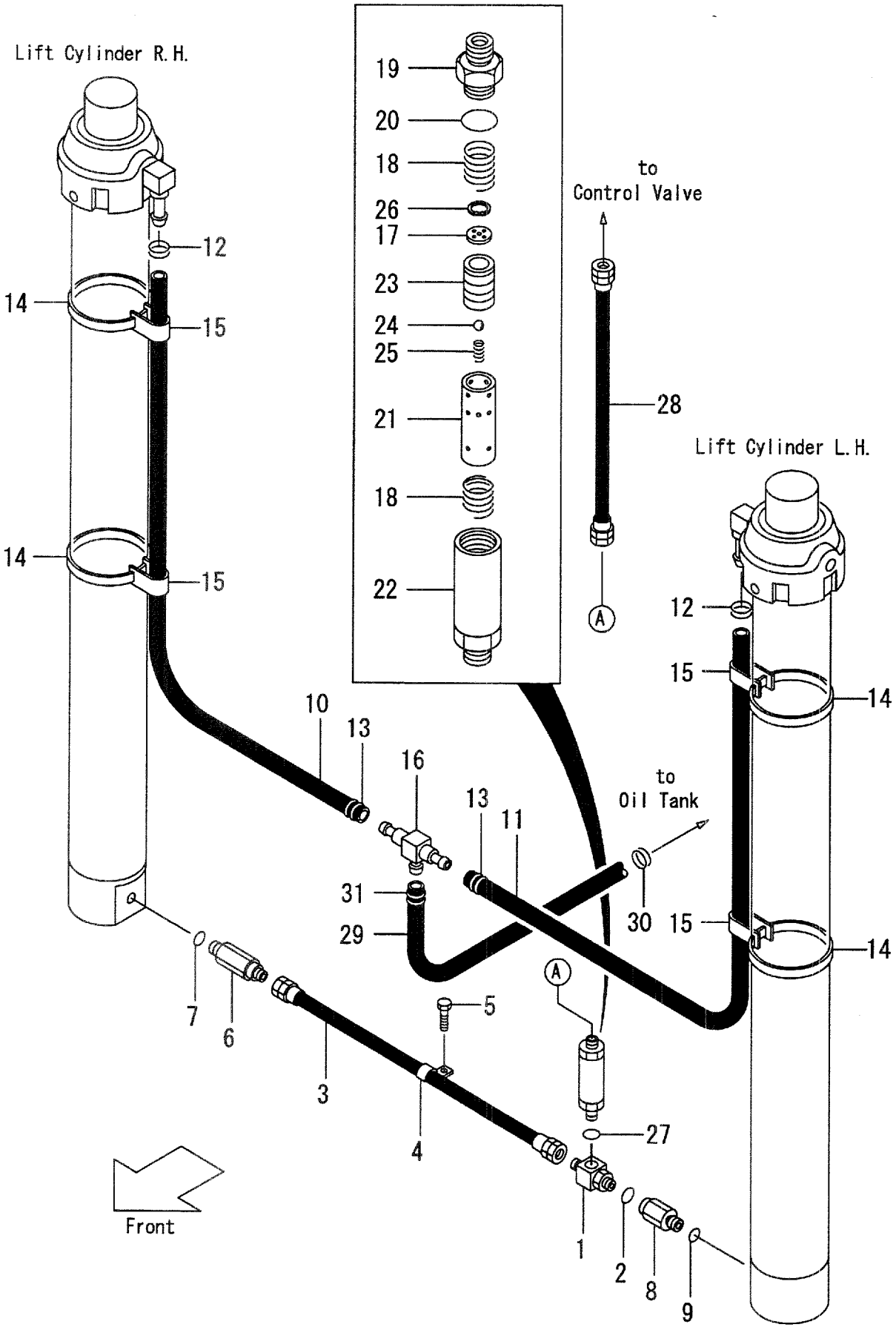

A:VM35H(FD50, FG50)

Item No	Part No.	Mark	Description		Req'd	Remarks : Serial No.
17	NO PART NO.	#	PLATE,ORIFICE	ﾌﾟﾚｰﾄ	1	
18	24609-43631		SPRING	ｽﾌﾟﾘﾝｸﾞ	2	
19	NO PART NO.	#	NIPPLE	ﾆｯﾌﾟﾙ	1	
20	03300-00360		O-RING	Oﾘﾝｸﾞ	1	
21	NO PART NO.	#	SLEEVE	ｽﾘｰﾌﾞ	1	
22	NO PART NO.	#	CASE	ｹｰｽ	1	
23	NO PART NO.	#	PISTON	ﾋﾟｽﾄﾝ	1	
24	24459-42951		BALL	ﾎﾞｰﾙ	1	
25	214A8-44151		SPRING	ｽﾌﾟﾘﾝｸﾞ	1	
26	02110-00020		RING,SNAP	ｽﾅｯﾌﾟﾘﾝｸﾞ	1	
27	03320-00240		O-RING	Oﾘﾝｸﾞ	1	
28	224T8-02101		HOSE,HP	ﾎｰｽ	1	
29	04710-06113		HOSE,LP	ﾎｰｽ	1	
30	04911-00032		CLIP	ｸﾘｯﾌﾟ	1	
31	24329-46211		CLIP	ｸﾘｯﾌﾟ	1	

FIG.177 FORK & LIFT BRACKET [VFM24T](3CYLINDER)

(M4040610) フォーク&リフトブラケット

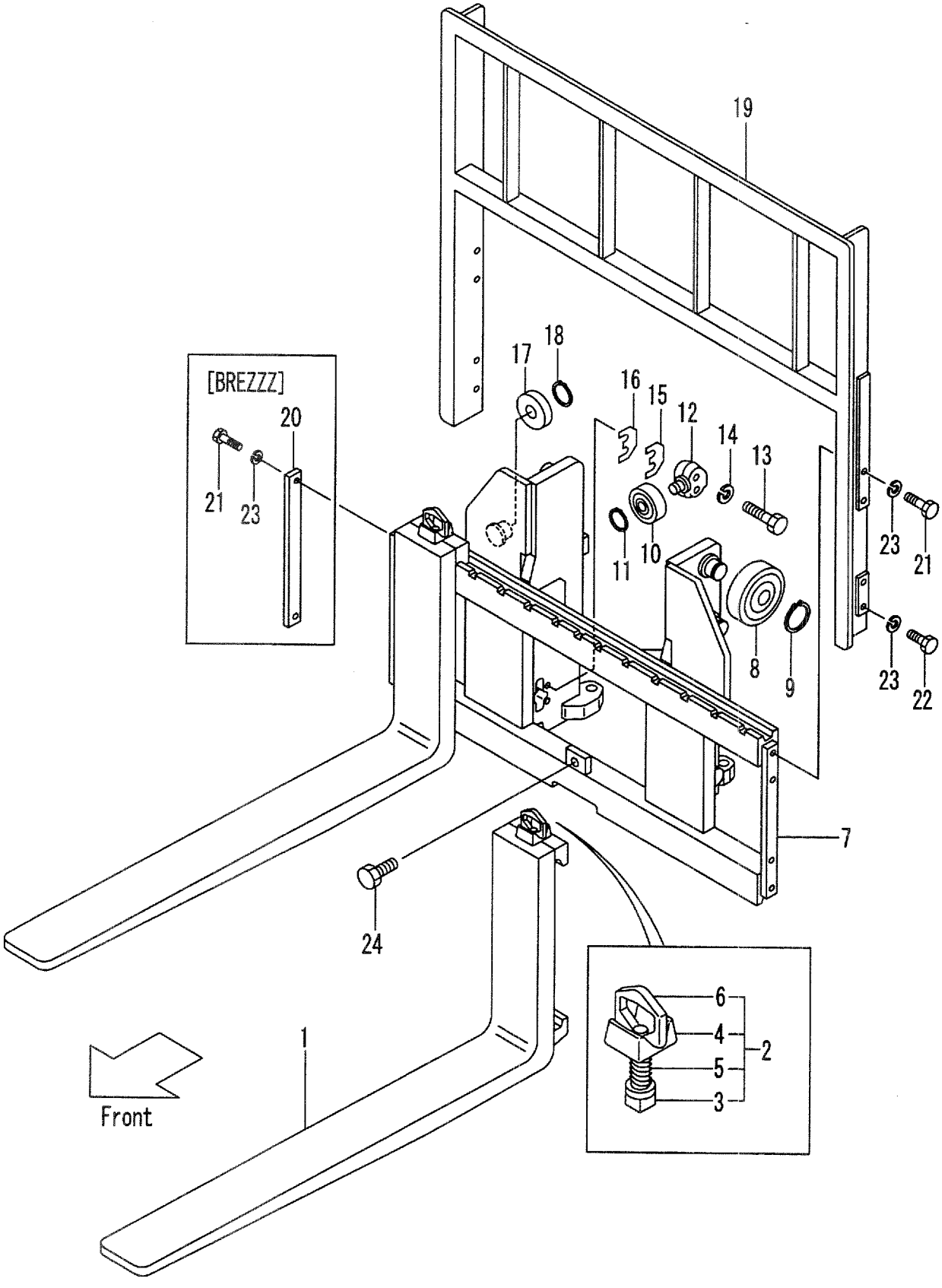

A:VFM24T(FD35,40,FG35,40)

Item No	Part No.	Mark	Description		Req'd	Remarks : Serial No.
1	24328-10513		FORK	ﾌｫｰｸ	2	MAST NO.1-99 (L=1070) INC.3-6
-	24328-10514		FORK	ﾌｫｰｸ	2	MAST NO.100- (L=1070) INC.3-6
-	24328-10503		FORK	ﾌｫｰｸ	2	[LF100] INC.3-6
-	24328-10514		FORK	ﾌｫｰｸ	2	[LF107] INC.3-6
-	24328-10523		FORK	ﾌｫｰｸ	2	[LF110] INC.3-6
-	24328-10533		FORK	ﾌｫｰｸ	2	[LF120] INC.3-6
-	24328-10543		FORK	ﾌｫｰｸ	2	MAST NO.1-99 [LF122] INC.3-6
-	24328-10544		FORK	ﾌｫｰｸ	2	MAST NO.100- [LF122] INC.3-6
-	24328-12303		FORK	ﾌｫｰｸ	2	MAST NO.1-140 [LF130] INC.3-6
-	24328-12304		FORK	ﾌｫｰｸ	2	MAST NO.141- [LF130] INC.3-6
-	24328-10553		FORK	ﾌｫｰｸ	2	MAST NO.1-140 [LF137] INC.3-6
-	24328-10554		FORK	ﾌｫｰｸ	2	MAST NO.141- [LF137] INC.3-6
-	24328-12313		FORK	ﾌｫｰｸ	2	MAST NO.1-140 [LF140] INC.3-6
-	24328-12314		FORK	ﾌｫｰｸ	2	MAST NO.141- [LF140] INC.3-6
-	24328-12323		FORK	ﾌｫｰｸ	2	MAST NO.1-140 [LF150] INC.3-6
-	24328-12324		FORK	ﾌｫｰｸ	2	MAST NO.141- [LF150] INC.3-6
-	24328-10563		FORK	ﾌｫｰｸ	2	MAST NO.1-140 [LF152] INC.3-6
-	24328-10564		FORK	ﾌｫｰｸ	2	MAST NO.141- [LF152] INC.3-6
-	24328-12333		FORK	ﾌｫｰｸ	2	MAST NO.1-140 [LF160] INC.3-6
-	24328-12334		FORK	ﾌｫｰｸ	2	MAST NO.141- [LF160] INC.3-6
-	24328-10573		FORK	ﾌｫｰｸ	2	MAST NO.1-140 [LF167] INC.3-6
-	24328-10574		FORK	ﾌｫｰｸ	2	MAST NO.141- [LF167] INC.3-6
-	24328-12343		FORK	ﾌｫｰｸ	2	MAST NO.1-140 [LF170] INC.3-6
-	24328-12344		FORK	ﾌｫｰｸ	2	MAST NO.141- [LF170] INC.3-6
-	24328-12353		FORK	ﾌｫｰｸ	2	MAST NO.1-140 [LF180] INC.3-6
-	24328-12354		FORK	ﾌｫｰｸ	2	MAST NO.141- [LF180] INC.3-6
-	24328-10583		FORK	ﾌｫｰｸ	2	MAST NO.1-140 [LF182] INC.3-6

FIG.177 FORK & LIFT BRACKET [VFM24T](3CYLINDER)

(M4040610) フォーク&リフトブラケット

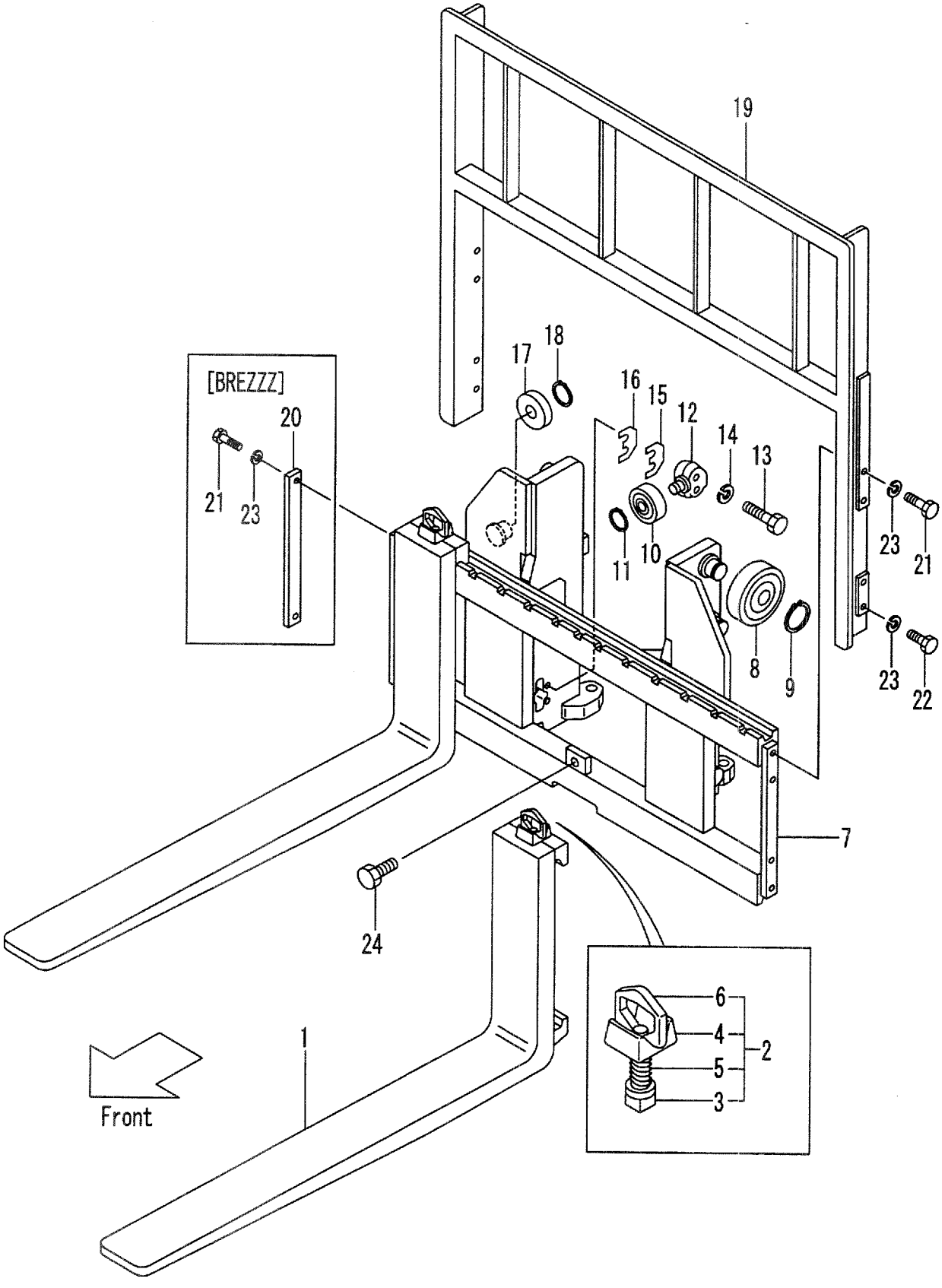

A:VFM24T(FD35,40,FG35,40)

Item No	Part No.	Mark	Description		Req'd	Remarks : Serial No.
-	24328-10584		FORK	ﾌｫｰｸ	2	MAST NO.141- [LF182] INC.3-6
-	24328-12363		FORK	ﾌｫｰｸ	2	MAST NO.1-140 [LF190] INC.3-6
-	24328-12364		FORK	ﾌｫｰｸ	2	MAST NO.141- [LF190] INC.3-6
-	24328-10593		FORK	ﾌｫｰｸ	2	MAST NO.1-140 [LF197] INC.3-6
-	24328-10594		FORK	ﾌｫｰｸ	2	MAST NO.141- [LF197] INC.3-6
-	24328-12373		FORK	ﾌｫｰｸ	2	MAST NO.1-140 [LF200] INC.3-6
-	24328-12374		FORK	ﾌｫｰｸ	2	MAST NO.141- [LF200] INC.3-6
-	24328-12383		FORK	ﾌｫｰｸ	2	MAST NO.1-140 [LF210] INC.3-6
-	24328-12384		FORK	ﾌｫｰｸ	2	MAST NO.141- [LF210] INC.3-6
-	24328-12603		FORK	ﾌｫｰｸ	2	MAST NO.1-140 [LF212] INC.3-6
-	24328-12604		FORK	ﾌｫｰｸ	2	MAST NO.141- [LF212] INC.3-6
-	24328-10613		FORK	ﾌｫｰｸ	2	MAST NO.1-148 [LF220] INC.3-6
-	24328-10614		FORK	ﾌｫｰｸ	2	MAST NO.149- [LF220] INC.3-6
-	24328-10623		FORK	ﾌｫｰｸ	2	MAST NO.1-148 [LF227] INC.3-6
-	24328-10624		FORK	ﾌｫｰｸ	2	MAST NO.149- [LF227] INC.3-6
-	24328-12393		FORK	ﾌｫｰｸ	2	MAST NO.1-148 [LF230] INC.3-6
-	24328-12394		FORK	ﾌｫｰｸ	2	MAST NO.149- [LF230] INC.3-6
2	214J8-11001		STOPPER,FORK	ｽﾄｯﾊﾟ	2	MAST NO.1-216 INC.3-6
-	214J8-11002		STOPPER,FORK	ｽﾄｯﾊﾟ	2	MAST NO.217-
3	NO PART NO.	#	STOPPER	ｽﾄｯﾊﾟ	2	MAST NO.1-216
4	214J8-12001		HEAD	ﾍｯﾄﾞ	2	MAST NO.1-216
5	214J8-12031		SPRING	ｽﾌﾟﾘﾝｸﾞ	2	MAST NO.1-216
6	214A8-12021		HANDLE	ﾊﾝﾄﾞﾙ	2	MAST NO.1-216
7	224T0-60001		BRACKET,LIFT	ﾌﾞﾗｹｯﾄ	1	
-	224T0-61001		BRACKET,LIFT	ﾌﾞﾗｹｯﾄ	1	[LBR002]
-	524T1-62201		BRACKET,LIFT	ﾌﾞﾗｹｯﾄ	1	[WFX168][WFX183][WFX200]
-	524T1-62211		BRACKET,LIFT	ﾌﾞﾗｹｯﾄ	1	[WFX135][WFX138][WFX145] [WFX146][WFX154][WFX180]
-	524T1-62251		BRACKET,LIFT	ﾌﾞﾗｹｯﾄ	1	[LBR002/WFX168]
-	524T7-32101		BRACKET,LIFT	ﾌﾞﾗｹｯﾄ	1	[TRB][TRV][TC]
-	524T7-32111		BRACKET,LIFT	ﾌﾞﾗｹｯﾄ	1	[TC/WFX168]

FIG.177 FORK & LIFT BRACKET [VFM24T](3CYLINDER)

(M4040610) フォーク&リフトブラケット

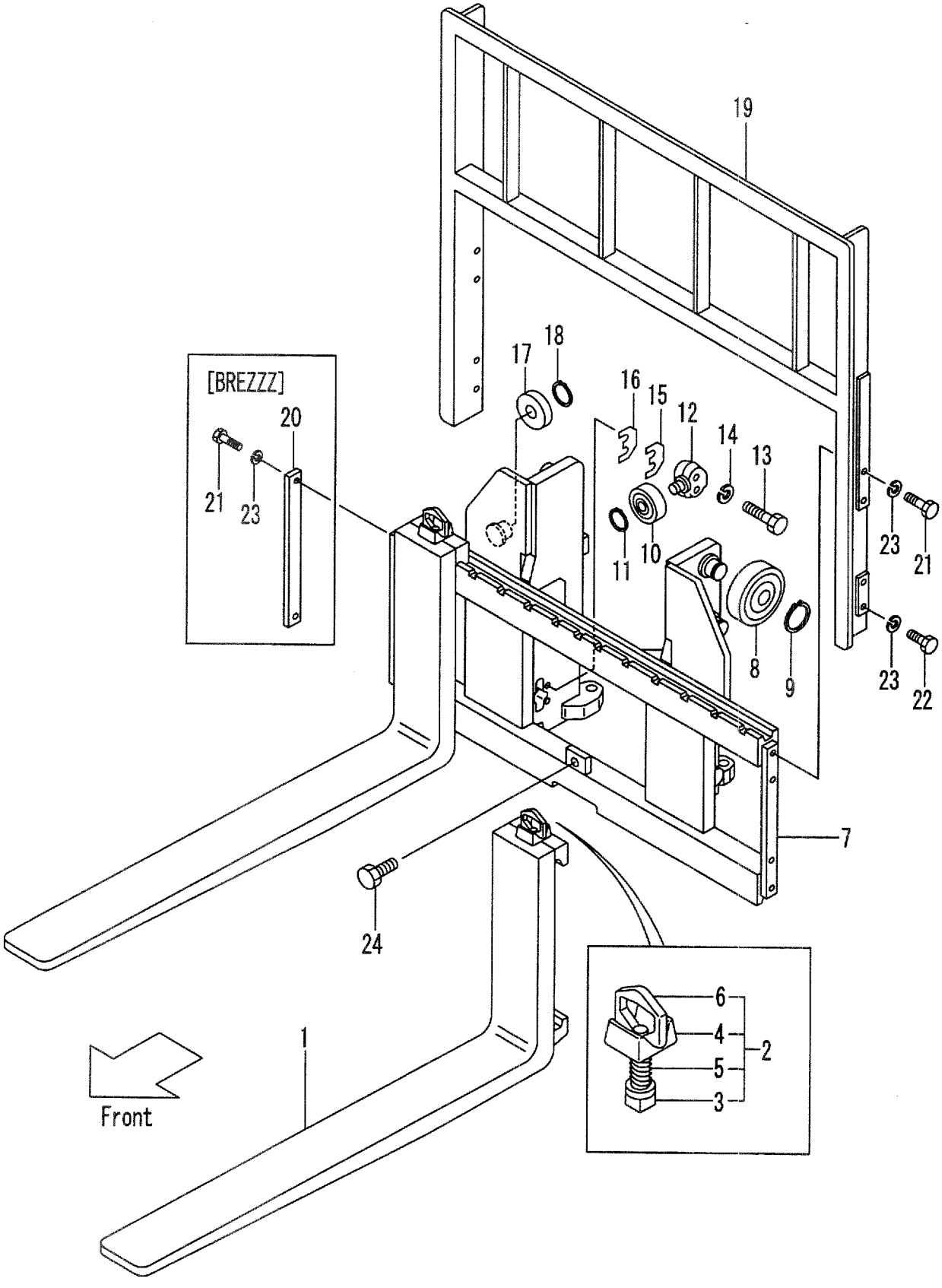

A:VFM24T(FD35,40,FG35,40)

Item No	Part No.	Mark	Description		Req'd	Remarks : Serial No.
-	524T7-32121		BRACKET,LIFT	ﾌﾞﾗｹｯﾄ	1	[TC/WFX180]
8	23818-20701		ROLLER,END,143.5	ﾛｰﾗ	6	
-	23958-22081		ROLLER,END,144.0	ﾛｰﾗ	(6)	
9	02100-00050		RING,SNAP	ｽﾅｯﾌﾟﾘﾝｸﾞ	6	
A1	24319-40152		ROLLER-ASSY,SIDE	ｻｲﾄﾞﾛｰﾗｱｯｾﾝ	2	INC.10-12
10	22198-22341		ROLLER,END,91.5	ﾛｰﾗ	2	
11	02100-00030		RING,SNAP	ｽﾅｯﾌﾟﾘﾝｸﾞ	2	
12	24609-42131		SHAFT	ｼｬﾌﾄ	2	
13	01103-16065		BOLT	ﾎﾞﾙﾄ	4	
14	02011-00016		WASHER	ﾜｯｼｬ	4	
15	24609-42151		SHIM,T-1.0	ｼﾑ	8	
16	24609-42161		SHIM,T-0.2	ｼﾑ	8	
17	22198-22341		ROLLER,END,91.5	ﾛｰﾗ	2	
-	22198-22341		ROLLER,END,91.5	ﾛｰﾗ	2	[WFX168][WFX183][WFX200] [TRB][TRV][TC][TC/WFX168]
-	22198-22341		ROLLER,END,91.5	ﾛｰﾗ	4	[WFX135][WFX138][WFX145] [WFX146][WFX154][WFX180]
-	22198-22341		ROLLER,END,91.5	ﾛｰﾗ	4	[LBR002][LBR002/WFX168] [TC/WFX180]
-	24258-33401		ROLLER,END,92.0	ﾛｰﾗ	(2)	
-	24258-33401		ROLLER,END,92.0	ﾛｰﾗ	(2)	[WFX168][WFX183][WFX200] [TRB][TRV][TC][TC/WFX168]
-	24258-33401		ROLLER,END,92.0	ﾛｰﾗ	(4)	[WFX135][WFX138][WFX145] [WFX146][WFX154][WFX180]
-	24258-33401		ROLLER,END,92.0	ﾛｰﾗ	(4)	[LBR002][LBR002/WFX168] [TC/WFX180]
18	02100-00030		RING,SNAP	ｽﾅｯﾌﾟﾘﾝｸﾞ	2	
-	02100-00030		RING,SNAP	ｽﾅｯﾌﾟﾘﾝｸﾞ	2	[WFX168][WFX183][WFX200] [TRB][TRV][TC][TC/WFX168]
-	02100-00030		RING,SNAP	ｽﾅｯﾌﾟﾘﾝｸﾞ	4	[WFX135][WFX138][WFX145] [WFX146][WFX154][WFX180]
-	02100-00030		RING,SNAP	ｽﾅｯﾌﾟﾘﾝｸﾞ	4	[LBR002][LBR002/WFX168] [TC/WFX180]
19	224T8-22301		BACKREST	ﾊﾞｯｸﾚｽﾄ	1	
-	524T2-74001		BACKREST	ﾊﾞｯｸﾚｽﾄ	1	[EXA][EXC]
-	524T1-64301		BACKREST	ﾊﾞｯｸﾚｽﾄ	1	[WFX168][WBR]
-	524T1-64311		BACKREST	ﾊﾞｯｸﾚｽﾄ	1	[WFX180][WWB]
-	224T8-22601		BACKREST	ﾊﾞｯｸﾚｽﾄ	1	[HBR130]
-	224T8-22611		BACKREST	ﾊﾞｯｸﾚｽﾄ	1	[HBR140]
-	224T8-22621		BACKREST	ﾊﾞｯｸﾚｽﾄ	1	[HBR150]
-	224T8-22631		BACKREST	ﾊﾞｯｸﾚｽﾄ	1	[HBR160]
20	24450-92021		PLATE	ﾌﾟﾚｰﾄ	2	[BREZZZ]
21	01100-14030		BOLT	ﾎﾞﾙﾄ	4	
22	01100-14025		BOLT	ﾎﾞﾙﾄ	4	
23	02010-00014		WASHER	ﾜｯｼｬ	8	
-	02010-00014		WASHER	ﾜｯｼｬ	4	[BREZZZ]
24	01184-12025		BOLT	ﾎﾞﾙﾄ	1	

FIG.178 MAST [VFM24T](3CYLINDER)

(M4040410) マスト

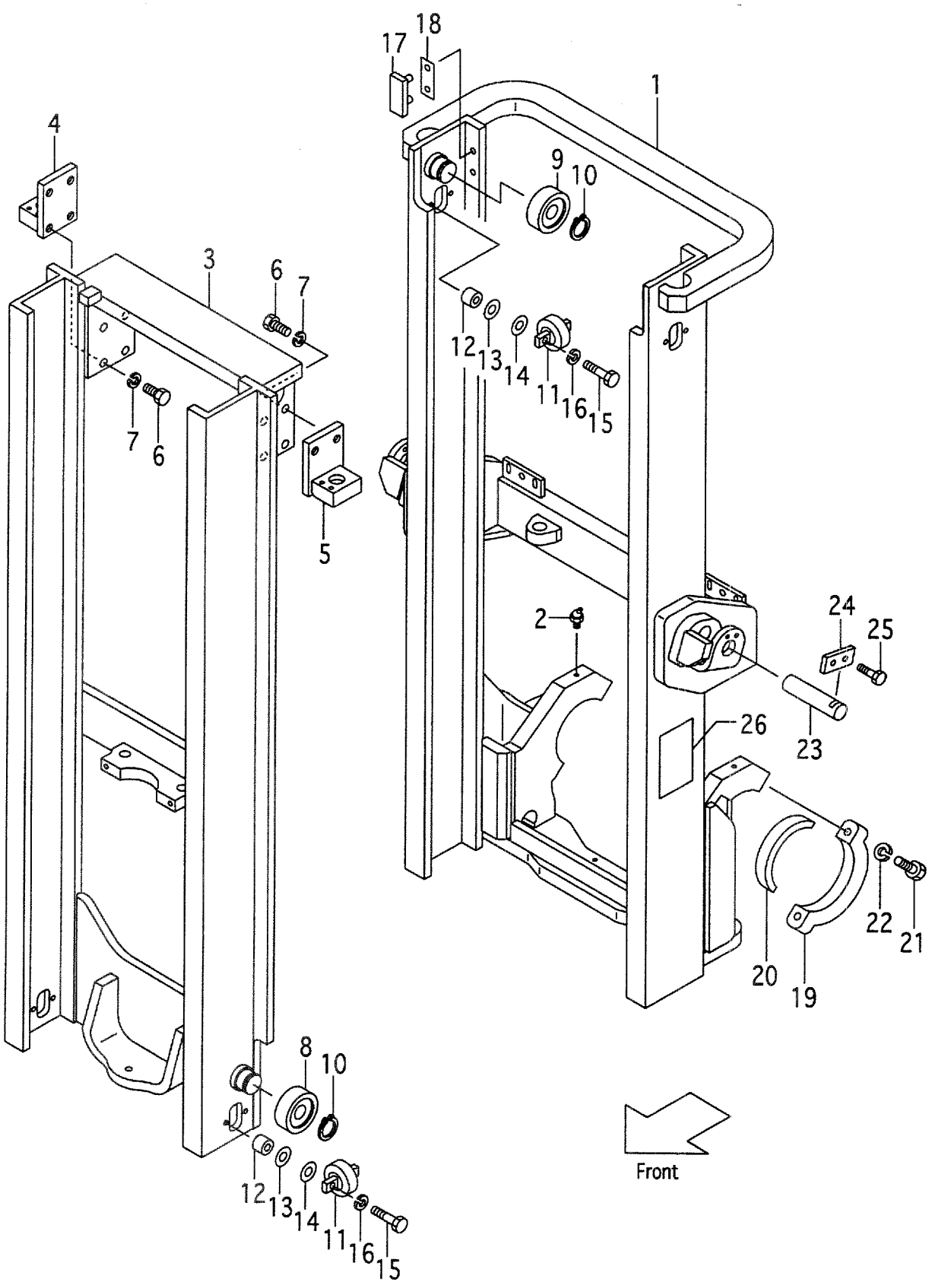

A:VFM24T(FD35,40,FG35,40)

Item No	Part No.	Mark	Description	Req'd	Remarks : Serial No.
1	224T0-40011		MAST,OUTER VFM250 アウタマスト	1	MAST NO.1-245
-	224T0-40012		MAST,OUTER VFM250 アウタマスト	1	MAST NO.246-
-	224T0-40021		MAST,OUTER VFM270 アウタマスト	1	MAST NO.1-245
-	224T0-40022		MAST,OUTER VFM270 アウタマスト	1	MAST NO.246-
-	224T0-40031		MAST,OUTER VFM275 アウタマスト	1	MAST NO.1-245
-	224T0-40032		MAST,OUTER VFM275 アウタマスト	1	MAST NO.246-
-	224T0-40001		MAST,OUTER VFM300 アウタマスト	1	MAST NO.1-245
-	224T0-40002		MAST,OUTER VFM300 アウタマスト	1	MAST NO.246-
-	224T0-40041		MAST,OUTER VFM325 アウタマスト	1	MAST NO.1-245
-	224T0-40042		MAST,OUTER VFM325 アウタマスト	1	MAST NO.246-
-	224T0-40051		MAST,OUTER VFM330 アウタマスト	1	MAST NO.1-245
-	224T0-40052		MAST,OUTER VFM330 アウタマスト	1	MAST NO.246-
-	224T0-40061		MAST,OUTER VFM350 アウタマスト	1	MAST NO.1-245
-	224T0-40062		MAST,OUTER VFM350 アウタマスト	1	MAST NO.246-
-	224T0-40071		MAST,OUTER VFM366 アウタマスト	1	MAST NO.1-245
-	224T0-40072		MAST,OUTER VFM366 アウタマスト	1	MAST NO.246-
-	224T0-40081		MAST,OUTER VFM370 アウタマスト	1	MAST NO.1-245
-	224T0-40082		MAST,OUTER VFM370 アウタマスト	1	MAST NO.246-
-	224T0-40091		MAST,OUTER VFM375 アウタマスト	1	MAST NO.1-245
-	224T0-40092		MAST,OUTER VFM375 アウタマスト	1	MAST NO.246-
-	224T0-40101		MAST,OUTER VFM400 アウタマスト	1	MAST NO.1-245
-	224T0-40102		MAST,OUTER VFM400 アウタマスト	1	MAST NO.246-
-	224T0-40111		MAST,OUTER VFM425 アウタマスト	1	MAST NO.1-245
-	224T0-40112		MAST,OUTER VFM425 アウタマスト	1	MAST NO.246-
-	224T0-40121		MAST,OUTER VFM450 アウタマスト	1	MAST NO.1-245
-	224T0-40122		MAST,OUTER VFM450 アウタマスト	1	MAST NO.246-
-	224T0-40131		MAST,OUTER VFM475 アウタマスト	1	MAST NO.1-245
-	224T0-40132		MAST,OUTER VFM475 アウタマスト	1	MAST NO.246-
-	224T0-40141		MAST,OUTER VFM500 アウタマスト	1	MAST NO.1-245
-	224T0-40142		MAST,OUTER VFM500 アウタマスト	1	MAST NO.246-
-	224T0-40151		MAST,OUTER VFM550 アウタマスト	1	MAST NO.1-245
-	224T0-40152		MAST,OUTER VFM550 アウタマスト	1	MAST NO.246-
-	224T0-40161		MAST,OUTER VFM600 アウタマスト	1	MAST NO.1-245
-	224T0-40162		MAST,OUTER VFM600 アウタマスト	1	MAST NO.246-
-	524W3-87011		MAST,OUTER VFM250 アウタマスト	1	MAST NO.1-245 [RW][HC][EXR]
-	524W3-87012		MAST,OUTER VFM250 アウタマスト	1	MAST NO.246- [RW][HC][EXR]
-	524W3-87021		MAST,OUTER VFM270 アウタマスト	1	MAST NO.1-245 [RW][HC][EXR]
-	524W3-87022		MAST,OUTER VFM270 アウタマスト	1	MAST NO.246- [RW][HC][EXR]
-	524W3-87031		MAST,OUTER VFM275 アウタマスト	1	MAST NO.1-245 [RW][HC][EXR]
-	524W3-87032		MAST,OUTER VFM275 アウタマスト	1	MAST NO.246- [RW][HC][EXR]
-	524W3-87001		MAST,OUTER VFM300 アウタマスト	1	MAST NO.1-245 [RW][HC][EXR]
-	524W3-87002		MAST,OUTER VFM300 アウタマスト	1	MAST NO.246- [RW][HC][EXR]

FIG.178 MAST [VFM24T](3CYLINDER)

(M4040410) マスト

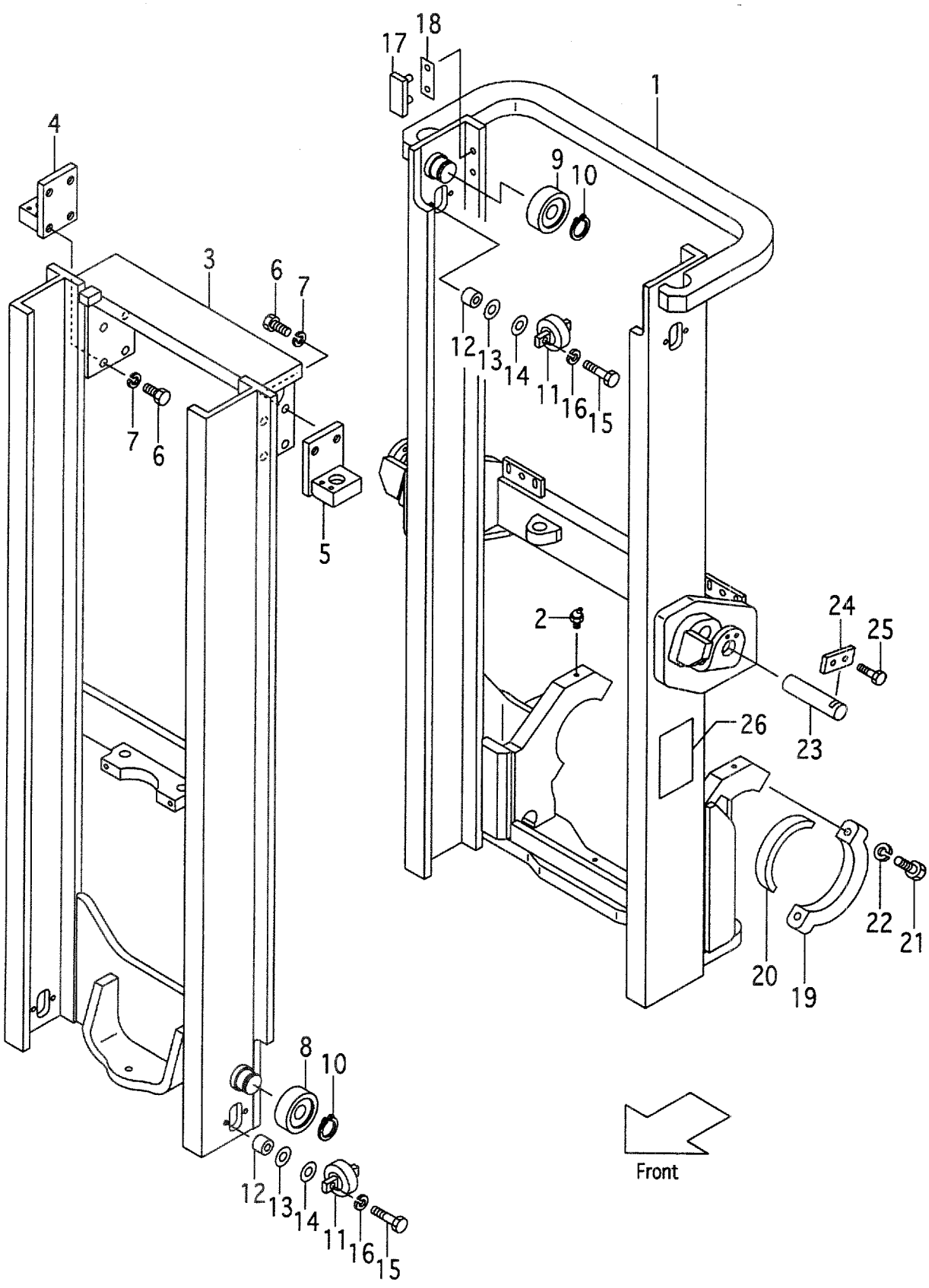

A:VFM24T(FD35,40,FG35,40)

Item No	Part No.	Mark	Description	Req'd	Remarks : Serial No.
-	524W3-87041		MAST,OUTER VFM325 ｱｳﾀﾏｽﾄ	1	MAST NO.1-245 [RW][HC][EXR]
-	524W3-87042		MAST,OUTER VFM325 ｱｳﾀﾏｽﾄ	1	MAST NO.246- [RW][HC][EXR]
-	524W3-87051		MAST,OUTER VFM330 ｱｳﾀﾏｽﾄ	1	MAST NO.1-245 [RW][HC][EXR]
-	524W3-87052		MAST,OUTER VFM330 ｱｳﾀﾏｽﾄ	1	MAST NO.246- [RW][HC][EXR]
-	524W3-87061		MAST,OUTER VFM350 ｱｳﾀﾏｽﾄ	1	MAST NO.1-245 [RW][HC][EXR]
-	524W3-87062		MAST,OUTER VFM350 ｱｳﾀﾏｽﾄ	1	MAST NO.246- [RW][HC][EXR]
-	524W3-87071		MAST,OUTER VFM366 ｱｳﾀﾏｽﾄ	1	MAST NO.1-245 [RW][HC][EXR]
-	524W3-87072		MAST,OUTER VFM366 ｱｳﾀﾏｽﾄ	1	MAST NO.246- [RW][HC][EXR]
-	524W3-87081		MAST,OUTER VFM370 ｱｳﾀﾏｽﾄ	1	MAST NO.1-245 [RW][HC][EXR]
-	524W3-87082		MAST,OUTER VFM370 ｱｳﾀﾏｽﾄ	1	MAST NO.246- [RW][HC][EXR]
-	524W3-87091		MAST,OUTER VFM375 ｱｳﾀﾏｽﾄ	1	MAST NO.1-245 [RW][HC][EXR]
-	524W3-87092		MAST,OUTER VFM375 ｱｳﾀﾏｽﾄ	1	MAST NO.246- [RW][HC][EXR]
-	524W3-87101		MAST,OUTER VFM400 ｱｳﾀﾏｽﾄ	1	MAST NO.1-245 [RW][HC][EXR]
-	524W3-87102		MAST,OUTER VFM400 ｱｳﾀﾏｽﾄ	1	MAST NO.246- [RW][HC][EXR]
-	524W3-87111		MAST,OUTER VFM425 ｱｳﾀﾏｽﾄ	1	MAST NO.1-245 [RW][HC][EXR]
-	524W3-87112		MAST,OUTER VFM425 ｱｳﾀﾏｽﾄ	1	MAST NO.246- [RW][HC][EXR]
-	524W3-87121		MAST,OUTER VFM450 ｱｳﾀﾏｽﾄ	1	MAST NO.1-245 [RW][HC][EXR]
-	524W3-87122		MAST,OUTER VFM450 ｱｳﾀﾏｽﾄ	1	MAST NO.246- [RW][HC][EXR]
-	524W3-87131		MAST,OUTER VFM475 ｱｳﾀﾏｽﾄ	1	MAST NO.1-245 [RW][HC][EXR]
-	524W3-87132		MAST,OUTER VFM475 ｱｳﾀﾏｽﾄ	1	MAST NO.246- [RW][HC][EXR]
-	524W3-87141		MAST,OUTER VFM500 ｱｳﾀﾏｽﾄ	1	MAST NO.1-245 [RW][HC][EXR]
-	524W3-87142		MAST,OUTER VFM500 ｱｳﾀﾏｽﾄ	1	MAST NO.246- [RW][HC][EXR]
-	524W3-87151		MAST,OUTER VFM550 ｱｳﾀﾏｽﾄ	1	MAST NO.1-245 [RW][HC][EXR]
-	524W3-87152		MAST,OUTER VFM550 ｱｳﾀﾏｽﾄ	1	MAST NO.246- [RW][HC][EXR]
-	524W3-87161		MAST,OUTER VFM600 ｱｳﾀﾏｽﾄ	1	MAST NO.1-245 [RW][HC][EXR]

FIG.178 MAST [VFM24T](3CYLINDER)

(M4040410) マスト

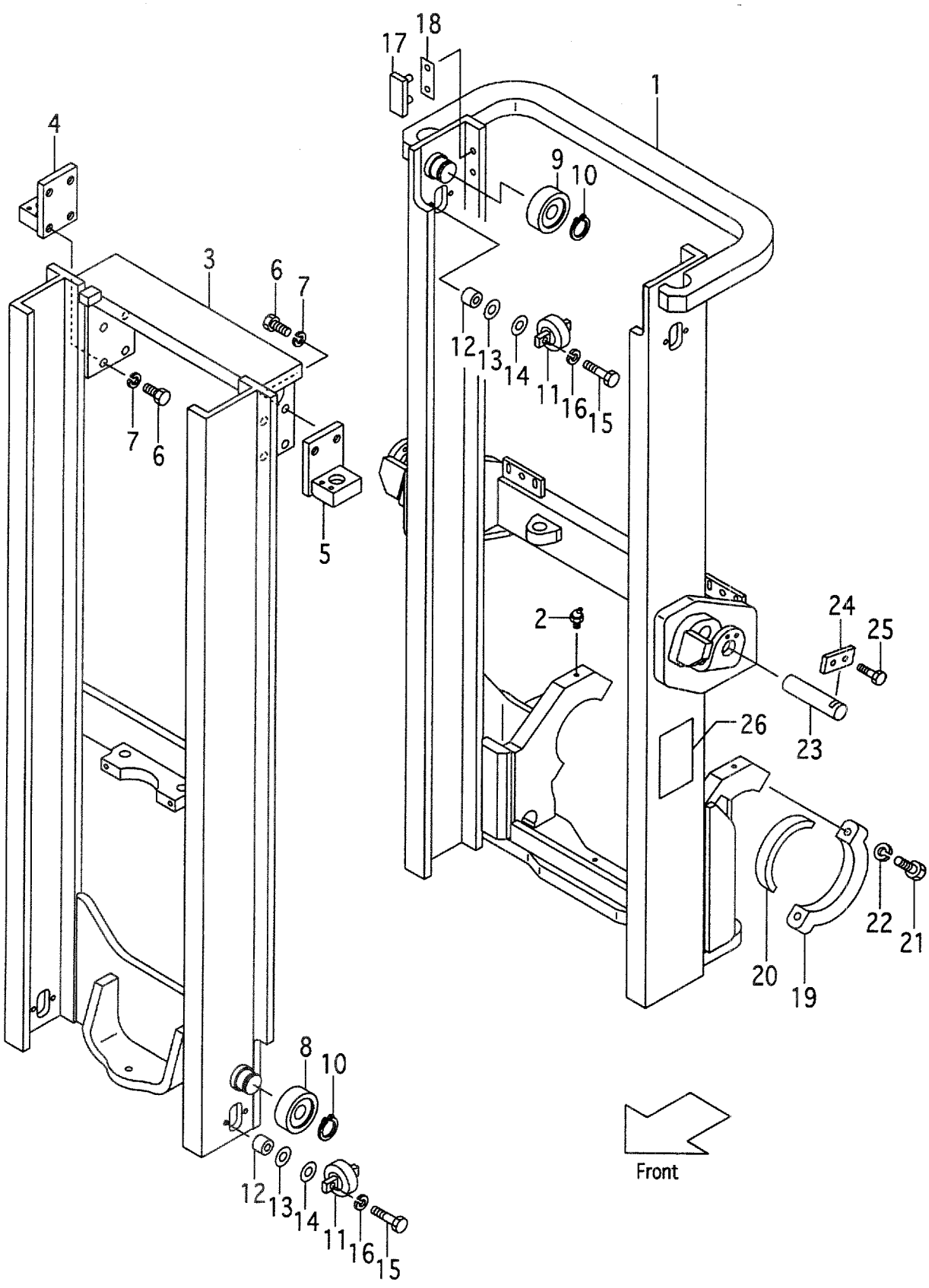

A:VFM24T(FD35,40,FG35,40)

Item No	Part No.	Mark	Description	Req'd	Remarks : Serial No.
-	524W3-87162		MAST,OUTER VFM600 アウタマスト	1	MAST NO.246- [RW][HC][EXR]
2	04901-00160		FITTING フィッティング	2	
3	224T0-40211		MAST,INNER VFM250 インナマスト	1	MAST NO.1-245
-	224T0-40212		MAST,INNER VFM250 インナマスト	1	MAST NO.246-
-	224T0-40221		MAST,INNER VFM270 インナマスト	1	MAST NO.1-245
-	224T0-40222		MAST,INNER VFM270 インナマスト	1	MAST NO.246-
-	224T0-40231		MAST,INNER VFM275 インナマスト	1	MAST NO.1-245
-	224T0-40232		MAST,INNER VFM275 インナマスト	1	MAST NO.246-
-	224T0-40201		MAST,INNER VFM300 インナマスト	1	MAST NO.1-245
-	224T0-40202		MAST,INNER VFM300 インナマスト	1	MAST NO.246-
-	224T0-40241		MAST,INNER VFM325 インナマスト	1	MAST NO.1-245
-	224T0-40242		MAST,INNER VFM325 インナマスト	1	MAST NO.246-
-	224T0-40251		MAST,INNER VFM330 インナマスト	1	MAST NO.1-245
-	224T0-40252		MAST,INNER VFM330 インナマスト	1	MAST NO.246-
-	224T0-40261		MAST,INNER VFM350 インナマスト	1	MAST NO.1-245
-	224T0-40262		MAST,INNER VFM350 インナマスト	1	MAST NO.246-
-	224T0-40271		MAST,INNER VFM366 インナマスト	1	MAST NO.1-245
-	224T0-40272		MAST,INNER VFM366 インナマスト	1	MAST NO.246-
-	224T0-40281		MAST,INNER VFM370 インナマスト	1	MAST NO.1-245
-	224T0-40282		MAST,INNER VFM370 インナマスト	1	MAST NO.246-
-	224T0-40291		MAST,INNER VFM375 インナマスト	1	MAST NO.1-245
-	224T0-40292		MAST,INNER VFM375 インナマスト	1	MAST NO.246-
-	224T0-40301		MAST,INNER VFM400 インナマスト	1	MAST NO.1-245
-	224T0-40302		MAST,INNER VFM400 インナマスト	1	MAST NO.246-
-	224T0-40311		MAST,INNER VFM425 インナマスト	1	MAST NO.1-245
-	224T0-40312		MAST,INNER VFM425 インナマスト	1	MAST NO.246-
-	224T0-40321		MAST,INNER VFM450 インナマスト	1	MAST NO.1-245
-	224T0-40322		MAST,INNER VFM450 インナマスト	1	MAST NO.246-
-	224T0-40331		MAST,INNER VFM475 インナマスト	1	MAST NO.1-245
-	224T0-40332		MAST,INNER VFM475 インナマスト	1	MAST NO.246-
-	224T0-40341		MAST,INNER VFM500 インナマスト	1	MAST NO.1-245
-	224T0-40342		MAST,INNER VFM500 インナマスト	1	MAST NO.246-
-	224T0-40351		MAST,INNER VFM550 インナマスト	1	MAST NO.1-245
-	224T0-40352		MAST,INNER VFM550 インナマスト	1	MAST NO.246-
-	224T0-40361		MAST,INNER VFM600 インナマスト	1	MAST NO.1-245
-	224T0-40362		MAST,INNER VFM600 インナマスト	1	MAST NO.246-
-	524W3-82311		MAST,INNER VFM250 インナマスト	1	[EX]
-	524W3-82321		MAST,INNER VFM270 インナマスト	1	[EX]
-	524W3-82331		MAST,INNER VFM275 インナマスト	1	[EX]
-	524W3-82301		MAST,INNER VFM300 インナマスト	1	[EX]
-	524W3-82341		MAST,INNER VFM325 インナマスト	1	[EX]
-	524W3-82351		MAST,INNER VFM330 インナマスト	1	[EX]
-	524W3-82361		MAST,INNER VFM350 インナマスト	1	[EX]
-	524W3-82371		MAST,INNER VFM366 インナマスト	1	[EX]
-	524W3-82381		MAST,INNER VFM370 インナマスト	1	[EX]
-	524W3-82391		MAST,INNER VFM375 インナマスト	1	[EX]
-	524W3-82401		MAST,INNER VFM400 インナマスト	1	[EX]
-	524W3-82411		MAST,INNER VFM425 インナマスト	1	[EX]
-	524W3-82421		MAST,INNER VFM450 インナマスト	1	[EX]

FIG.178 MAST [VFM24T](3CYLINDER)

(M4040410) マスト

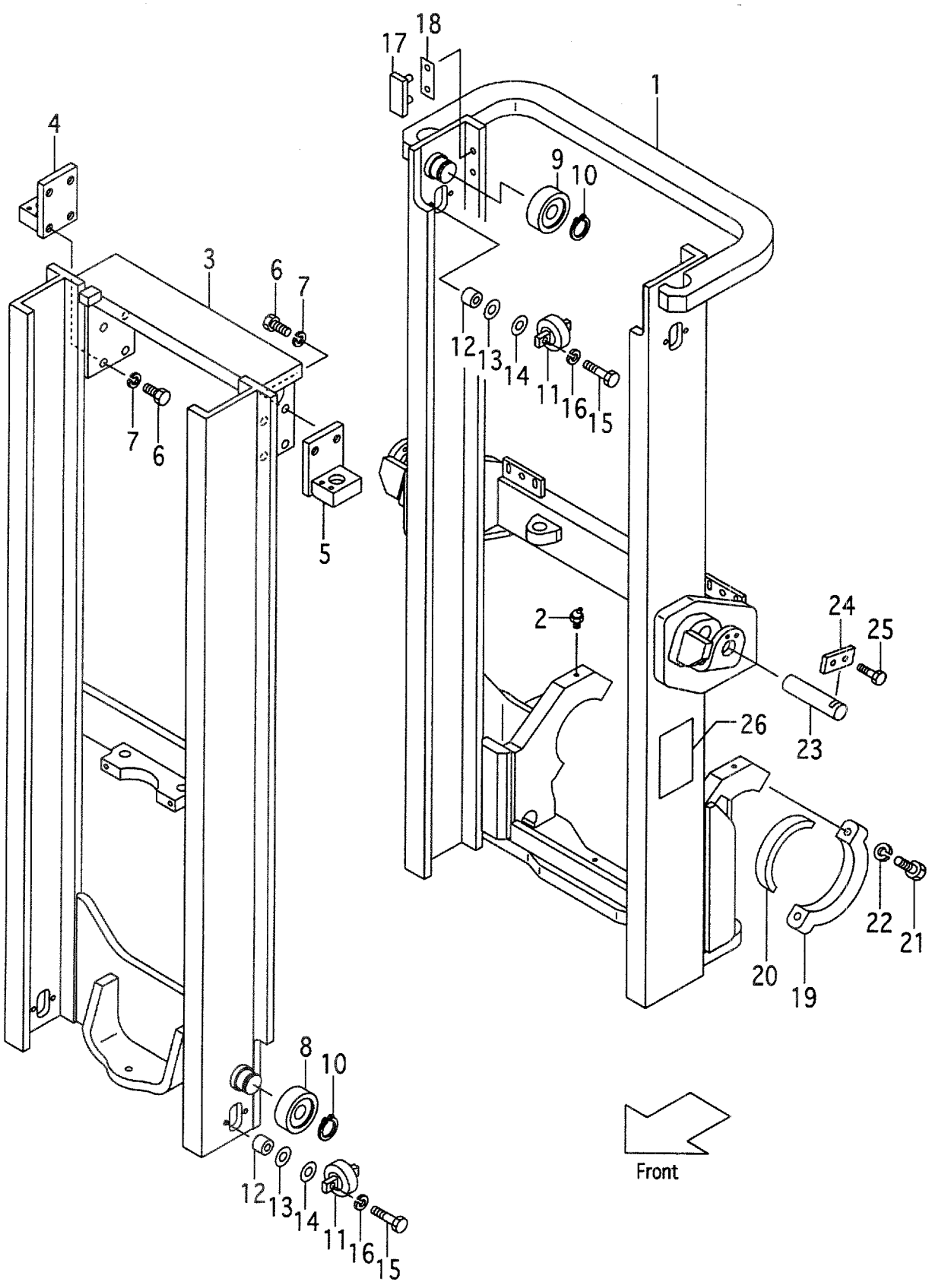

A:VFM24T(FD35,40,FG35,40)

Item No	Part No.	Mark	Description		Req'd	Remarks : Serial No.
-	524W3-82431		MAST,INNER VFM475	ｲﾝﾅﾏｽﾄ	1	[EX]
-	524W3-82441		MAST,INNER VFM500	ｲﾝﾅﾏｽﾄ	1	[EX]
-	524W3-82451		MAST,INNER VFM550	ｲﾝﾅﾏｽﾄ	1	[EX]
-	524W3-82461		MAST,INNER VFM600	ｲﾝﾅﾏｽﾄ	1	[EX]
4	224T0-43001		HEAD,PISTON,RH	ﾍｯﾄﾞ	1	
5	224T0-43051		HEAD,PISTON,LH	ﾍｯﾄﾞ	1	
6	01103-20045		BOLT	ﾎﾞﾙﾄ	8	
7	02011-00020		WASHER	ﾜｯｼｬ	8	
8	23818-20701		ROLLER,END,143.5	ﾛｰﾗ	2	
-	23958-22081		ROLLER,END,144.0	ﾛｰﾗ	(2)	
9	23818-20701		ROLLER,END,143.5	ﾛｰﾗ	2	
10	02100-00050		RING,SNAP	ｽﾅｯﾌﾟﾘﾝｸﾞ	4	
11	23818-30301		ROLLER,SIDE	ﾛｰﾗ	4	
12	23818-30071		SPACER	ｽﾍﾟｰｻ	8	MAST NO.1-245
-	224T8-31111		SPACER	ｽﾍﾟｰｻ	8	MAST NO.246-
13	22548-34051		SHIM,T-0.5	ｼﾑ	16	
14	22548-34061		SHIM,T-1.0	ｼﾑ	8	
15	01100-12045		BOLT	ﾎﾞﾙﾄ	8	
16	02010-00012		WASHER	ﾜｯｼｬ	8	
17	22678-32001		SLIPPER	ｽﾘｯﾊﾟ	2	
18	22679-43231		SHIM	ｼﾑ	4	
19	224T8-02201		CAP	ｷｬｯﾌﾟ	2	
20	224T8-02001		BUSHING	ﾌﾞｯｼﾝｸﾞ	2	
21	01103-20085		BOLT	ﾎﾞﾙﾄ	4	
22	02010-00020		WASHER	ﾜｯｼｬ	4	
23	224T8-52501		PIN	ﾋﾟﾝ	2	
24	23648-50161		PLATE	ﾌﾟﾚｰﾄ	2	
25	01184-10020		BOLT	ﾎﾞﾙﾄ	4	
26	23678-06002		PLATE,NAME	ﾌﾟﾚｰﾄ	1	

FIG.179 LAMP GUARD [(HL,HLG/HL,BKH)/VFM24T](3CYLINDER)

(M4048380) ﾗﾝﾌﾟｶﾞｰﾄﾞ

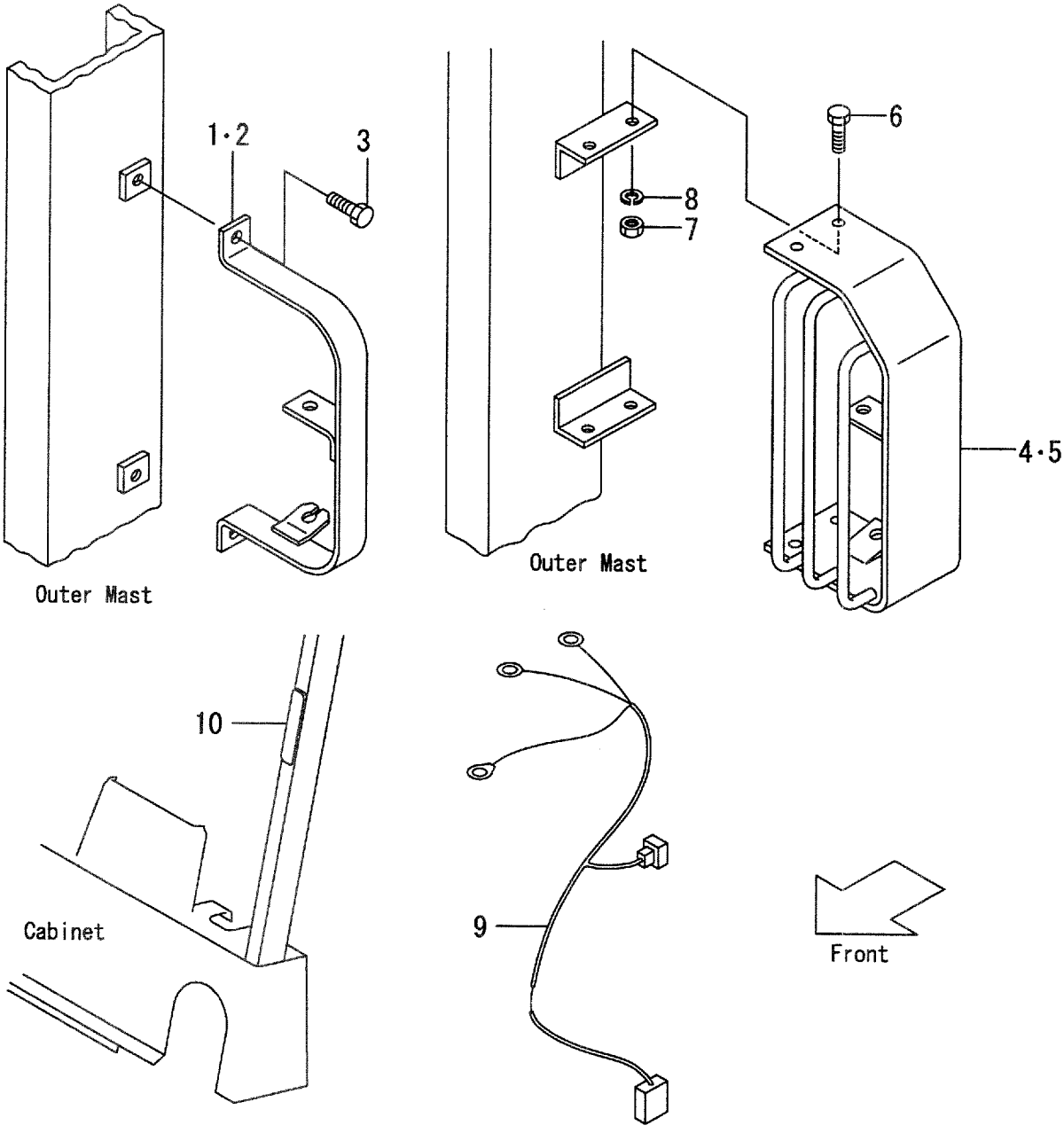

A:VFM24T(FD35,40,FG35,40):1-254

Item No	Part No.	Mark	Description		Req'd	Remarks : Serial No.
1	214A2-43121		BRACKET,LH	ﾌﾞﾗｹｯﾄ	1	[HL]
2	214A2-43131		BRACKET,RH	ﾌﾞﾗｹｯﾄ	1	[HL]
3	01184-12020		BOLT	ﾎﾞﾙﾄ	4	[HL]
4	210F2-42051		GUARD,HEAD-LAMP,LH	ｶﾞｰﾄﾞ	1	[HLG/HL][BKH]
5	210F2-42071		GUARD,HEAD-LAMP,RH	ｶﾞｰﾄﾞ	1	[HLG/HL][BKH]
6	01100-12030		BOLT	ﾎﾞﾙﾄ	8	[HLG/HL][BKH]
7	02010-00012		WASHER	ﾜｯｼｬ	8	[HLG/HL][BKH]
8	01400-00012		NUT	ﾅｯﾄ	8	[HLG/HL][BKH]
9	224W2-43081		WIRE-HARNESS	ﾜｲﾔﾊｰﾈｽ	2	[HL/VM250-275] [HGL/HL/VM250-275] [BKH/VM250-275]
-	224W2-43091		WIRE-HARNESS	ﾜｲﾔﾊｰﾈｽ	2	[HL][HLG/HL][BKH] [HGL/HL/VM300-600] [BKH/VM300-600]
10	524W5-42061		BRACKET	ﾌﾞﾗｹｯﾄ	2	[HL/VM300-600]

FIG.179A LAMP GUARD [(HL,BKH)/VFM24T](3CYLINDER)

(M4048381) ﾗﾝﾌﾟｶﾞｰﾄﾞ

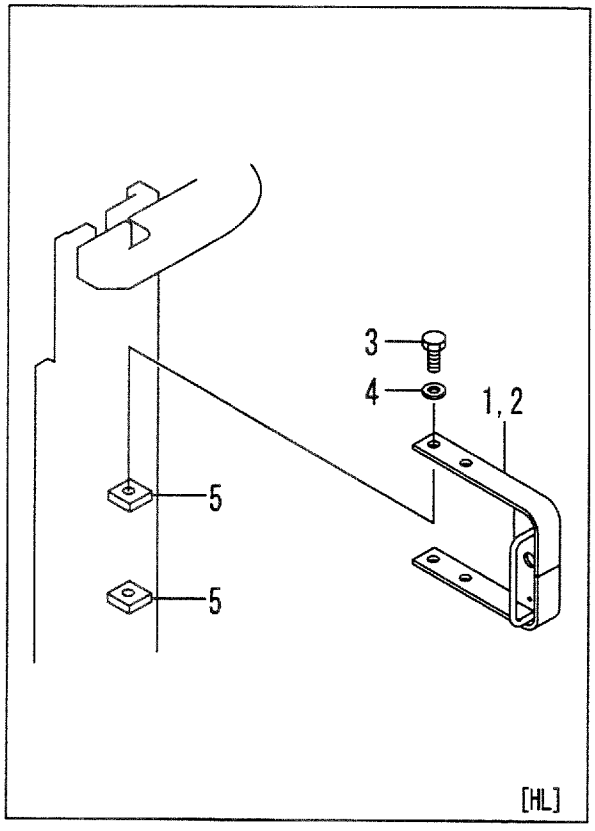

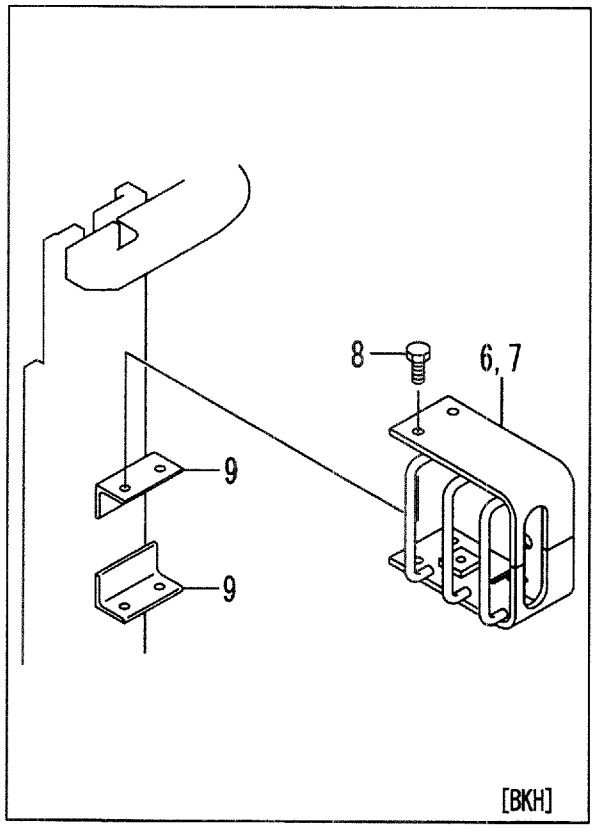

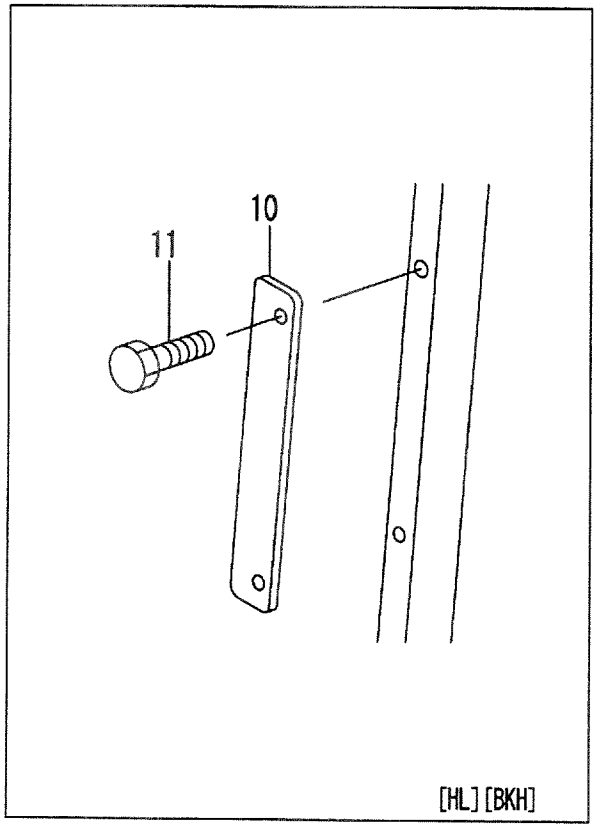

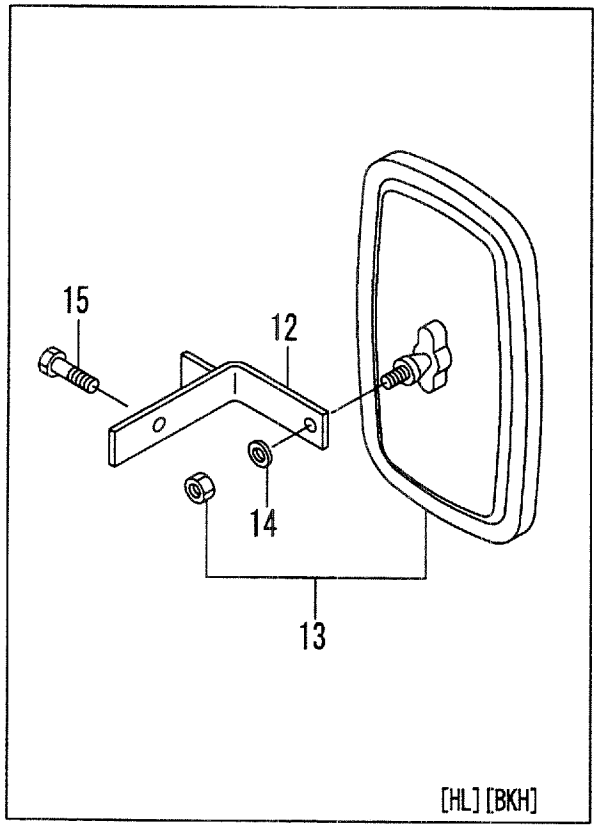

A:VFM24T(FD35,40,FG35,40):255-

Item No	Part No.	Mark	Description		Req'd	Remarks : Serial No.
1	534A9-22011		BRACKET,LH	ﾌﾞﾗｹｯﾄ	1	[HL]
2	534A9-22001		BRACKET,RH	ﾌﾞﾗｹｯﾄ	1	[HL]
3	01100-12020		BOLT	ﾎﾞﾙﾄ	4	[HL]
4	02010-00012		WASHER	ﾜｯｼｬ	4	[HL]
5	534A9-22101		BLOCK,TAPPED	ﾌﾞﾛｯｸ	4	[HL]
6	534A4-22011		GUARD,LH	ｶﾞｰﾄﾞ	1	[BKH]
7	534A4-22001		GUARD,RH	ｶﾞｰﾄﾞ	1	[BKH]
8	01184-12020		BOLT & WASHER	ﾎﾞﾙﾄ&ﾜｯｼｬ	8	[BKH]
9	534A4-22101		BRACKET	ﾌﾞﾗｹｯﾄ	4	[BKH]
10	534A9-22301		PLATE	ﾌﾟﾚｰﾄ	2	[HL][BKH]
11	01100-08012		BOLT	ﾎﾞﾙﾄ	4	[HL][BKH]
12	535C9-22401		BRACKET	ﾌﾞﾗｹｯﾄ	2	[HL][BKH]
13	239A9-92001		MIRROR	ﾐﾗｰ	2	[HL][BKH]
14	222A9-32011		WASHER	ﾜｯｼｬ	2	[HL][BKH]
15	514A5-12021		BOLT	ﾎﾞﾙﾄ	2	[HL][BKH]
16	535C9-22301	+	WIRE-HARNESS	ﾜｲﾔﾊｰﾈｽ	2	[HL][BKH]
17	27732-42221	+	CLAMP	ｸﾗﾝﾌﾟ	4	[HL][BKH]
18	04913-11380	+	BAND	ﾊﾞﾝﾄﾞ	6	[HL][BKH]

FIG.180 LIFT CYLINDER (FRONT)[VFM24T](3CYLINDER)

(M4040510) リフトシリンダ

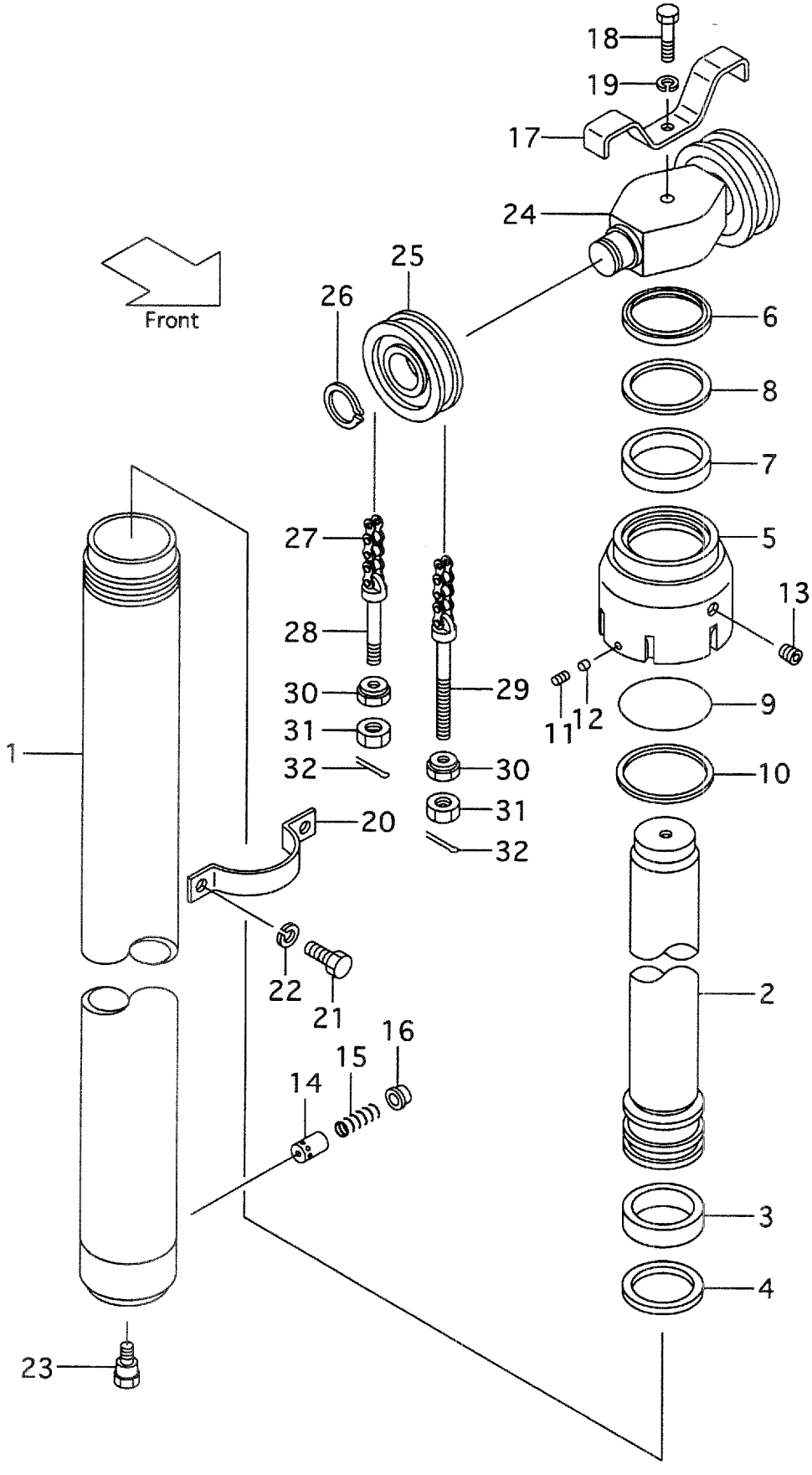

A:VFM24T(FD35,40,FG35,40)

Item No	Part No.	Mark	Description	Req'd	Remarks : Serial No.
A1	224T0-50011		CYL-ASSY,LIFT VFM250 ﾘﾌﾄｼﾘﾝﾀﾞｱｯｾﾝ	1	MAST NO.1-219 INC.1-16
-	224T0-50012		CYL-ASSY,LIFT VFM250 ﾘﾌﾄｼﾘﾝﾀﾞｱｯｾﾝ	1	MAST NO.220- INC.1-16
-	224T0-80021		CYL-ASSY,LIFT VFM270 ﾘﾌﾄｼﾘﾝﾀﾞｱｯｾﾝ	1	MAST NO.1-219 INC.1-16
-	224T0-80022		CYL-ASSY,LIFT VFM270 ﾘﾌﾄｼﾘﾝﾀﾞｱｯｾﾝ	1	MAST NO.220- INC.1-16
-	224T0-50021		CYL-ASSY,LIFT VFM275 ﾘﾌﾄｼﾘﾝﾀﾞｱｯｾﾝ	1	MAST NO.1-219 INC.1-16
-	224T0-50022		CYL-ASSY,LIFT VFM275 ﾘﾌﾄｼﾘﾝﾀﾞｱｯｾﾝ	1	MAST NO.220- INC.1-16
-	224T0-50001		CYL-ASSY,LIFT VFM300 ﾘﾌﾄｼﾘﾝﾀﾞｱｯｾﾝ	1	MAST NO.1-219 INC.1-16
-	224T0-50002		CYL-ASSY,LIFT VFM300 ﾘﾌﾄｼﾘﾝﾀﾞｱｯｾﾝ	1	MAST NO.220- INC.1-16
-	224T0-80031		CYL-ASSY,LIFT VFM325 ﾘﾌﾄｼﾘﾝﾀﾞｱｯｾﾝ	1	MAST NO.1-219 INC.1-16
-	224T0-80032		CYL-ASSY,LIFT VFM325 ﾘﾌﾄｼﾘﾝﾀﾞｱｯｾﾝ	1	MAST NO.220- INC.1-16
-	224T0-50031		CYL-ASSY,LIFT VFM330 ﾘﾌﾄｼﾘﾝﾀﾞｱｯｾﾝ	1	MAST NO.1-219 INC.1-16
-	224T0-50032		CYL-ASSY,LIFT VFM330 ﾘﾌﾄｼﾘﾝﾀﾞｱｯｾﾝ	1	MAST NO.220- INC.1-16
-	224T0-50041		CYL-ASSY,LIFT VFM350 ﾘﾌﾄｼﾘﾝﾀﾞｱｯｾﾝ	1	MAST NO.1-219 INC.1-16
-	224T0-50042		CYL-ASSY,LIFT VFM350 ﾘﾌﾄｼﾘﾝﾀﾞｱｯｾﾝ	1	MAST NO.220- INC.1-16
-	224T0-80051		CYL-ASSY,LIFT VFM366 ﾘﾌﾄｼﾘﾝﾀﾞｱｯｾﾝ	1	MAST NO.1-219 INC.1-16
-	224T0-80052		CYL-ASSY,LIFT VFM366 ﾘﾌﾄｼﾘﾝﾀﾞｱｯｾﾝ	1	MAST NO.220- INC.1-16
-	224T0-50051		CYL-ASSY,LIFT VFM370 ﾘﾌﾄｼﾘﾝﾀﾞｱｯｾﾝ	1	MAST NO.1-219 INC.1-16
-	224T0-50052		CYL-ASSY,LIFT VFM370 ﾘﾌﾄｼﾘﾝﾀﾞｱｯｾﾝ	1	MAST NO.220- INC.1-16
-	224T0-50061		CYL-ASSY,LIFT VFM375 ﾘﾌﾄｼﾘﾝﾀﾞｱｯｾﾝ	1	MAST NO.1-219 INC.1-16
-	224T0-50062		CYL-ASSY,LIFT VFM375 ﾘﾌﾄｼﾘﾝﾀﾞｱｯｾﾝ	1	MAST NO.220- INC.1-16
-	224T0-80071		CYL-ASSY,LIFT VFM400 ﾘﾌﾄｼﾘﾝﾀﾞｱｯｾﾝ	1	MAST NO.1-219 INC.1-16
-	224T0-80072		CYL-ASSY,LIFT VFM400 ﾘﾌﾄｼﾘﾝﾀﾞｱｯｾﾝ	1	MAST NO.220- INC.1-16
-	224T0-50071		CYL-ASSY,LIFT VFM425 ﾘﾌﾄｼﾘﾝﾀﾞｱｯｾﾝ	1	MAST NO.1-219 INC.1-16
-	224T0-50072		CYL-ASSY,LIFT VFM425 ﾘﾌﾄｼﾘﾝﾀﾞｱｯｾﾝ	1	MAST NO.220- INC.1-16
-	224T0-50081		CYL-ASSY,LIFT VFM450 ﾘﾌﾄｼﾘﾝﾀﾞｱｯｾﾝ	1	MAST NO.1-219 INC.1-16

FIG.180 LIFT CYLINDER (FRONT)[VFM24T](3CYLINDER)

(M4040510) リフトシリンダ

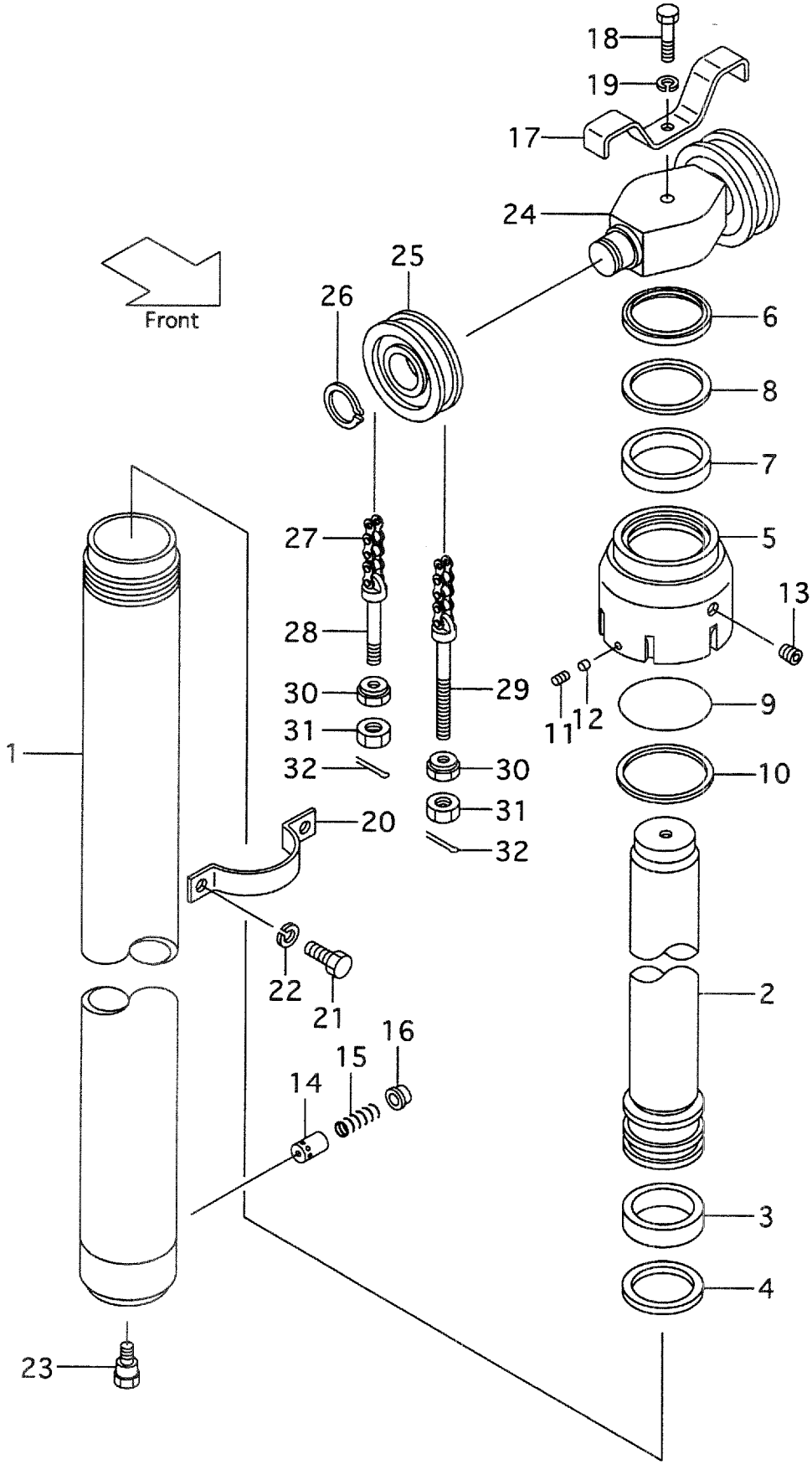

A:VFM24T(FD35,40,FG35,40)

Item No	Part No.	Mark	Description	Req'd	Remarks : Serial No.
-	224T0-50082		CYL-ASSY,LIFT VFM450 ﾘﾌﾄｼﾘﾝﾀﾞｱｯｾﾝ	1	MAST NO.220-INC.1-16
-	224T0-50091		CYL-ASSY,LIFT VFM475 ﾘﾌﾄｼﾘﾝﾀﾞｱｯｾﾝ	1	MAST NO.1-219 INC.1-16
-	224T0-50092		CYL-ASSY,LIFT VFM475 ﾘﾌﾄｼﾘﾝﾀﾞｱｯｾﾝ	1	MAST NO.220-INC.1-16
-	224T0-50101		CYL-ASSY,LIFT VFM500 ﾘﾌﾄｼﾘﾝﾀﾞｱｯｾﾝ	1	MAST NO.1-219 INC.1-16
-	224T0-50102		CYL-ASSY,LIFT VFM500 ﾘﾌﾄｼﾘﾝﾀﾞｱｯｾﾝ	1	MAST NO.220-INC.1-16
-	224T0-50111		CYL-ASSY,LIFT VFM550 ﾘﾌﾄｼﾘﾝﾀﾞｱｯｾﾝ	1	MAST NO.1-219 INC.1-16
-	224T0-50112		CYL-ASSY,LIFT VFM550 ﾘﾌﾄｼﾘﾝﾀﾞｱｯｾﾝ	1	MAST NO.220-INC.1-16
-	224T0-50121		CYL-ASSY,LIFT VFM600 ﾘﾌﾄｼﾘﾝﾀﾞｱｯｾﾝ	1	MAST NO.1-219 INC.1-16
-	224T0-50122		CYL-ASSY,LIFT VFM600 ﾘﾌﾄｼﾘﾝﾀﾞｱｯｾﾝ	1	MAST NO.220-INC.1-16
-	228C0-50011		CYL-ASSY,LIFT VFM250 ﾘﾌﾄｼﾘﾝﾀﾞｱｯｾﾝ	1	MAST NO.1-219 [EX] INC.1-16
-	228C0-50012		CYL-ASSY,LIFT VFM250 ﾘﾌﾄｼﾘﾝﾀﾞｱｯｾﾝ	1	MAST NO.220-[EX] INC.1-16
-	228C0-80021		CYL-ASSY,LIFT VFM270 ﾘﾌﾄｼﾘﾝﾀﾞｱｯｾﾝ	1	MAST NO.1-219 [EX] INC.1-16
-	228C0-80022		CYL-ASSY,LIFT VFM270 ﾘﾌﾄｼﾘﾝﾀﾞｱｯｾﾝ	1	MAST NO.220-[EX] INC.1-16
-	228C0-50021		CYL-ASSY,LIFT VFM275 ﾘﾌﾄｼﾘﾝﾀﾞｱｯｾﾝ	1	MAST NO.1-219 [EX] INC.1-16
-	228C0-50022		CYL-ASSY,LIFT VFM275 ﾘﾌﾄｼﾘﾝﾀﾞｱｯｾﾝ	1	MAST NO.220-[EX] INC.1-16
-	228C0-50001		CYL-ASSY,LIFT VFM300 ﾘﾌﾄｼﾘﾝﾀﾞｱｯｾﾝ	1	MAST NO.1-219 [EX] INC.1-16
-	228C0-50002		CYL-ASSY,LIFT VFM300 ﾘﾌﾄｼﾘﾝﾀﾞｱｯｾﾝ	1	MAST NO.220-[EX] INC.1-16
-	228C0-80031		CYL-ASSY,LIFT VFM325 ﾘﾌﾄｼﾘﾝﾀﾞｱｯｾﾝ	1	MAST NO.1-219 [EX] INC.1-16
-	228C0-80032		CYL-ASSY,LIFT VFM325 ﾘﾌﾄｼﾘﾝﾀﾞｱｯｾﾝ	1	MAST NO.220-[EX] INC.1-16
-	228C0-50031		CYL-ASSY,LIFT VFM330 ﾘﾌﾄｼﾘﾝﾀﾞｱｯｾﾝ	1	MAST NO.1-219 [EX] INC.1-16
-	228C0-50032		CYL-ASSY,LIFT VFM330 ﾘﾌﾄｼﾘﾝﾀﾞｱｯｾﾝ	1	MAST NO.220-[EX] INC.1-16
-	228C0-50041		CYL-ASSY,LIFT VFM350 ﾘﾌﾄｼﾘﾝﾀﾞｱｯｾﾝ	1	MAST NO.1-219 [EX] INC.1-16
-	228C0-50042		CYL-ASSY,LIFT VFM350 ﾘﾌﾄｼﾘﾝﾀﾞｱｯｾﾝ	1	MAST NO.220-[EX] INC.1-16
-	228C0-80051		CYL-ASSY,LIFT VFM366 ﾘﾌﾄｼﾘﾝﾀﾞｱｯｾﾝ	1	MAST NO.1-219 [EX] INC.1-16
-	228C0-80052		CYL-ASSY,LIFT VFM366 ﾘﾌﾄｼﾘﾝﾀﾞｱｯｾﾝ	1	MAST NO.220-[EX] INC.1-16

FIG.180 LIFT CYLINDER (FRONT)[VFM24T](3CYLINDER)

(M4040510) リフトシリンダ

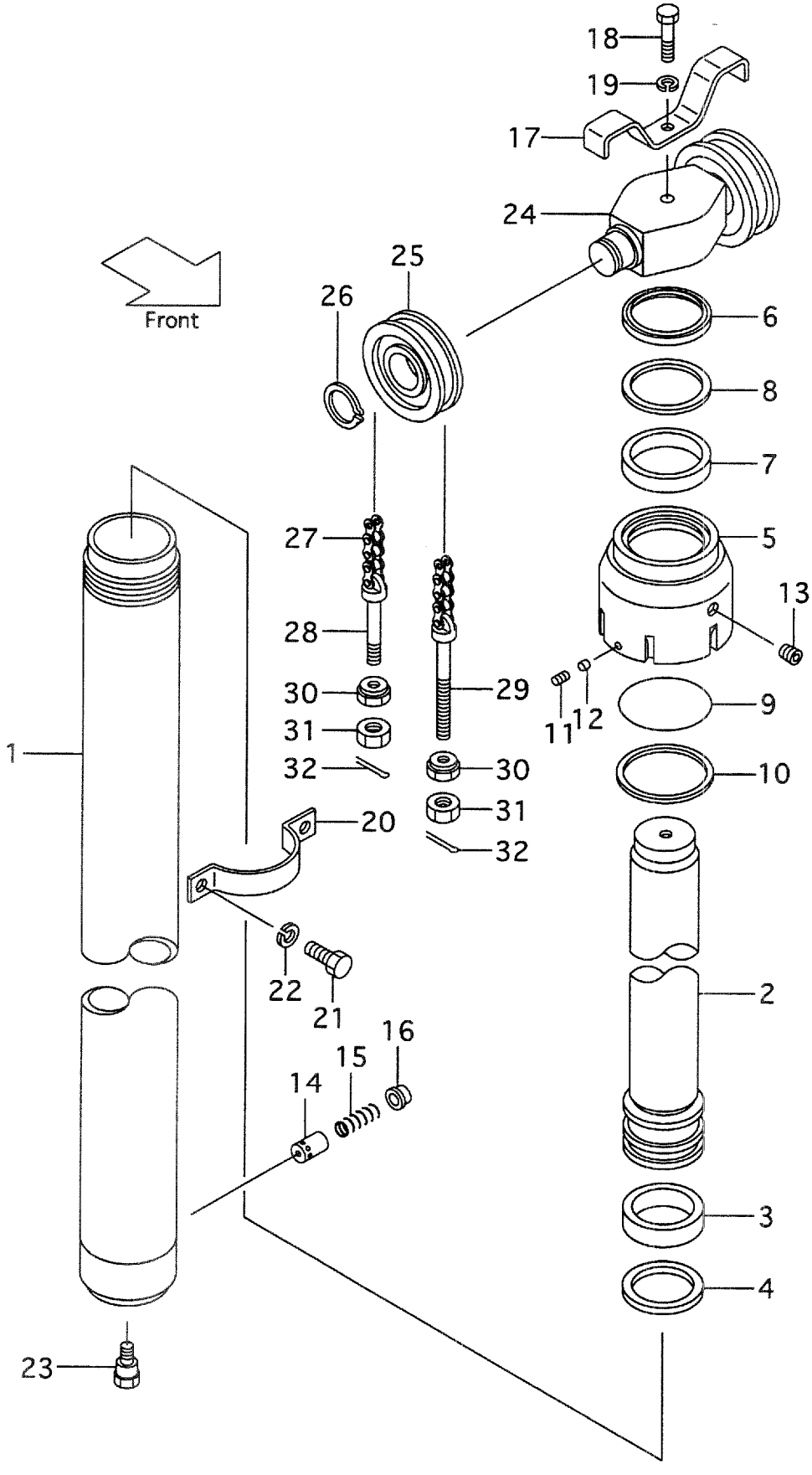

A:VFM24T(FD35,40,FG35,40)

Item No	Part No.	Mark	Description	Req'd	Remarks : Serial No.
-	228C0-50051		CYL-ASSY,LIFT VFM370 ﾘﾌﾄｼﾘﾝﾀﾞｱｯｾﾝ	1	MAST NO.1-219 [EX] INC.1-16
-	228C0-50052		CYL-ASSY,LIFT VFM370 ﾘﾌﾄｼﾘﾝﾀﾞｱｯｾﾝ	1	MAST NO.220- [EX] INC.1-16
-	228C0-50061		CYL-ASSY,LIFT VFM375 ﾘﾌﾄｼﾘﾝﾀﾞｱｯｾﾝ	1	MAST NO.1-219 [EX] INC.1-16
-	228C0-50062		CYL-ASSY,LIFT VFM375 ﾘﾌﾄｼﾘﾝﾀﾞｱｯｾﾝ	1	MAST NO.220- [EX] INC.1-16
-	228C0-80071		CYL-ASSY,LIFT VFM400 ﾘﾌﾄｼﾘﾝﾀﾞｱｯｾﾝ	1	MAST NO.1-219 [EX] INC.1-16
-	228C0-80072		CYL-ASSY,LIFT VFM400 ﾘﾌﾄｼﾘﾝﾀﾞｱｯｾﾝ	1	MAST NO.220- [EX] INC.1-16
-	228C0-50071		CYL-ASSY,LIFT VFM425 ﾘﾌﾄｼﾘﾝﾀﾞｱｯｾﾝ	1	MAST NO.1-219 [EX] INC.1-16
-	228C0-50072		CYL-ASSY,LIFT VFM425 ﾘﾌﾄｼﾘﾝﾀﾞｱｯｾﾝ	1	MAST NO.220- [EX] INC.1-16
-	228C0-50081		CYL-ASSY,LIFT VFM450 ﾘﾌﾄｼﾘﾝﾀﾞｱｯｾﾝ	1	MAST NO.1-219 [EX] INC.1-16
-	228C0-50082		CYL-ASSY,LIFT VFM450 ﾘﾌﾄｼﾘﾝﾀﾞｱｯｾﾝ	1	MAST NO.220- [EX] INC.1-16
-	228C0-50091		CYL-ASSY,LIFT VFM475 ﾘﾌﾄｼﾘﾝﾀﾞｱｯｾﾝ	1	MAST NO.1-219 [EX] INC.1-16
-	228C0-50092		CYL-ASSY,LIFT VFM475 ﾘﾌﾄｼﾘﾝﾀﾞｱｯｾﾝ	1	MAST NO.220- [EX] INC.1-16
-	228C0-50101		CYL-ASSY,LIFT VFM500 ﾘﾌﾄｼﾘﾝﾀﾞｱｯｾﾝ	1	MAST NO.1-219 [EX] INC.1-16
-	228C0-50102		CYL-ASSY,LIFT VFM500 ﾘﾌﾄｼﾘﾝﾀﾞｱｯｾﾝ	1	MAST NO.220- [EX] INC.1-16
-	228C0-50111		CYL-ASSY,LIFT VFM550 ﾘﾌﾄｼﾘﾝﾀﾞｱｯｾﾝ	1	MAST NO.1-219 [EX] INC.1-16
-	228C0-50112		CYL-ASSY,LIFT VFM550 ﾘﾌﾄｼﾘﾝﾀﾞｱｯｾﾝ	1	MAST NO.220- [EX] INC.1-16
-	228C0-50121		CYL-ASSY,LIFT VFM600 ﾘﾌﾄｼﾘﾝﾀﾞｱｯｾﾝ	1	MAST NO.1-219 [EX] INC.1-16
-	228C0-50122		CYL-ASSY,LIFT VFM600 ﾘﾌﾄｼﾘﾝﾀﾞｱｯｾﾝ	1	MAST NO.220- [EX] INC.1-16
1	224T0-50211		TUBE VFM250 ﾁｭｰﾌﾞ	1	
-	224T0-80221		TUBE VFM270 ﾁｭｰﾌﾞ	1	
-	224T0-50221		TUBE VFM275 ﾁｭｰﾌﾞ	1	
-	224T0-50201		TUBE VFM300 ﾁｭｰﾌﾞ	1	
-	224T0-80231		TUBE VFM325 ﾁｭｰﾌﾞ	1	
-	224T0-50231		TUBE VFM330 ﾁｭｰﾌﾞ	1	
-	224T0-50241		TUBE VFM350 ﾁｭｰﾌﾞ	1	
-	224T0-80251		TUBE VFM366 ﾁｭｰﾌﾞ	1	
-	224T0-50251		TUBE VFM370 ﾁｭｰﾌﾞ	1	
-	224T0-50261		TUBE VFM375 ﾁｭｰﾌﾞ	1	
-	224T0-80271		TUBE VFM400 ﾁｭｰﾌﾞ	1	
-	224T0-50271		TUBE VFM425 ﾁｭｰﾌﾞ	1	
-	224T0-50281		TUBE VFM450 ﾁｭｰﾌﾞ	1	
-	224T0-50291		TUBE VFM475 ﾁｭｰﾌﾞ	1	

FIG.180 LIFT CYLINDER (FRONT)[VFM24T](3CYLINDER)

(M4040510) リフトシリンダ

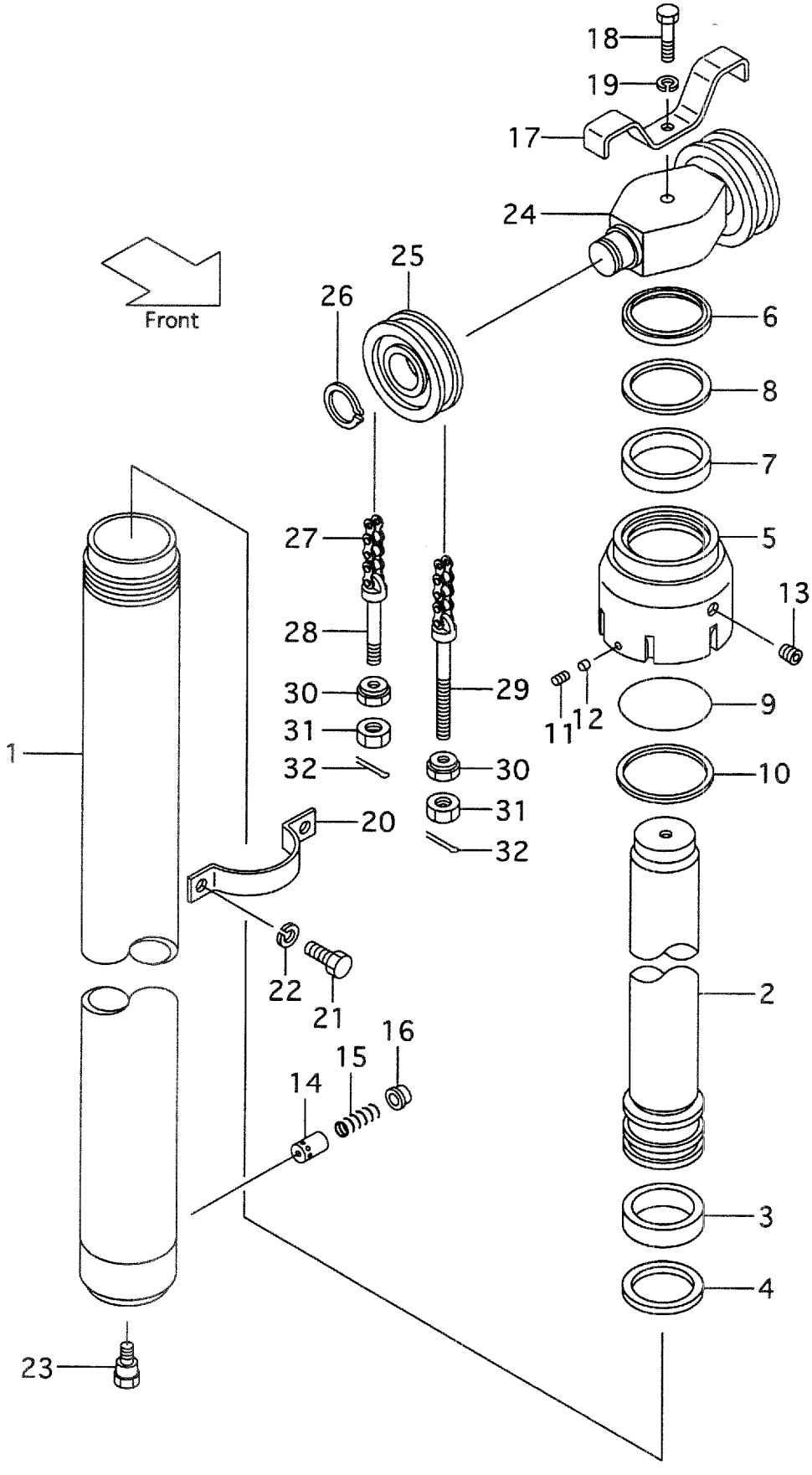

A:VFM24T(FD35,40,FG35,40)

Item No	Part No.	Mark	Description	Req'd	Remarks : Serial No.
-	224T0-50301		TUBE VFM500 ﾁｭｰﾌﾞ	1	
-	224T0-50311		TUBE VFM550 ﾁｭｰﾌﾞ	1	
-	224T0-50321		TUBE VFM600 ﾁｭｰﾌﾞ	1	
-	228C0-50211		TUBE VFM250 ﾁｭｰﾌﾞ	1	[EX]
-	228C0-80221		TUBE VFM270 ﾁｭｰﾌﾞ	1	[EX]
-	228C0-50221		TUBE VFM275 ﾁｭｰﾌﾞ	1	[EX]
-	228C0-50201		TUBE VFM300 ﾁｭｰﾌﾞ	1	[EX]
-	228C0-80231		TUBE VFM325 ﾁｭｰﾌﾞ	1	[EX]
-	228C0-50231		TUBE VFM330 ﾁｭｰﾌﾞ	1	[EX]
-	228C0-50241		TUBE VFM350 ﾁｭｰﾌﾞ	1	[EX]
-	228C0-80251		TUBE VFM366 ﾁｭｰﾌﾞ	1	[EX]
-	228C0-50251		TUBE VFM370 ﾁｭｰﾌﾞ	1	[EX]
-	228C0-50261		TUBE VFM375 ﾁｭｰﾌﾞ	1	[EX]
-	228C0-80271		TUBE VFM400 ﾁｭｰﾌﾞ	1	[EX]
-	228C0-50271		TUBE VFM425 ﾁｭｰﾌﾞ	1	[EX]
-	228C0-50281		TUBE VFM450 ﾁｭｰﾌﾞ	1	[EX]
-	228C0-50291		TUBE VFM475 ﾁｭｰﾌﾞ	1	[EX]
-	228C0-50301		TUBE VFM500 ﾁｭｰﾌﾞ	1	[EX]
-	228C0-50311		TUBE VFM550 ﾁｭｰﾌﾞ	1	[EX]
-	228C0-50321		TUBE VFM600 ﾁｭｰﾌﾞ	1	[EX]
2	224T0-50411		ROD,PISTON VFM250 ﾛｯﾄﾞ	1	
-	224T0-80421		ROD,PISTON VFM270 ﾛｯﾄﾞ	1	
-	224T0-50421		ROD,PISTON VFM275 ﾛｯﾄﾞ	1	
-	224T0-50401		ROD,PISTON VFM300 ﾛｯﾄﾞ	1	
-	224T0-80431		ROD,PISTON VFM325 ﾛｯﾄﾞ	1	
-	224T0-50431		ROD,PISTON VFM330 ﾛｯﾄﾞ	1	
-	224T0-50441		ROD,PISTON VFM350 ﾛｯﾄﾞ	1	
-	224T0-80451		ROD,PISTON VFM366 ﾛｯﾄﾞ	1	
-	224T0-50451		ROD,PISTON VFM370 ﾛｯﾄﾞ	1	
-	224T0-50461		ROD,PISTON VFM375 ﾛｯﾄﾞ	1	
-	224T0-80471		ROD,PISTON VFM400 ﾛｯﾄﾞ	1	
-	224T0-50471		ROD,PISTON VFM425 ﾛｯﾄﾞ	1	
-	224T0-50481		ROD,PISTON VFM450 ﾛｯﾄﾞ	1	
-	224T0-50491		ROD,PISTON VFM475 ﾛｯﾄﾞ	1	
-	224T0-50501		ROD,PISTON VFM500 ﾛｯﾄﾞ	1	
-	224T0-50511		ROD,PISTON VFM550 ﾛｯﾄﾞ	1	
-	224T0-50521		ROD,PISTON VFM600 ﾛｯﾄﾞ	1	
-	228C0-50411		ROD,PISTON VFM250 ﾛｯﾄﾞ	1	[EX]
-	228C0-80421		ROD,PISTON VFM270 ﾛｯﾄﾞ	1	[EX]
-	228C0-50421		ROD,PISTON VFM275 ﾛｯﾄﾞ	1	[EX]
-	228C0-50401		ROD,PISTON VFM300 ﾛｯﾄﾞ	1	[EX]
-	228C0-80431		ROD,PISTON VFM325 ﾛｯﾄﾞ	1	[EX]
-	228C0-50431		ROD,PISTON VFM330 ﾛｯﾄﾞ	1	[EX]
-	228C0-50441		ROD,PISTON VFM350 ﾛｯﾄﾞ	1	[EX]
-	228C0-80451		ROD,PISTON VFM366 ﾛｯﾄﾞ	1	[EX]
-	228C0-50451		ROD,PISTON VFM370 ﾛｯﾄﾞ	1	[EX]
-	228C0-50461		ROD,PISTON VFM375 ﾛｯﾄﾞ	1	[EX]
-	228C0-80471		ROD,PISTON VFM400 ﾛｯﾄﾞ	1	[EX]
-	228C0-50471		ROD,PISTON VFM425 ﾛｯﾄﾞ	1	[EX]
-	228C0-50481		ROD,PISTON VFM450 ﾛｯﾄﾞ	1	[EX]

FIG.180 LIFT CYLINDER (FRONT)[VFM24T](3CYLINDER)

(M4040510) リフトシリンダ

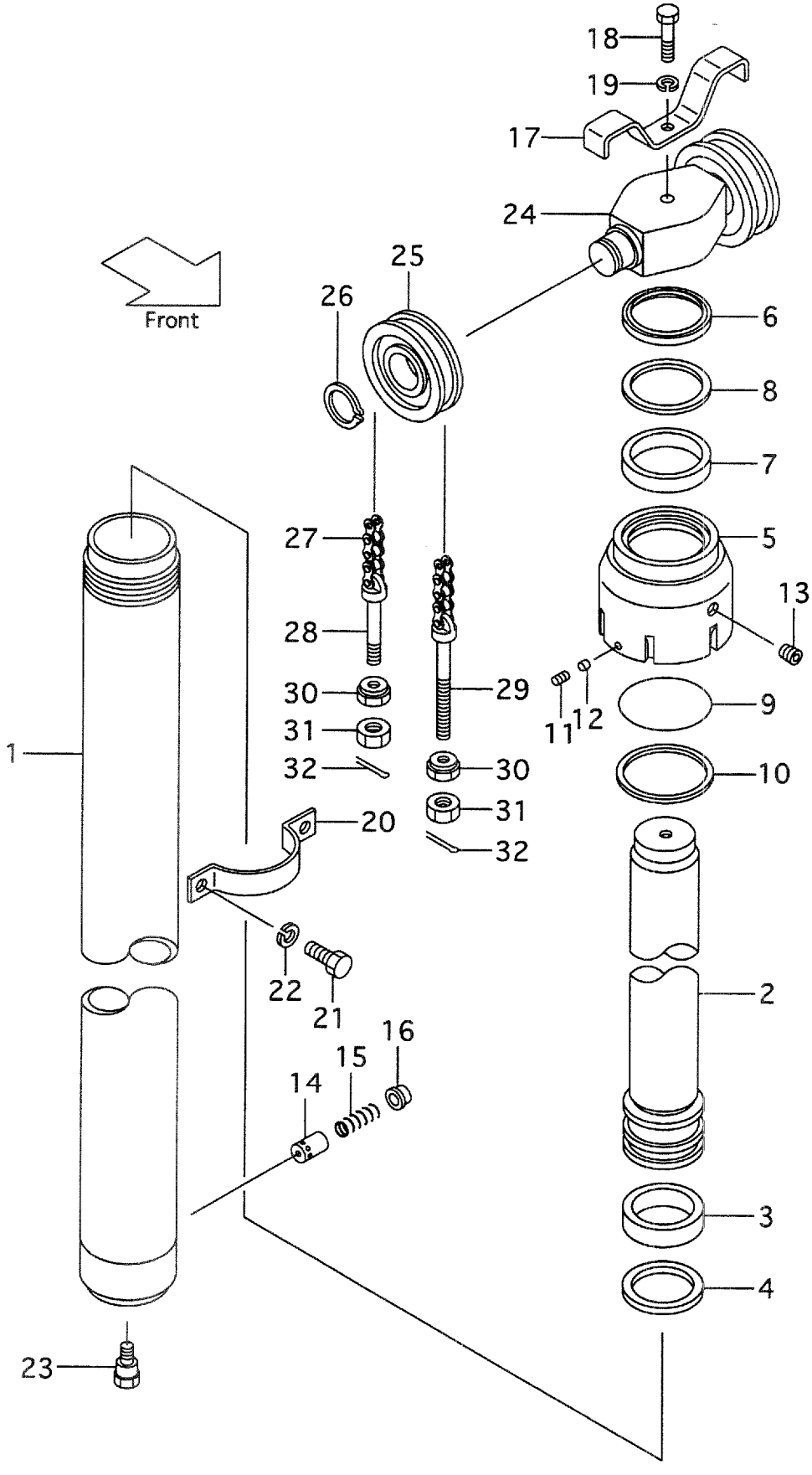

A:VFM24T(FD35,40,FG35,40)

Item No	Part No.	Mark	Description		Req'd	Remarks : Serial No.
-	228C0-50491		ROD,PISTON VFM475	ﾛｯﾄﾞ	1	[EX]
-	228C0-50501		ROD,PISTON VFM500	ﾛｯﾄﾞ	1	[EX]
-	228C0-50511		ROD,PISTON VFM550	ﾛｯﾄﾞ	1	[EX]
-	228C0-50521		ROD,PISTON VFM600	ﾛｯﾄﾞ	1	[EX]
3	22250-52931	*	WEARING	ｳｴｱﾘﾝｸﾞ	1	
-	228C0-82431	*	WEARING	ｳｴｱﾘﾝｸﾞ	1	[EX]
4	24320-58491	*	SEAL	ｼｰﾙ	1	
-	228C0-82441	*	SEAL	ｼｰﾙ	1	[EX]
5	224T0-82501		CAP	ｷｬｯﾌﾟ	1	
-	228C0-82501		CAP	ｷｬｯﾌﾟ	1	[EX]
6	224T0-82531	*	SEAL	ｼｰﾙ	1	
-	228C0-82531	*	SEAL	ｼｰﾙ	1	[EX]
7	224T0-82511	*	PACKING	ﾊﾟｯｷﾝｸﾞ	1	
-	228C0-82511	*	PACKING	ﾊﾟｯｷﾝｸﾞ	1	[EX]
8	224T0-82521	*	RING	ﾘﾝｸﾞ	1	
-	228C0-82521	*	RING	ﾘﾝｸﾞ	1	[EX]
9	03350-01250	*	O-RING	Oﾘﾝｸﾞ	1	
-	03350-01400	*	O-RING	Oﾘﾝｸﾞ	1	[EX]
10	224T0-82541	*	RING	ﾘﾝｸﾞ	1	
-	228C0-82541	*	RING	ﾘﾝｸﾞ	1	[EX]
11	25908-44101		PLUG	ﾌﾟﾗｸﾞ	1	
12	25908-44111		PLUG,NYLON	ﾌﾟﾗｸﾞ	1	
13	22518-40151		PLUG	ﾌﾟﾗｸﾞ	1	
14	24389-46011		PISTON	ﾋﾟｽﾄﾝ	1	
15	24389-46021		SPRING	ｽﾌﾟﾘﾝｸﾞ	1	MAST NO.1-219
-	224T0-53451		SPRING	ｽﾌﾟﾘﾝｸﾞ	1	MAST NO.220-
16	24310-82641		RETAINER	ﾘﾃｰﾅ	1	
17	24310-82291		STOPPER	ｽﾄｯﾊﾟ	1	
18	01103-16070		BOLT	ﾎﾞﾙﾄ	1	
19	02011-00016		WASHER	ﾜｯｼｬ	1	
20	224T0-82421		SUPPORT	ｻﾎﾟｰﾄ	1	
-	228C0-82421		SUPPORT	ｻﾎﾟｰﾄ	1	[EX]
21	01103-12025		BOLT	ﾎﾞﾙﾄ	2	
22	02011-00012		WASHER	ﾜｯｼｬ	2	
23	224T0-82561		BOLT	ﾎﾞﾙﾄ	1	
A2	224T0-53361		HEAD-ASSY,PISTON	ﾋﾟｽﾄﾝﾍｯﾄﾞｱｯｾﾝ	1	INC.24-26
24	224T0-53371		HEAD,PISTON	ﾍｯﾄﾞ	1	
25	24609-41241		SHEAVE	ｼｰﾌﾞ	2	
26	02100-00050		RING,SNAP	ｽﾅｯﾌﾟﾘﾝｸﾞ	2	
27	23918-45511		CHAIN,LEAF VFM250	ﾁｪｰﾝ	2	
-	23918-45551		CHAIN,LEAF VFM270	ﾁｪｰﾝ	2	
-	23918-45531		CHAIN,LEAF VFM275	ﾁｪｰﾝ	2	
-	23918-45551		CHAIN,LEAF VFM300	ﾁｪｰﾝ	2	
-	23918-45591		CHAIN,LEAF VFM325	ﾁｪｰﾝ	2	
-	23918-45611		CHAIN,LEAF VFM330	ﾁｪｰﾝ	2	
-	23918-45651		CHAIN,LEAF VFM350	ﾁｪｰﾝ	2	
-	23918-45691		CHAIN,LEAF VFM366	ﾁｪｰﾝ	2	
-	23918-45691		CHAIN,LEAF VFM370	ﾁｪｰﾝ	2	
-	23918-45711		CHAIN,LEAF VFM375	ﾁｪｰﾝ	2	
-	23918-45771		CHAIN,LEAF VFM400	ﾁｪｰﾝ	2	

FIG.180 LIFT CYLINDER (FRONT)[VFM24T](3CYLINDER)

(M4040510) リフトシリンダ

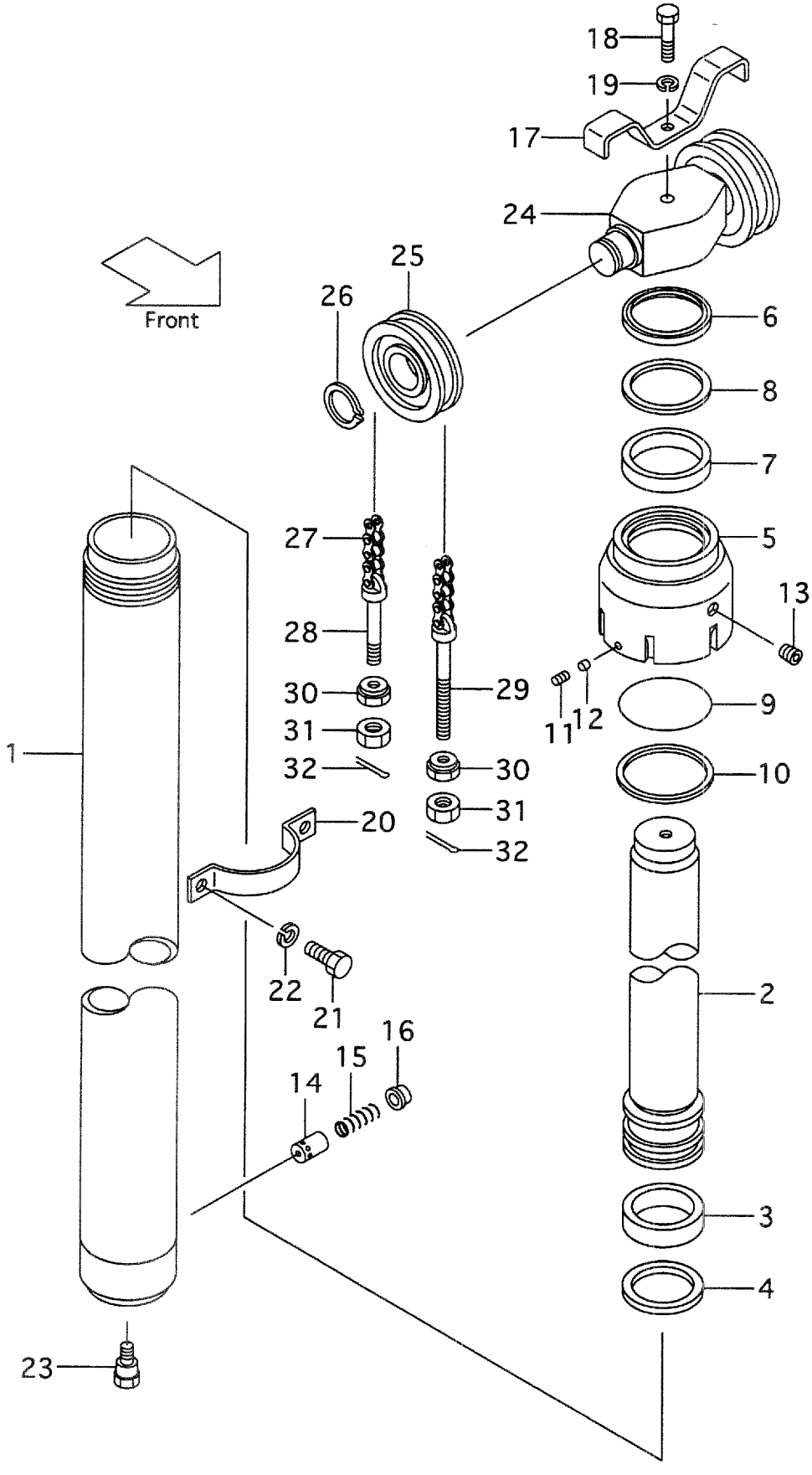

A:VFM24T(FD35,40,FG35,40)

Item No	Part No.	Mark	Description		Req'd	Remarks : Serial No.
-	23918-45831		CHAIN,LEAF VFM425	ﾁｪｰﾝ	2	
-	23918-45871		CHAIN,LEAF VFM450	ﾁｪｰﾝ	2	
-	23918-45911		CHAIN,LEAF VFM475	ﾁｪｰﾝ	2	
-	23918-45971		CHAIN,LEAF VFM500	ﾁｪｰﾝ	2	
-	23918-46091		CHAIN,LEAF VFM550	ﾁｪｰﾝ	2	
-	23918-46191		CHAIN,LEAF VFM600	ﾁｪｰﾝ	2	
-	23918-45491		CHAIN,LEAF VFM250	ﾁｪｰﾝ	2	[EX]
-	23918-45531		CHAIN,LEAF VFM270	ﾁｪｰﾝ	2	[EX]
-	23918-45511		CHAIN,LEAF VFM275	ﾁｪｰﾝ	2	[EX]
-	23918-45551		CHAIN,LEAF VFM300	ﾁｪｰﾝ	2	[EX]
-	23918-45591		CHAIN,LEAF VFM325	ﾁｪｰﾝ	2	[EX]
-	23918-45611		CHAIN,LEAF VFM330	ﾁｪｰﾝ	2	[EX]
-	23918-45651		CHAIN,LEAF VFM350	ﾁｪｰﾝ	2	[EX]
-	23918-45671		CHAIN,LEAF VFM366	ﾁｪｰﾝ	2	[EX]
-	23918-45691		CHAIN,LEAF VFM370	ﾁｪｰﾝ	2	[EX]
-	23918-45691		CHAIN,LEAF VFM375	ﾁｪｰﾝ	2	[EX]
-	23918-45771		CHAIN,LEAF VFM400	ﾁｪｰﾝ	2	[EX]
-	23918-45811		CHAIN,LEAF VFM425	ﾁｪｰﾝ	2	[EX]
-	23918-45851		CHAIN,LEAF VFM450	ﾁｪｰﾝ	2	[EX]
-	23918-45911		CHAIN,LEAF VFM475	ﾁｪｰﾝ	2	[EX]
-	23918-45951		CHAIN,LEAF VFM500	ﾁｪｰﾝ	2	[EX]
-	23918-46071		CHAIN,LEAF VFM550	ﾁｪｰﾝ	2	[EX]
-	23918-46171		CHAIN,LEAF VFM600	ﾁｪｰﾝ	2	[EX]
28	24329-45441		PIN	ﾋﾟﾝ	2	
29	23918-42681		PIN	ﾋﾟﾝ	2	
30	23818-30271		NUT	ﾅｯﾄ	4	
31	01402-00022		NUT	ﾅｯﾄ	4	
32	02200-03040		PIN,COTTER	ﾋﾟﾝ	4	
K1	224T0-59801		KIT,OVERHAUL	ｵｰﾊﾞｰﾎｰﾙｷｯﾄ	1	INC.3,4,6-10
K2	228C0-59801		KIT,OVERHAUL	ｵｰﾊﾞｰﾎｰﾙｷｯﾄ	1	[EX] INC.3,4,6-10

FIG.181 LIFT CYLINDER (REAR)[VFM24T](3CYLINDER)

(M4040530) リフトシリンダ

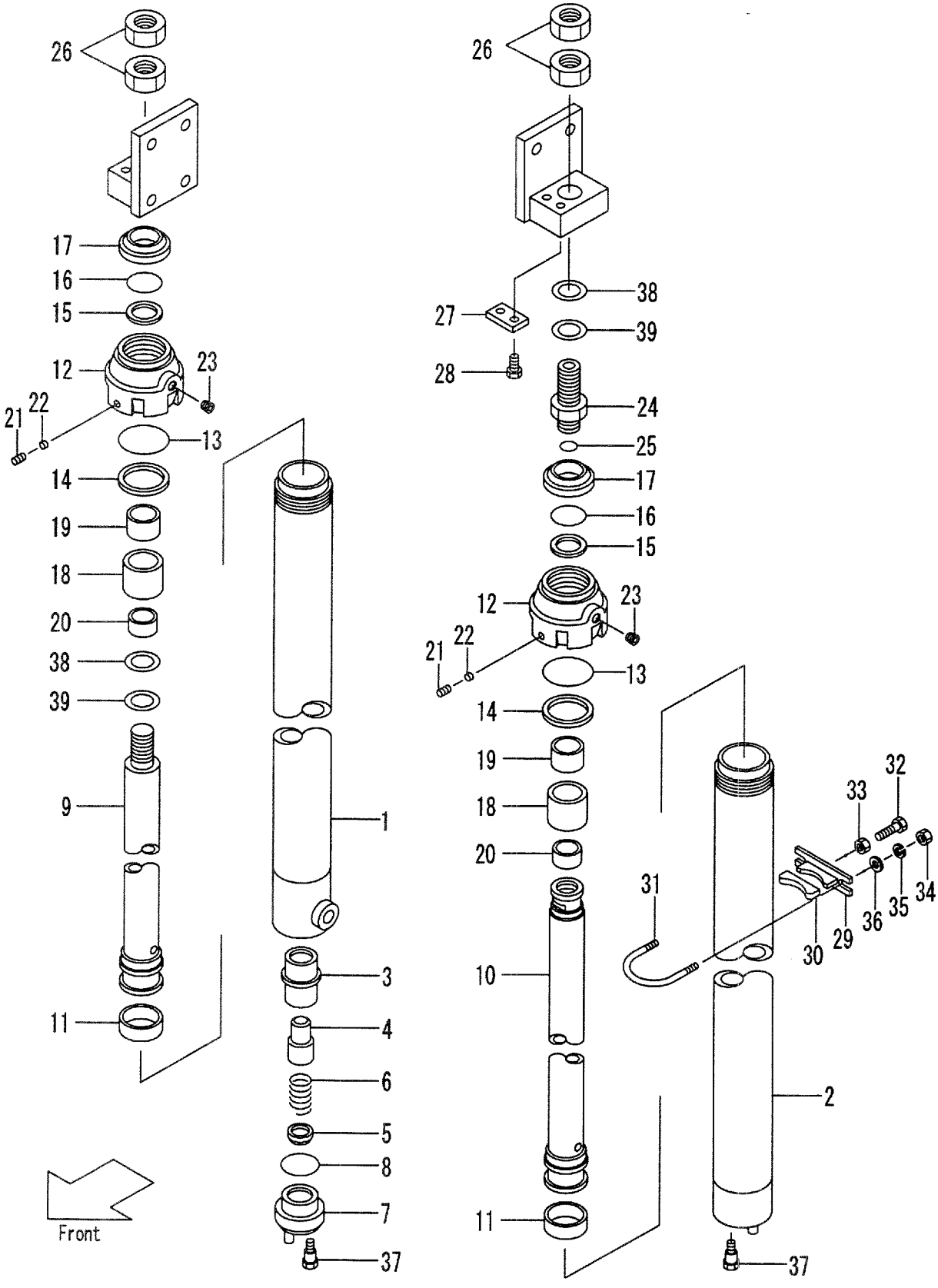

A:VFM24T(FD35,40,FG35,40)

Item No	Part No.	Mark	Description	Req'd	Remarks : Serial No.
A1	224T0-50611		CYL-ASSY,LIFT,RH VFM250 ﾘﾌﾄｼﾘﾝﾀﾞｱｯｾﾝ	1	INC.1-23
-	224T0-50621		CYL-ASSY,LIFT,RH VFM270 ﾘﾌﾄｼﾘﾝﾀﾞｱｯｾﾝ	1	INC.1-23
-	224T0-50631		CYL-ASSY,LIFT,RH VFM275 ﾘﾌﾄｼﾘﾝﾀﾞｱｯｾﾝ	1	INC.1-23
-	224T0-50601		CYL-ASSY,LIFT,RH VFM300 ﾘﾌﾄｼﾘﾝﾀﾞｱｯｾﾝ	1	INC.1-23
-	224T0-50641		CYL-ASSY,LIFT,RH VFM325 ﾘﾌﾄｼﾘﾝﾀﾞｱｯｾﾝ	1	INC.1-23
-	224T0-50651		CYL-ASSY,LIFT,RH VFM330 ﾘﾌﾄｼﾘﾝﾀﾞｱｯｾﾝ	1	INC.1-23
-	224T0-50661		CYL-ASSY,LIFT,RH VFM350 ﾘﾌﾄｼﾘﾝﾀﾞｱｯｾﾝ	1	INC.1-23
-	224T0-50671		CYL-ASSY,LIFT,RH VFM366 ﾘﾌﾄｼﾘﾝﾀﾞｱｯｾﾝ	1	INC.1-23
-	224T0-50681		CYL-ASSY,LIFT,RH VFM370 ﾘﾌﾄｼﾘﾝﾀﾞｱｯｾﾝ	1	INC.1-23
-	224T0-50691		CYL-ASSY,LIFT,RH VFM375 ﾘﾌﾄｼﾘﾝﾀﾞｱｯｾﾝ	1	INC.1-23
-	224T0-50701		CYL-ASSY,LIFT,RH VFM400 ﾘﾌﾄｼﾘﾝﾀﾞｱｯｾﾝ	1	INC.1-23
-	224T0-50711		CYL-ASSY,LIFT,RH VFM425 ﾘﾌﾄｼﾘﾝﾀﾞｱｯｾﾝ	1	INC.1-23
-	224T0-50721		CYL-ASSY,LIFT,RH VFM450 ﾘﾌﾄｼﾘﾝﾀﾞｱｯｾﾝ	1	INC.1-23
-	224T0-50731		CYL-ASSY,LIFT,RH VFM475 ﾘﾌﾄｼﾘﾝﾀﾞｱｯｾﾝ	1	INC.1-23
-	224T0-50741		CYL-ASSY,LIFT,RH VFM500 ﾘﾌﾄｼﾘﾝﾀﾞｱｯｾﾝ	1	INC.1-23
-	224T0-50751		CYL-ASSY,LIFT,RH VFM550 ﾘﾌﾄｼﾘﾝﾀﾞｱｯｾﾝ	1	INC.1-23
-	224T0-50761		CYL-ASSY,LIFT,RH VFM600 ﾘﾌﾄｼﾘﾝﾀﾞｱｯｾﾝ	1	INC.1-23
-	524W3-86011		CYL-ASSY,LIFT,RH VFM250 ﾘﾌﾄｼﾘﾝﾀﾞｱｯｾﾝ	1	[EX] INC.1-23
-	524W3-86021		CYL-ASSY,LIFT,RH VFM270 ﾘﾌﾄｼﾘﾝﾀﾞｱｯｾﾝ	1	[EX] INC.1-23
-	524W3-86031		CYL-ASSY,LIFT,RH VFM275 ﾘﾌﾄｼﾘﾝﾀﾞｱｯｾﾝ	1	[EX] INC.1-23
-	524W3-86001		CYL-ASSY,LIFT,RH VFM300 ﾘﾌﾄｼﾘﾝﾀﾞｱｯｾﾝ	1	[EX] INC.1-23
-	524W3-86041		CYL-ASSY,LIFT,RH VFM325 ﾘﾌﾄｼﾘﾝﾀﾞｱｯｾﾝ	1	[EX] INC.1-23
-	524W3-86051		CYL-ASSY,LIFT,RH VFM330 ﾘﾌﾄｼﾘﾝﾀﾞｱｯｾﾝ	1	[EX] INC.1-23
-	524W3-86061		CYL-ASSY,LIFT,RH VFM350 ﾘﾌﾄｼﾘﾝﾀﾞｱｯｾﾝ	1	[EX] INC.1-23
-	524W3-86071		CYL-ASSY,LIFT,RH VFM366 ﾘﾌﾄｼﾘﾝﾀﾞｱｯｾﾝ	1	[EX] INC.1-23

FIG.181 LIFT CYLINDER (REAR)[VFM24T](3CYLINDER)

(M4040530) リフトシリンダ

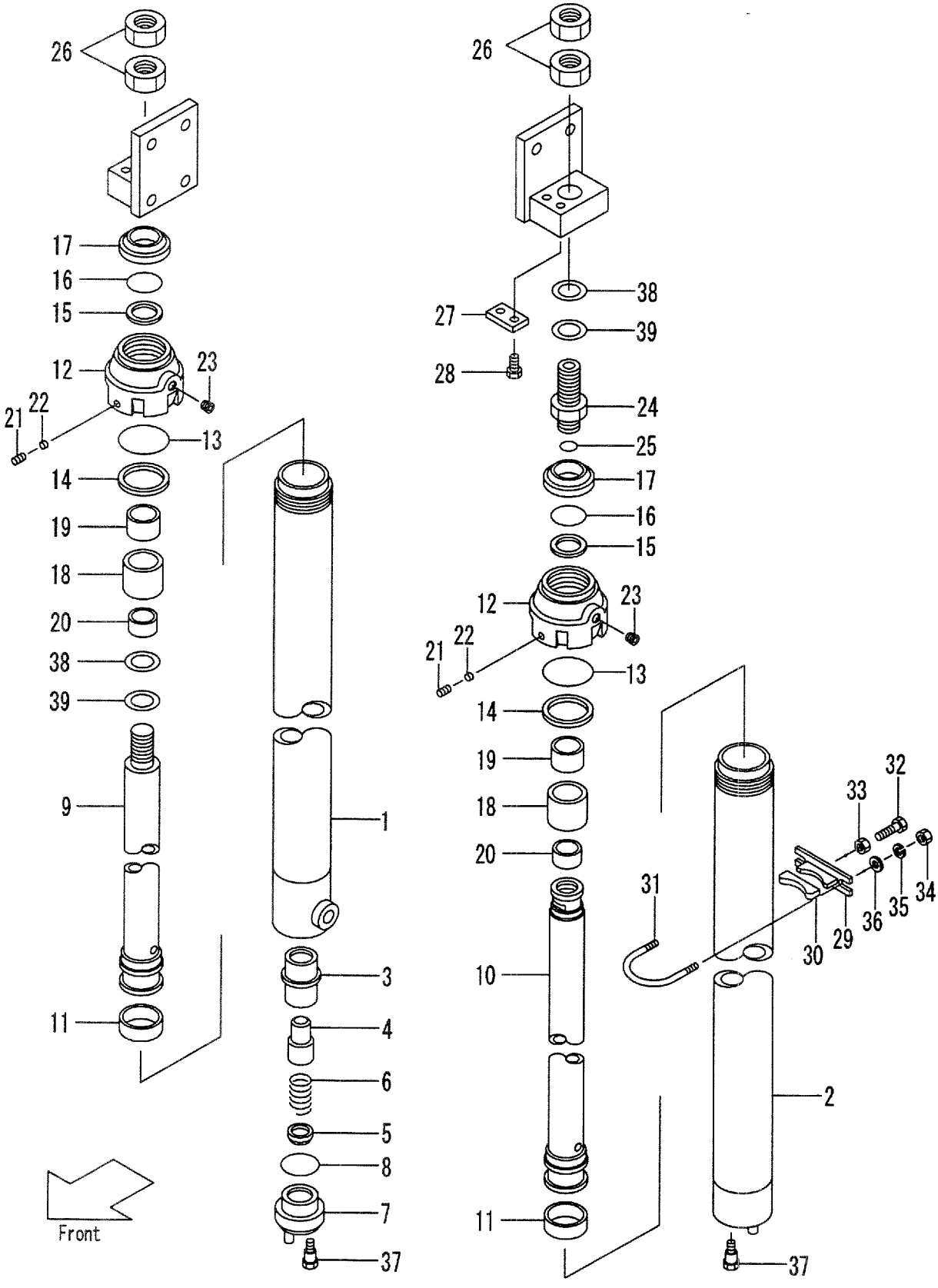

A:VFM24T(FD35,40,FG35,40)

Item No	Part No.	Mark	Description	Req'd	Remarks : Serial No.
-	524W3-86081		CYL-ASSY,LIFT,RH VFM370 ﾘﾌﾄｼﾘﾝﾀﾞｱｯｾﾝ	1	[EX] INC.1-23
-	524W3-86091		CYL-ASSY,LIFT,RH VFM375 ﾘﾌﾄｼﾘﾝﾀﾞｱｯｾﾝ	1	[EX] INC.1-23
-	524W3-86101		CYL-ASSY,LIFT,RH VFM400 ﾘﾌﾄｼﾘﾝﾀﾞｱｯｾﾝ	1	[EX] INC.1-23
-	524W3-86111		CYL-ASSY,LIFT,RH VFM425 ﾘﾌﾄｼﾘﾝﾀﾞｱｯｾﾝ	1	[EX] INC.1-23
-	524W3-86121		CYL-ASSY,LIFT,RH VFM450 ﾘﾌﾄｼﾘﾝﾀﾞｱｯｾﾝ	1	[EX] INC.1-23
-	524W3-86131		CYL-ASSY,LIFT,RH VFM475 ﾘﾌﾄｼﾘﾝﾀﾞｱｯｾﾝ	1	[EX] INC.1-23
-	524W3-86141		CYL-ASSY,LIFT,RH VFM500 ﾘﾌﾄｼﾘﾝﾀﾞｱｯｾﾝ	1	[EX] INC.1-23
-	524W3-86151		CYL-ASSY,LIFT,RH VFM550 ﾘﾌﾄｼﾘﾝﾀﾞｱｯｾﾝ	1	[EX] INC.1-23
-	524W3-86161		CYL-ASSY,LIFT,RH VFM600 ﾘﾌﾄｼﾘﾝﾀﾞｱｯｾﾝ	1	[EX] INC.1-23
-	224T0-50811		CYL-ASSY,LIFT,LH VFM250 ﾘﾌﾄｼﾘﾝﾀﾞｱｯｾﾝ	1	INC.2-25
-	224T0-50821		CYL-ASSY,LIFT,LH VFM270 ﾘﾌﾄｼﾘﾝﾀﾞｱｯｾﾝ	1	INC.2-25
-	224T0-50831		CYL-ASSY,LIFT,LH VFM275 ﾘﾌﾄｼﾘﾝﾀﾞｱｯｾﾝ	1	INC.2-25
-	224T0-50801		CYL-ASSY,LIFT,LH VFM300 ﾘﾌﾄｼﾘﾝﾀﾞｱｯｾﾝ	1	INC.2-25
-	224T0-50841		CYL-ASSY,LIFT,LH VFM325 ﾘﾌﾄｼﾘﾝﾀﾞｱｯｾﾝ	1	INC.2-25
-	224T0-50851		CYL-ASSY,LIFT,LH VFM330 ﾘﾌﾄｼﾘﾝﾀﾞｱｯｾﾝ	1	INC.2-25
-	224T0-50861		CYL-ASSY,LIFT,LH VFM350 ﾘﾌﾄｼﾘﾝﾀﾞｱｯｾﾝ	1	INC.2-25
-	224T0-50871		CYL-ASSY,LIFT,LH VFM366 ﾘﾌﾄｼﾘﾝﾀﾞｱｯｾﾝ	1	INC.2-25
-	224T0-50881		CYL-ASSY,LIFT,LH VFM370 ﾘﾌﾄｼﾘﾝﾀﾞｱｯｾﾝ	1	INC.2-25
-	224T0-50891		CYL-ASSY,LIFT,LH VFM375 ﾘﾌﾄｼﾘﾝﾀﾞｱｯｾﾝ	1	INC.2-25
-	224T0-50901		CYL-ASSY,LIFT,LH VFM400 ﾘﾌﾄｼﾘﾝﾀﾞｱｯｾﾝ	1	INC.2-25
-	224T0-50911		CYL-ASSY,LIFT,LH VFM425 ﾘﾌﾄｼﾘﾝﾀﾞｱｯｾﾝ	1	INC.2-25
-	224T0-50921		CYL-ASSY,LIFT,LH VFM450 ﾘﾌﾄｼﾘﾝﾀﾞｱｯｾﾝ	1	INC.2-25
-	224T0-50931		CYL-ASSY,LIFT,LH VFM475 ﾘﾌﾄｼﾘﾝﾀﾞｱｯｾﾝ	1	INC.2-25
-	224T0-50941		CYL-ASSY,LIFT,LH VFM500 ﾘﾌﾄｼﾘﾝﾀﾞｱｯｾﾝ	1	INC.2-25
-	224T0-50951		CYL-ASSY,LIFT,LH VFM550 ﾘﾌﾄｼﾘﾝﾀﾞｱｯｾﾝ	1	INC.2-25

FIG.181 LIFT CYLINDER (REAR)[VFM24T](3CYLINDER)

(M4040530) リフトシリンダ

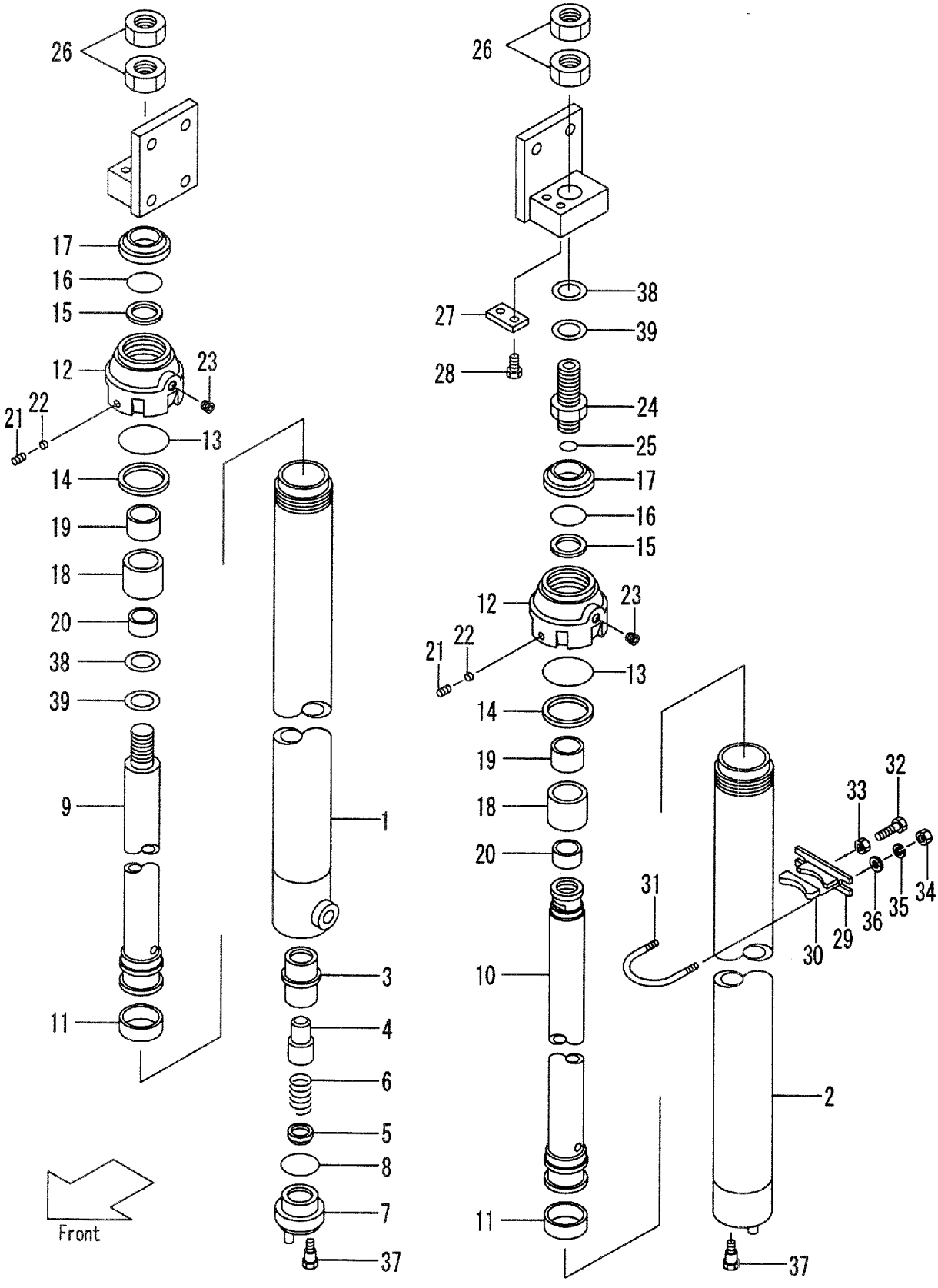

A:VFM24T(FD35,40,FG35,40)

Item No	Part No.	Mark	Description	Req'd	Remarks : Serial No.
-	224T0-50961		CYL-ASSY,LIFT,LH VFM600 リフトシリンダアッセン	1	INC.2-25
-	524W3-86211		CYL-ASSY,LIFT,LH VFM250 リフトシリンダアッセン	1	[EX] INC.2-25
-	524W3-86221		CYL-ASSY,LIFT,LH VFM270 リフトシリンダアッセン	1	[EX] INC.2-25
-	524W3-86231		CYL-ASSY,LIFT,LH VFM275 リフトシリンダアッセン	1	[EX] INC.2-25
-	524W3-86201		CYL-ASSY,LIFT,LH VFM300 リフトシリンダアッセン	1	[EX] INC.2-25
-	524W3-86241		CYL-ASSY,LIFT,LH VFM325 リフトシリンダアッセン	1	[EX] INC.2-25
-	524W3-86251		CYL-ASSY,LIFT,LH VFM330 リフトシリンダアッセン	1	[EX] INC.2-25
-	524W3-86261		CYL-ASSY,LIFT,LH VFM350 リフトシリンダアッセン	1	[EX] INC.2-25
-	524W3-86271		CYL-ASSY,LIFT,LH VFM366 リフトシリンダアッセン	1	[EX] INC.2-25
-	524W3-86281		CYL-ASSY,LIFT,LH VFM370 リフトシリンダアッセン	1	[EX] INC.2-25
-	524W3-86291		CYL-ASSY,LIFT,LH VFM375 リフトシリンダアッセン	1	[EX] INC.2-25
-	524W3-86301		CYL-ASSY,LIFT,LH VFM400 リフトシリンダアッセン	1	[EX] INC.2-25
-	524W3-86311		CYL-ASSY,LIFT,LH VFM425 リフトシリンダアッセン	1	[EX] INC.2-25
-	524W3-86321		CYL-ASSY,LIFT,LH VFM450 リフトシリンダアッセン	1	[EX] INC.2-25
-	524W3-86331		CYL-ASSY,LIFT,LH VFM475 リフトシリンダアッセン	1	[EX] INC.2-25
-	524W3-86341		CYL-ASSY,LIFT,LH VFM500 リフトシリンダアッセン	1	[EX] INC.2-25
-	524W3-86351		CYL-ASSY,LIFT,LH VFM550 リフトシリンダアッセン	1	[EX] INC.2-25
-	524W3-86361		CYL-ASSY,LIFT,LH VFM600 リフトシリンダアッセン	1	[EX] INC.2-25
1	224T0-51011		TUBE,RH VFM250 チューブ	1	
-	224T0-51021		TUBE,RH VFM270 チューブ	1	
-	224T0-51031		TUBE,RH VFM275 チューブ	1	
-	224T0-51001		TUBE,RH VFM300 チューブ	1	
-	224T0-51041		TUBE,RH VFM325 チューブ	1	
-	224T0-51051		TUBE,RH VFM330 チューブ	1	
-	224T0-51061		TUBE,RH VFM350 チューブ	1	
-	224T0-51071		TUBE,RH VFM366 チューブ	1	
-	224T0-51081		TUBE,RH VFM370 チューブ	1	
-	224T0-51091		TUBE,RH VFM375 チューブ	1	
-	224T0-51101		TUBE,RH VFM400 チューブ	1	
-	224T0-51111		TUBE,RH VFM425 チューブ	1	
-	214J0-81282		TUBE,RH VFM450 チューブ	1	
-	224T0-51121		TUBE,RH VFM475 チューブ	1	

FIG.181 LIFT CYLINDER (REAR)[VFM24T](3CYLINDER)

(M4040530) リフトシリンダ

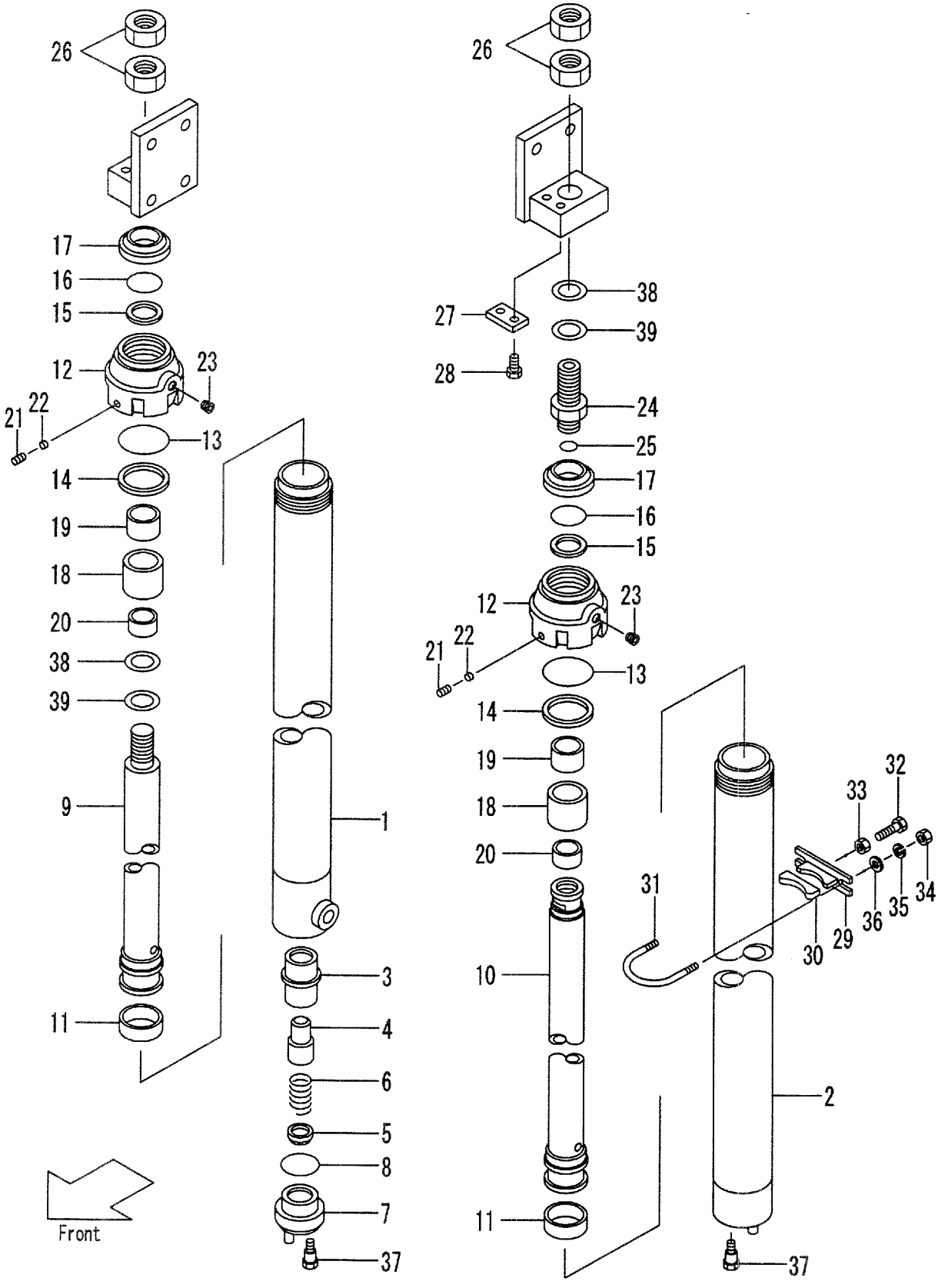

A:VFM24T(FD35,40,FG35,40)

Item No	Part No.	Mark	Description	Req'd	Remarks : Serial No.
-	224T0-51131		TUBE,RH VFM500 ﾁｭｰﾌﾞ	1	
-	224T0-51141		TUBE,RH VFM550 ﾁｭｰﾌﾞ	1	
-	224T0-51151		TUBE,RH VFM600 ﾁｭｰﾌﾞ	1	
-	228C0-51011		TUBE,RH VFM250 ﾁｭｰﾌﾞ	1	[EX]
-	228C0-51021		TUBE,RH VFM270 ﾁｭｰﾌﾞ	1	[EX]
-	228C0-51031		TUBE,RH VFM275 ﾁｭｰﾌﾞ	1	[EX]
-	228C0-51001		TUBE,RH VFM300 ﾁｭｰﾌﾞ	1	[EX]
-	228C0-51041		TUBE,RH VFM325 ﾁｭｰﾌﾞ	1	[EX]
-	228C0-51051		TUBE,RH VFM330 ﾁｭｰﾌﾞ	1	[EX]
-	228C0-51061		TUBE,RH VFM350 ﾁｭｰﾌﾞ	1	[EX]
-	228C0-51071		TUBE,RH VFM366 ﾁｭｰﾌﾞ	1	[EX]
-	228C0-51081		TUBE,RH VFM370 ﾁｭｰﾌﾞ	1	[EX]
-	228C0-51091		TUBE,RH VFM375 ﾁｭｰﾌﾞ	1	[EX]
-	228C0-51101		TUBE,RH VFM400 ﾁｭｰﾌﾞ	1	[EX]
-	228C0-51111		TUBE,RH VFM425 ﾁｭｰﾌﾞ	1	[EX]
-	228C0-51121		TUBE,RH VFM450 ﾁｭｰﾌﾞ	1	[EX]
-	228C0-51131		TUBE,RH VFM475 ﾁｭｰﾌﾞ	1	[EX]
-	228C0-51141		TUBE,RH VFM500 ﾁｭｰﾌﾞ	1	[EX]
-	228C0-51151		TUBE,RH VFM550 ﾁｭｰﾌﾞ	1	[EX]
-	228C0-51161		TUBE,RH VFM600 ﾁｭｰﾌﾞ	1	[EX]
2	224T0-51211		TUBE,LH VFM250 ﾁｭｰﾌﾞ	1	
-	224T0-51221		TUBE,LH VFM270 ﾁｭｰﾌﾞ	1	
-	224T0-51231		TUBE,LH VFM275 ﾁｭｰﾌﾞ	1	
-	224T0-51201		TUBE,LH VFM300 ﾁｭｰﾌﾞ	1	
-	224T0-51241		TUBE,LH VFM325 ﾁｭｰﾌﾞ	1	
-	224T0-51251		TUBE,LH VFM330 ﾁｭｰﾌﾞ	1	
-	224T0-51261		TUBE,LH VFM350 ﾁｭｰﾌﾞ	1	
-	224T0-81271		TUBE,LH VFM366 ﾁｭｰﾌﾞ	1	
-	224T0-51281		TUBE,LH VFM370 ﾁｭｰﾌﾞ	1	
-	224T0-51291		TUBE,LH VFM375 ﾁｭｰﾌﾞ	1	
-	224T0-51301		TUBE,LH VFM400 ﾁｭｰﾌﾞ	1	
-	224T0-51311		TUBE,LH VFM425 ﾁｭｰﾌﾞ	1	
-	224T0-51321		TUBE,LH VFM450 ﾁｭｰﾌﾞ	1	
-	224T0-51331		TUBE,LH VFM475 ﾁｭｰﾌﾞ	1	
-	224T0-51341		TUBE,LH VFM500 ﾁｭｰﾌﾞ	1	
-	224T0-51351		TUBE,LH VFM550 ﾁｭｰﾌﾞ	1	
-	224T0-51361		TUBE,LH VFM600 ﾁｭｰﾌﾞ	1	
-	228C0-51211		TUBE,LH VFM250 ﾁｭｰﾌﾞ	1	[EX]
-	228C0-51221		TUBE,LH VFM270 ﾁｭｰﾌﾞ	1	[EX]
-	228C0-51231		TUBE,LH VFM275 ﾁｭｰﾌﾞ	1	[EX]
-	228C0-51201		TUBE,LH VFM300 ﾁｭｰﾌﾞ	1	[EX]
-	228C0-51241		TUBE,LH VFM325 ﾁｭｰﾌﾞ	1	[EX]
-	228C0-51251		TUBE,LH VFM330 ﾁｭｰﾌﾞ	1	[EX]
-	228C0-51261		TUBE,LH VFM350 ﾁｭｰﾌﾞ	1	[EX]
-	228C0-51271		TUBE,LH VFM366 ﾁｭｰﾌﾞ	1	[EX]
-	228C0-51281		TUBE,LH VFM370 ﾁｭｰﾌﾞ	1	[EX]
-	228C0-51291		TUBE,LH VFM375 ﾁｭｰﾌﾞ	1	[EX]
-	228C0-51301		TUBE,LH VFM400 ﾁｭｰﾌﾞ	1	[EX]
-	228C0-51311		TUBE,LH VFM425 ﾁｭｰﾌﾞ	1	[EX]
-	228C0-51321		TUBE,LH VFM450 ﾁｭｰﾌﾞ	1	[EX]

FIG.181 LIFT CYLINDER (REAR)[VFM24T](3CYLINDER)

(M4040530) リフトシリンダ

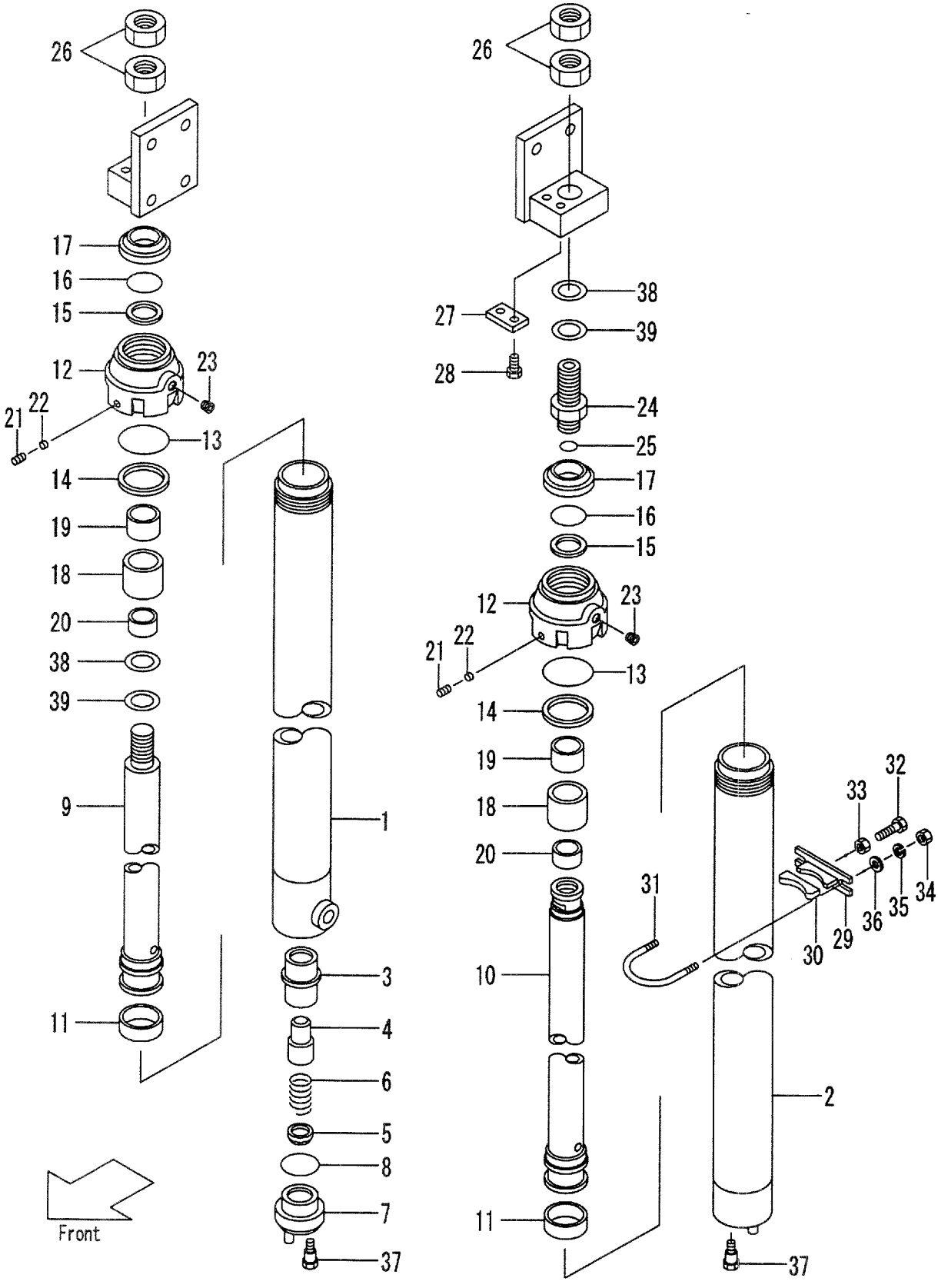

A:VFM24T(FD35,40,FG35,40)

Item No	Part No.	Mark	Description	Req'd	Remarks : Serial No.
-	228C0-51331		TUBE,LH VFM475 ﾁｭｰﾌﾞ	1	[EX]
-	228C0-51341		TUBE,LH VFM500 ﾁｭｰﾌﾞ	1	[EX]
-	228C0-51351		TUBE,LH VFM550 ﾁｭｰﾌﾞ	1	[EX]
-	228C0-51361		TUBE,LH VFM600 ﾁｭｰﾌﾞ	1	[EX]
3	53658-43021		SLEEVE ｽﾘｰﾌﾞ	1	(RH)
4	53658-43011		PISTON ﾋﾟｽﾄﾝ	1	(RH)
5	53658-43001		CHECK ﾁｪｯｸ	1	(RH)
6	53658-43031		SPRING ｽﾌﾟﾘﾝｸﾞ	1	(RH)
7	54238-43051		PLUG ﾌﾟﾗｸﾞ	1	(RH)
8	03320-00340	*	O-RING Oﾘﾝｸﾞ	1	(RH)
9	224T0-51411		ROD,PISTON,RH VFM250 ﾛｯﾄﾞ	1	
-	224T0-51421		ROD,PISTON,RH VFM270 ﾛｯﾄﾞ	1	
-	224T0-51431		ROD,PISTON,RH VFM275 ﾛｯﾄﾞ	1	
-	224T0-51401		ROD,PISTON,RH VFM300 ﾛｯﾄﾞ	1	
-	224T0-51441		ROD,PISTON,RH VFM325 ﾛｯﾄﾞ	1	
-	224T0-51451		ROD,PISTON,RH VFM330 ﾛｯﾄﾞ	1	
-	224T0-51461		ROD,PISTON,RH VFM350 ﾛｯﾄﾞ	1	
-	224T0-51471		ROD,PISTON,RH VFM366 ﾛｯﾄﾞ	1	
-	224T0-51481		ROD,PISTON,RH VFM370 ﾛｯﾄﾞ	1	
-	224T0-51491		ROD,PISTON,RH VFM375 ﾛｯﾄﾞ	1	
-	224T0-51501		ROD,PISTON,RH VFM400 ﾛｯﾄﾞ	1	
-	224T0-51511		ROD,PISTON,RH VFM425 ﾛｯﾄﾞ	1	
-	224T0-51521		ROD,PISTON,RH VFM450 ﾛｯﾄﾞ	1	
-	224T0-51531		ROD,PISTON,RH VFM475 ﾛｯﾄﾞ	1	
-	224T0-51541		ROD,PISTON,RH VFM500 ﾛｯﾄﾞ	1	
-	224T0-51551		ROD,PISTON,RH VFM550 ﾛｯﾄﾞ	1	
-	224T0-51561		ROD,PISTON,RH VFM600 ﾛｯﾄﾞ	1	
-	524W3-86411		ROD,PISTON,RH VFM250 ﾛｯﾄﾞ	1	[EX]
-	524W3-86421		ROD,PISTON,RH VFM270 ﾛｯﾄﾞ	1	[EX]
-	524W3-86431		ROD,PISTON,RH VFM275 ﾛｯﾄﾞ	1	[EX]
-	524W3-86401		ROD,PISTON,RH VFM300 ﾛｯﾄﾞ	1	[EX]
-	524W3-86441		ROD,PISTON,RH VFM325 ﾛｯﾄﾞ	1	[EX]
-	524W3-86451		ROD,PISTON,RH VFM330 ﾛｯﾄﾞ	1	[EX]
-	524W3-86461		ROD,PISTON,RH VFM350 ﾛｯﾄﾞ	1	[EX]
-	524W3-86471		ROD,PISTON,RH VFM366 ﾛｯﾄﾞ	1	[EX]
-	524W3-86481		ROD,PISTON,RH VFM370 ﾛｯﾄﾞ	1	[EX]
-	524W3-86491		ROD,PISTON,RH VFM375 ﾛｯﾄﾞ	1	[EX]
-	524W3-86501		ROD,PISTON,RH VFM400 ﾛｯﾄﾞ	1	[EX]
-	524W3-86511		ROD,PISTON,RH VFM425 ﾛｯﾄﾞ	1	[EX]
-	524W3-86521		ROD,PISTON,RH VFM450 ﾛｯﾄﾞ	1	[EX]
-	524W3-86531		ROD,PISTON,RH VFM475 ﾛｯﾄﾞ	1	[EX]
-	524W3-86541		ROD,PISTON,RH VFM500 ﾛｯﾄﾞ	1	[EX]
-	524W3-86551		ROD,PISTON,RH VFM550 ﾛｯﾄﾞ	1	[EX]
-	524W3-86561		ROD,PISTON,RH VFM600 ﾛｯﾄﾞ	1	[EX]
10	224T0-51611		ROD,PISTON,LH VFM250 ﾛｯﾄﾞ	1	
-	224T0-51621		ROD,PISTON,LH VFM270 ﾛｯﾄﾞ	1	
-	224T0-51631		ROD,PISTON,LH VFM275 ﾛｯﾄﾞ	1	
-	224T0-51601		ROD,PISTON,LH VFM300 ﾛｯﾄﾞ	1	
-	224T0-51641		ROD,PISTON,LH VFM325 ﾛｯﾄﾞ	1	
-	224T0-51651		ROD,PISTON,LH VFM330 ﾛｯﾄﾞ	1	

FIG.181 LIFT CYLINDER (REAR)[VFM24T](3CYLINDER)

(M4040530) リフトシリンダ

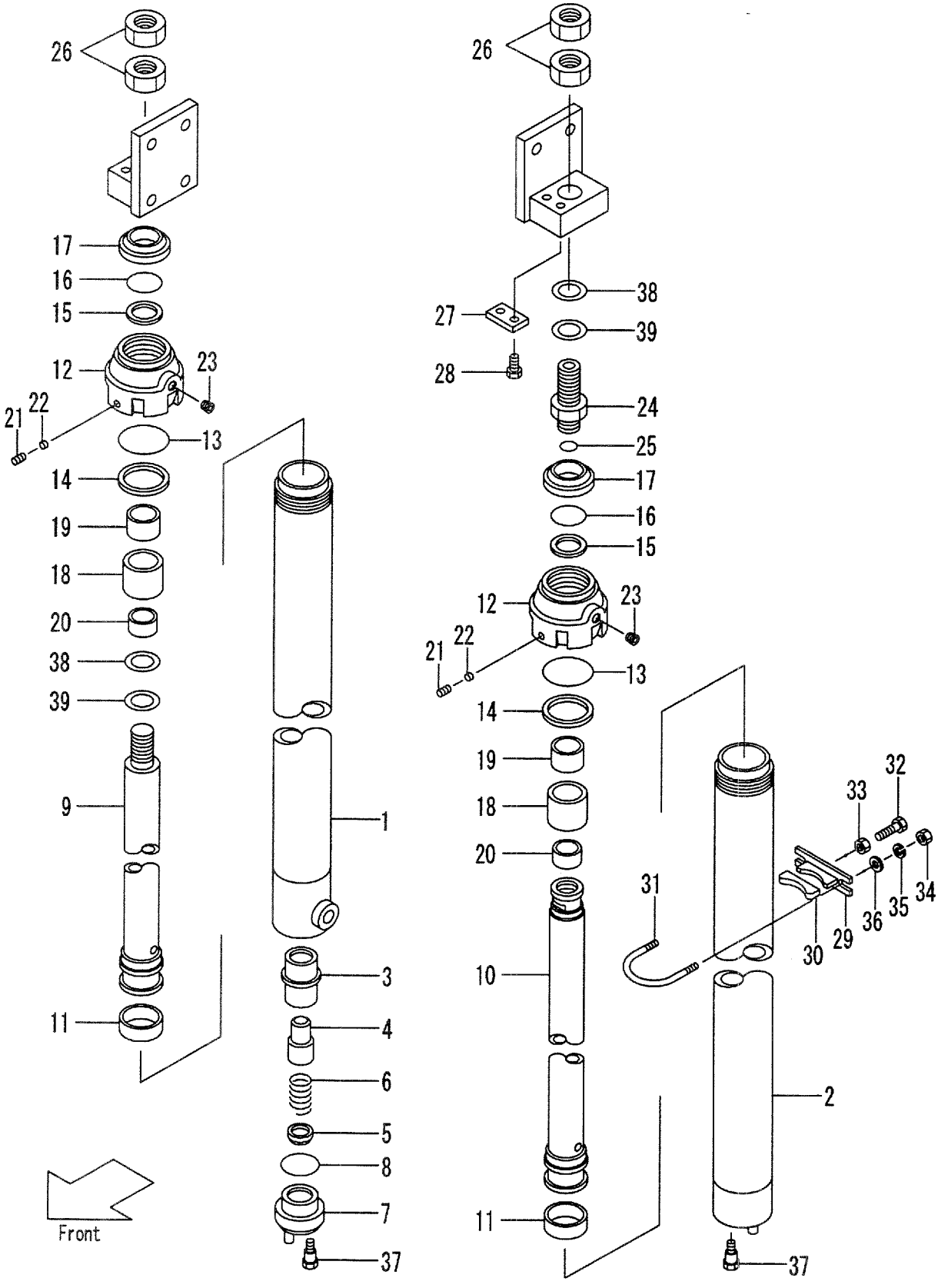

A:VFM24T(FD35,40,FG35,40)

Item No	Part No.	Mark	Description		Req'd	Remarks : Serial No.
-	224T0-51661		ROD,PISTON,LH VFM350	ﾛｯﾄﾞ	1	
-	224T0-51671		ROD,PISTON,LH VFM366	ﾛｯﾄﾞ	1	
-	224T0-51681		ROD,PISTON,LH VFM370	ﾛｯﾄﾞ	1	
-	224T0-51691		ROD,PISTON,LH VFM375	ﾛｯﾄﾞ	1	
-	224T0-51701		ROD,PISTON,LH VFM400	ﾛｯﾄﾞ	1	
-	224T0-51711		ROD,PISTON,LH VFM425	ﾛｯﾄﾞ	1	
-	224T0-51721		ROD,PISTON,LH VFM450	ﾛｯﾄﾞ	1	
-	224T0-51731		ROD,PISTON,LH VFM475	ﾛｯﾄﾞ	1	
-	224T0-51741		ROD,PISTON,LH VFM500	ﾛｯﾄﾞ	1	
-	224T0-51751		ROD,PISTON,LH VFM550	ﾛｯﾄﾞ	1	
-	224T0-51761		ROD,PISTON,LH VFM600	ﾛｯﾄﾞ	1	
-	524W3-86611		ROD,PISTON,LH VFM250	ﾛｯﾄﾞ	1	[EX]
-	524W3-86621		ROD,PISTON,LH VFM270	ﾛｯﾄﾞ	1	[EX]
-	524W3-86631		ROD,PISTON,LH VFM275	ﾛｯﾄﾞ	1	[EX]
-	524W3-86601		ROD,PISTON,LH VFM300	ﾛｯﾄﾞ	1	[EX]
-	524W3-86641		ROD,PISTON,LH VFM325	ﾛｯﾄﾞ	1	[EX]
-	524W3-86651		ROD,PISTON,LH VFM330	ﾛｯﾄﾞ	1	[EX]
-	524W3-86661		ROD,PISTON,LH VFM350	ﾛｯﾄﾞ	1	[EX]
-	524W3-86671		ROD,PISTON,LH VFM366	ﾛｯﾄﾞ	1	[EX]
-	524W3-86681		ROD,PISTON,LH VFM370	ﾛｯﾄﾞ	1	[EX]
-	524W3-86691		ROD,PISTON,LH VFM375	ﾛｯﾄﾞ	1	[EX]
-	524W3-86701		ROD,PISTON,LH VFM400	ﾛｯﾄﾞ	1	[EX]
-	524W3-86711		ROD,PISTON,LH VFM425	ﾛｯﾄﾞ	1	[EX]
-	524W3-86721		ROD,PISTON,LH VFM450	ﾛｯﾄﾞ	1	[EX]
-	524W3-86731		ROD,PISTON,LH VFM475	ﾛｯﾄﾞ	1	[EX]
-	524W3-86741		ROD,PISTON,LH VFM500	ﾛｯﾄﾞ	1	[EX]
-	524W3-86751		ROD,PISTON,LH VFM550	ﾛｯﾄﾞ	1	[EX]
-	524W3-86761		ROD,PISTON,LH VFM600	ﾛｯﾄﾞ	1	[EX]
11	27978-42421	*	WEARING	ｳｴｱﾘﾝｸﾞ	2	
-	23460-53181	*	WEARING	ｳｴｱﾘﾝｸﾞ	2	[EX]
12	224T0-53011		CAP	ｷｬｯﾌﾟ	2	
-	228C0-53011		CAP	ｷｬｯﾌﾟ	2	[EX]
13	214J8-42581	*	O-RING	Oﾘﾝｸﾞ	2	
-	03350-00650		O-RING	Oﾘﾝｸﾞ	2	[EX]
14	224T0-53031	*	RING,BACK-UP	ﾘﾝｸﾞ	2	
-	22658-52301		RING,BACK-UP	ﾘﾝｸﾞ	2	[EX]
15	22570-53201	*	PACKING	ﾊﾟｯｷﾝｸﾞ	2	
-	97103-35431		PACKING	ﾊﾟｯｷﾝｸﾞ	2	[EX]
16	24459-42291	*	RING,BACK-UP	ﾘﾝｸﾞ	2	
-	228C0-53021		RING,BACK-UP	ﾘﾝｸﾞ	2	[EX]
17	214J8-46001	*	SEAL,DUST	ｼｰﾙ	2	
-	224T8-46001		SEAL,DUST	ｼｰﾙ	2	[EX]
A2	228C0-53301		SLEEVE-ASSY	ｽﾘｰﾌﾞｱｯｾﾝ	1	INC.18,19
-	228C0-53301		SLEEVE-ASSY	ｽﾘｰﾌﾞｱｯｾﾝ	2	[EX] INC.18,19
18	214J8-42472		SLEEVE	ｽﾘｰﾌﾞ	2	
-	228C0-53311		SLEEVE	ｽﾘｰﾌﾞ	2	[EX]
19	214J8-42561		BUSHING	ﾌﾞｯｼﾝｸﾞ	2	
-	23460-53171		BUSHING	ﾌﾞｯｼﾝｸﾞ	2	[EX]
20	224T0-53401		SPACER	ｽﾍﾟｰｻ	2	(VFM400-600)
-	228C0-53401		SPACER	ｽﾍﾟｰｻ	2	[EX/VFM400-600]

FIG.181 LIFT CYLINDER (REAR)[VFM24T](3CYLINDER)

(M4040530) リフトシリンダ

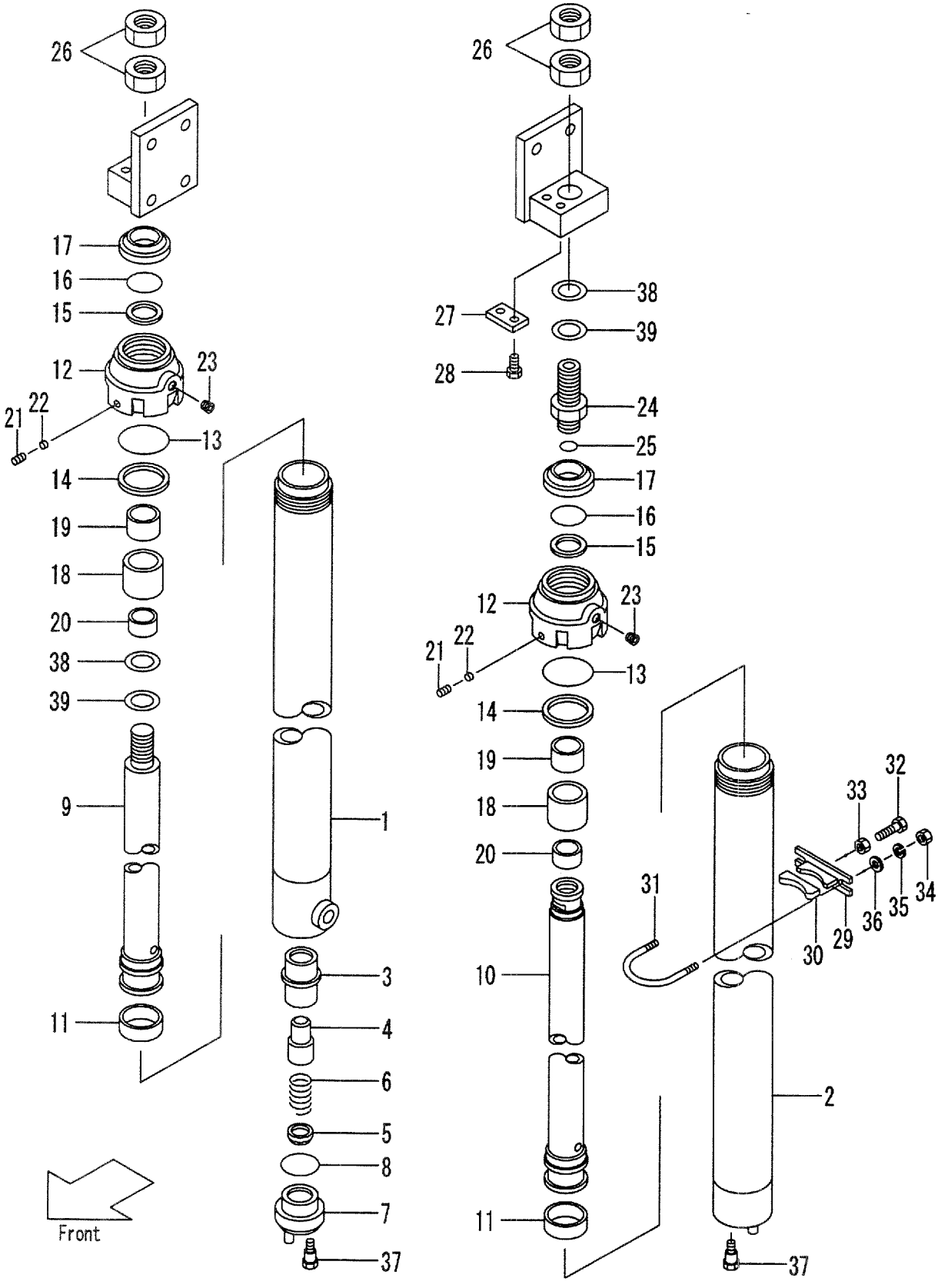

A:VFM24T(FD35,40,FG35,40)

Item No	Part No.	Mark	Description		Req'd	Remarks : Serial No.
21	25908-44101		PLUG	ﾌﾟﾗｸﾞ	2	
22	25908-44111		PLUG,NYLON	ﾌﾟﾗｸﾞ	2	
23	23870-52871		PLUG	ﾌﾟﾗｸﾞ	4	
24	224T0-53301		NIPPLE	ﾆｯﾌﾟﾙ	1	(LH)
25	03320-00240	*	O-RING	Oﾘﾝｸﾞ	1	(LH)
26	224T0-53311		NUT	ﾅｯﾄ	4	
27	23648-50161		PLATE	ﾌﾟﾚｰﾄ	1	(LH)
28	01184-10020		BOLT	ﾎﾞﾙﾄ	2	(LH)
29	224T8-42711		SUPPORT	ｻﾎﾟｰﾄ	2	
30	214A8-42631		RUBBER	ﾗﾊﾞｰ	2	
31	224T8-42701		U-BOLT	Uﾎﾞﾙﾄ	2	
32	01120-16045		BOLT	ﾎﾞﾙﾄ	2	
-	01120-16040		BOLT	ﾎﾞﾙﾄ	2	[EX]
33	01402-00016		NUT	ﾅｯﾄ	2	
34	01400-00010		NUT	ﾅｯﾄ	4	
35	02010-00010		WASHER	ﾜｯｼｬ	4	
36	02000-00010		WASHER	ﾜｯｼｬ	4	
37	214A0-82831		BOLT	ﾎﾞﾙﾄ	2	
38	211F8-22261		SHIM,T-0.5	ｼﾑ	5	
39	211F8-22271		SHIM,T-1.0	ｼﾑ	5	
K1	224T0-59811		KIT,OVERHAUL	ｵｰﾊﾞｰﾎｰﾙｷｯﾄ	2	INC.8,11,13-17,25

FIG.182 MAST PIPING [VFM24T](3CYLINDER)

(M4040550) マストパイピング

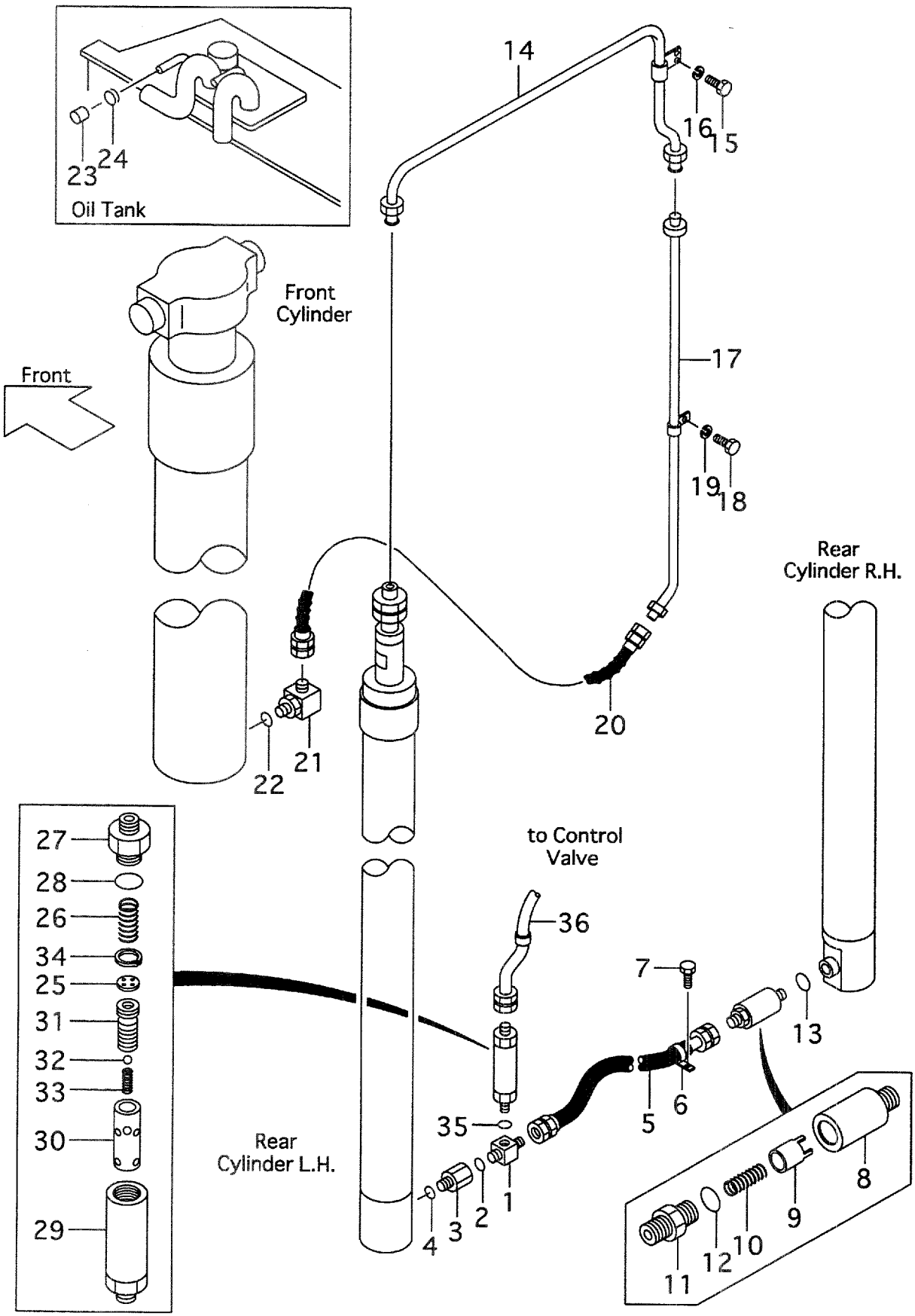

A:VFM24T(FD35,40,FG35,40)

Item No	Part No.	Mark	Description		Req'd	Remarks : Serial No.
A1	24609-43682		THREE-WAY-ASSY	ｽﾘｰｳｪｲｱｯｾﾝ	1	INC.1,2
1	NO PART NO.	#	THREE-WAY	ｽﾘｰｳｴｲ	1	
2	03320-00180		O-RING	Oﾘﾝｸﾞ	1	
A2	224T0-91011		NIPPLE-ASSY	ﾆｯﾌﾟﾙｱｯｾﾝ	1	INC.3,4
3	NO PART NO.	#	NIPPLE	ﾆｯﾌﾟﾙ	1	
4	03320-00180		O-RING	Oﾘﾝｸﾞ	1	
5	224T8-42861		HOSE,H.P.	ﾎｰｽ	1	
6	214A8-43081		CLIP	ｸﾘｯﾌﾟ	1	
7	01184-10020		BOLT	ﾎﾞﾙﾄ	1	
A3	24320-60601		VALVE-ASSY,CUT	ｶｯﾄﾊﾞﾙﾌﾞｱｯｾﾝ	1	INC.8-12
8	NO PART NO.	#	CASE	ｹｰｽ	1	
9	NO PART NO.	#	PISTON	ﾋﾟｽﾄﾝ	1	
10	24230-52701		SPRING	ｽﾌﾟﾘﾝｸﾞ	1	
A4	24320-58581		NIPPLE-ASSY	ﾆｯﾌﾟﾙｱｯｾﾝ	1	INC.11,12
11	NO PART NO.	#	NIPPLE	ﾆｯﾌﾟﾙ	1	
12	03320-00180		O-RING	Oﾘﾝｸﾞ	1	
13	03320-00180		O-RING	Oﾘﾝｸﾞ	1	
14	224T0-62201		PIPE	ﾊﾟｲﾌﾟ	1	
15	01100-08018		BOLT	ﾎﾞﾙﾄ	1	
16	02010-00008		WASHER	ﾜｯｼｬ	1	
17	224T0-60111		PIPE VFM250	ﾊﾟｲﾌﾟ	1	
-	224T0-60121		PIPE VFM270	ﾊﾟｲﾌﾟ	1	
-	224T0-60131		PIPE VFM275	ﾊﾟｲﾌﾟ	1	
-	224T0-60101		PIPE VFM300	ﾊﾟｲﾌﾟ	1	
-	224T0-60141		PIPE VFM325	ﾊﾟｲﾌﾟ	1	
-	224T0-60151		PIPE VFM330	ﾊﾟｲﾌﾟ	1	
-	224T0-60161		PIPE VFM350	ﾊﾟｲﾌﾟ	1	
-	224T0-60171		PIPE VFM366	ﾊﾟｲﾌﾟ	1	
-	224T0-60181		PIPE VFM370	ﾊﾟｲﾌﾟ	1	
-	224T0-60191		PIPE VFM375	ﾊﾟｲﾌﾟ	1	
-	224T0-60201		PIPE VFM400	ﾊﾟｲﾌﾟ	1	
-	224T0-60211		PIPE VFM425	ﾊﾟｲﾌﾟ	1	
-	224T0-60221		PIPE VFM450	ﾊﾟｲﾌﾟ	1	
-	224T0-60231		PIPE VFM475	ﾊﾟｲﾌﾟ	1	
-	224T0-60241		PIPE VFM500	ﾊﾟｲﾌﾟ	1	
-	224T0-60251		PIPE VFM550	ﾊﾟｲﾌﾟ	1	
-	224T0-60261		PIPE VFM600	ﾊﾟｲﾌﾟ	1	
18	01100-08018		BOLT	ﾎﾞﾙﾄ	1	(VFM250-375)
-	01100-08018		BOLT	ﾎﾞﾙﾄ	2	(VFM400-500)
-	01100-08018		BOLT	ﾎﾞﾙﾄ	3	(VFM550-600)
19	02010-00008		WASHER	ﾜｯｼｬ	1	(VFM250-375)
-	02010-00008		WASHER	ﾜｯｼｬ	2	(VFM400-500)
-	02010-00008		WASHER	ﾜｯｼｬ	3	(VFM550-600)
20	224T0-62501		HOSE,HP	ﾎｰｽ	1	
A5	24320-58521		ELBOW-ASSY	ｴﾙﾎﾞｱｯｾﾝ	1	INC.21,22
21	24310-92571		ELBOW	ｴﾙﾎﾞ	1	
22	03320-00240		O-RING	Oﾘﾝｸﾞ	1	
23	24356-13011		CAP	ｷｬｯﾌﾟ	1	
24	04911-00032		CLIP	ｸﾘｯﾌﾟ	1	
A6	224T8-41002		REGULATOR-ASSY,FLOW	ﾚｷﾞｭﾚｰﾀｱｯｾﾝ	1	INC.25-34

FIG.182 MAST PIPING [VFM24T](3CYLINDER)

(M4040550) マストパイピング

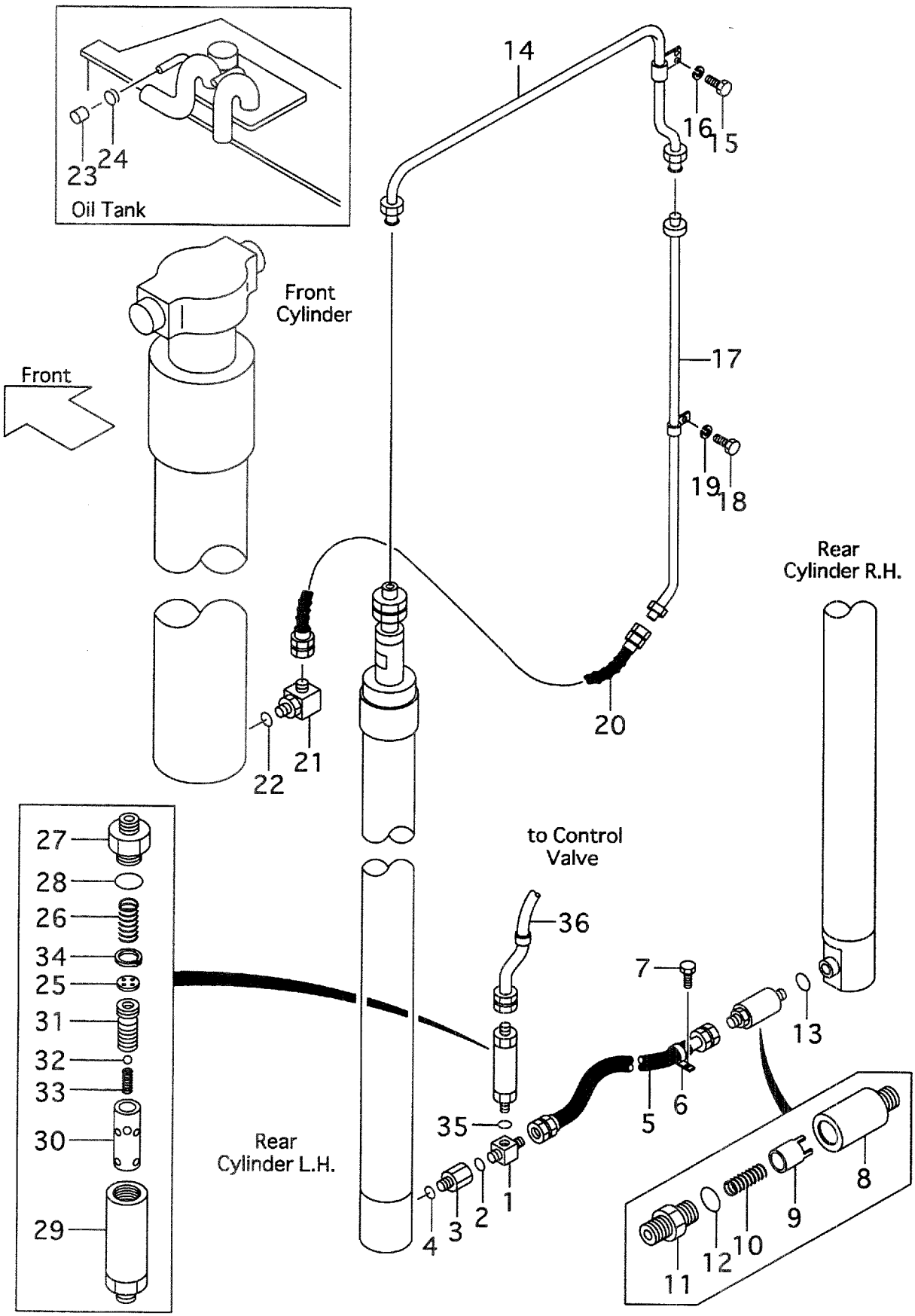

A:VFM24T(FD35,40,FG35,40)

Item No	Part No.	Mark	Description		Req'd	Remarks : Serial No.
25	NO PART NO.	#	PLATE	ﾌﾟﾚｰﾄ	1	
26	24609-43631		SPRING	ｽﾌﾟﾘﾝｸﾞ	1	
27	NO PART NO.	#	NIPPLE	ﾆｯﾌﾟﾙ	1	
28	03300-00360		O-RING	Oﾘﾝｸﾞ	1	(OLD PART)
-	03320-00360		O-RING	Oﾘﾝｸﾞ	1	(NEW PART)
29	NO PART NO.	#	CASE	ｹｰｽ	1	
30	NO PART NO.	#	SLEEVE	ｽﾘｰﾌﾞ	1	
31	NO PART NO.	#	PISTON	ﾋﾟｽﾄﾝ	1	
32	24459-42951		BALL	ﾎﾞｰﾙ	1	
33	214A8-44151		SPRING	ｽﾌﾟﾘﾝｸﾞ	1	
34	02110-00020		RING,SNAP	ｽﾅｯﾌﾟﾘﾝｸﾞ	1	
35	03320-00240		O-RING	Oﾘﾝｸﾞ	1	
36	224T8-02101		HOSE,HP	ﾎｰｽ	1	

FIG.183 FORK & LIFT BRACKET [VFM24X](4 CYLINDER)

(M4040640) フォーク&リフトブラケット

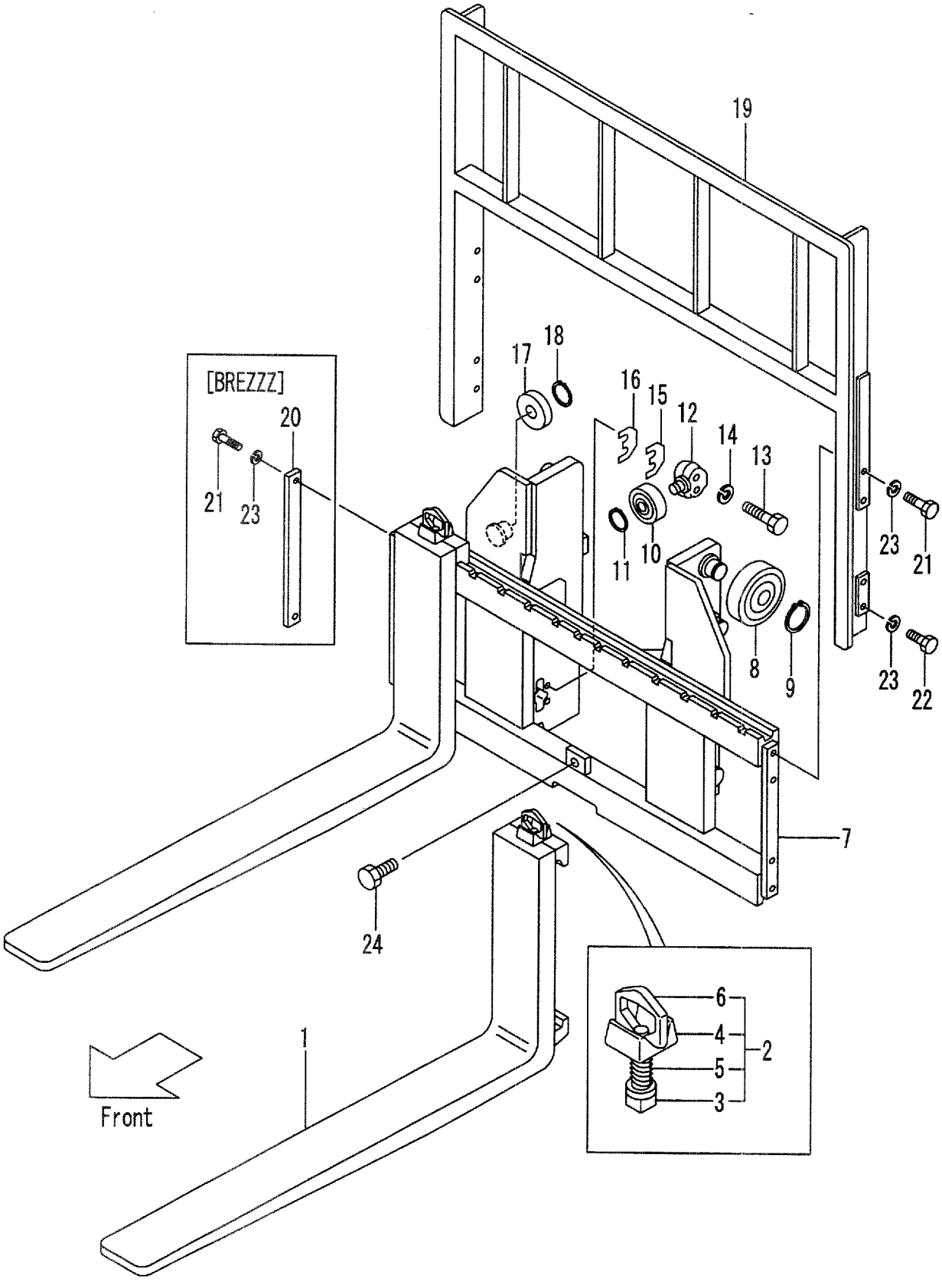

A:VFM24X(FD35,40,FG35,40)

Item No	Part No.	Mark	Description		Req'd	Remarks : Serial No.
1	24328-10514		FORK	ﾌｫｰｸ	2	(L=1070) INC.3-6
-	24328-10503		FORK	ﾌｫｰｸ	2	[LF100] INC.3-6
-	24328-10514		FORK	ﾌｫｰｸ	2	[LF107] INC.3-6
-	24328-10523		FORK	ﾌｫｰｸ	2	[LF110] INC.3-6
-	24328-10533		FORK	ﾌｫｰｸ	2	[LF120] INC.3-6
-	24328-10544		FORK	ﾌｫｰｸ	2	[LF122] INC.3-6
-	24328-12304		FORK	ﾌｫｰｸ	2	[LF130] INC.3-6
-	24328-10554		FORK	ﾌｫｰｸ	2	[LF137] INC.3-6
-	24328-12314		FORK	ﾌｫｰｸ	2	[LF140] INC.3-6
-	24328-12324		FORK	ﾌｫｰｸ	2	[LF150] INC.3-6
-	24328-10564		FORK	ﾌｫｰｸ	2	[LF152] INC.3-6
-	24328-12334		FORK	ﾌｫｰｸ	2	[LF160] INC.3-6
-	24328-10574		FORK	ﾌｫｰｸ	2	[LF167] INC.3-6
-	24328-12344		FORK	ﾌｫｰｸ	2	[LF170] INC.3-6
-	24328-12354		FORK	ﾌｫｰｸ	2	[LF180] INC.3-6
-	24328-10584		FORK	ﾌｫｰｸ	2	[LF182] INC.3-6
-	24328-12364		FORK	ﾌｫｰｸ	2	[LF190] INC.3-6
-	24328-10594		FORK	ﾌｫｰｸ	2	[LF197] INC.3-6
-	24328-12374		FORK	ﾌｫｰｸ	2	[LF200] INC.3-6
-	24328-12384		FORK	ﾌｫｰｸ	2	[LF210] INC.3-6
-	24328-12604		FORK	ﾌｫｰｸ	2	[LF212] INC.3-6
-	24328-10614		FORK	ﾌｫｰｸ	2	[LF220] INC.3-6
-	24328-10624		FORK	ﾌｫｰｸ	2	[LF227] INC.3-6
-	24328-12394		FORK	ﾌｫｰｸ	2	[LF230] INC.3-6
2	214J8-11001		STOPPER,FORK	ｽﾄｯﾊﾟ	2	MAST NO.1-1 INC.3-6
-	214J8-11002		STOPPER,FORK	ｽﾄｯﾊﾟ	2	MAST NO.2-
3	NO PART NO.	#	STOPPER	ｽﾄｯﾊﾟ	2	MAST NO.1-1
4	214J8-12001		HEAD	ﾍｯﾄﾞ	2	MAST NO.1-1
5	214J8-12031		SPRING	ｽﾌﾟﾘﾝｸﾞ	2	MAST NO.1-1
6	214A8-12021		HANDLE	ﾊﾝﾄﾞﾙ	2	MAST NO.1-1
7	224X0-60001		BRACKET,LIFT	ﾌﾞﾗｹｯﾄ	1	MAST NO.1-2
-	224X0-60002		BRACKET,LIFT	ﾌﾞﾗｹｯﾄ	1	MAST NO.3-
8	23818-20701		ROLLER,END,143.5	ﾛｰﾗ	6	
-	23958-22081		ROLLER,END,144.0	ﾛｰﾗ	(6)	
9	02100-00050		RING,SNAP	ｽﾅｯﾌﾟﾘﾝｸﾞ	6	
A1	24319-40152		ROLLER-ASSY,SIDE	ｻｲﾄﾞﾛｰﾗｱｯｾﾝ	2	INC.10-12
10	22198-22341		ROLLER,END,91.5	ﾛｰﾗ	2	
11	02100-00030		RING,SNAP	ｽﾅｯﾌﾟﾘﾝｸﾞ	2	
12	24609-42131		SHAFT	ｼｬﾌﾄ	2	
13	01103-16065		BOLT	ﾎﾞﾙﾄ	4	
14	02011-00016		WASHER	ﾜｯｼｬ	4	
15	24609-42151		SHIM,T-1.0	ｼﾑ	8	
16	24609-42161		SHIM,T-0.2	ｼﾑ	8	
17	22198-22341		ROLLER,END,91.5	ﾛｰﾗ	2	
18	02100-00030		RING,SNAP	ｽﾅｯﾌﾟﾘﾝｸﾞ	2	
19	224T8-22301		BACKREST	ﾊﾞｯｸﾚｽﾄ	1	
20	24450-92021		PLATE	ﾌﾟﾚｰﾄ	2	[BREZZZ]
21	01100-14030		BOLT	ﾎﾞﾙﾄ	4	

FIG.183 FORK & LIFT BRACKET [VFM24X](4 CYLINDER)

(M4040640) フォーク&リフトブラケット

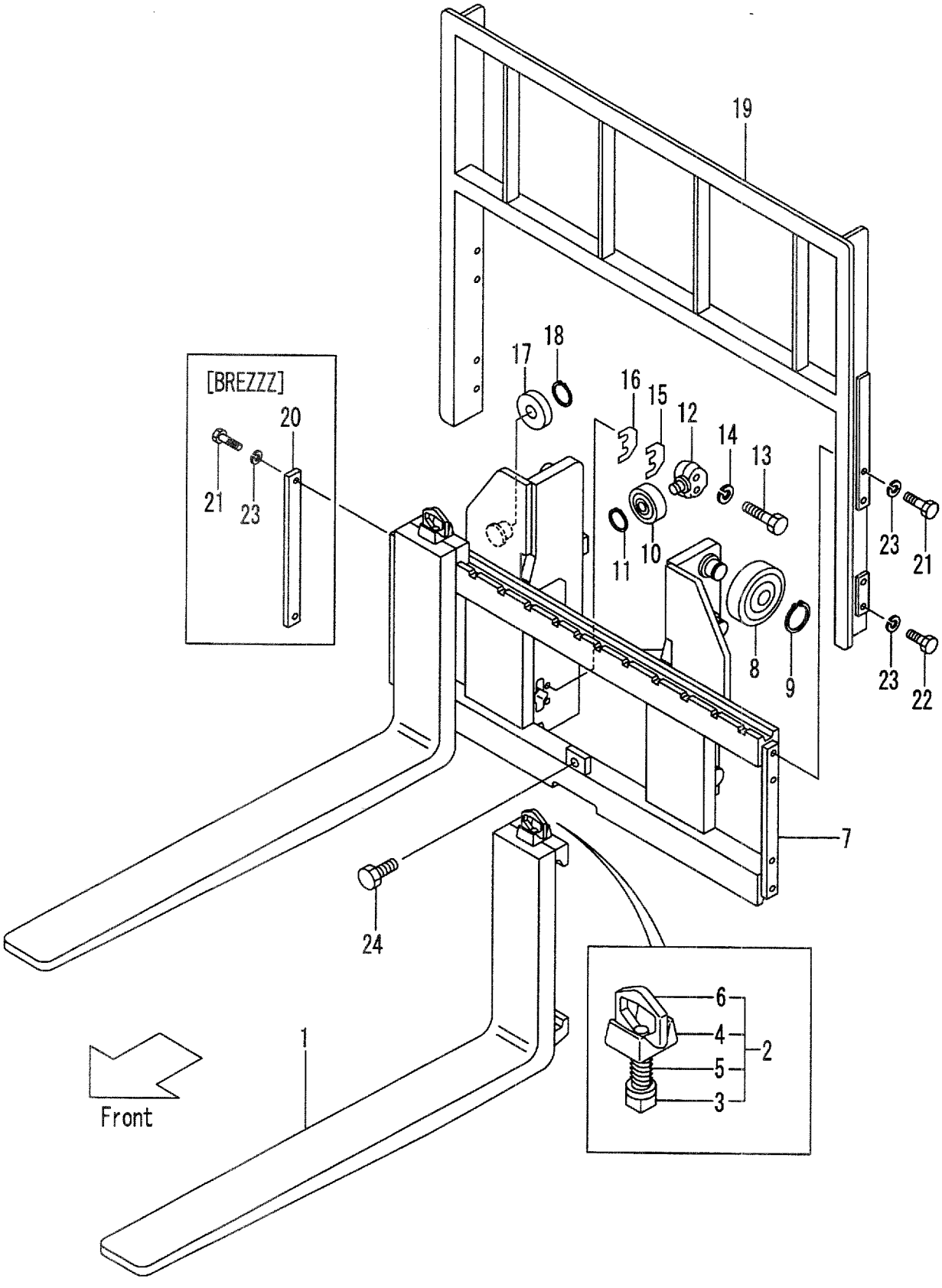

A:VFM24X(FD35,40,FG35,40)

Item No	Part No.	Mark	Description		Req'd	Remarks : Serial No.
-	01100-14030		BOLT	ﾎﾞﾙﾄ	4	[BREZZZ]
22	01100-14025		BOLT	ﾎﾞﾙﾄ	4	
23	02010-00014		WASHER	ﾜｯｼｬ	8	
-	02010-00014		WASHER	ﾜｯｼｬ	4	[BREZZZ]
24	01184-12025		BOLT	ﾎﾞﾙﾄ	1	

FIG.184 MAST [VFM24X](4 CYLINDER)

(M4040440) マスト

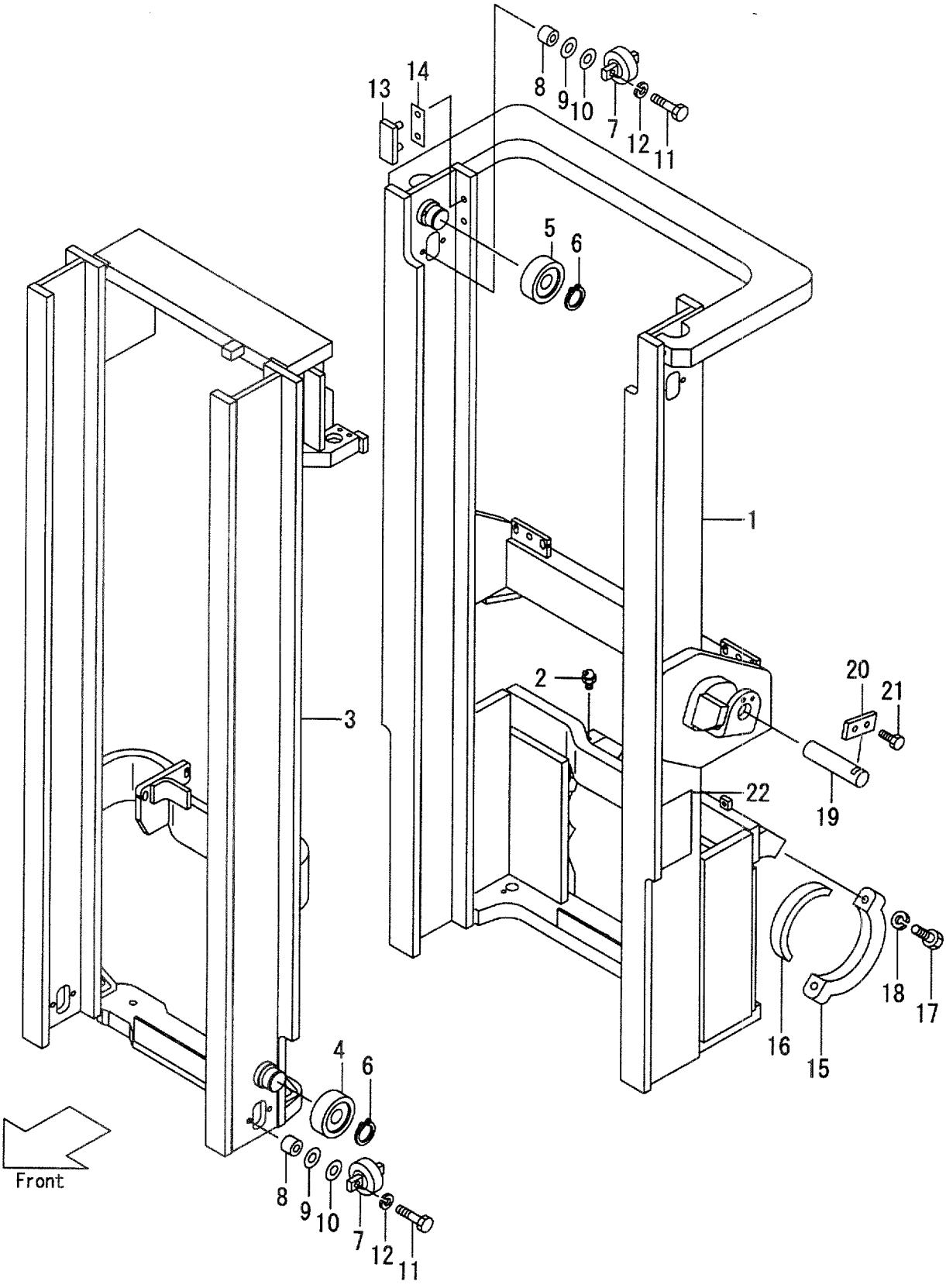

A:VFM24X(FD35,40,FG35,40)

Item No	Part No.	Mark	Description		Req'd	Remarks : Serial No.
1	224X0-40001		MAST,OUTER VFM300	アウタマスト	1	MAST NO.1-2
-	224X0-40002		MAST,OUTER VFM300	アウタマスト	1	MAST NO.3-
-	224X0-40011		MAST,OUTER VFM325	アウタマスト	1	MAST NO.1-2
-	224X0-40012		MAST,OUTER VFM325	アウタマスト	1	
-	224X0-40021		MAST,OUTER VFM330	アウタマスト	1	MAST NO.1-2
-	224X0-40022		MAST,OUTER VFM330	アウタマスト	1	MAST NO.3-
-	224X0-40031		MAST,OUTER VFM350	アウタマスト	1	MAST NO.1-2
-	224X0-40032		MAST,OUTER VFM350	アウタマスト	1	MAST NO.3-
-	224X0-40041		MAST,OUTER VFM366	アウタマスト	1	MAST NO.1-2
-	224X0-40042		MAST,OUTER VFM366	アウタマスト	1	MAST NO.3-
-	224X0-40051		MAST,OUTER VFM370	アウタマスト	1	MAST NO.1-2
-	224X0-40052		MAST,OUTER VFM370	アウタマスト	1	MAST NO.3-
-	224X0-40061		MAST,OUTER VFM375	アウタマスト	1	MAST NO.1-2
-	224X0-40062		MAST,OUTER VFM375	アウタマスト	1	MAST NO.3-
-	224X0-40071		MAST,OUTER VFM400	アウタマスト	1	MAST NO.1-2
-	224X0-40072		MAST,OUTER VFM400	アウタマスト	1	MAST NO.3-
2	04901-00160		FITTING	ﾌｨｯﾃｨﾝｸﾞ	2	
3	224X0-40201		MAST,INNER VFM300	インナマスト	1	
-	224X0-40211		MAST,INNER VFM325	インナマスト	1	
-	224X0-40221		MAST,INNER VFM330	インナマスト	1	
-	224X0-40231		MAST,INNER VFM350	インナマスト	1	
-	224X0-40241		MAST,INNER VFM366	インナマスト	1	
-	224X0-40251		MAST,INNER VFM370	インナマスト	1	
-	224X0-40261		MAST,INNER VFM375	インナマスト	1	
-	224X0-40271		MAST,INNER VFM400	インナマスト	1	
4	23818-20701		ROLLER,END,143.5	ローラ	2	
-	23958-22081		ROLLER,END,144.0	ローラ	(2)	
5	23818-20701		ROLLER,END,143.5	ローラ	2	
6	02100-00050		RING,SNAP	ｽﾅｯﾌﾟﾘﾝｸﾞ	4	
7	23818-30301		ROLLER,SIDE	ローラ	4	
8	23818-30071		SPACER	ｽﾍﾟｰｻ	8	
9	22548-34051		SHIM,T-0.5	シム	16	
10	22548-34061		SHIM,T-1.0	シム	8	
11	01100-12045		BOLT	ﾎﾞﾙﾄ	8	
12	02010-00012		WASHER	ﾜｯｼｬ	8	
13	22678-32001		SLIPPER	ｽﾘｯﾊﾟ	2	
14	22679-43231		SHIM	シム	4	
15	224T8-02201		CAP	ｷｬｯﾌﾟ	2	
16	224T8-02001		BUSHING	ﾌﾞｯｼﾝｸﾞ	2	
17	01103-20085		BOLT	ﾎﾞﾙﾄ	4	
18	02010-00020		WASHER	ﾜｯｼｬ	4	
19	224T8-52501		PIN	ﾋﾟﾝ	2	
20	23648-50161		PLATE	ﾌﾟﾚｰﾄ	2	
21	01184-10020		BOLT	ﾎﾞﾙﾄ	4	
22	23678-06002		PLATE,NAME	ﾌﾟﾚｰﾄ	1	

FIG.185 LIFT CYLINDER (FRONT)[VFM24X](4 CYLINDER)

(M40405A0) リフトシリンダ

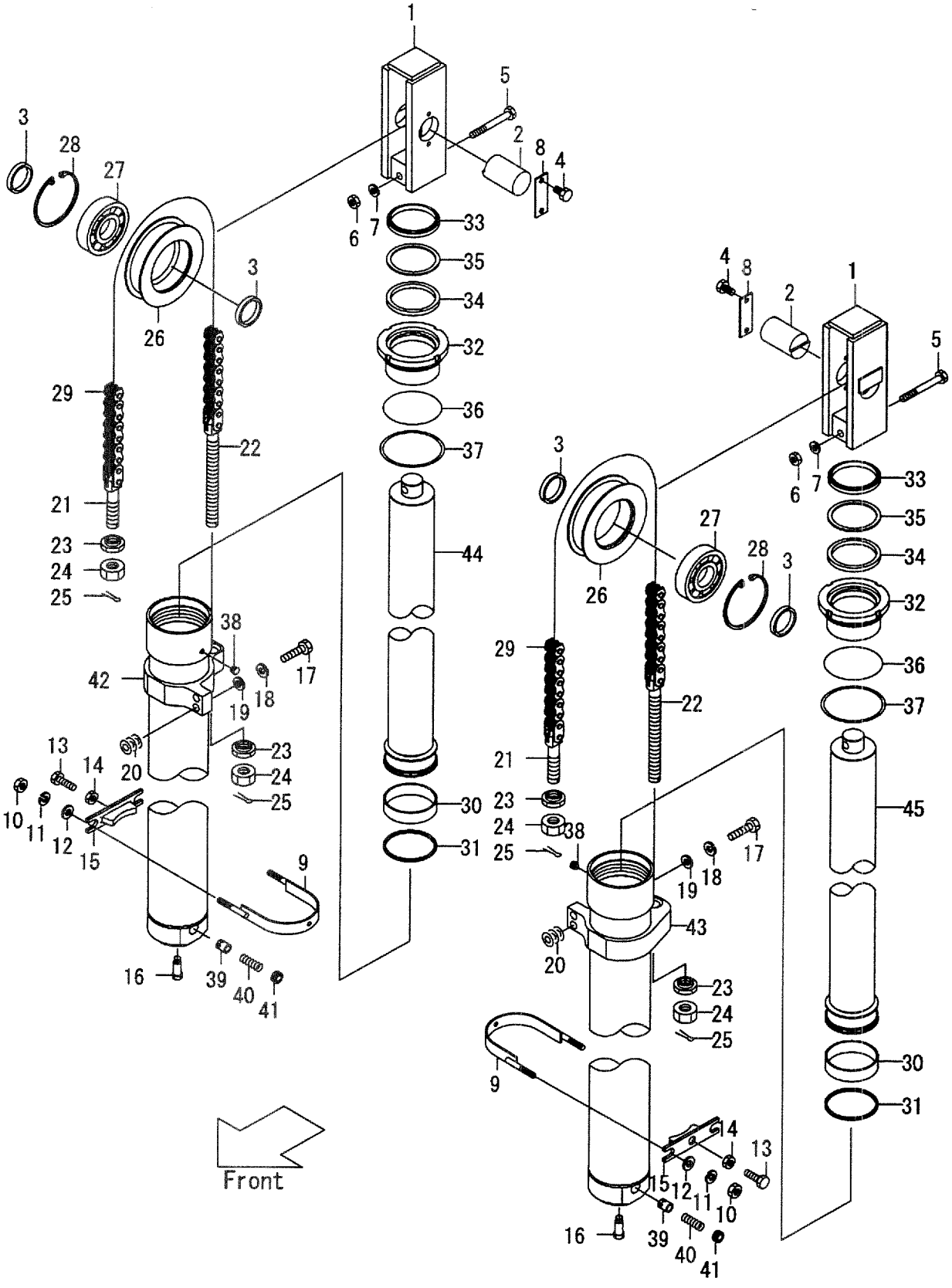

A:VFM24X(FD35,40,FG35,40)

Item No	Part No.	Mark	Description		Req'd	Remarks : Serial No.
1	224X0-52001		HEAD,PISTON	ﾍｯﾄﾞ	2	
2	224X0-52091		PIN	ﾋﾟﾝ	2	
3	224X0-52081		SPACER	ｽﾍﾟｰｻ	4	
4	01184-08015		BOLT	ﾎﾞﾙﾄ	4	
5	01100-12100		BOLT	ﾎﾞﾙﾄ	2	
6	01400-00012		NUT	ﾅｯﾄ	2	
7	02010-00012		WASHER	ﾜｯｼｬ	2	
8	224X0-52191		PLATE	ﾌﾟﾚｰﾄ	2	
9	224X0-52131		SUPPORT,SYL	ｻﾎﾟｰﾄ	2	
10	01400-00010		NUT	ﾅｯﾄ	4	
11	02010-20010		WASHER	ﾜｯｼｬ	4	
12	02000-20010		WASHER	ﾜｯｼｬ	4	
13	232A8-42201		BOLT	ﾎﾞﾙﾄ	2	
14	01402-00012		NUT	ﾅｯﾄ	2	
15	25788-42491		SUPPORT	ｻﾎﾟｰﾄ	2	
16	224T0-82561		BOLT	ﾎﾞﾙﾄ	2	
17	01103-10040		BOLT	ﾎﾞﾙﾄ	4	
18	02011-00010		WASHER	ﾜｯｼｬ	4	
19	02000-00010		WASHER	ﾜｯｼｬ	4	
20	22018-30261		SHIM	ｼﾑ	12	
21	23918-42681		PIN,ANCHOR	ﾋﾟﾝ	2	
22	24329-45441		PIN,ANCHOR	ﾋﾟﾝ	2	
23	23818-30271		NUT	ﾅｯﾄ	4	
24	01402-00022		NUT	ﾅｯﾄ	4	
25	02200-03040		PIN	ﾋﾟﾝ	4	
A1	224X0-52061		SHEAVE-ASSY	ｼｰﾌﾞｱｯｾﾝ	2	INC.26-28
26	224X0-52071		SHEAVE	ｼｰﾌﾞ	2	
27	03041-06310		BRG,BALL	ﾍﾞｱﾘﾝｸﾞ	2	
28	02110-00110		RING,SNAP	ｽﾅｯﾌﾟﾘﾝｸﾞ	2	
29	23918-45511		CHAIN VFM300	ﾁｪｰﾝ	2	
-	23918-45531		CHAIN VFM325	ﾁｪｰﾝ	2	
-	23918-45551		CHAIN VFM330	ﾁｪｰﾝ	2	
-	23918-45571		CHAIN VFM350	ﾁｪｰﾝ	2	
-	23918-45591		CHAIN VFM366	ﾁｪｰﾝ	2	
-	23918-45631		CHAIN VFM400	ﾁｪｰﾝ	2	
A2	224X0-50001		CYL-ASSY,LIFT,RH VFM300	ﾘﾌﾄｼﾘﾝﾀﾞｱｯｾﾝ	1	MAST NO.1-2 INC.30-45
-	224X0-50002		CYL-ASSY,LIFT,RH VFM300	ﾘﾌﾄｼﾘﾝﾀﾞｱｯｾﾝ	1	MAST NO.3- INC.30-45
-	224X0-50011		CYL-ASSY,LIFT,RH VFM325	ﾘﾌﾄｼﾘﾝﾀﾞｱｯｾﾝ	1	MAST NO.1-2 INC.30-45
-	224X0-50012		CYL-ASSY,LIFT,RH VFM325	ﾘﾌﾄｼﾘﾝﾀﾞｱｯｾﾝ	1	MAST NO.3- INC.30-45
-	224X0-50021		CYL-ASSY,LIFT,RH VFM330	ﾘﾌﾄｼﾘﾝﾀﾞｱｯｾﾝ	1	MAST NO.1-2 INC.30-45
-	224X0-50022		CYL-ASSY,LIFT,RH VFM330	ﾘﾌﾄｼﾘﾝﾀﾞｱｯｾﾝ	1	MAST NO.3- INC.30-45
-	224X0-50031		CYL-ASSY,LIFT,RH VFM350	ﾘﾌﾄｼﾘﾝﾀﾞｱｯｾﾝ	1	MAST NO.1-2 INC.30-45

FIG.185 LIFT CYLINDER (FRONT)[VFM24X](4 CYLINDER)

(M40405A0) リフトシリンダ

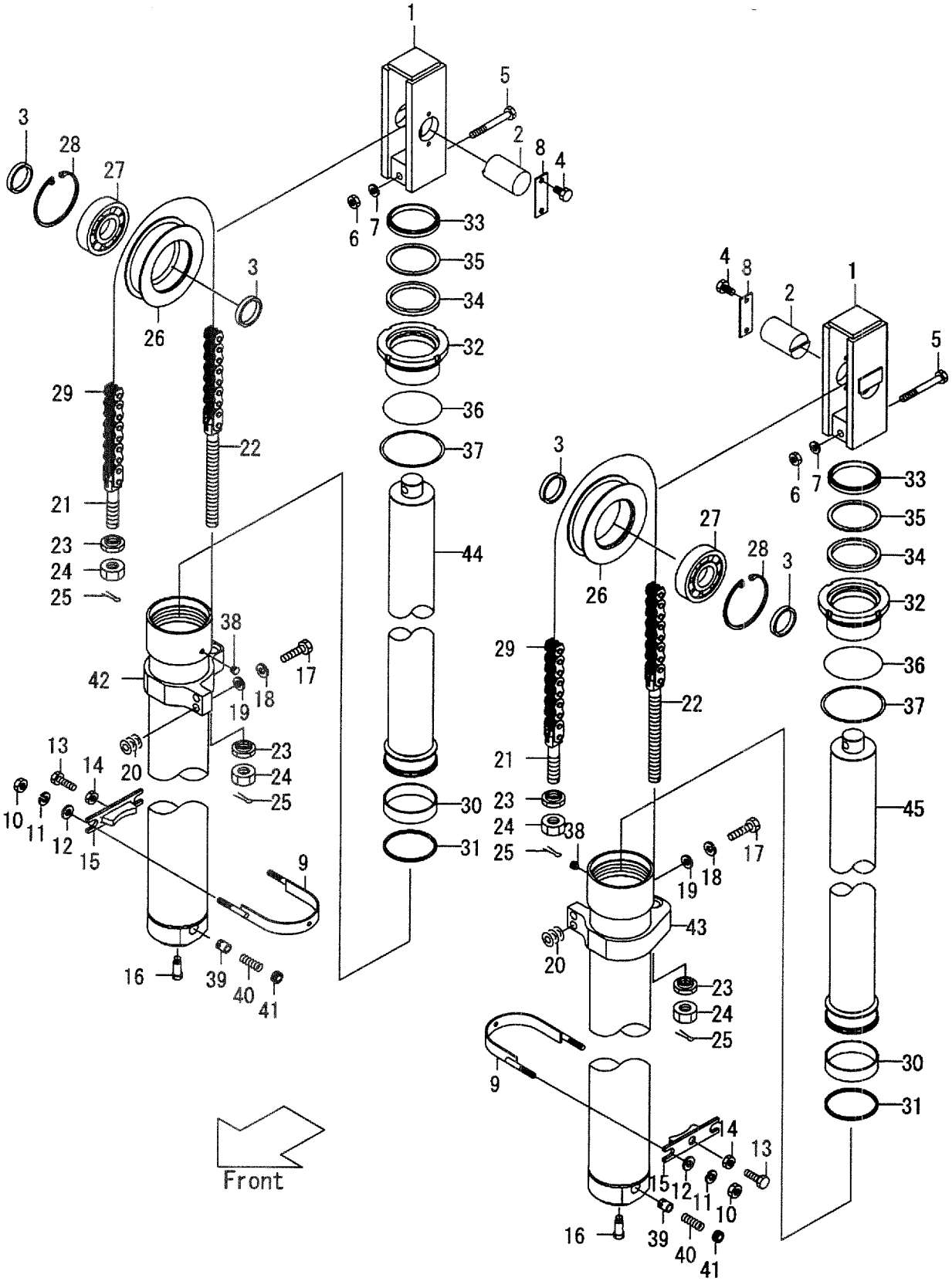

A:VFM24X(FD35,40,FG35,40)

Item No	Part No.	Mark	Description	Req'd	Remarks : Serial No.
-	224X0-50032		CYL-ASSY,LIFT,RH VFM350 ﾘﾌﾄｼﾘﾝﾀﾞｱｯｾﾝ	1	MAST NO.3- INC.30-45
-	224X0-50041		CYL-ASSY,LIFT,RH VFM366 ﾘﾌﾄｼﾘﾝﾀﾞｱｯｾﾝ	1	MAST NO.1-2 INC.30-45
-	224X0-50042		CYL-ASSY,LIFT,RH VFM366 ﾘﾌﾄｼﾘﾝﾀﾞｱｯｾﾝ	1	MAST NO.3- INC.30-45
-	224X0-50051		CYL-ASSY,LIFT,RH VFM370 ﾘﾌﾄｼﾘﾝﾀﾞｱｯｾﾝ	1	MAST NO.1-2 INC.30-45
-	224X0-50052		CYL-ASSY,LIFT,RH VFM370 ﾘﾌﾄｼﾘﾝﾀﾞｱｯｾﾝ	1	MAST NO.3- INC.30-45
-	224X0-50061		CYL-ASSY,LIFT,RH VFM375 ﾘﾌﾄｼﾘﾝﾀﾞｱｯｾﾝ	1	MAST NO.1-2 INC.30-45
-	224X0-50062		CYL-ASSY,LIFT,RH VFM375 ﾘﾌﾄｼﾘﾝﾀﾞｱｯｾﾝ	1	MAST NO.3- INC.30-45
-	224X0-50071		CYL-ASSY,LIFT,RH VFM400 ﾘﾌﾄｼﾘﾝﾀﾞｱｯｾﾝ	1	MAST NO.1-2 INC.30-45
-	224X0-50072		CYL-ASSY,LIFT,RH VFM400 ﾘﾌﾄｼﾘﾝﾀﾞｱｯｾﾝ	1	MAST NO.3- INC.30-45
A3	224X0-50101		CYL-ASSY,LIFT,LH VFM300 ﾘﾌﾄｼﾘﾝﾀﾞｱｯｾﾝ	1	MAST NO.1-2 INC.30-45
-	224X0-50102		CYL-ASSY,LIFT,LH VFM300 ﾘﾌﾄｼﾘﾝﾀﾞｱｯｾﾝ	1	MAST NO.3- INC.30-45
-	224X0-50111		CYL-ASSY,LIFT,LH VFM325 ﾘﾌﾄｼﾘﾝﾀﾞｱｯｾﾝ	1	MAST NO.1-2 INC.30-45
-	224X0-50112		CYL-ASSY,LIFT,LH VFM325 ﾘﾌﾄｼﾘﾝﾀﾞｱｯｾﾝ	1	MAST NO.3- INC.30-45
-	224X0-50121		CYL-ASSY,LIFT,LH VFM330 ﾘﾌﾄｼﾘﾝﾀﾞｱｯｾﾝ	1	MAST NO.1-2 INC.30-45
-	224X0-50122		CYL-ASSY,LIFT,LH VFM330 ﾘﾌﾄｼﾘﾝﾀﾞｱｯｾﾝ	1	MAST NO.3- INC.30-45
-	224X0-50131		CYL-ASSY,LIFT,LH VFM350 ﾘﾌﾄｼﾘﾝﾀﾞｱｯｾﾝ	1	MAST NO.1-2 INC.30-45
-	224X0-50132		CYL-ASSY,LIFT,LH VFM350 ﾘﾌﾄｼﾘﾝﾀﾞｱｯｾﾝ	1	MAST NO.3- INC.30-45
-	224X0-50141		CYL-ASSY,LIFT,LH VFM366 ﾘﾌﾄｼﾘﾝﾀﾞｱｯｾﾝ	1	MAST NO.1-2 INC.30-45
-	224X0-50142		CYL-ASSY,LIFT,LH VFM366 ﾘﾌﾄｼﾘﾝﾀﾞｱｯｾﾝ	1	MAST NO.3- INC.30-45
-	224X0-50151		CYL-ASSY,LIFT,LH VFM370 ﾘﾌﾄｼﾘﾝﾀﾞｱｯｾﾝ	1	MAST NO.1-2 INC.30-45
-	224X0-50152		CYL-ASSY,LIFT,LH VFM370 ﾘﾌﾄｼﾘﾝﾀﾞｱｯｾﾝ	1	MAST NO.3- INC.30-45
-	224X0-50161		CYL-ASSY,LIFT,LH VFM375 ﾘﾌﾄｼﾘﾝﾀﾞｱｯｾﾝ	1	MAST NO.1-2 INC.30-45
-	224X0-50162		CYL-ASSY,LIFT,LH VFM375 ﾘﾌﾄｼﾘﾝﾀﾞｱｯｾﾝ	1	MAST NO.3- INC.30-45
-	224X0-50171		CYL-ASSY,LIFT,LH VFM400 ﾘﾌﾄｼﾘﾝﾀﾞｱｯｾﾝ	1	MAST NO.1-2 INC.30-45
-	224X0-50172		CYL-ASSY,LIFT,LH VFM400 ﾘﾌﾄｼﾘﾝﾀﾞｱｯｾﾝ	1	MAST NO.3- INC.30-45

FIG.185 LIFT CYLINDER (FRONT)[VFM24X](4 CYLINDER)

(M40405A0) リフトシリンダ

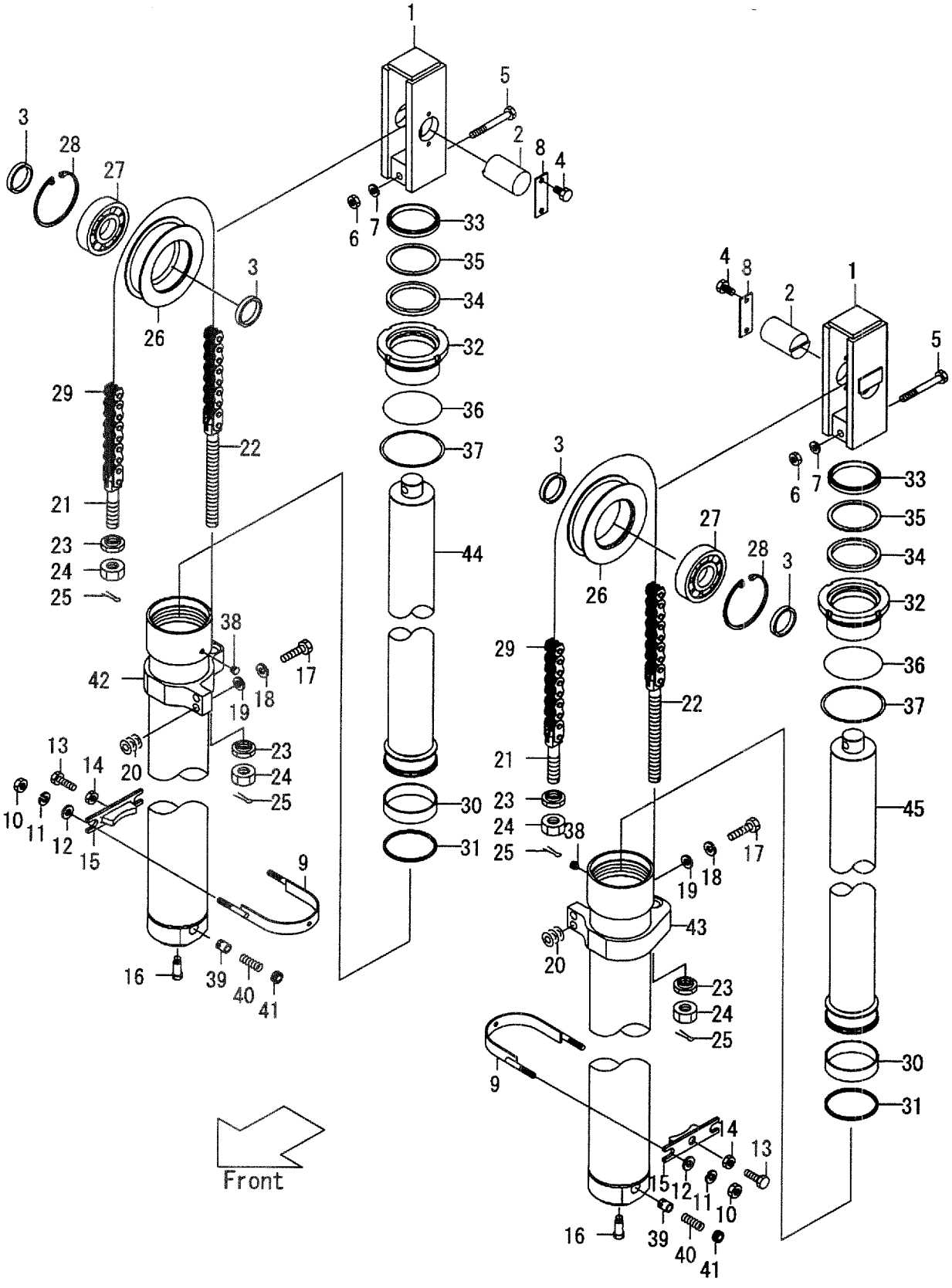

A:VFM24X(FD35,40,FG35,40)

Item No	Part No.	Mark	Description		Req'd	Remarks : Serial No.
30	23918-52131		WEARING	ｳｴｱﾘﾝｸﾞ	2	
31	54458-42011		RING,PISTON	ﾘﾝｸﾞ	2	
32	224X0-52101		CAP,CYL	ｷｬｯﾌﾟ	2	
33	24469-42721		SEAL,DUST	ｼｰﾙ	2	
34	24450-82241		PACKING	ﾊﾟｯｷﾝｸﾞ	2	
35	24450-82251		RING,BACK-UP	ﾘﾝｸﾞ	2	
36	03350-01100		O-RING	Oﾘﾝｸﾞ	2	
37	03370-01100		RING,BACK-UP	ﾘﾝｸﾞ	2	
38	23870-52871		PLUG	ﾌﾟﾗｸﾞ	2	
39	24320-55001		PISTON	ﾋﾟｽﾄﾝ	2	
40	24230-52701		SPRING	ｽﾌﾟﾘﾝｸﾞ	2	
41	24230-82071		RETAINER	ﾘﾃｰﾅ	2	
42	224X0-50201		TUBE,RH VFM300	ﾁｭｰﾌﾞ	1	MAST NO.1-2
-	224X0-50202		TUBE,RH VFM300	ﾁｭｰﾌﾞ	1	MAST NO.3-
-	224X0-50211		TUBE,RH VFM325	ﾁｭｰﾌﾞ	1	MAST NO.1-2
-	224X0-50212		TUBE,RH VFM325	ﾁｭｰﾌﾞ	1	MAST NO.3-
-	224X0-50221		TUBE,RH VFM330	ﾁｭｰﾌﾞ	1	MAST NO.1-2
-	224X0-50222		TUBE,RH VFM330	ﾁｭｰﾌﾞ	1	MAST NO.3-
-	224X0-50231		TUBE,RH VFM350	ﾁｭｰﾌﾞ	1	MAST NO.1-2
-	224X0-50232		TUBE,RH VFM350	ﾁｭｰﾌﾞ	1	MAST NO.3-
-	224X0-50241		TUBE,RH VFM366	ﾁｭｰﾌﾞ	1	MAST NO.1-2
-	224X0-50242		TUBE,RH VFM366	ﾁｭｰﾌﾞ	1	MAST NO.3-
-	224X0-50251		TUBE,RH VFM370	ﾁｭｰﾌﾞ	1	MAST NO.1-2
-	224X0-50252		TUBE,RH VFM370	ﾁｭｰﾌﾞ	1	MAST NO.3-
-	224X0-50261		TUBE,RH VFM375	ﾁｭｰﾌﾞ	1	MAST NO.1-2
-	224X0-50262		TUBE,RH VFM375	ﾁｭｰﾌﾞ	1	MAST NO.3-
-	224X0-50271		TUBE,RH VFM400	ﾁｭｰﾌﾞ	1	MAST NO.1-2
-	224X0-50272		TUBE,RH VFM400	ﾁｭｰﾌﾞ	1	MAST NO.3-
43	224X0-50401		TUBE,LH VFM300	ﾁｭｰﾌﾞ	1	MAST NO.1-2
-	224X0-50402		TUBE,LH VFM300	ﾁｭｰﾌﾞ	1	MAST NO.3-
-	224X0-50411		TUBE,LH VFM325	ﾁｭｰﾌﾞ	1	MAST NO.1-2
-	224X0-50412		TUBE,LH VFM325	ﾁｭｰﾌﾞ	1	MAST NO.3-
-	224X0-50421		TUBE,LH VFM330	ﾁｭｰﾌﾞ	1	MAST NO.1-2
-	224X0-50422		TUBE,LH VFM330	ﾁｭｰﾌﾞ	1	MAST NO.3-
-	224X0-50431		TUBE,LH VFM350	ﾁｭｰﾌﾞ	1	MAST NO.1-2
-	224X0-50432		TUBE,LH VFM350	ﾁｭｰﾌﾞ	1	MAST NO.3-
-	224X0-50441		TUBE,LH VFM366	ﾁｭｰﾌﾞ	1	MAST NO.1-2
-	224X0-50442		TUBE,LH VFM366	ﾁｭｰﾌﾞ	1	MAST NO.3-
-	224X0-50451		TUBE,LH VFM370	ﾁｭｰﾌﾞ	1	MAST NO.1-2
-	224X0-50452		TUBE,LH VFM370	ﾁｭｰﾌﾞ	1	MAST NO.3-
-	224X0-50461		TUBE,LH VFM375	ﾁｭｰﾌﾞ	1	MAST NO.1-2
-	224X0-50462		TUBE,LH VFM375	ﾁｭｰﾌﾞ	1	MAST NO.3-
-	224X0-50471		TUBE,LH VFM400	ﾁｭｰﾌﾞ	1	MAST NO.1-2
-	224X0-50472		TUBE,LH VFM400	ﾁｭｰﾌﾞ	1	MAST NO.3-
44	224X0-50601		ROD,PISTON,RH VFM300	ﾛｯﾄﾞ	1	
-	224X0-50611		ROD,PISTON,RH VFM325	ﾛｯﾄﾞ	1	
-	224X0-50621		ROD,PISTON,RH VFM330	ﾛｯﾄﾞ	1	
-	224X0-50631		ROD,PISTON,RH VFM350	ﾛｯﾄﾞ	1	
-	224X0-50641		ROD,PISTON,RH VFM366	ﾛｯﾄﾞ	1	
-	224X0-50651		ROD,PISTON,RH VFM370	ﾛｯﾄﾞ	1	

FIG.185 LIFT CYLINDER (FRONT)[VFM24X](4 CYLINDER)

(M40405A0) リフトシリンダ

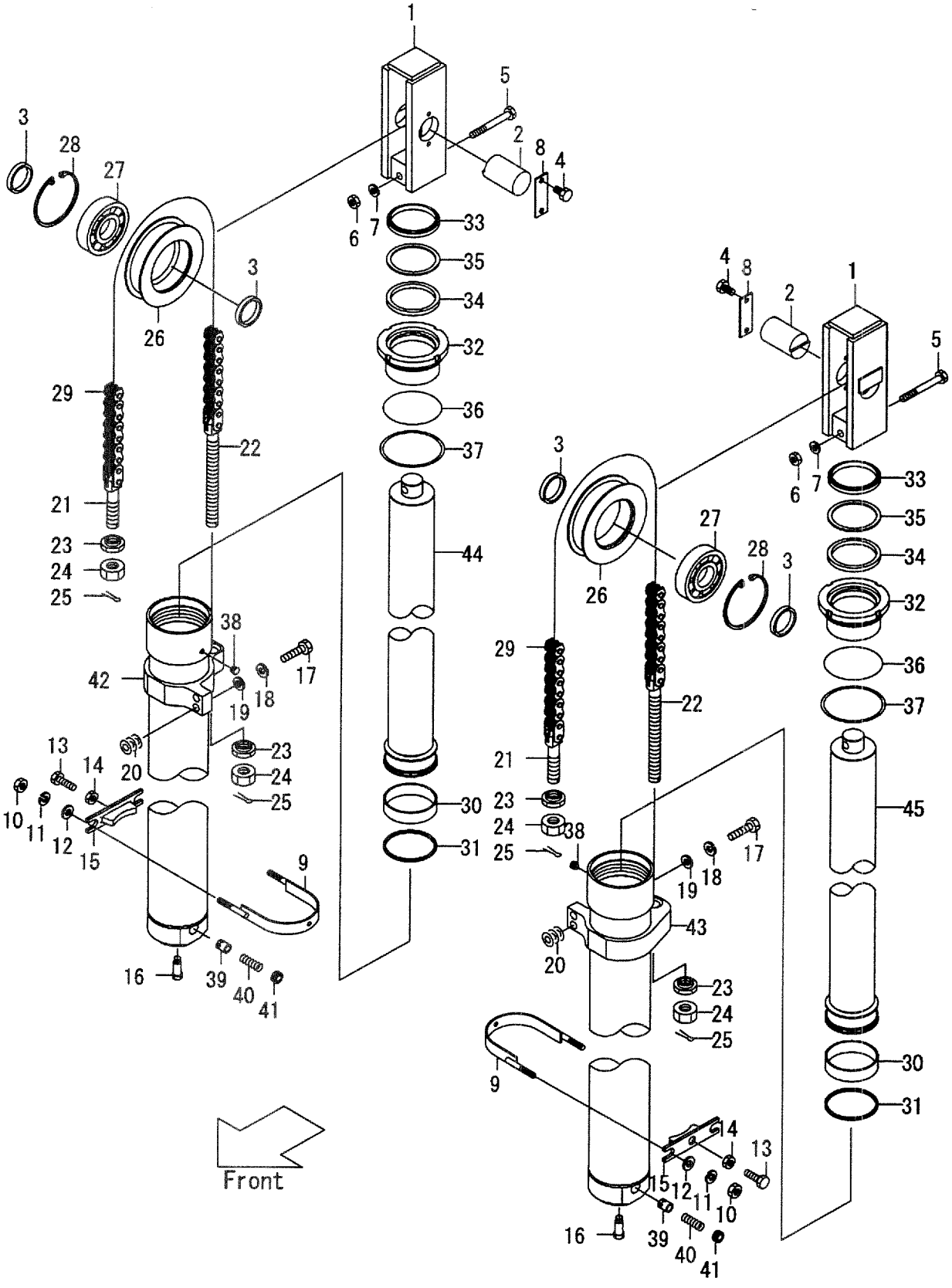

A:VFM24X(FD35,40,FG35,40)

Item No	Part No.	Mark	Description	Req'd	Remarks : Serial No.
-	224X0-50661		ROD,PISTON,RH VFM375 ﾛｯﾄ゛	1	
-	224X0-50671		ROD,PISTON,RH VFM400 ﾛｯﾄ゛	1	
45	224X0-50601		ROD,PISTON,LH VFM300 ﾛｯﾄ゛	1	
-	224X0-50611		ROD,PISTON,LH VFM325 ﾛｯﾄ゛	1	
-	224X0-50621		ROD,PISTON,LH VFM330 ﾛｯﾄ゛	1	
-	224X0-50631		ROD,PISTON,LH VFM350 ﾛｯﾄ゛	1	
-	224X0-50641		ROD,PISTON,LH VFM366 ﾛｯﾄ゛	1	
-	224X0-50651		ROD,PISTON,LH VFM370 ﾛｯﾄ゛	1	
-	224X0-50661		ROD,PISTON,LH VFM375 ﾛｯﾄ゛	1	
-	224X0-50671		ROD,PISTON,LH VFM400 ﾛｯﾄ゛	1	

FIG.186 LIFT CYLINDER (REAR)[VFM24X](4 CYLINDER)

(M40405C0) リフトシリンダ

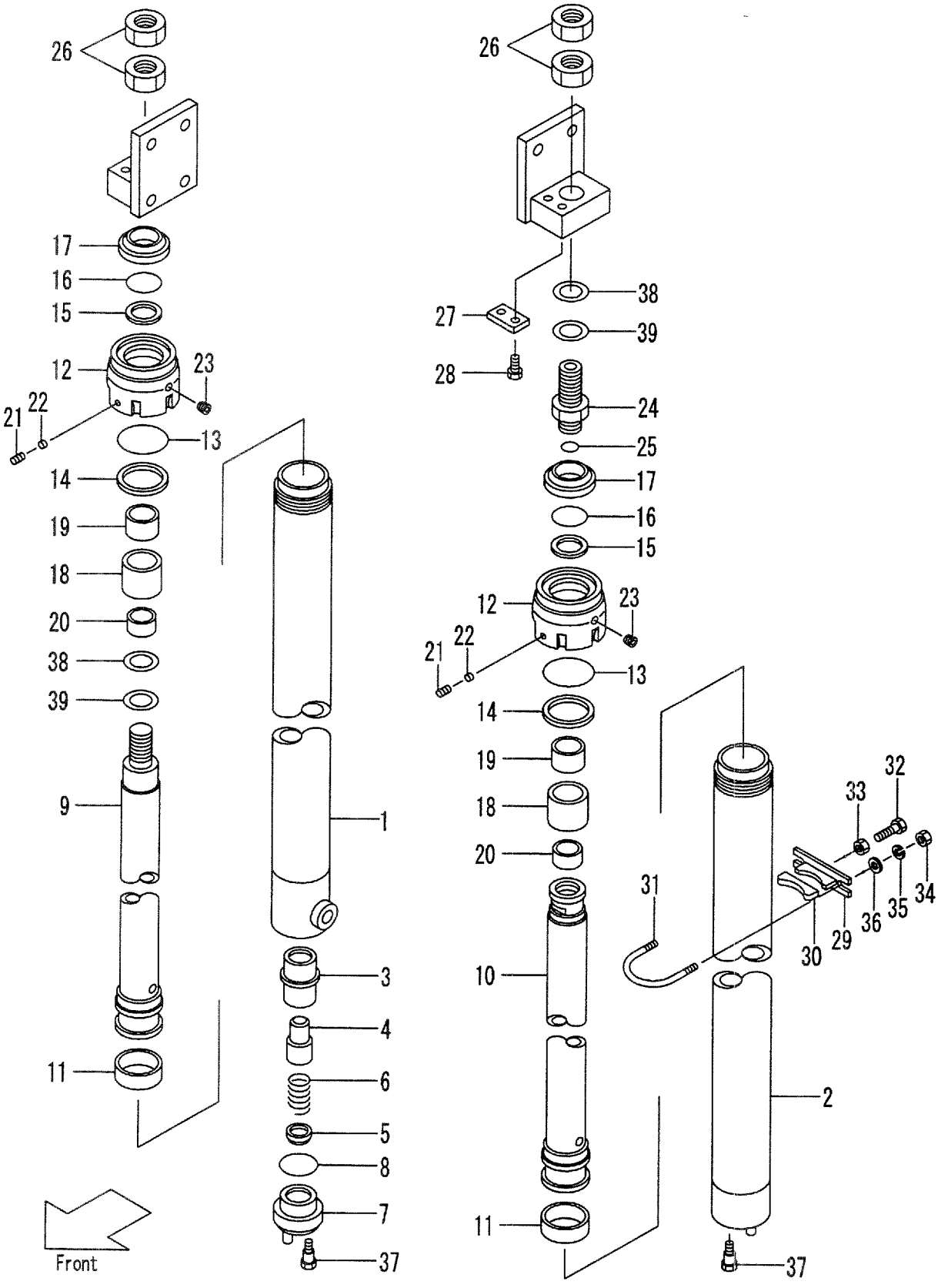

A:VFM24X(FD35,40,FG35,40)

Item No	Part No.	Mark	Description	Req'd	Remarks : Serial No.
A1	228C0-50601		CYL-ASSY,LIFT,RH VFM300 ﾘﾌﾄｼﾘﾝﾀﾞｱｯｾﾝ	1	INC.1-23
-	228C0-50641		CYL-ASSY,LIFT,RH VFM325 ﾘﾌﾄｼﾘﾝﾀﾞｱｯｾﾝ	1	INC.1-23
-	228C0-50651		CYL-ASSY,LIFT,RH VFM330 ﾘﾌﾄｼﾘﾝﾀﾞｱｯｾﾝ	1	INC.1-23
-	228C0-50661		CYL-ASSY,LIFT,RH VFM350 ﾘﾌﾄｼﾘﾝﾀﾞｱｯｾﾝ	1	INC.1-23
-	228C0-50671		CYL-ASSY,LIFT,RH VFM366 ﾘﾌﾄｼﾘﾝﾀﾞｱｯｾﾝ	1	INC.1-23
-	228C0-50681		CYL-ASSY,LIFT,RH VFM370 ﾘﾌﾄｼﾘﾝﾀﾞｱｯｾﾝ	1	INC.1-23
-	228C0-50691		CYL-ASSY,LIFT,RH VFM375 ﾘﾌﾄｼﾘﾝﾀﾞｱｯｾﾝ	1	INC.1-23
-	228C0-50701		CYL-ASSY,LIFT,RH VFM400 ﾘﾌﾄｼﾘﾝﾀﾞｱｯｾﾝ	1	INC.1-23
A2	224X0-51001		CYL-ASSY,LIFT,LH VFM300 ﾘﾌﾄｼﾘﾝﾀﾞｱｯｾﾝ	1	INC.2-25
-	224X0-51011		CYL-ASSY,LIFT,LH VFM325 ﾘﾌﾄｼﾘﾝﾀﾞｱｯｾﾝ		INC.2-25
-	224X0-51021		CYL-ASSY,LIFT,LH VFM330 ﾘﾌﾄｼﾘﾝﾀﾞｱｯｾﾝ	1	INC.2-25
-	224X0-51031		CYL-ASSY,LIFT,LH VFM350 ﾘﾌﾄｼﾘﾝﾀﾞｱｯｾﾝ	1	INC.2-25
-	224X0-51041		CYL-ASSY,LIFT,LH VFM366 ﾘﾌﾄｼﾘﾝﾀﾞｱｯｾﾝ	1	INC.2-25
-	224X0-51051		CYL-ASSY,LIFT,LH VFM370 ﾘﾌﾄｼﾘﾝﾀﾞｱｯｾﾝ	1	INC.2-25
-	224X0-51061		CYL-ASSY,LIFT,LH VFM375 ﾘﾌﾄｼﾘﾝﾀﾞｱｯｾﾝ	1	INC.2-25
-	224X0-51071		CYL-ASSY,LIFT,LH VFM400 ﾘﾌﾄｼﾘﾝﾀﾞｱｯｾﾝ	1	INC.2-25
1	228C0-51001		TUBE,RH VFM300 ﾁｭｰﾌﾞ	1	
-	228C0-51041		TUBE,RH VFM325 ﾁｭｰﾌﾞ	1	
-	228C0-51051		TUBE,RH VFM330 ﾁｭｰﾌﾞ	1	
-	228C0-51061		TUBE,RH VFM350 ﾁｭｰﾌﾞ	1	
-	228C0-51071		TUBE,RH VFM366 ﾁｭｰﾌﾞ	1	
-	228C0-51081		TUBE,RH VFM370 ﾁｭｰﾌﾞ	1	
-	228C0-51091		TUBE,RH VFM375 ﾁｭｰﾌﾞ	1	
-	228C0-51101		TUBE,RH VFM400 ﾁｭｰﾌﾞ	1	
2	224X0-51201		TUBE,LH VFM300 ﾁｭｰﾌﾞ	1	
-	224X0-51211		TUBE,LH VFM325 ﾁｭｰﾌﾞ	1	
-	224X0-51221		TUBE,LH VFM330 ﾁｭｰﾌﾞ	1	
-	224X0-51231		TUBE,LH VFM350 ﾁｭｰﾌﾞ	1	
-	224X0-51241		TUBE,LH VFM366 ﾁｭｰﾌﾞ	1	
-	224X0-51251		TUBE,LH VFM370 ﾁｭｰﾌﾞ	1	
-	224X0-51261		TUBE,LH VFM375 ﾁｭｰﾌﾞ	1	
-	224X0-51271		TUBE,LH VFM400 ﾁｭｰﾌﾞ	1	
3	53658-43021		SLEEVE ｽﾘｰﾌﾞ	1	(RH)
4	53658-43011		PISTON ﾋﾟｽﾄﾝ	1	(RH)
5	53658-43001		CHECK ﾁｪｯｸ	1	(RH)
6	53658-43031		SPRING ｽﾌﾟﾘﾝｸﾞ	1	(RH)
7	54238-43051		PLUG ﾌﾟﾗｸﾞ	1	(RH)
8	03320-00340		O-RING Oﾘﾝｸﾞ	1	(RH)
9	228C0-51401		ROD,PISTON,RH VFM300 ﾛｯﾄﾞ	1	
-	228C0-51441		ROD,PISTON,RH VFM325 ﾛｯﾄﾞ	1	
-	228C0-51451		ROD,PISTON,RH VFM330 ﾛｯﾄﾞ	1	
-	228C0-51461		ROD,PISTON,RH VFM350 ﾛｯﾄﾞ	1	
-	228C0-51471		ROD,PISTON,RH VFM366 ﾛｯﾄﾞ	1	
-	228C0-51481		ROD,PISTON,RH VFM370 ﾛｯﾄﾞ	1	
-	228C0-51491		ROD,PISTON,RH VFM375 ﾛｯﾄﾞ	1	
-	228C0-51501		ROD,PISTON,RH VFM400 ﾛｯﾄﾞ	1	
10	228C0-51601		ROD,PISTON,LH VFM300 ﾛｯﾄﾞ	1	
-	228C0-51641		ROD,PISTON,LH VFM325 ﾛｯﾄﾞ	1	
-	228C0-51651		ROD,PISTON,LH VFM330 ﾛｯﾄﾞ	1	
-	228C0-51661		ROD,PISTON,LH VFM350 ﾛｯﾄﾞ	1	

FIG.186 LIFT CYLINDER (REAR)[VFM24X](4 CYLINDER)

(M40405C0) リフトシリンダ

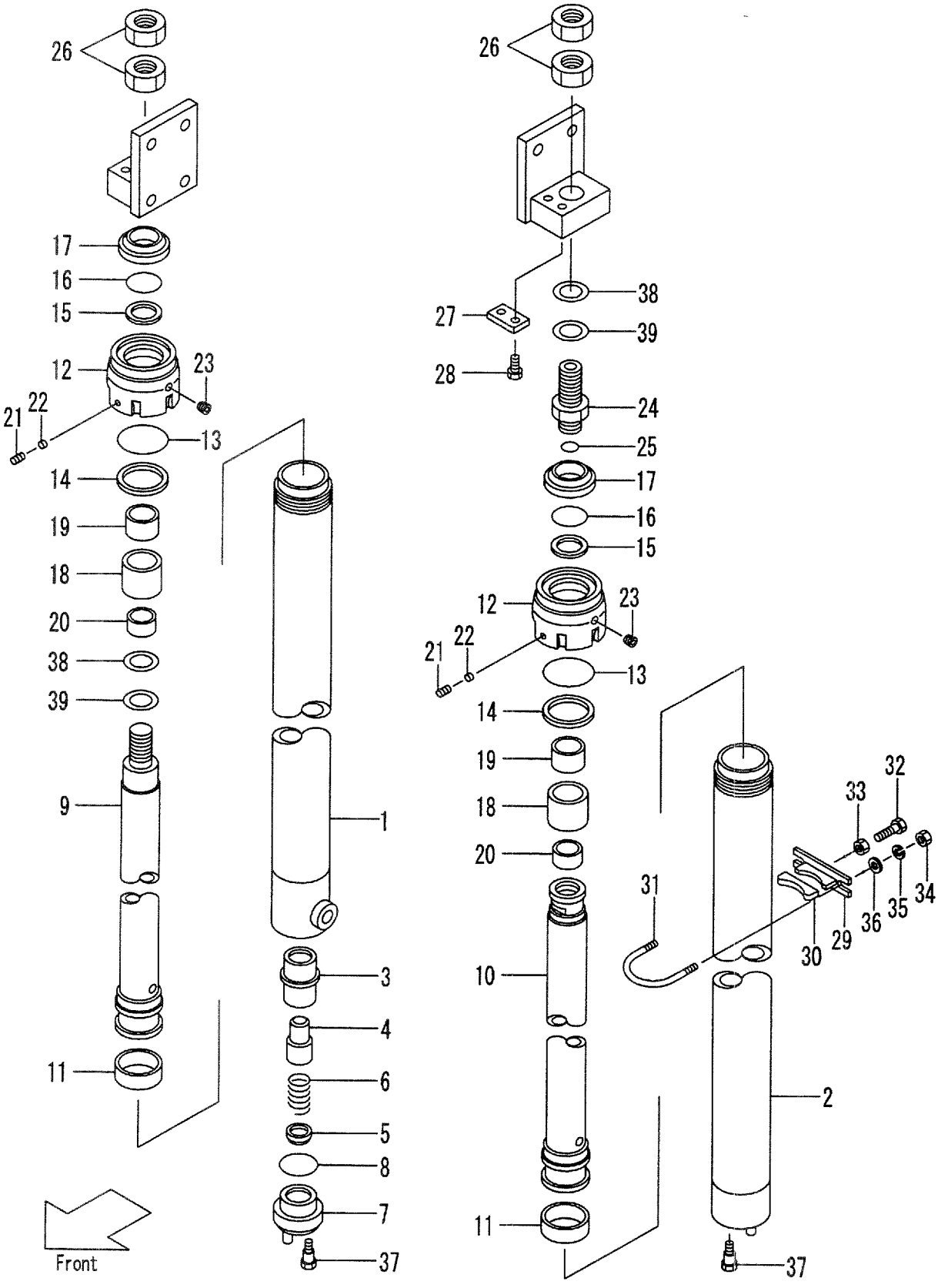

A:VFM24X(FD35,40,FG35,40)

Item No	Part No.	Mark	Description		Req'd	Remarks : Serial No.
-	228C0-51671		ROD,PISTON,LH VFM366	ﾛｯﾄﾞ	1	
-	228C0-51681		ROD,PISTON,LH VFM370	ﾛｯﾄﾞ	1	
-	228C0-51691		ROD,PISTON,LH VFM375	ﾛｯﾄﾞ	1	
-	228C0-51701		ROD,PISTON,LH VFM400	ﾛｯﾄﾞ	1	
11	23460-53181		WEARING	ｳｴｱﾘﾝｸﾞ	2	
12	228C0-53011		CAP	ｷｬｯﾌﾟ	2	
13	03350-00650		O-RING	Oﾘﾝｸﾞ	2	
14	22658-52301		RING,BACK-UP	ﾘﾝｸﾞ	2	
15	97103-35431		PACKING	ﾊﾟｯｷﾝｸﾞ	2	
16	228C0-53021		RING,BACK-UP	ﾘﾝｸﾞ	2	
17	224T8-46001		SEAL,DUST	ｼｰﾙ	2	
A3	228C0-53301		SLEEVE-ASSY	ｽﾘｰﾌﾞｱｯｾﾝ	2	INC.18,19
18	228C0-53311		SLEEVE	ｽﾘｰﾌﾞ	2	
19	23460-53171		BUSHING	ﾌﾞｯｼﾝｸﾞ	2	
20	228C0-53401		SPACER VFM400	ｽﾍﾟｰｻ	2	
21	25908-44101		PLUG	ﾌﾟﾗｸﾞ	2	
22	25908-44111		PLUG,NYLON	ﾌﾟﾗｸﾞ	2	
23	23870-52871		PLUG	ﾌﾟﾗｸﾞ	4	
24	224T0-53301		NIPPLE	ﾆｯﾌﾟﾙ	1	(LH)
25	03320-00240		O-RING	Oﾘﾝｸﾞ	1	(LH)
26	224T0-53311		NUT	ﾅｯﾄ	4	
27	23648-50161		PLATE	ﾌﾟﾚｰﾄ	1	(LH)
28	01184-10020		BOLT	ﾎﾞﾙﾄ	2	(LH)
29	224T8-42711		SUPPORT	ｻﾎﾟｰﾄ	2	
30	214A8-42631		RUBBER	ﾗﾊﾞｰ	2	
31	224T8-42701		U-BOLT	Uﾎﾞﾙﾄ	2	
32	01120-16045		BOLT	ﾎﾞﾙﾄ	2	
-	01120-16040		BOLT	ﾎﾞﾙﾄ	2	
33	01402-00016		NUT	ﾅｯﾄ	2	
34	01400-00010		NUT	ﾅｯﾄ	4	
35	02010-00010		WASHER	ﾜｯｼｬ	4	
36	02000-00010		WASHER	ﾜｯｼｬ	4	
37	214A0-82831		BOLT	ﾎﾞﾙﾄ	2	
38	211F8-22261		SHIM,T-0.5	ｼﾑ	5	
39	211F8-22271		SHIM,T-1.0	ｼﾑ	5	

FIG.187 MAST PIPING [VFM24X](4 CYLINDER)

(M40405E0) マストパイピング

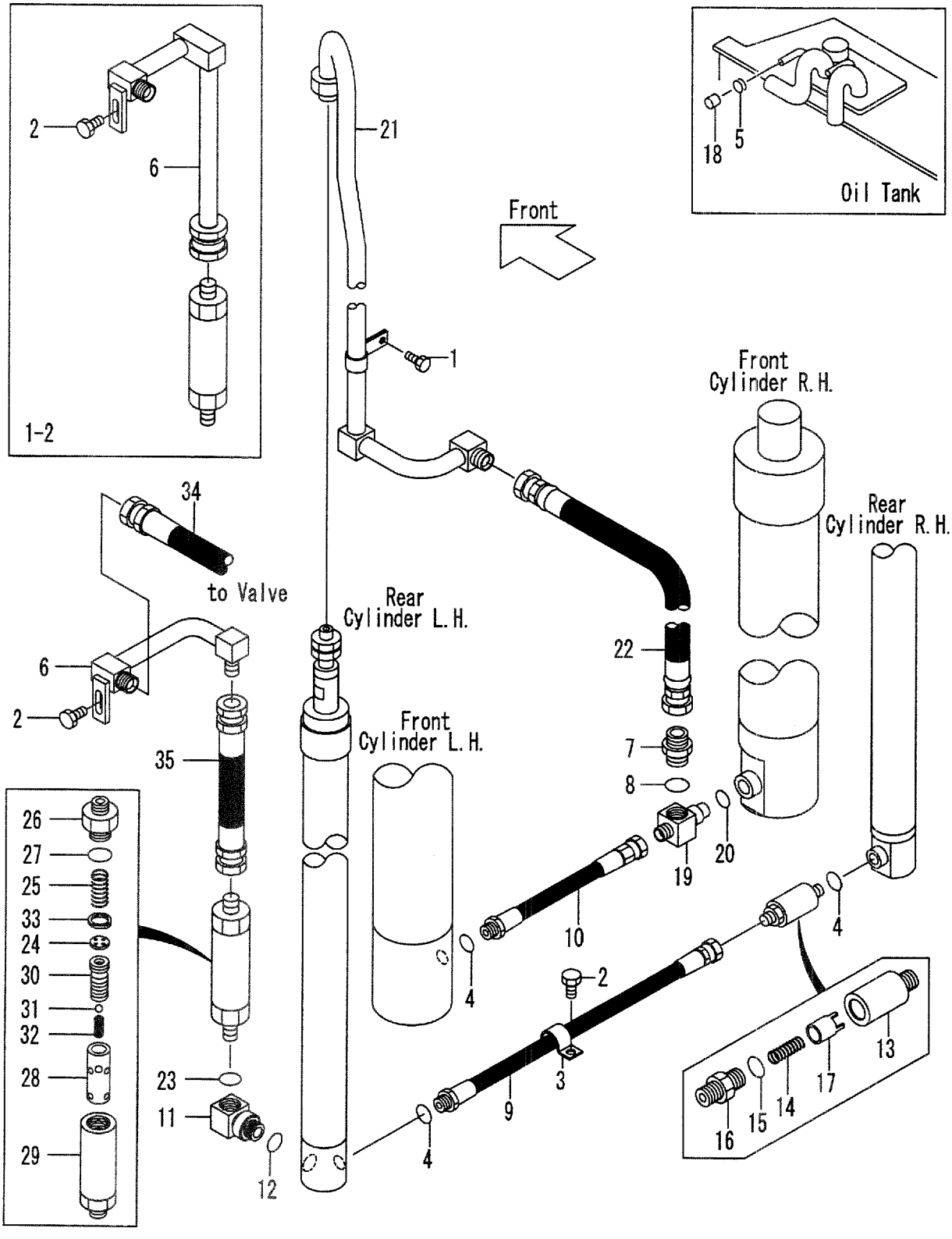

A:VFM24X(FD35,40,FG35,40)

Item No	Part No.	Mark	Description		Req'd	Remarks : Serial No.
1	01184-08020		BOLT & WASHER	ﾎﾞﾙﾄ&ﾜｯｼｬ	1	
2	01184-10020		BOLT & WASHER	ﾎﾞﾙﾄ&ﾜｯｼｬ	2	
3	214A8-43081		CLIP	ｸﾘｯﾌﾟ	1	
4	03320-00180		O-RING	Oﾘﾝｸﾞ	3	
5	04911-00032		CLIP	ｸﾘｯﾌﾟ	1	
6	224X0-62781		PIPE	ﾊﾟｲﾌﾟ	1	MAST NO.1-2
-	224X0-62782		PIPE	ﾊﾟｲﾌﾟ	1	MAST NO.3-
7	04134-00606		NIPPLE	ﾆｯﾌﾟﾙ	1	
8	03320-00240		O-RING	Oﾘﾝｸﾞ	1	
9	224X0-62881		HOSE	ﾎｰｽ	1	MAST NO.1-2
-	224X0-62882		HOSE	ﾎｰｽ	1	MAST NO.3-
10	224X0-62871		HOSE	ﾎｰｽ	1	MAST NO.1-2
-	224X0-62872		HOSE	ﾎｰｽ	1	MAST NO.3-
A1	224X0-62891		ELBOW-ASSY	ｴﾙﾎﾞｱｯｾﾝ	1	INC.11,12
11	NO PART NO.	#	ELBOW	ｴﾙﾎﾞ	1	
12	03320-00240		O-RING	Oﾘﾝｸﾞ	1	
A2	24320-60601		VALVE-ASSY,CUT	ｶｯﾄﾊﾞﾙﾌﾞｱｯｾﾝ	1	INC.13-17
13	23670-62301		CASE	ｹｰｽ	1	
14	24230-52701		SPRING	ｽﾌﾟﾘﾝｸﾞ	1	
A3	24320-58581		NIPPLE-ASSY	ﾆｯﾌﾟﾙｱｯｾﾝ	1	INC.15,16
15	03320-00180		O-RING	Oﾘﾝｸﾞ	1	
16	NO PART NO.	#	NIPPLE	ﾆｯﾌﾟﾙ	1	
17	24320-63601		PISTON	ﾋﾟｽﾄﾝ	1	
18	24356-13011		CAP	ｷｬｯﾌﾟ	1	
A4	24609-43682		THREE-WAY ASSY	ｽﾘｰｳｪｲｱｯｾﾝ	1	INC.19,20
19	NO PART NO.	#	THREE-WAY	ｽﾘｰｳｴｲ	1	
20	03320-00180		O-RING	Oﾘﾝｸﾞ	1	
21	224X0-62501		PIPE VFM300	ﾊﾟｲﾌﾟ	1	
-	224X0-62511		PIPE VFM325	ﾊﾟｲﾌﾟ	1	
-	224X0-62511		PIPE VFM330	ﾊﾟｲﾌﾟ	1	
-	224X0-62531		PIPE VFM350	ﾊﾟｲﾌﾟ	1	
-	224X0-62541		PIPE VFM366	ﾊﾟｲﾌﾟ	1	
-	224X0-62551		PIPE VFM370	ﾊﾟｲﾌﾟ	1	
-	224X0-62561		PIPE VFM375	ﾊﾟｲﾌﾟ	1	
-	224X0-62571		PIPE VFM400	ﾊﾟｲﾌﾟ	1	
22	224X0-62731		HOSE VFM300	ﾎｰｽ	1	
-	224X0-62741		HOSE VFM325	ﾎｰｽ	1	
-	224X0-62751		HOSE VFM330	ﾎｰｽ	1	
-	224X0-62761		HOSE VFM350	ﾎｰｽ	1	
-	224X0-62771		HOSE VFM366	ﾎｰｽ	1	
-	224X0-62771		HOSE VFM370	ﾎｰｽ	1	
-	224X0-62771		HOSE VFM375	ﾎｰｽ	1	
-	224X0-62771		HOSE VFM400	ﾎｰｽ	1	
23	03320-00240		O-RING	Oﾘﾝｸﾞ	1	
A5	228C8-41002		REGULATOR-ASSY,FLOW	ﾚｷﾞｭﾚｰﾀｱｯｾﾝ	1	INC.24-33
24	24329-45561		PLATE,ORIFICE	ﾌﾟﾚｰﾄ	1	
25	24609-43631		SPRING	ｽﾌﾟﾘﾝｸﾞ	2	
26	25908-44461		NIPPLE	ﾆｯﾌﾟﾙ	1	
27	03320-00360		O-RING	Oﾘﾝｸﾞ	1	
28	224T8-43011		SLEEVE	ｽﾘｰﾌﾞ	1	

FIG.187 MAST PIPING [VFM24X](4 CYLINDER)

(M40405E0) マストパイピング

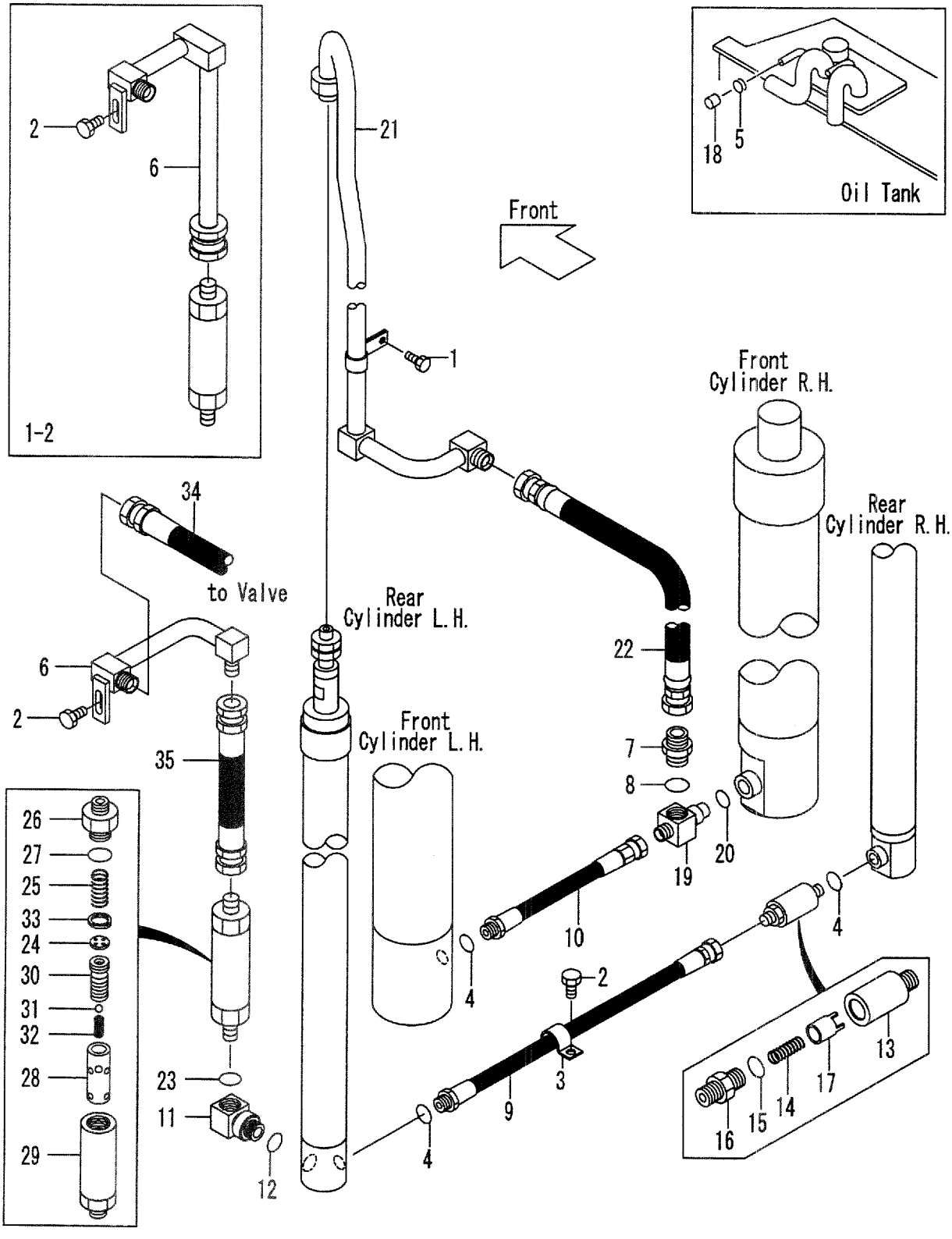

A:VFM24X(FD35,40,FG35,40)

Item No	Part No.	Mark	Description		Req'd	Remarks : Serial No.
29	224T8-43001		CASE	ケース	1	
30	24609-43671		PISTON	ピストン	1	
31	24459-42951		NYLON,BALL	ボール	1	
32	214A8-44151		SPRING	スプリング	1	
33	02110-00020		RING,SNAP	スナップリング	1	
34	224X0-62851		HOSE,HP	ホース	1	
35	224X0-62921		HOSE	ホース	1	MAST NO.3-

FIG.188 FORK & LIFT BRACKET [VFM28C](3CYLINDER)

(M4040620) フォーク&リフトブラケット

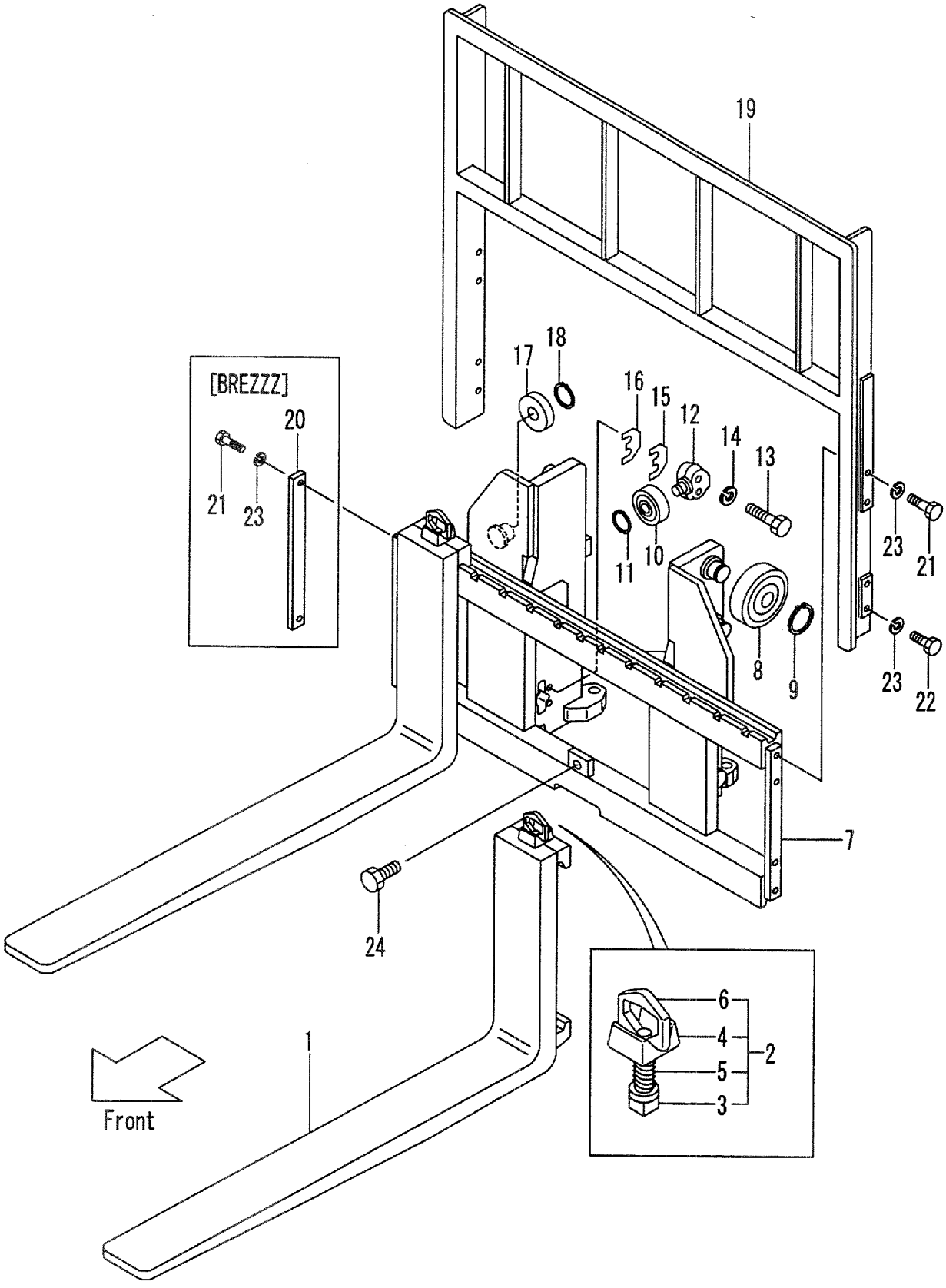

A:VFM28C(FD45,FG45)

Item No	Part No.	Mark	Description		Req'd	Remarks : Serial No.
1	228A8-10613		FORK	ﾌｫｰｸ	2	MAST NO.1-96 (L=1070) INC.3-6
-	228A8-10614		FORK	ﾌｫｰｸ	2	MAST NO.97- (L=1070) INC.3-6
-	228A8-10603		FORK	ﾌｫｰｸ	2	MAST NO.1-96 [LF100] INC.3-6
-	228A8-10604		FORK	ﾌｫｰｸ	2	MAST NO.97- [LF100] INC.3-6
-	228A8-10613		FORK	ﾌｫｰｸ	2	MAST NO.1-96 [LF107] INC.3-6
-	228A8-10614		FORK	ﾌｫｰｸ	2	MAST NO.97- [LF107] INC.3-6
-	228A8-10623		FORK	ﾌｫｰｸ	2	MAST NO.1-96 [LF110] INC.3-6
-	228A8-10624		FORK	ﾌｫｰｸ	2	MAST NO.97- [LF110] INC.3-6
-	228A8-10633		FORK	ﾌｫｰｸ	2	MAST NO.1-96 [LF120] INC.3-6
-	228A8-10634		FORK	ﾌｫｰｸ	2	MAST NO.97- [LF120] INC.3-6
-	228A8-10643		FORK	ﾌｫｰｸ	2	MAST NO.1-96 [LF122] INC.3-6
-	228A8-10644		FORK	ﾌｫｰｸ	2	MAST NO.97- [LF122] INC.3-6
-	228A8-10743		FORK	ﾌｫｰｸ	2	MAST NO.1-96 [LF130] INC.3-6
-	228A8-10744		FORK	ﾌｫｰｸ	2	MAST NO.97- [LF130] INC.3-6
-	228A8-10653		FORK	ﾌｫｰｸ	2	MAST NO.1-96 [LF137] INC.3-6
-	228A8-10654		FORK	ﾌｫｰｸ	2	MAST NO.97- [LF137] INC.3-6
-	228A8-10753		FORK	ﾌｫｰｸ	2	MAST NO.1-96 [LF140] INC.3-6
-	228A8-10754		FORK	ﾌｫｰｸ	2	MAST NO.97- [LF140] INC.3-6
-	228A8-10763		FORK	ﾌｫｰｸ	2	MAST NO.1-96 [LF150] INC.3-6
-	228A8-10764		FORK	ﾌｫｰｸ	2	MAST NO.97- [LF150] INC.3-6
-	228A8-10663		FORK	ﾌｫｰｸ	2	MAST NO.1-96 [LF152] INC.3-6
-	228A8-10664		FORK	ﾌｫｰｸ	2	MAST NO.97- [LF152] INC.3-6
-	228A8-10773		FORK	ﾌｫｰｸ	2	MAST NO.1-96 [LF160] INC.3-6
-	228A8-10774		FORK	ﾌｫｰｸ	2	MAST NO.97- [LF160] INC.3-6
-	228A8-10673		FORK	ﾌｫｰｸ	2	MAST NO.1-96 [LF167] INC.3-6

FIG.188 FORK & LIFT BRACKET [VFM28C](3CYLINDER)

(M4040620) フォーク&リフトブラケット

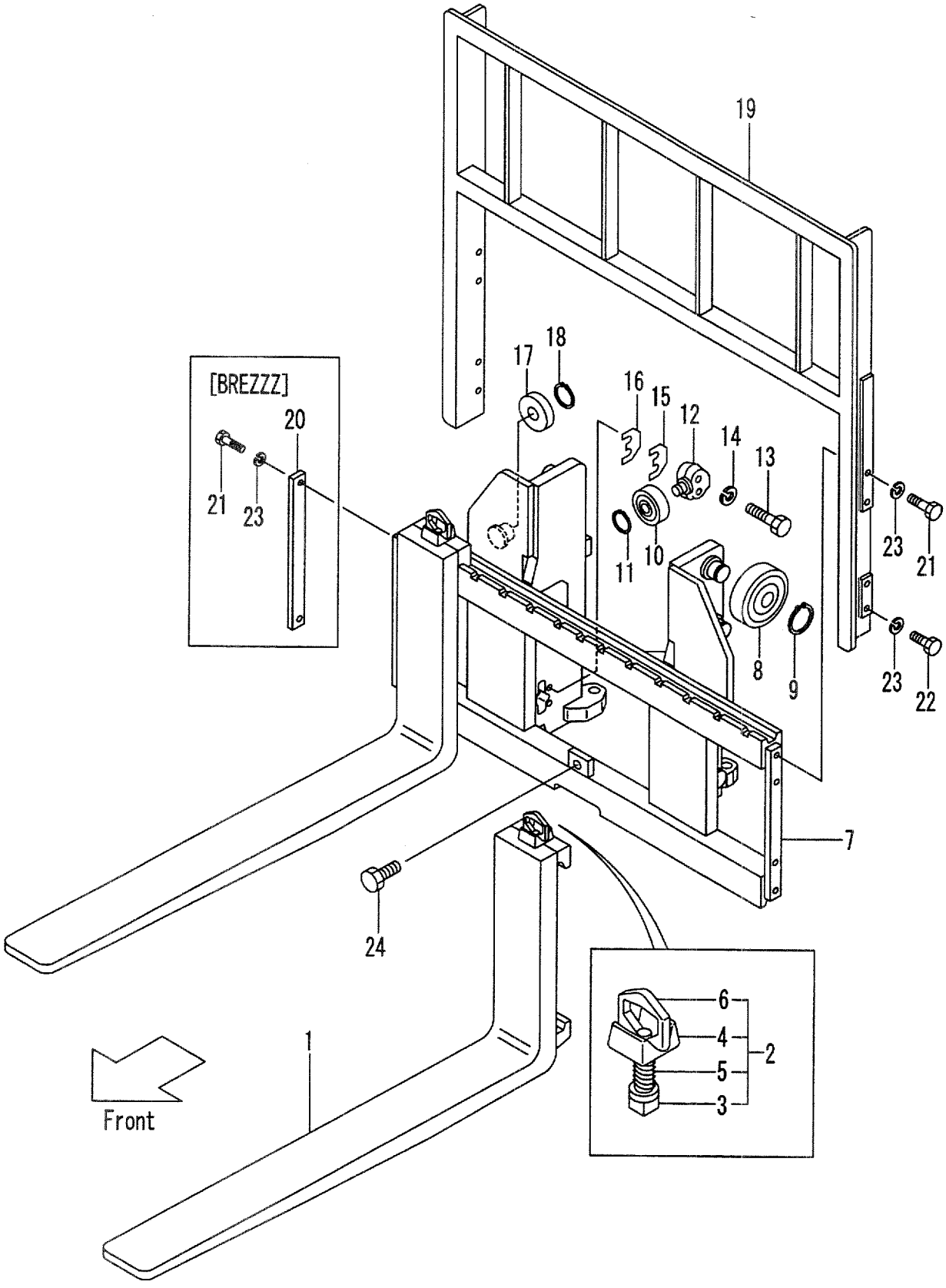

A:VFM28C(FD45,FG45)

Item No	Part No.	Mark	Description		Req'd	Remarks : Serial No.
-	228A8-10674		FORK	ﾌｫｰｸ	2	MAST NO.97- [LF167] INC.3-6
-	228A8-10783		FORK	ﾌｫｰｸ	2	MAST NO.1-96 [LF170] INC.3-6
-	228A8-10784		FORK	ﾌｫｰｸ	2	MAST NO.97- [LF170] INC.3-6
-	228A8-10793		FORK	ﾌｫｰｸ	2	MAST NO.1-96 [LF180] INC.3-6
-	228A8-10794		FORK	ﾌｫｰｸ	2	MAST NO.97- [LF180] INC.3-6
-	228A8-10683		FORK	ﾌｫｰｸ	2	MAST NO.1-96 [LF182] INC.3-6
-	228A8-10684		FORK	ﾌｫｰｸ	2	MAST NO.97- [LF182] INC.3-6
-	228A8-10803		FORK	ﾌｫｰｸ	2	MAST NO.1-96 [LF190] INC.3-6
-	228A8-10804		FORK	ﾌｫｰｸ	2	MAST NO.97- [LF190] INC.3-6
-	228A8-10693		FORK	ﾌｫｰｸ	2	MAST NO.1-96 [LF197] INC.3-6
-	228A8-10694		FORK	ﾌｫｰｸ	2	MAST NO.97- [LF197] INC.3-6
-	228A8-10813		FORK	ﾌｫｰｸ	2	MAST NO.1-1104 [LF200] INC.3-6
-	228A8-10814		FORK	ﾌｫｰｸ	2	MAST NO.1105- [LF200] INC.3-6
-	228A8-10823		FORK	ﾌｫｰｸ	2	MAST NO.1-1104 [LF210] INC.3-6
-	228A8-10824		FORK	ﾌｫｰｸ	2	MAST NO.1105- [LF210] INC.3-6
-	228A8-10703		FORK	ﾌｫｰｸ	2	MAST NO.1-1104 [LF212] INC.3-6
-	228A8-10704		FORK	ﾌｫｰｸ	2	MAST NO.1105- [LF212] INC.3-6
-	228A8-10713		FORK	ﾌｫｰｸ	2	MAST NO.1-1104 [LF220] INC.3-6
-	228A8-10714		FORK	ﾌｫｰｸ	2	MAST NO.1105- [LF220] INC.3-6
-	228A8-10723		FORK	ﾌｫｰｸ	2	MAST NO.1-1104 [LF227] INC.3-6
-	228A8-10724		FORK	ﾌｫｰｸ	2	MAST NO.1105- [LF227] INC.3-6
-	228A8-10733		FORK	ﾌｫｰｸ	2	MAST NO.1-1104 [LF230] INC.3-6
-	228A8-10734		FORK	ﾌｫｰｸ	2	MAST NO.1105- [LF230] INC.3-6
2	214J8-11001		STOPPER,FORK	ｽﾄｯﾊﾟ	2	INC.3-6(OLD PART)
-	214J8-11002		STOPPER,FORK	ｽﾄｯﾊﾟ	2	(NEW PART)
3	NO PART NO.	#	STOPPER	ｽﾄｯﾊﾟ	2	(OLD PART)
4	214J8-12001		HEAD	ﾍｯﾄﾞ	2	(OLD PART)

FIG.188 FORK & LIFT BRACKET [VFM28C](3CYLINDER)

(M4040620) フォーク&リフトブラケット

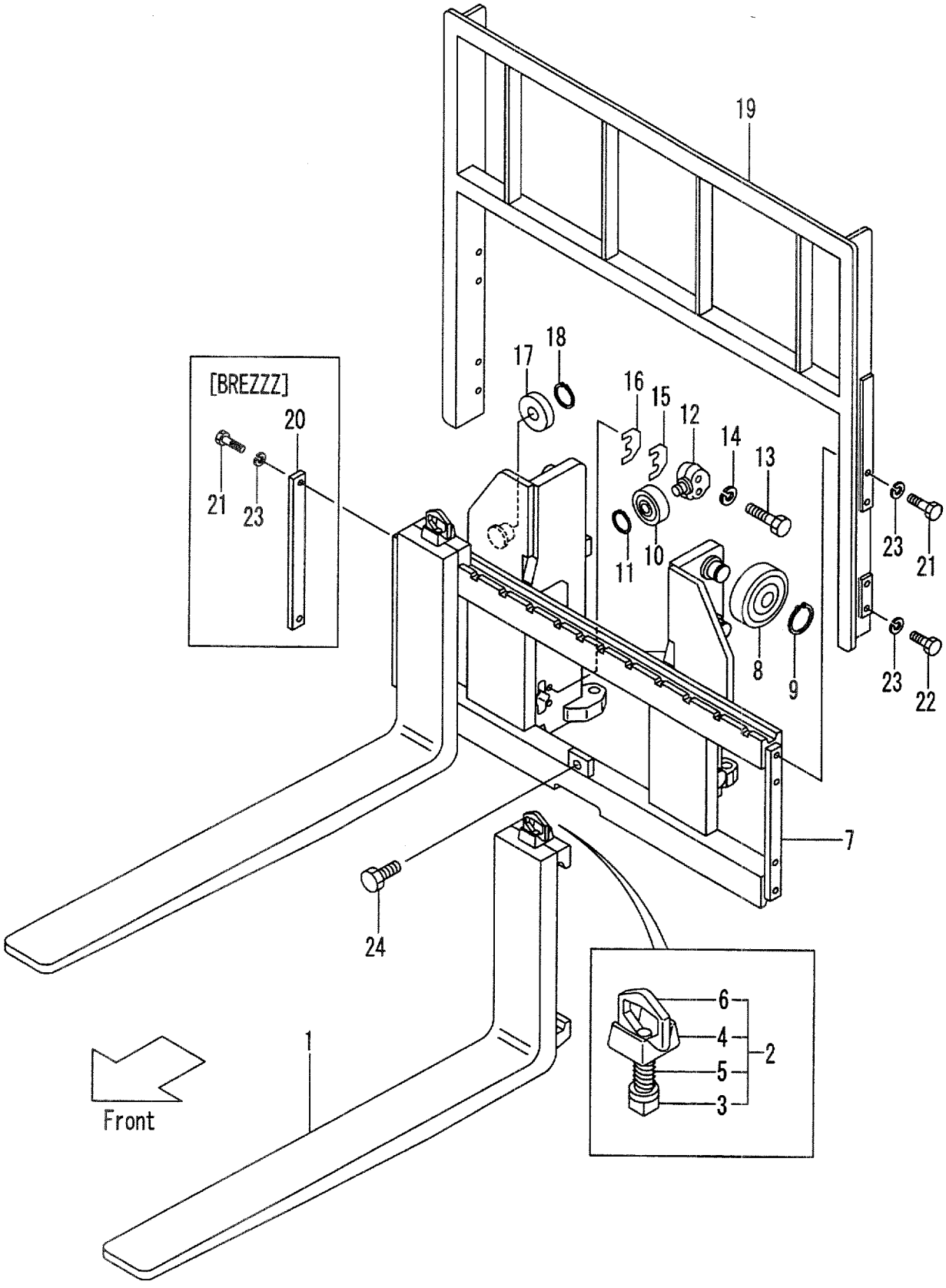

A:VFM28C(FD45,FG45)

Item No	Part No.	Mark	Description		Req'd	Remarks : Serial No.
5	214J8-12031		SPRING	ｽﾌﾟﾘﾝｸﾞ	2	(OLD PART)
6	214A8-12021		HANDLE	ﾊﾝﾄﾞﾙ	2	(OLD PART)
7	228C0-60001		BRACKET,LIFT	ﾌﾞﾗｹｯﾄ	1	
-	228C0-61001		BRACKET,LIFT	ﾌﾞﾗｹｯﾄ	1	[LBR002]
-	528C1-62201		BRACKET,LIFT	ﾌﾞﾗｹｯﾄ	1	[WFX168][WFX183][WFX200]
-	528C1-62211		BRACKET,LIFT	ﾌﾞﾗｹｯﾄ	1	[WFX135][WFX145][WFX146] [WFX154][WFX180]
-	528C1-62251		BRACKET,LIFT	ﾌﾞﾗｹｯﾄ	1	[LBR002/WFX168]
-	528C7-32101		BRACKET,LIFT	ﾌﾞﾗｹｯﾄ	1	[TRB][TRV][TC]
-	528C7-32111		BRACKET,LIFT	ﾌﾞﾗｹｯﾄ	1	[TC/WFX168]
-	528C7-32121		BRACKET,LIFT	ﾌﾞﾗｹｯﾄ	1	[TC/WFX180]
8	23818-20701		ROLLER,END,143.5	ﾛｰﾗ	6	
-	23958-22081		ROLLER,END,144.0	ﾛｰﾗ	(6)	
9	02100-00050		RING,SNAP	ｽﾅｯﾌﾟﾘﾝｸﾞ	6	
A1	NO PART NO.	#	ROLLER-ASSY,SIDE	ｻｲﾄﾞﾛｰﾗｱｯｾﾝ	2	INC.10-12
10	22198-22341		ROLLER,END,91.5	ﾛｰﾗ	2	
11	02100-00030		RING,SNAP	ｽﾅｯﾌﾟﾘﾝｸﾞ	2	
12	24609-42131		SHAFT	ｼｬﾌﾄ	2	
13	01103-16065		BOLT	ﾎﾞﾙﾄ	4	
14	02011-00016		WASHER	ﾜｯｼｬ	4	
15	24609-42151		SHIM,T-1.0	ｼﾑ	8	
16	24609-42161		SHIM,T-0.2	ｼﾑ	8	
17	22198-22341		ROLLER,END,91.5	ﾛｰﾗ	2	
-	22198-22341		ROLLER,END,91.5	ﾛｰﾗ	2	[WFX168][WFX183][WFX200] [TRB][TRV][TC][TC/WFX168]
-	22198-22341		ROLLER,END,91.5	ﾛｰﾗ	4	[WFX135][WFX145][WFX146] [WFX154][WFX180]
-	22198-22341		ROLLER,END,91.5	ﾛｰﾗ	4	[LBR002][LBR002/WFX168] [TC/WFX180]
-	24258-33401		ROLLER,END,92.0	ﾛｰﾗ	(2)	
-	24258-33401		ROLLER,END,92.0	ﾛｰﾗ	(2)	[WFX168][WFX183][WFX200] [TRB][TRV][TC][TC/WFX168]
-	24258-33401		ROLLER,END,92.0	ﾛｰﾗ	(4)	[WFX135][WFX145][WFX146] [WFX154][WFX180]
-	24258-33401		ROLLER,END,92.0	ﾛｰﾗ	(4)	[LBR002][LBR002/WFX168] [TC/WFX180]
18	02100-00030		RING,SNAP	ｽﾅｯﾌﾟﾘﾝｸﾞ	2	
-	02100-00030		RING,SNAP	ｽﾅｯﾌﾟﾘﾝｸﾞ	2	[WFX168][WFX183][WFX200] [TRB][TRV][TC][TC/WFX168]
-	02100-00030		RING,SNAP	ｽﾅｯﾌﾟﾘﾝｸﾞ	4	[WFX135][WFX145][WFX146] [WFX154][WFX180]
-	02100-00030		RING,SNAP	ｽﾅｯﾌﾟﾘﾝｸﾞ	4	[LBR002][LBR002/WFX168] [TC/WFX180]
19	224T8-22301		BACKREST	ﾊﾞｯｸﾚｽﾄ	1	
-	524T2-74001		BACKREST	ﾊﾞｯｸﾚｽﾄ	1	[EXA][EXC]
-	524T1-64301		BACKREST	ﾊﾞｯｸﾚｽﾄ	1	[WFX168][WBR]
-	524T1-64311		BACKREST	ﾊﾞｯｸﾚｽﾄ	1	[WFX180][WWB]
-	224T8-22601		BACKREST	ﾊﾞｯｸﾚｽﾄ	1	[HBR130]
-	224T8-22611		BACKREST	ﾊﾞｯｸﾚｽﾄ	1	[HBR140]
-	224T8-22621		BACKREST	ﾊﾞｯｸﾚｽﾄ	1	[HBR150]

FIG.188 FORK & LIFT BRACKET [VFM28C](3CYLINDER)

(M4040620) フォーク&リフトブラケット

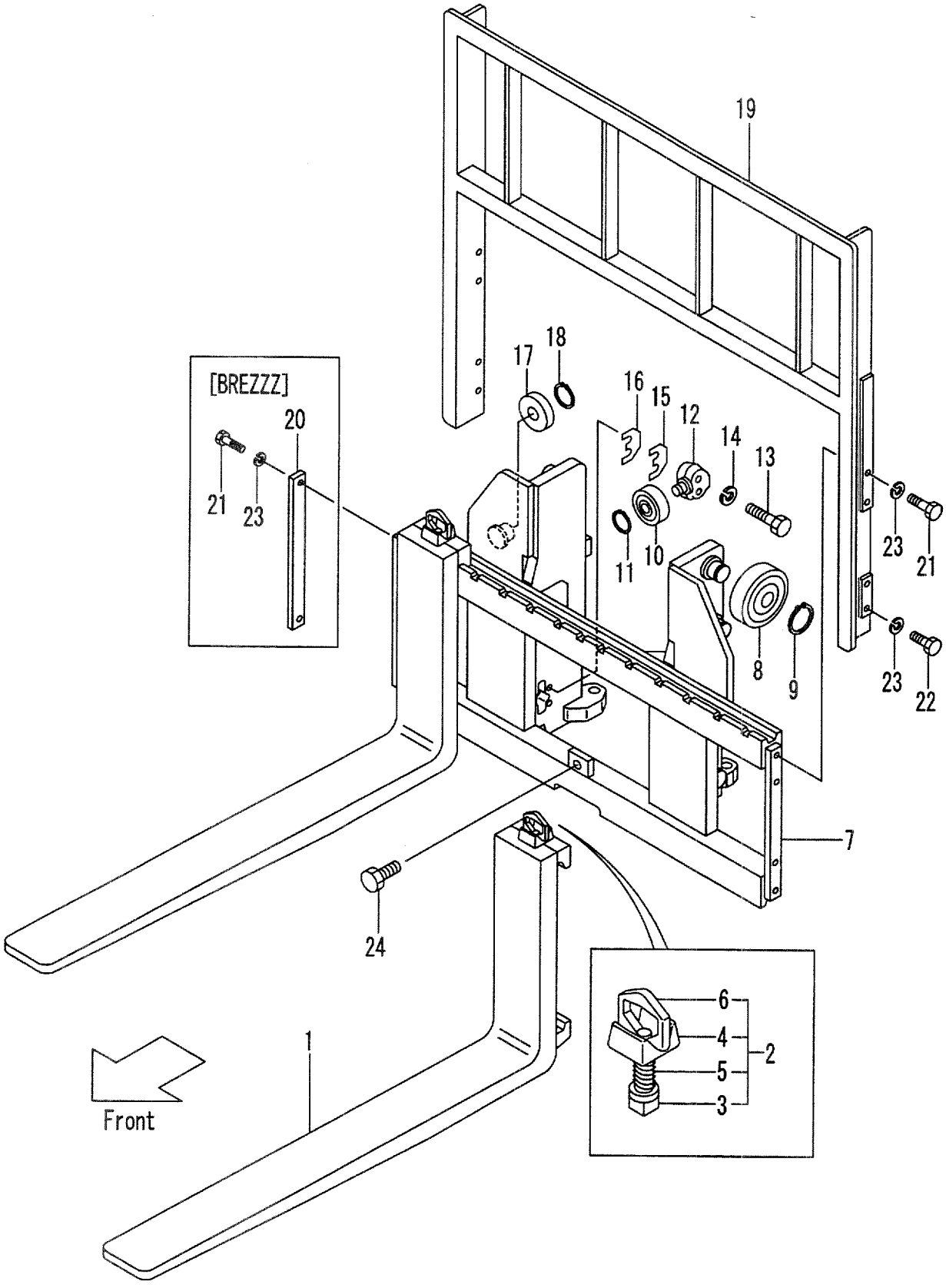

A:VFM28C(FD45,FG45)

Item No	Part No.	Mark	Description		Req'd	Remarks : Serial No.
-	224T8-22631		BACKREST	ﾊﾞｯｸﾚｽﾄ	1	[HBR160]
20	24450-92021		PLATE	ﾌﾟﾚｰﾄ	2	[BREZZZ]
21	01100-14030		BOLT	ﾎﾞﾙﾄ	4	
22	01100-14025		BOLT	ﾎﾞﾙﾄ	4	
23	02010-00014		WASHER	ﾜｯｼｬ	8	
-	02010-00014		WASHER	ﾜｯｼｬ	4	[BREZZZ]
24	01184-12025		BOLT	ﾎﾞﾙﾄ	1	

FIG.189 MAST [VFM28C](3CYLINDER)

(M4040420) マスト

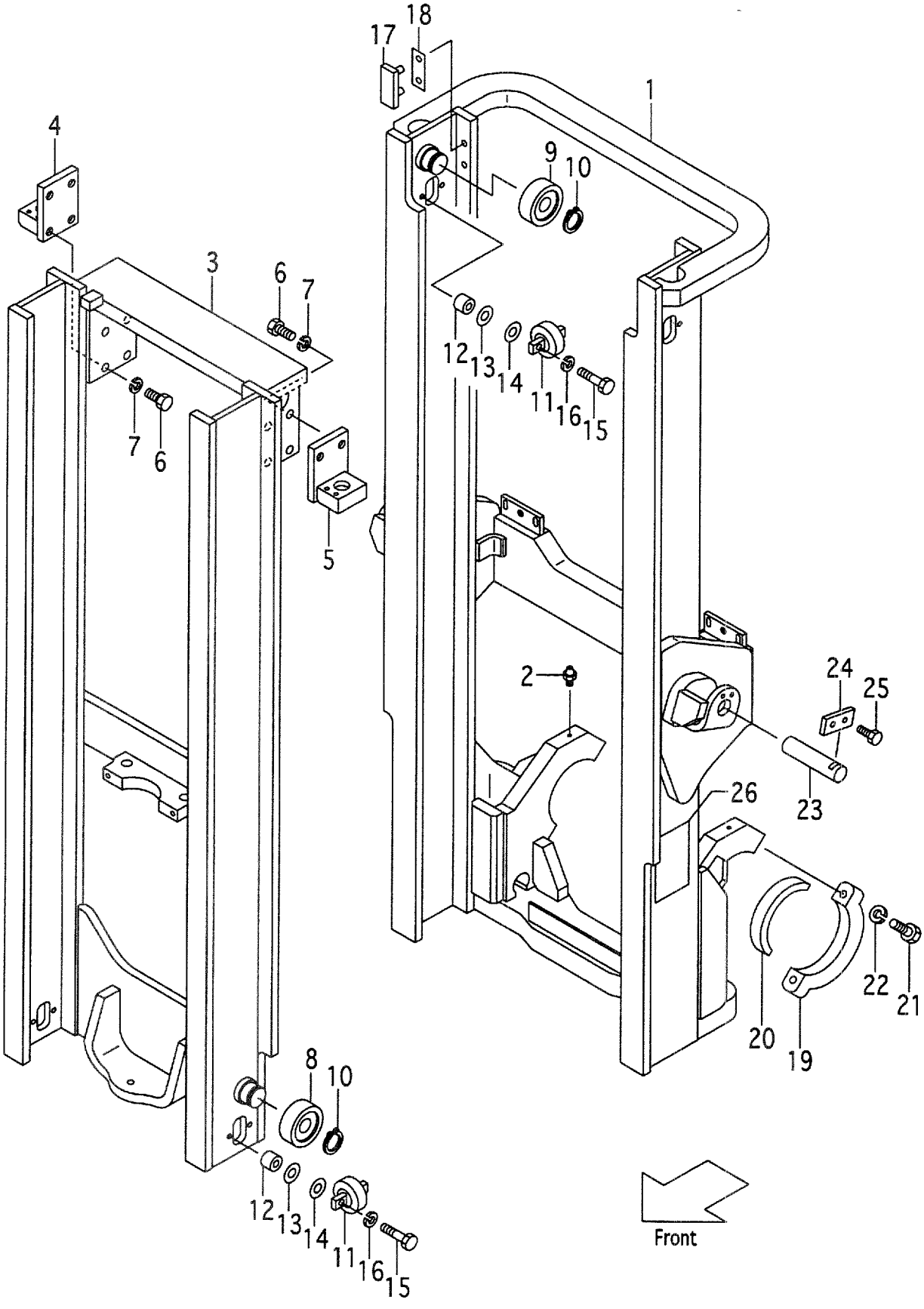

A:VFM28C(FD45,FG45)

Item No	Part No.	Mark	Description	Req'd	Remarks : Serial No.
1	228C0-40011		MAST,OUTER VFM250 アウタマスト	1	MAST NO.1-123
-	228C0-40012		MAST,OUTER VFM250 アウタマスト	1	MAST NO.124-
-	228C0-40021		MAST,OUTER VFM270 アウタマスト	1	MAST NO.1-123
-	228C0-40022		MAST,OUTER VFM270 アウタマスト	1	MAST NO.124-
-	228C0-40031		MAST,OUTER VFM275 アウタマスト	1	MAST NO.1-123
-	228C0-40032		MAST,OUTER VFM275 アウタマスト	1	MAST NO.124-
-	228C0-40001		MAST,OUTER VFM300 アウタマスト	1	MAST NO.1-123
-	228C0-40002		MAST,OUTER VFM300 アウタマスト	1	MAST NO.124-
-	228C0-40041		MAST,OUTER VFM325 アウタマスト	1	MAST NO.1-123
-	228C0-40042		MAST,OUTER VFM325 アウタマスト	1	MAST NO.124-
-	228C0-40051		MAST,OUTER VFM330 アウタマスト	1	MAST NO.1-123
-	228C0-40052		MAST,OUTER VFM330 アウタマスト	1	MAST NO.124-
-	228C0-40061		MAST,OUTER VFM350 アウタマスト	1	MAST NO.1-123
-	228C0-40062		MAST,OUTER VFM350 アウタマスト	1	MAST NO.124-
-	228C0-40071		MAST,OUTER VFM366 アウタマスト	1	MAST NO.1-123
-	228C0-40072		MAST,OUTER VFM366 アウタマスト	1	MAST NO.124-
-	228C0-40081		MAST,OUTER VFM370 アウタマスト	1	MAST NO.1-123
-	228C0-40082		MAST,OUTER VFM370 アウタマスト	1	MAST NO.124-
-	228C0-40091		MAST,OUTER VFM375 アウタマスト	1	MAST NO.1-123
-	228C0-40092		MAST,OUTER VFM375 アウタマスト	1	MAST NO.124-
-	228C0-40101		MAST,OUTER VFM400 アウタマスト	1	MAST NO.1-123
-	228C0-40102		MAST,OUTER VFM400 アウタマスト	1	MAST NO.124-
-	228C0-40111		MAST,OUTER VFM425 アウタマスト	1	MAST NO.1-123
-	228C0-40112		MAST,OUTER VFM425 アウタマスト	1	MAST NO.124-
-	228C0-40121		MAST,OUTER VFM450 アウタマスト	1	MAST NO.1-123
-	228C0-40122		MAST,OUTER VFM450 アウタマスト	1	MAST NO.124-
-	228C0-40131		MAST,OUTER VFM475 アウタマスト	1	MAST NO.1-123
-	228C0-40132		MAST,OUTER VFM475 アウタマスト	1	MAST NO.124-
-	228C0-40141		MAST,OUTER VFM500 アウタマスト	1	MAST NO.1-123
-	228C0-40142		MAST,OUTER VFM500 アウタマスト	1	MAST NO.124-
-	228C0-40151		MAST,OUTER VFM550 アウタマスト	1	MAST NO.1-123
-	228C0-40152		MAST,OUTER VFM550 アウタマスト	1	MAST NO.124-
-	228C0-40161		MAST,OUTER VFM600 アウタマスト	1	MAST NO.1-123
-	228C0-40162		MAST,OUTER VFM600 アウタマスト	1	MAST NO.124-
-	528C3-86411		MAST,OUTER VFM250 アウタマスト	1	MAST NO.1-123 [RW][HC][EXR]
-	528C3-86412		MAST,OUTER VFM250 アウタマスト	1	MAST NO.124- [RW][HC][EXR]
-	528C3-86421		MAST,OUTER VFM270 アウタマスト	1	MAST NO.1-123 [RW][HC][EXR]
-	528C3-86422		MAST,OUTER VFM270 アウタマスト	1	MAST NO.124- [RW][HC][EXR]
-	528C3-86431		MAST,OUTER VFM275 アウタマスト	1	MAST NO.1-123 [RW][HC][EXR]
-	528C3-86432		MAST,OUTER VFM275 アウタマスト	1	MAST NO.124- [RW][HC][EXR]
-	528C3-86401		MAST,OUTER VFM300 アウタマスト	1	MAST NO.1-123 [RW][HC][EXR]
-	528C3-86402		MAST,OUTER VFM300 アウタマスト	1	MAST NO.124- [RW][HC][EXR]

FIG.189 MAST [VFM28C](3CYLINDER)

(M4040420) マスト

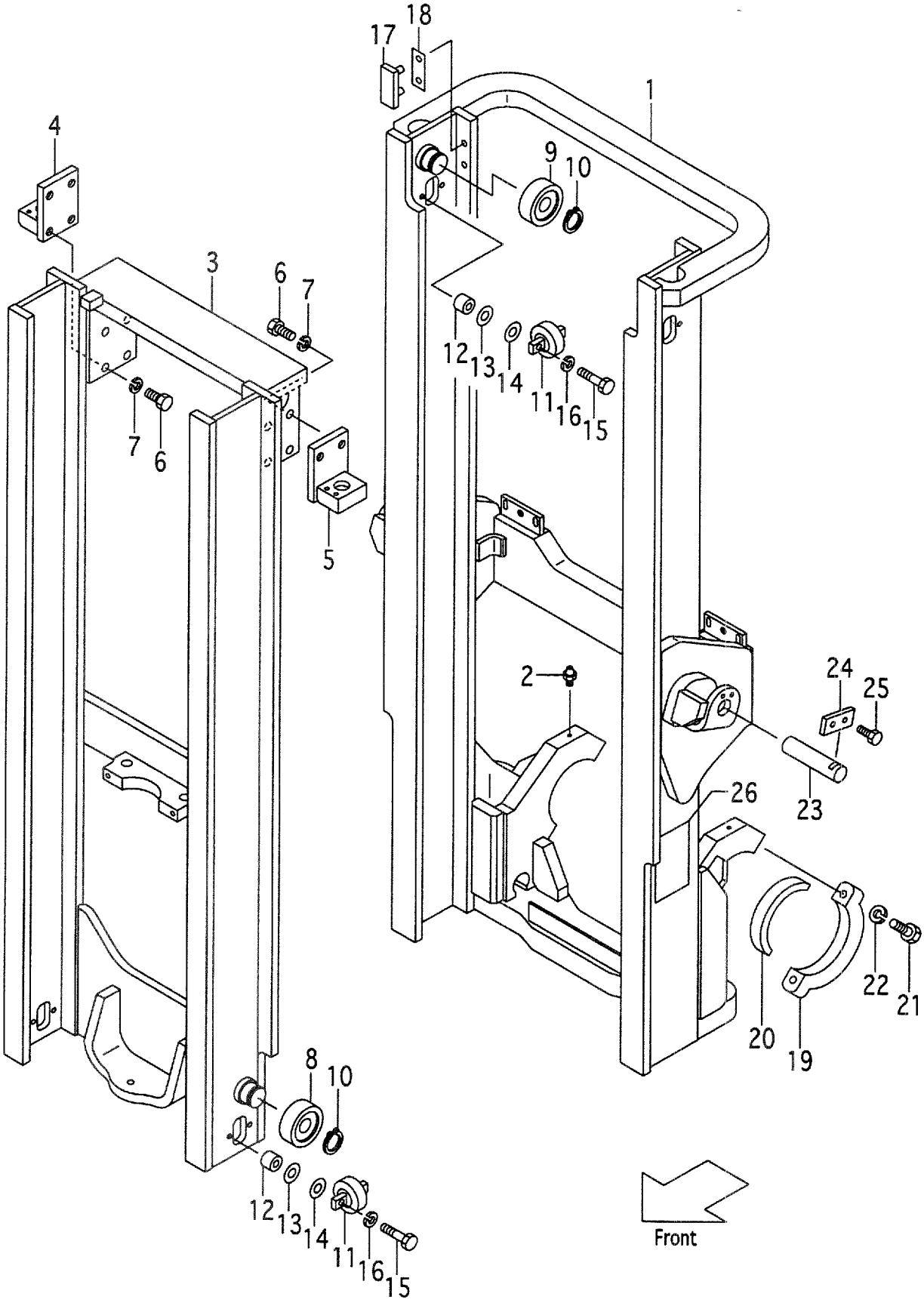

A:VFM28C(FD45,FG45)

Item No	Part No.	Mark	Description	Req'd	Remarks : Serial No.
-	528C3-86441		MAST,OUTER VFM325 アウタマスト	1	MAST NO.1-123 [RW][HC][EXR]
-	528C3-86442		MAST,OUTER VFM325 アウタマスト	1	MAST NO.124- [RW][HC][EXR]
-	528C3-86451		MAST,OUTER VFM330 アウタマスト	1	MAST NO.1-123 [RW][HC][EXR]
-	528C3-86452		MAST,OUTER VFM330 アウタマスト	1	MAST NO.124- [RW][HC][EXR]
-	528C3-86461		MAST,OUTER VFM350 アウタマスト	1	MAST NO.1-123 [RW][HC][EXR]
-	528C3-86462		MAST,OUTER VFM350 アウタマスト	1	MAST NO.124- [RW][HC][EXR]
-	528C3-86471		MAST,OUTER VFM366 アウタマスト	1	MAST NO.1-123 [RW][HC][EXR]
-	528C3-86472		MAST,OUTER VFM366 アウタマスト	1	MAST NO.124- [RW][HC][EXR]
-	528C3-86481		MAST,OUTER VFM370 アウタマスト	1	MAST NO.1-123 [RW][HC][EXR]
-	528C3-86482		MAST,OUTER VFM370 アウタマスト	1	MAST NO.124- [RW][HC][EXR]
-	528C3-86491		MAST,OUTER VFM375 アウタマスト	1	MAST NO.1-123 [RW][HC][EXR]
-	528C3-86492		MAST,OUTER VFM375 アウタマスト	1	MAST NO.124- [RW][HC][EXR]
-	528C3-86501		MAST,OUTER VFM400 アウタマスト	1	MAST NO.1-123 [RW][HC][EXR]
-	528C3-86502		MAST,OUTER VFM400 アウタマスト	1	MAST NO.124- [RW][HC][EXR]
-	528C3-86511		MAST,OUTER VFM425 アウタマスト	1	MAST NO.1-123 [RW][HC][EXR]
-	528C3-86512		MAST,OUTER VFM425 アウタマスト	1	MAST NO.124- [RW][HC][EXR]
-	528C3-86521		MAST,OUTER VFM450 アウタマスト	1	MAST NO.1-123 [RW][HC][EXR]
-	528C3-86522		MAST,OUTER VFM450 アウタマスト	1	MAST NO.124- [RW][HC][EXR]
-	528C3-86531		MAST,OUTER VFM475 アウタマスト	1	MAST NO.1-123 [RW][HC][EXR]
-	528C3-86532		MAST,OUTER VFM475 アウタマスト	1	MAST NO.124- [RW][HC][EXR]
-	528C3-86541		MAST,OUTER VFM500 アウタマスト	1	MAST NO.1-123 [RW][HC][EXR]
-	528C3-86542		MAST,OUTER VFM500 アウタマスト	1	MAST NO.124- [RW][HC][EXR]
-	528C3-86551		MAST,OUTER VFM550 アウタマスト	1	MAST NO.1-123 [RW][HC][EXR]
-	528C3-86552		MAST,OUTER VFM550 アウタマスト	1	MAST NO.124- [RW][HC][EXR]
-	528C3-86561		MAST,OUTER VFM600 アウタマスト	1	MAST NO.1-123 [RW][HC][EXR]

FIG.189 MAST [VFM28C](3CYLINDER)

(M4040420) マスト

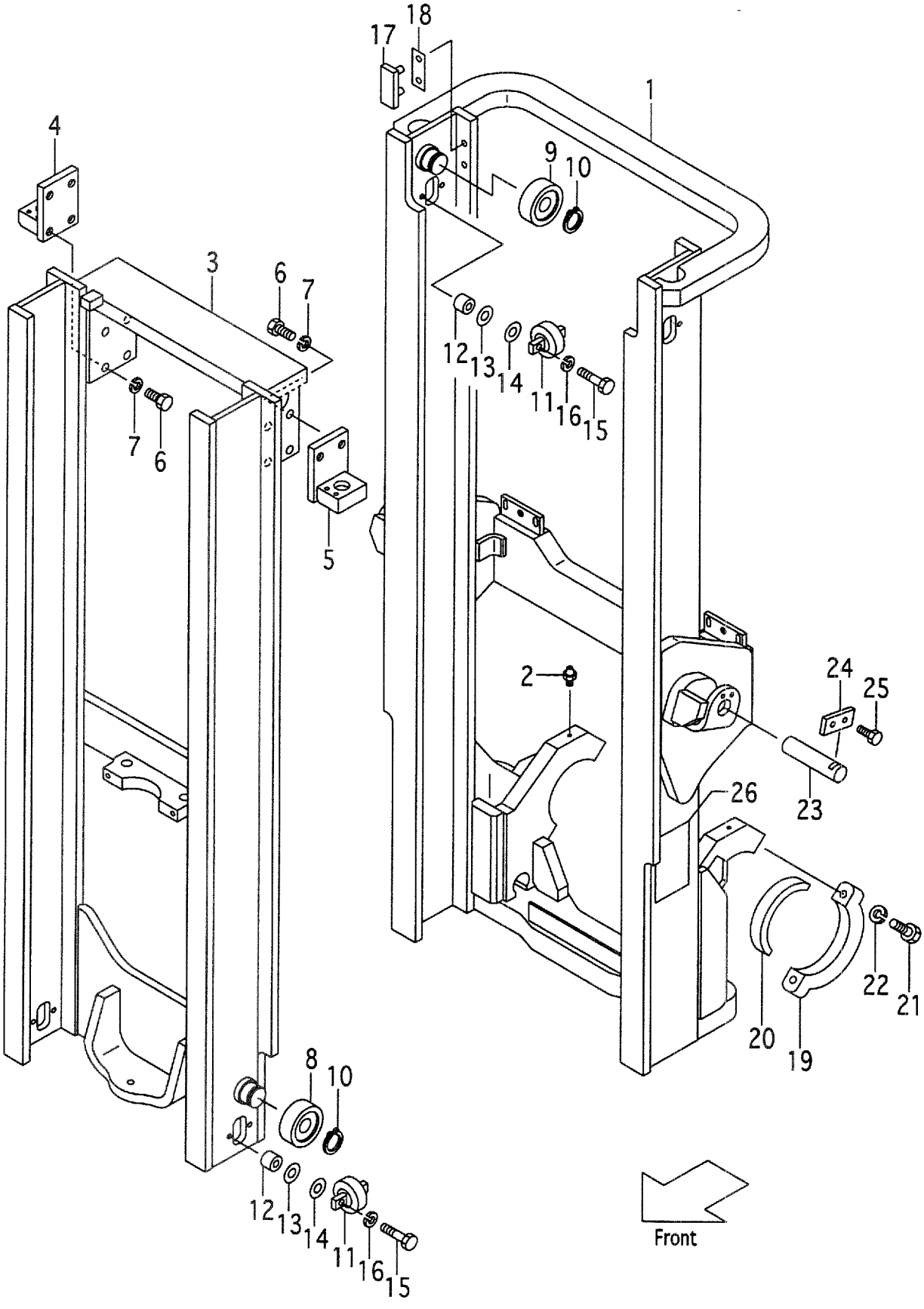

A:VFM28C(FD45,FG45)

Item No	Part No.	Mark	Description		Req'd	Remarks : Serial No.
-	528C3-86562		MAST,OUTER VFM600	ｱｳﾀﾏｽﾄ	1	MAST NO.124- [RW][HC][EXR]
2	04901-00160		FITTING	ﾌｨｯﾃｨﾝｸﾞ	2	
3	228C0-40211		MAST,INNER VFM250	ｲﾝﾅﾏｽﾄ	1	MAST NO.1-123
-	228C0-40212		MAST,INNER VFM250	ｲﾝﾅﾏｽﾄ	1	MAST NO.124-
-	228C0-40221		MAST,INNER VFM270	ｲﾝﾅﾏｽﾄ	1	MAST NO.1-123
-	228C0-40222		MAST,INNER VFM270	ｲﾝﾅﾏｽﾄ	1	MAST NO.124-
-	228C0-40231		MAST,INNER VFM275	ｲﾝﾅﾏｽﾄ	1	MAST NO.1-123
-	228C0-40232		MAST,INNER VFM275	ｲﾝﾅﾏｽﾄ	1	MAST NO.124-
-	228C0-40201		MAST,INNER VFM300	ｲﾝﾅﾏｽﾄ	1	MAST NO.1-123
-	228C0-40202		MAST,INNER VFM300	ｲﾝﾅﾏｽﾄ	1	MAST NO.124-
-	228C0-40241		MAST,INNER VFM325	ｲﾝﾅﾏｽﾄ	1	MAST NO.1-123
-	228C0-40242		MAST,INNER VFM325	ｲﾝﾅﾏｽﾄ	1	MAST NO.124-
-	228C0-40251		MAST,INNER VFM330	ｲﾝﾅﾏｽﾄ	1	MAST NO.1-123
-	228C0-40252		MAST,INNER VFM330	ｲﾝﾅﾏｽﾄ	1	MAST NO.124-
-	228C0-40261		MAST,INNER VFM350	ｲﾝﾅﾏｽﾄ	1	MAST NO.1-123
-	228C0-40262		MAST,INNER VFM350	ｲﾝﾅﾏｽﾄ	1	MAST NO.124-
-	228C0-40271		MAST,INNER VFM366	ｲﾝﾅﾏｽﾄ	1	MAST NO.1-123
-	228C0-40272		MAST,INNER VFM366	ｲﾝﾅﾏｽﾄ	1	MAST NO.124-
-	228C0-40281		MAST,INNER VFM370	ｲﾝﾅﾏｽﾄ	1	MAST NO.1-123
-	228C0-40282		MAST,INNER VFM370	ｲﾝﾅﾏｽﾄ	1	MAST NO.124-
-	228C0-40291		MAST,INNER VFM375	ｲﾝﾅﾏｽﾄ	1	MAST NO.1-123
-	228C0-40292		MAST,INNER VFM375	ｲﾝﾅﾏｽﾄ	1	MAST NO.124-
-	228C0-40301		MAST,INNER VFM400	ｲﾝﾅﾏｽﾄ	1	MAST NO.1-123
-	228C0-40302		MAST,INNER VFM400	ｲﾝﾅﾏｽﾄ	1	MAST NO.124-
-	228C0-40311		MAST,INNER VFM425	ｲﾝﾅﾏｽﾄ	1	MAST NO.1-123
-	228C0-40312		MAST,INNER VFM425	ｲﾝﾅﾏｽﾄ	1	MAST NO.124-
-	228C0-40321		MAST,INNER VFM450	ｲﾝﾅﾏｽﾄ	1	MAST NO.1-123
-	228C0-40322		MAST,INNER VFM450	ｲﾝﾅﾏｽﾄ	1	MAST NO.124-
-	228C0-40331		MAST,INNER VFM475	ｲﾝﾅﾏｽﾄ	1	MAST NO.1-123
-	228C0-40332		MAST,INNER VFM475	ｲﾝﾅﾏｽﾄ	1	MAST NO.124-
-	228C0-40341		MAST,INNER VFM500	ｲﾝﾅﾏｽﾄ	1	MAST NO.1-123
-	228C0-40342		MAST,INNER VFM500	ｲﾝﾅﾏｽﾄ	1	MAST NO.124-
-	228C0-40351		MAST,INNER VFM550	ｲﾝﾅﾏｽﾄ	1	MAST NO.1-123
-	228C0-40352		MAST,INNER VFM550	ｲﾝﾅﾏｽﾄ	1	MAST NO.124-
-	228C0-40361		MAST,INNER VFM600	ｲﾝﾅﾏｽﾄ	1	MAST NO.1-123
-	228C0-40362		MAST,INNER VFM600	ｲﾝﾅﾏｽﾄ	1	MAST NO.124-
4	224T0-43001		HEAD,PISTON,RH	ﾍｯﾄﾞ	1	
5	224T0-43051		HEAD,PISTON,LH	ﾍｯﾄﾞ	1	
6	01103-20045		BOLT	ﾎﾞﾙﾄ	8	
7	02011-00020		WASHER	ﾜｯｼｬ	8	
8	23818-20701		ROLLER,END,143.5	ﾛｰﾗ	2	
-	23958-22081		ROLLER,END,144	ﾛｰﾗ	(2)	
9	23818-20701		ROLLER,END,143.5	ﾛｰﾗ	2	
10	02100-00050		RING,SNAP	ｽﾅｯﾌﾟﾘﾝｸﾞ	4	
11	23818-30301		ROLLER,SIDE	ﾛｰﾗ	4	
12	23818-30071		SPACER	ｽﾍﾟｰｻ	8	MAST NO.1-123
-	224T8-31111		SPACER	ｽﾍﾟｰｻ	8	MAST NO.124-
13	22548-34051		SHIM,T-0.5	ｼﾑ	16	
14	22548-34061		SHIM,T-1.0	ｼﾑ	8	

FIG.189 MAST [VFM28C](3CYLINDER)

(M4040420) マスト

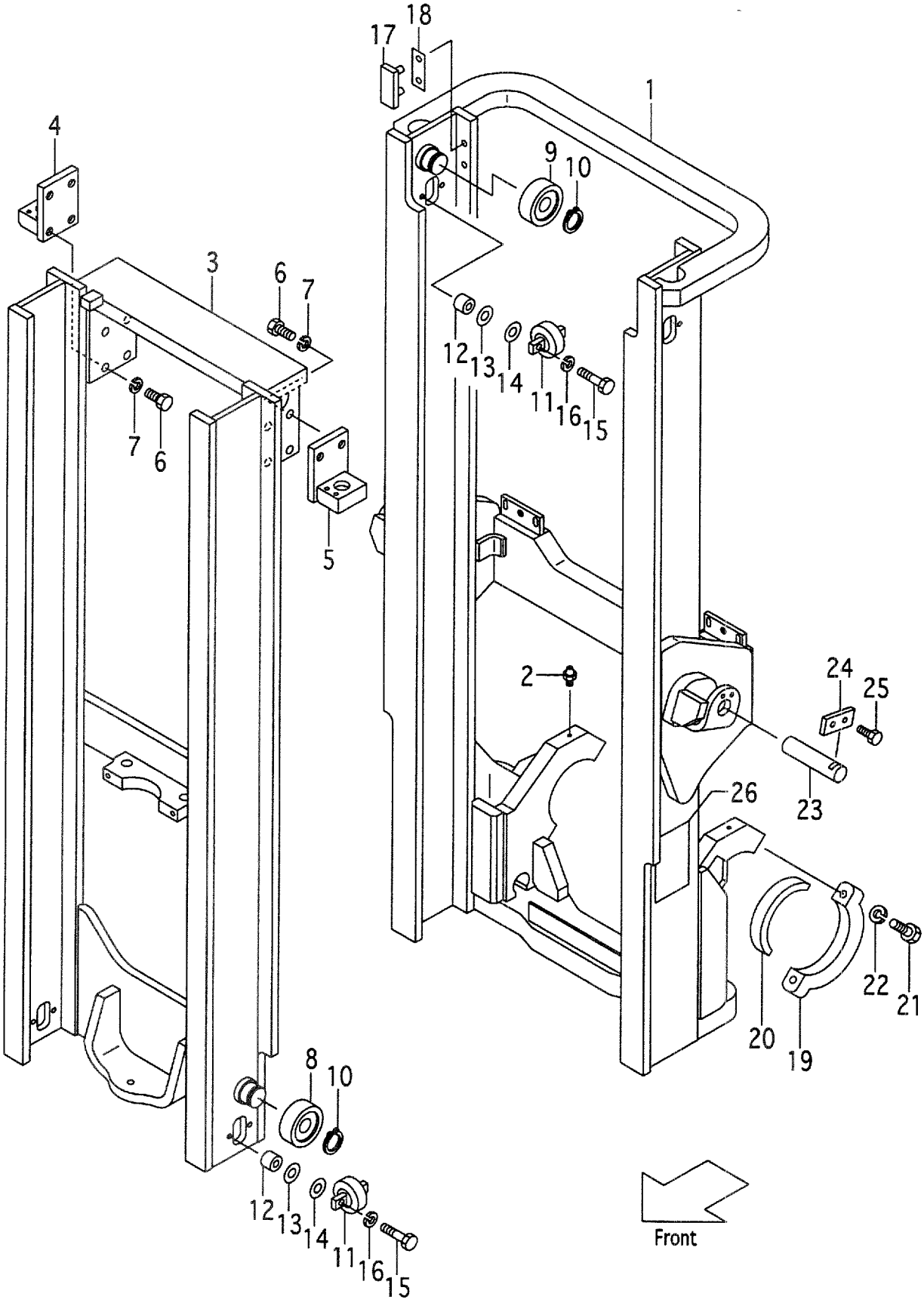

A:VFM28C(FD45,FG45)

Item No	Part No.	Mark	Description		Req'd	Remarks : Serial No.
15	01100-12045		BOLT	ﾎﾞﾙﾄ	8	
16	02010-00012		WASHER	ﾜｯｼｬ	8	
17	22678-32001		SLIPPER,T-4	ｽﾘｯﾊﾟ	2	
18	22679-43231		SHIM,T-0.5	ｼﾑ	4	
19	224T8-02201		CAP	ｷｬｯﾌﾟ	2	
20	224T8-02001		BUSHING	ﾌﾞｯｼﾝｸﾞ	2	
21	01103-20085		BOLT	ﾎﾞﾙﾄ	4	
22	02010-00020		WASHER	ﾜｯｼｬ	4	
23	224T8-52501		PIN	ﾋﾟﾝ	2	
24	23648-50161		PLATE	ﾌﾟﾚｰﾄ	2	
25	01184-10020		BOLT	ﾎﾞﾙﾄ	4	
26	23678-06002		PLATE,NAME	ﾌﾟﾚｰﾄ	1	

LAMP GUARD

FIG.190 [(HL,HLG/HL,BKH)/VFM28C](3CYLINDER)(OLD PART)

(M40483B0) ﾗﾝﾌﾟｶﾞｰﾄﾞ

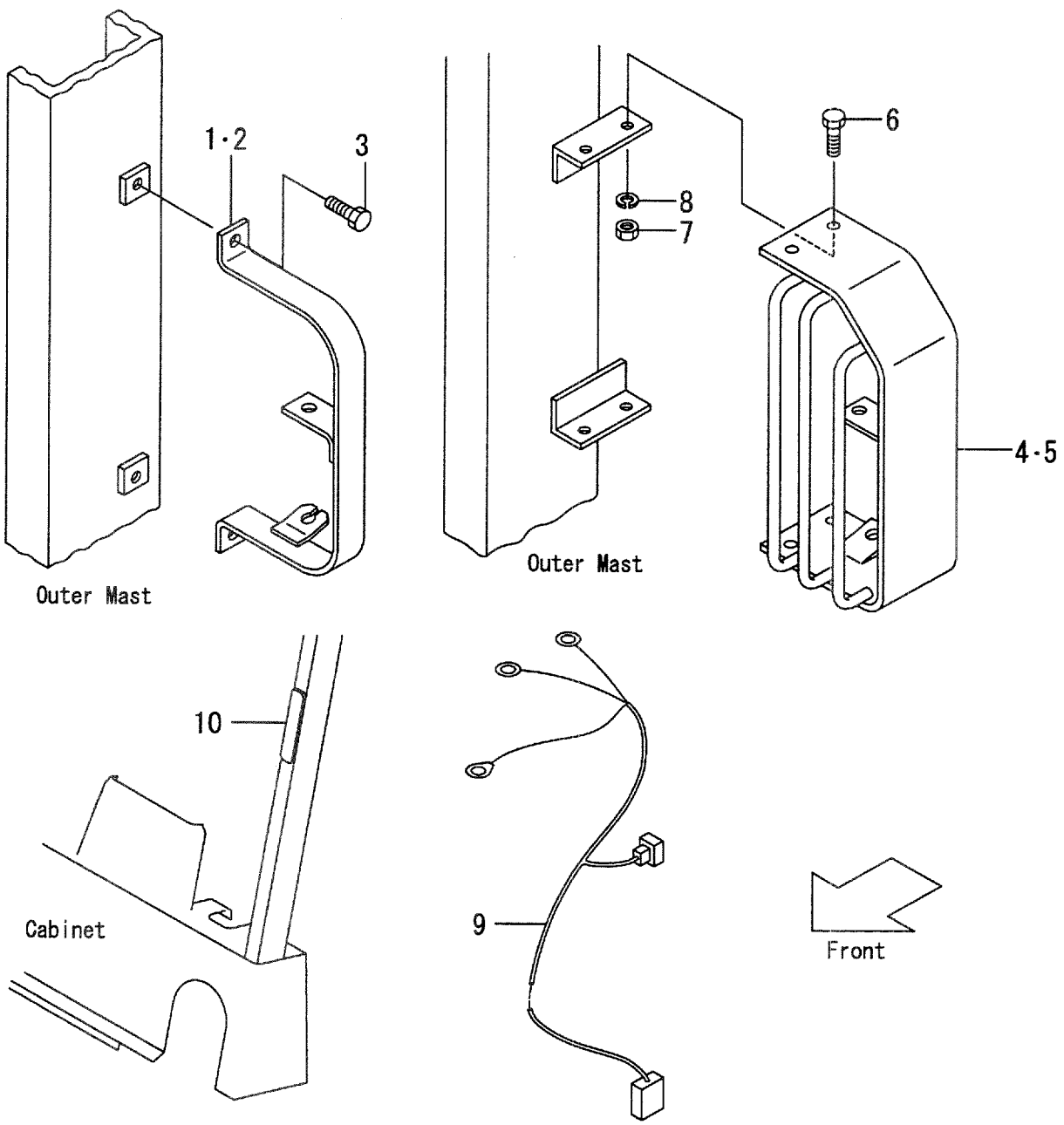

A:VFM28C(FD45,FG45)

Item No	Part No.	Mark	Description		Req'd	Remarks : Serial No.
1	224W2-43001		BRACKET,LH	ﾌﾞﾗｹｯﾄ	1	[HL]
2	224W2-43011		BRACKET,RH	ﾌﾞﾗｹｯﾄ	1	[HL]
3	01184-12020		BOLT	ﾎﾞﾙﾄ	4	[HL]
4	224W2-43031		GUARD,HEAD-LAMP,LH	ｶﾞｰﾄﾞ	1	[HLG/HL][BKH]
5	224W2-43041		GUARD,HEAD-LAMP,RH	ｶﾞｰﾄﾞ	1	[HLG/HL][BKH]
6	01100-12030		BOLT	ﾎﾞﾙﾄ	8	[HLG/HL][BKH]
7	02010-00012		WASHER	ﾜｯｼｬ	8	[HLG/HL][BKH]
8	01400-00012		NUT	ﾅｯﾄ	8	[HLG/HL][BKH]
9	224W2-43081		WIRE-HARNESS	ﾜｲﾔﾊｰﾈｽ	2	[HL/VM250-275] [HGL/HL/VM250-275] [BKH/VM250-275]
-	224W2-43091		WIRE-HARNESS	ﾜｲﾔﾊｰﾈｽ	2	[HL/VM300-600] [HGL/HL/VM300-600] [BKH/VM300-600]
10	524W5-42061		BRACKET	ﾌﾞﾗｹｯﾄ	2	[HL][HLG/HL][BKH]

LAMP GUARD

FIG.190A [(HL,BKH)/VFM28C](3CYLINDER)(NEW PART)

(M40483B1) ﾗﾝﾌﾟｶﾞｰﾄﾞ

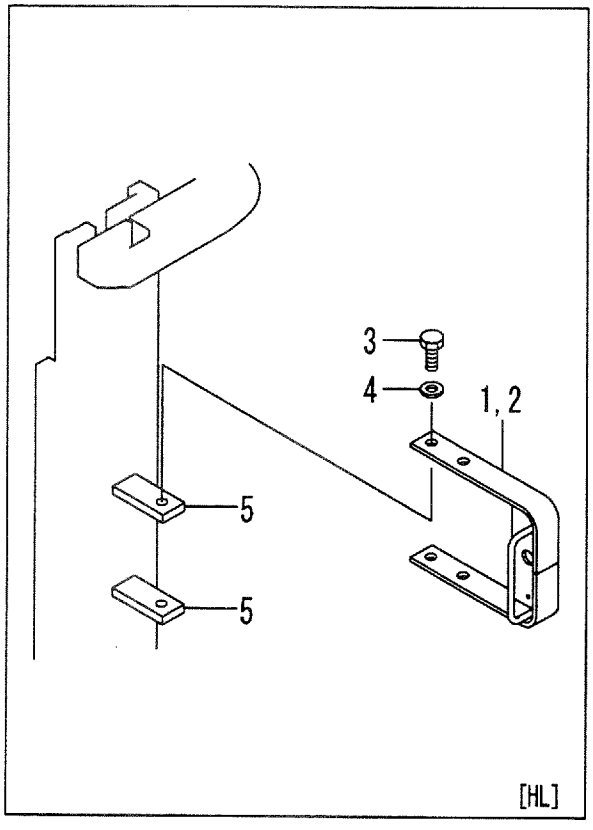

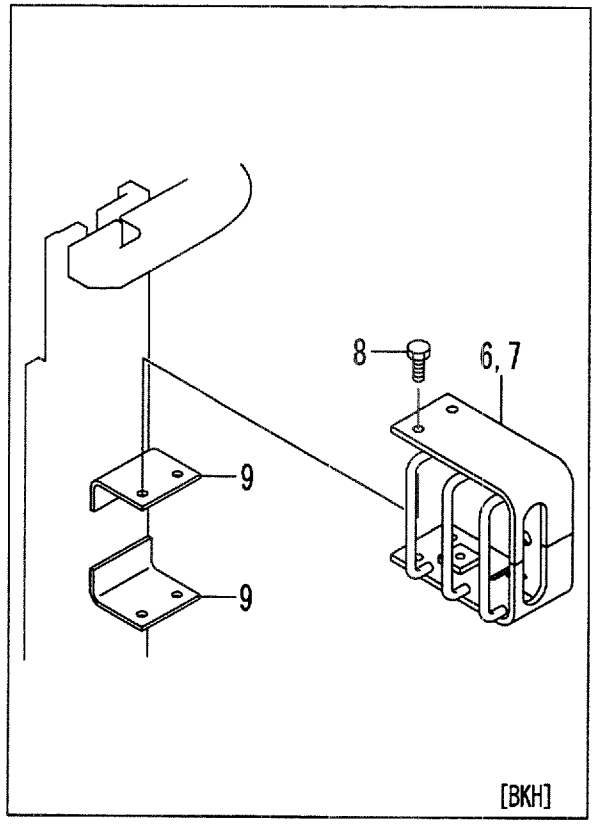

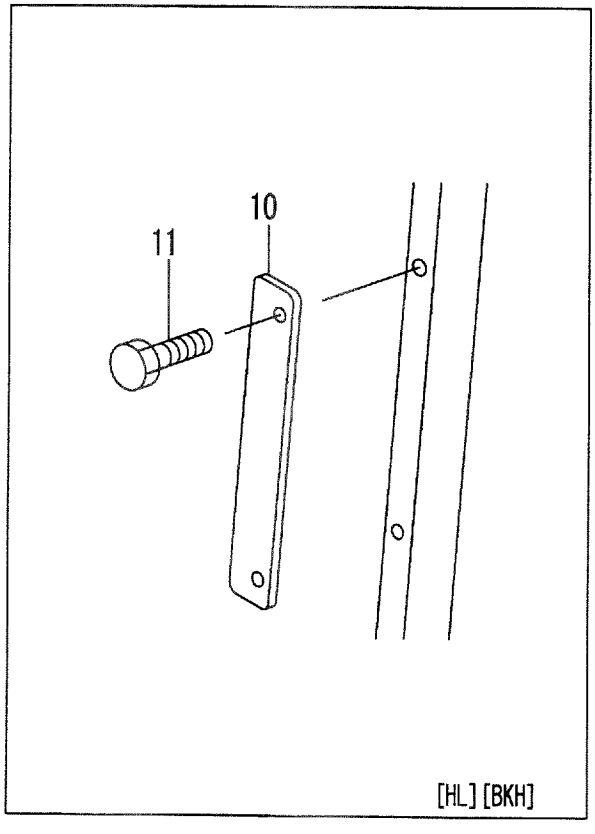

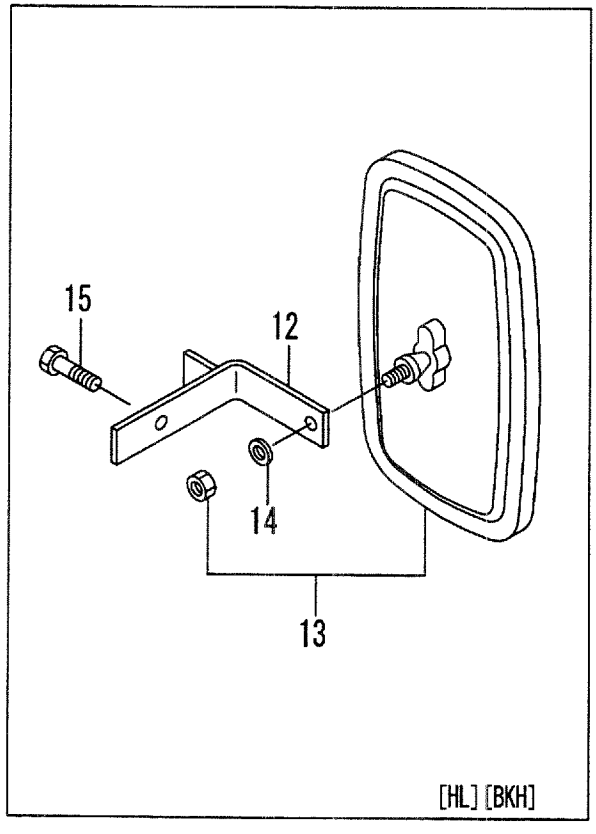

A:VFM28C(FD45,FG45)

Item No	Part No.	Mark	Description		Req'd	Remarks : Serial No.
1	534A9-22011		BRACKET,LH	ﾌﾞﾗｹｯﾄ	1	[HL]
2	534A9-22001		BRACKET,RH	ﾌﾞﾗｹｯﾄ	1	[HL]
3	01100-12020		BOLT	ﾎﾞﾙﾄ	4	[HL]
4	02010-00012		WASHER	ﾜｯｼｬ	4	[HL]
5	535C9-22111		BLOCK,TAPPED	ﾌﾞﾛｯｸ	4	[HL]
6	534A4-22011		GUARD,LH	ｶﾞｰﾄﾞ	1	[BKH]
7	534A4-22001		GUARD,RH	ｶﾞｰﾄﾞ	1	[BKH]
8	01184-12020		BOLT & WASHER	ﾎﾞﾙﾄ&ﾜｯｼｬ	8	[BKH]
9	535C9-22101		BRACKET	ﾌﾞﾗｹｯﾄ	4	[BKH]
10	534A9-22301		PLATE	ﾌﾟﾚｰﾄ	2	[HL][BKH]
11	01100-08012		BOLT	ﾎﾞﾙﾄ	4	[HL][BKH]
12	535C9-22401		BRACKET	ﾌﾞﾗｹｯﾄ	2	[HL][BKH]
13	239A9-92001		MIRROR	ﾐﾗｰ	2	[HL][BKH]
14	222A9-32011		WASHER	ﾜｯｼｬ	2	[HL][BKH]
15	514A5-12021		BOLT	ﾎﾞﾙﾄ	2	[HL][BKH]
16	535C9-22301	+	WIRE-HARNESS	ﾜｲﾔﾊｰﾈｽ	2	[HL][BKH]
17	27732-42221	+	CLAMP	ｸﾗﾝﾌﾟ	4	[HL][BKH]
18	04913-11380	+	BAND	ﾊﾞﾝﾄﾞ	6	[HL][BKH]

FIG.191 LIFT CYLINDER (FRONT)[VFM28C](3CYLINDER)

(M4040520) リフトシリンダ

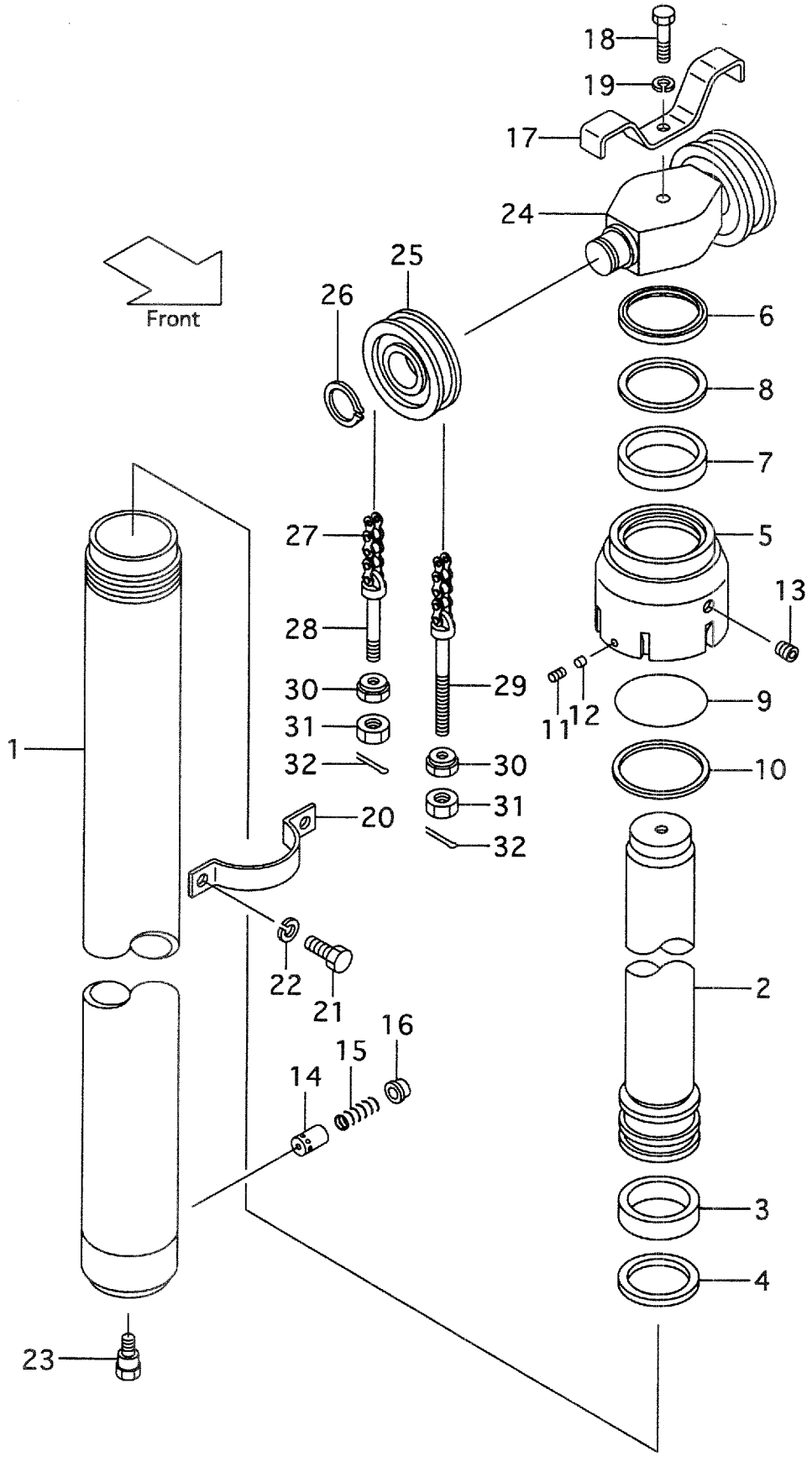

A:VFM28C(FD45,FG45)

Item No	Part No.	Mark	Description	Req'd	Remarks : Serial No.
A1	228C0-50011		CYL-ASSY,LIFT VFM250 ﾘﾌﾄｼﾘﾝﾀﾞｱｯｾﾝ	1	MAST NO.1-116 INC.1-16
-	228C0-50012		CYL-ASSY,LIFT VFM250 ﾘﾌﾄｼﾘﾝﾀﾞｱｯｾﾝ	1	MAST NO.117- INC.1-16
-	228C0-80021		CYL-ASSY,LIFT VFM270 ﾘﾌﾄｼﾘﾝﾀﾞｱｯｾﾝ	1	MAST NO.1-116 INC.1-16
-	228C0-80022		CYL-ASSY,LIFT VFM270 ﾘﾌﾄｼﾘﾝﾀﾞｱｯｾﾝ	1	MAST NO.117- INC.1-16
-	228C0-50021		CYL-ASSY,LIFT VFM275 ﾘﾌﾄｼﾘﾝﾀﾞｱｯｾﾝ	1	MAST NO.1-116 INC.1-16
-	228C0-50022		CYL-ASSY,LIFT VFM275 ﾘﾌﾄｼﾘﾝﾀﾞｱｯｾﾝ	1	MAST NO.117- INC.1-16
-	228C0-50001		CYL-ASSY,LIFT VFM300 ﾘﾌﾄｼﾘﾝﾀﾞｱｯｾﾝ	1	MAST NO.1-116 INC.1-16
-	228C0-50002		CYL-ASSY,LIFT VFM300 ﾘﾌﾄｼﾘﾝﾀﾞｱｯｾﾝ	1	MAST NO.117- INC.1-16
-	228C0-80031		CYL-ASSY,LIFT VFM325 ﾘﾌﾄｼﾘﾝﾀﾞｱｯｾﾝ	1	MAST NO.1-116 INC.1-16
-	228C0-80032		CYL-ASSY,LIFT VFM325 ﾘﾌﾄｼﾘﾝﾀﾞｱｯｾﾝ	1	MAST NO.117- INC.1-16
-	228C0-50031		CYL-ASSY,LIFT VFM330 ﾘﾌﾄｼﾘﾝﾀﾞｱｯｾﾝ	1	MAST NO.1-116 INC.1-16
-	228C0-50032		CYL-ASSY,LIFT VFM330 ﾘﾌﾄｼﾘﾝﾀﾞｱｯｾﾝ	1	MAST NO.117- INC.1-16
-	228C0-50041		CYL-ASSY,LIFT VFM350 ﾘﾌﾄｼﾘﾝﾀﾞｱｯｾﾝ	1	MAST NO.1-116 INC.1-16
-	228C0-50042		CYL-ASSY,LIFT VFM350 ﾘﾌﾄｼﾘﾝﾀﾞｱｯｾﾝ	1	MAST NO.117- INC.1-16
-	228C0-80051		CYL-ASSY,LIFT VFM366 ﾘﾌﾄｼﾘﾝﾀﾞｱｯｾﾝ	1	MAST NO.1-116 INC.1-16
-	228C0-80052		CYL-ASSY,LIFT VFM366 ﾘﾌﾄｼﾘﾝﾀﾞｱｯｾﾝ	1	MAST NO.117- INC.1-16
-	228C0-50051		CYL-ASSY,LIFT VFM370 ﾘﾌﾄｼﾘﾝﾀﾞｱｯｾﾝ	1	MAST NO.1-116 INC.1-16
-	228C0-50052		CYL-ASSY,LIFT VFM370 ﾘﾌﾄｼﾘﾝﾀﾞｱｯｾﾝ	1	MAST NO.117- INC.1-16
-	228C0-50061		CYL-ASSY,LIFT VFM375 ﾘﾌﾄｼﾘﾝﾀﾞｱｯｾﾝ	1	MAST NO.1-116 INC.1-16
-	228C0-50062		CYL-ASSY,LIFT VFM375 ﾘﾌﾄｼﾘﾝﾀﾞｱｯｾﾝ	1	MAST NO.117- INC.1-16
-	228C0-80071		CYL-ASSY,LIFT VFM400 ﾘﾌﾄｼﾘﾝﾀﾞｱｯｾﾝ	1	MAST NO.1-116 INC.1-16
-	228C0-80072		CYL-ASSY,LIFT VFM400 ﾘﾌﾄｼﾘﾝﾀﾞｱｯｾﾝ	1	MAST NO.117- INC.1-16
-	228C0-50071		CYL-ASSY,LIFT VFM425 ﾘﾌﾄｼﾘﾝﾀﾞｱｯｾﾝ	1	MAST NO.1-116 INC.1-16
-	228C0-50072		CYL-ASSY,LIFT VFM425 ﾘﾌﾄｼﾘﾝﾀﾞｱｯｾﾝ	1	MAST NO.117- INC.1-16
-	228C0-50081		CYL-ASSY,LIFT VFM450 ﾘﾌﾄｼﾘﾝﾀﾞｱｯｾﾝ	1	MAST NO.1-116 INC.1-16

FIG.191 LIFT CYLINDER (FRONT)[VFM28C](3CYLINDER)

(M4040520) リフトシリンダ

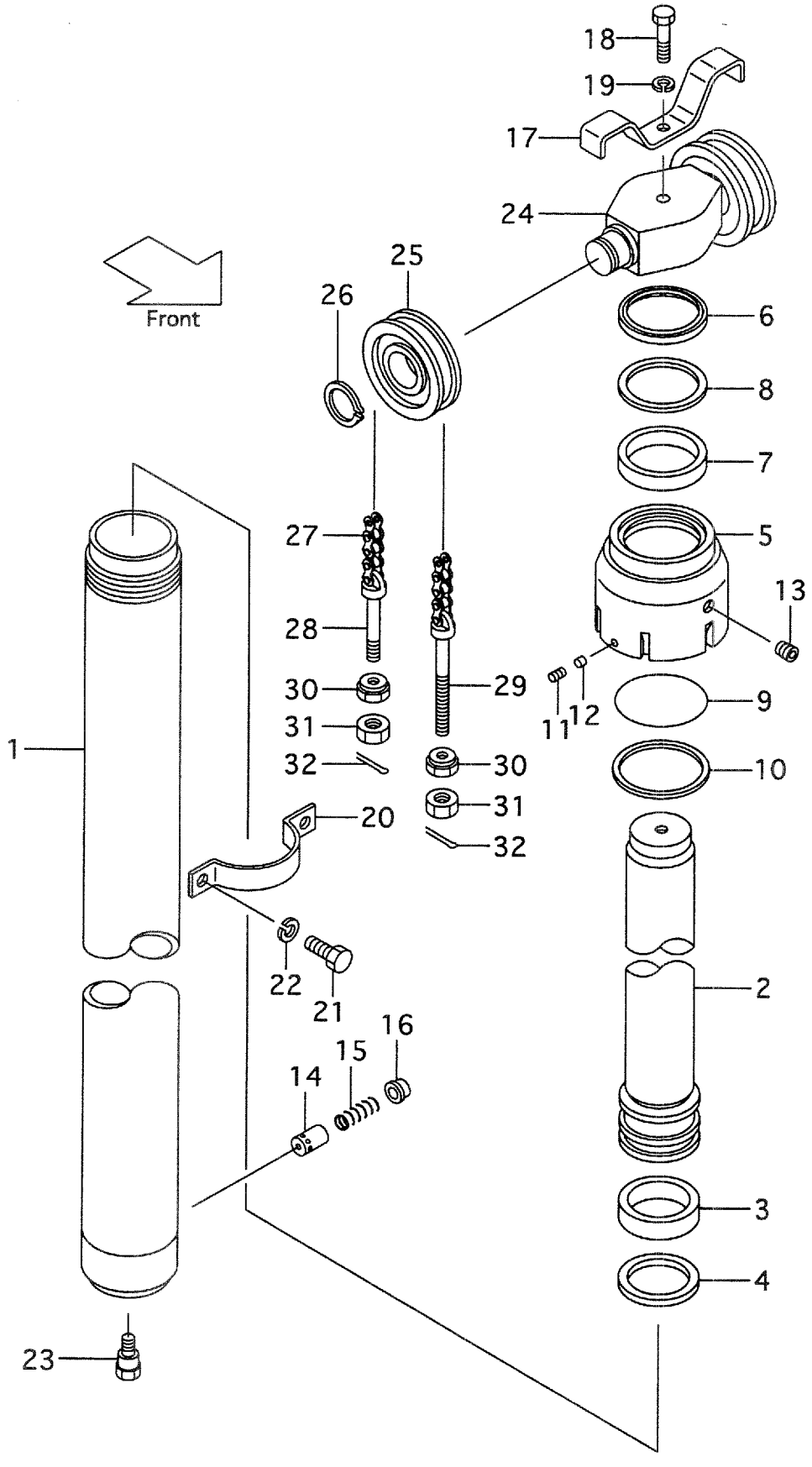

A:VFM28C(FD45,FG45)

Item No	Part No.	Mark	Description	Req'd	Remarks : Serial No.
-	228C0-50082		CYL-ASSY,LIFT VFM450 ﾘﾌﾄｼﾘﾝﾀﾞｱｯｾﾝ	1	MAST NO.117-INC.1-16
-	228C0-50091		CYL-ASSY,LIFT VFM475 ﾘﾌﾄｼﾘﾝﾀﾞｱｯｾﾝ	1	MAST NO.1-116 INC.1-16
-	228C0-50092		CYL-ASSY,LIFT VFM475 ﾘﾌﾄｼﾘﾝﾀﾞｱｯｾﾝ	1	MAST NO.117-INC.1-16
-	228C0-50101		CYL-ASSY,LIFT VFM500 ﾘﾌﾄｼﾘﾝﾀﾞｱｯｾﾝ	1	MAST NO.1-116 INC.1-16
-	228C0-50102		CYL-ASSY,LIFT VFM500 ﾘﾌﾄｼﾘﾝﾀﾞｱｯｾﾝ	1	MAST NO.117-INC.1-16
-	228C0-50111		CYL-ASSY,LIFT VFM550 ﾘﾌﾄｼﾘﾝﾀﾞｱｯｾﾝ	1	MAST NO.1-116 INC.1-16
-	228C0-50112		CYL-ASSY,LIFT VFM550 ﾘﾌﾄｼﾘﾝﾀﾞｱｯｾﾝ	1	MAST NO.117-INC.1-16
-	228C0-50121		CYL-ASSY,LIFT VFM600 ﾘﾌﾄｼﾘﾝﾀﾞｱｯｾﾝ	1	MAST NO.1-116 INC.1-16
-	228C0-50122		CYL-ASSY,LIFT VFM600 ﾘﾌﾄｼﾘﾝﾀﾞｱｯｾﾝ	1	MAST NO.117-INC.1-16
1	228C0-50211		TUBE VFM250 ﾁｭｰﾌﾞ	1	
-	228C0-80221		TUBE VFM270 ﾁｭｰﾌﾞ	1	
-	228C0-50221		TUBE VFM275 ﾁｭｰﾌﾞ	1	
-	228C0-50201		TUBE VFM300 ﾁｭｰﾌﾞ	1	
-	228C0-80231		TUBE VFM325 ﾁｭｰﾌﾞ	1	
-	228C0-50231		TUBE VFM330 ﾁｭｰﾌﾞ	1	
-	228C0-50241		TUBE VFM350 ﾁｭｰﾌﾞ	1	
-	228C0-80251		TUBE VFM366 ﾁｭｰﾌﾞ	1	
-	228C0-50251		TUBE VFM370 ﾁｭｰﾌﾞ	1	
-	228C0-50261		TUBE VFM375 ﾁｭｰﾌﾞ	1	
-	228C0-80271		TUBE VFM400 ﾁｭｰﾌﾞ	1	
-	228C0-50271		TUBE VFM425 ﾁｭｰﾌﾞ	1	
-	228C0-50281		TUBE VFM450 ﾁｭｰﾌﾞ	1	
-	228C0-50291		TUBE VFM475 ﾁｭｰﾌﾞ	1	
-	228C0-50301		TUBE VFM500 ﾁｭｰﾌﾞ	1	
-	228C0-50311		TUBE VFM550 ﾁｭｰﾌﾞ	1	
-	228C0-50321		TUBE VFM600 ﾁｭｰﾌﾞ	1	
2	228C0-50411		ROD,PISTON VFM250 ﾛｯﾄﾞ	1	
-	228C0-80421		ROD,PISTON VFM270 ﾛｯﾄﾞ	1	
-	228C0-50421		ROD,PISTON VFM275 ﾛｯﾄﾞ	1	
-	228C0-50401		ROD,PISTON VFM300 ﾛｯﾄﾞ	1	
-	228C0-80431		ROD,PISTON VFM325 ﾛｯﾄﾞ	1	
-	228C0-50431		ROD,PISTON VFM330 ﾛｯﾄﾞ	1	
-	228C0-50441		ROD,PISTON VFM350 ﾛｯﾄﾞ	1	
-	228C0-80451		ROD,PISTON VFM366 ﾛｯﾄﾞ	1	
-	228C0-50451		ROD,PISTON VFM370 ﾛｯﾄﾞ	1	
-	228C0-50461		ROD,PISTON VFM375 ﾛｯﾄﾞ	1	
-	228C0-80471		ROD,PISTON VFM400 ﾛｯﾄﾞ	1	
-	228C0-50471		ROD,PISTON VFM425 ﾛｯﾄﾞ	1	
-	228C0-50481		ROD,PISTON VFM450 ﾛｯﾄﾞ	1	
-	228C0-50491		ROD,PISTON VFM475 ﾛｯﾄﾞ	1	
-	228C0-50501		ROD,PISTON VFM500 ﾛｯﾄﾞ	1	

FIG.191 LIFT CYLINDER (FRONT)[VFM28C](3CYLINDER)

(M4040520) リフトシリンダ

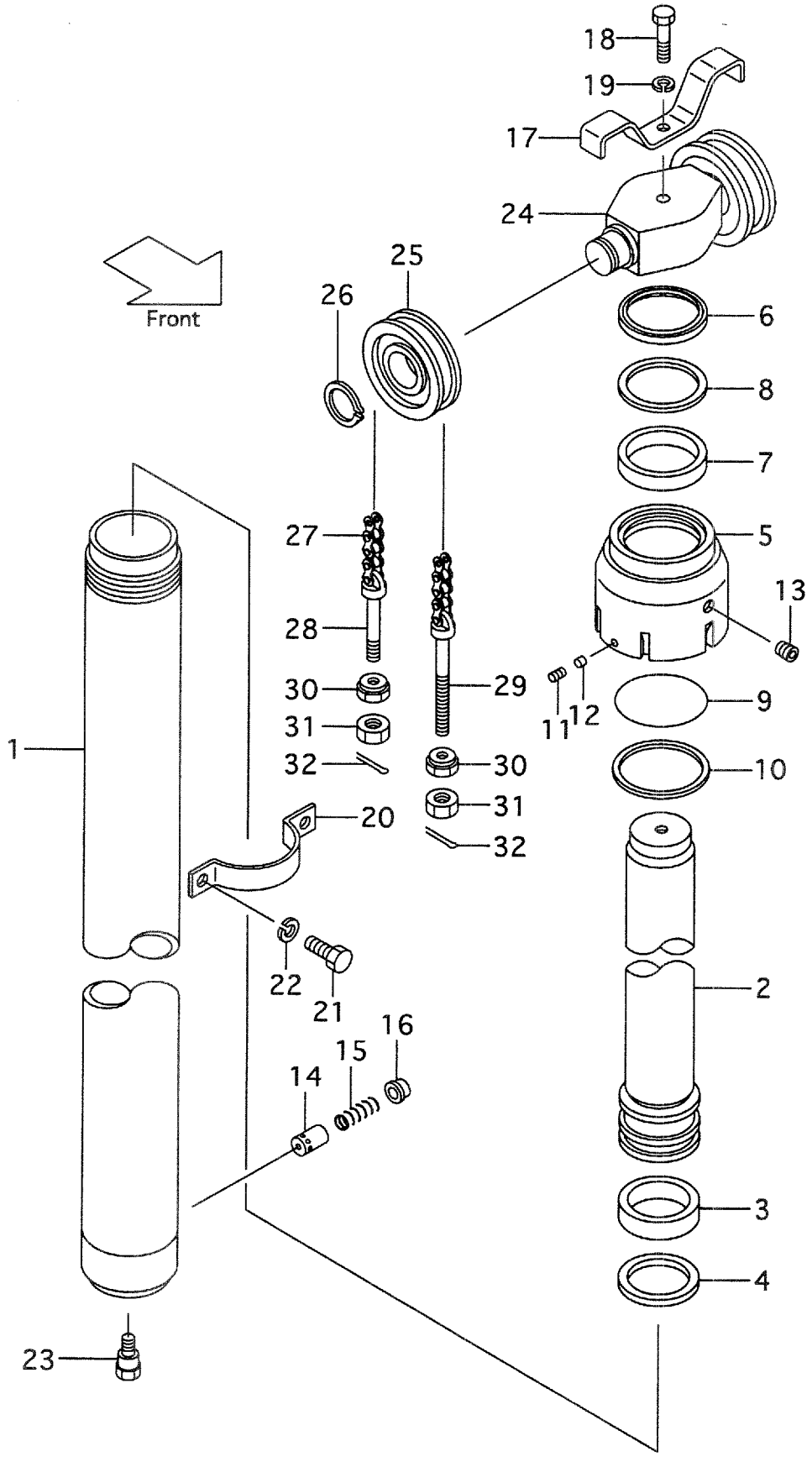

A:VFM28C(FD45,FG45)

Item No	Part No.	Mark	Description		Req'd	Remarks : Serial No.
-	228C0-50511		ROD,PISTON VFM550	ﾛｯﾄﾞ	1	
-	228C0-50521		ROD,PISTON VFM600	ﾛｯﾄﾞ	1	
3	228C0-82431	*	WEARING	ｳｴｱﾘﾝｸﾞ	1	
4	228C0-82441	*	SEAL	ｼｰﾙ	1	
5	228C0-82501		CAP	ｷｬｯﾌﾟ	1	
6	228C0-82531	*	SEAL	ｼｰﾙ	1	
7	228C0-82511	*	PACKING	ﾊﾟｯｷﾝｸﾞ	1	
8	228C0-82521	*	RING	ﾘﾝｸﾞ	1	
9	03350-01400	*	O-RING	Oﾘﾝｸﾞ	1	
10	228C0-82541	*	RING	ﾘﾝｸﾞ	1	
11	25908-44101		PLUG	ﾌﾟﾗｸﾞ	1	
12	25908-44111		PLUG,NYLON	ﾌﾟﾗｸﾞ	1	
13	22518-40151		PLUG	ﾌﾟﾗｸﾞ	1	
14	24389-46011		PISTON	ﾋﾟｽﾄﾝ	1	
15	24389-46021		SPRING	ｽﾌﾟﾘﾝｸﾞ	1	MAST NO.1-116
-	224T0-53451		SPRING	ｽﾌﾟﾘﾝｸﾞ	1	MAST NO.117-
16	24310-82641		RETAINER	ﾘﾃｰﾅ	1	
17	24310-82291		STOPPER	ｽﾄｯﾊﾟ	1	
18	01103-16070		BOLT	ﾎﾞﾙﾄ	1	
19	02011-00016		WASHER	ﾜｯｼｬ	1	
20	228C0-82421		SUPPORT	ｻﾎﾟｰﾄ	1	
21	01184-12025		BOLT & WASHER	ﾎﾞﾙﾄ&ﾜｯｼｬ	2	MAST NO.1-131
-	01103-12025		BOLT	ﾎﾞﾙﾄ	2	MAST NO.132-
22	02011-00012		WASHER	ﾜｯｼｬ	2	
23	224T0-82561		BOLT	ﾎﾞﾙﾄ	1	
A2	224T0-53361		HEAD-ASSY,PISTON	ﾋﾟｽﾄﾝﾍｯﾄﾞｱｯｾﾝ	1	INC.24-26
24	224T0-53371		HEAD,PISTON	ﾍｯﾄﾞ	1	
25	24609-41241		SHEAVE	ｼｰﾌﾞ	2	
26	02100-00050		RING,SNAP	ｽﾅｯﾌﾟﾘﾝｸﾞ	2	
27	23918-45491		CHAIN,LEAF VFM250	ﾁｪｰﾝ	2	
-	23918-45531		CHAIN,LEAF VFM270	ﾁｪｰﾝ	2	
-	23918-45511		CHAIN,LEAF VFM275	ﾁｪｰﾝ	2	
-	23918-45551		CHAIN,LEAF VFM300	ﾁｪｰﾝ	2	
-	23918-45591		CHAIN,LEAF VFM325	ﾁｪｰﾝ	2	
-	23918-45611		CHAIN,LEAF VFM330	ﾁｪｰﾝ	2	
-	23918-45651		CHAIN,LEAF VFM350	ﾁｪｰﾝ	2	
-	23918-45671		CHAIN,LEAF VFM366	ﾁｪｰﾝ	2	
-	23918-45691		CHAIN,LEAF VFM370	ﾁｪｰﾝ	2	
-	23918-45691		CHAIN,LEAF VFM375	ﾁｪｰﾝ	2	
-	23918-45771		CHAIN,LEAF VFM400	ﾁｪｰﾝ	2	
-	23918-45811		CHAIN,LEAF VFM425	ﾁｪｰﾝ	2	
-	23918-45851		CHAIN,LEAF VFM450	ﾁｪｰﾝ	2	
-	23918-45911		CHAIN,LEAF VFM475	ﾁｪｰﾝ	2	
-	23918-45951		CHAIN,LEAF VFM500	ﾁｪｰﾝ	2	
-	23918-46071		CHAIN,LEAF VFM550	ﾁｪｰﾝ	2	
-	23918-46171		CHAIN,LEAF VFM600	ﾁｪｰﾝ	2	
28	24329-45441		PIN	ﾋﾟﾝ	2	
29	23918-42681		PIN	ﾋﾟﾝ	2	
30	23818-30271		NUT	ﾅｯﾄ	4	
31	01402-00022		NUT	ﾅｯﾄ	4	

FIG.191 LIFT CYLINDER (FRONT)[VFM28C](3CYLINDER)

(M4040520) リフトシリンダ

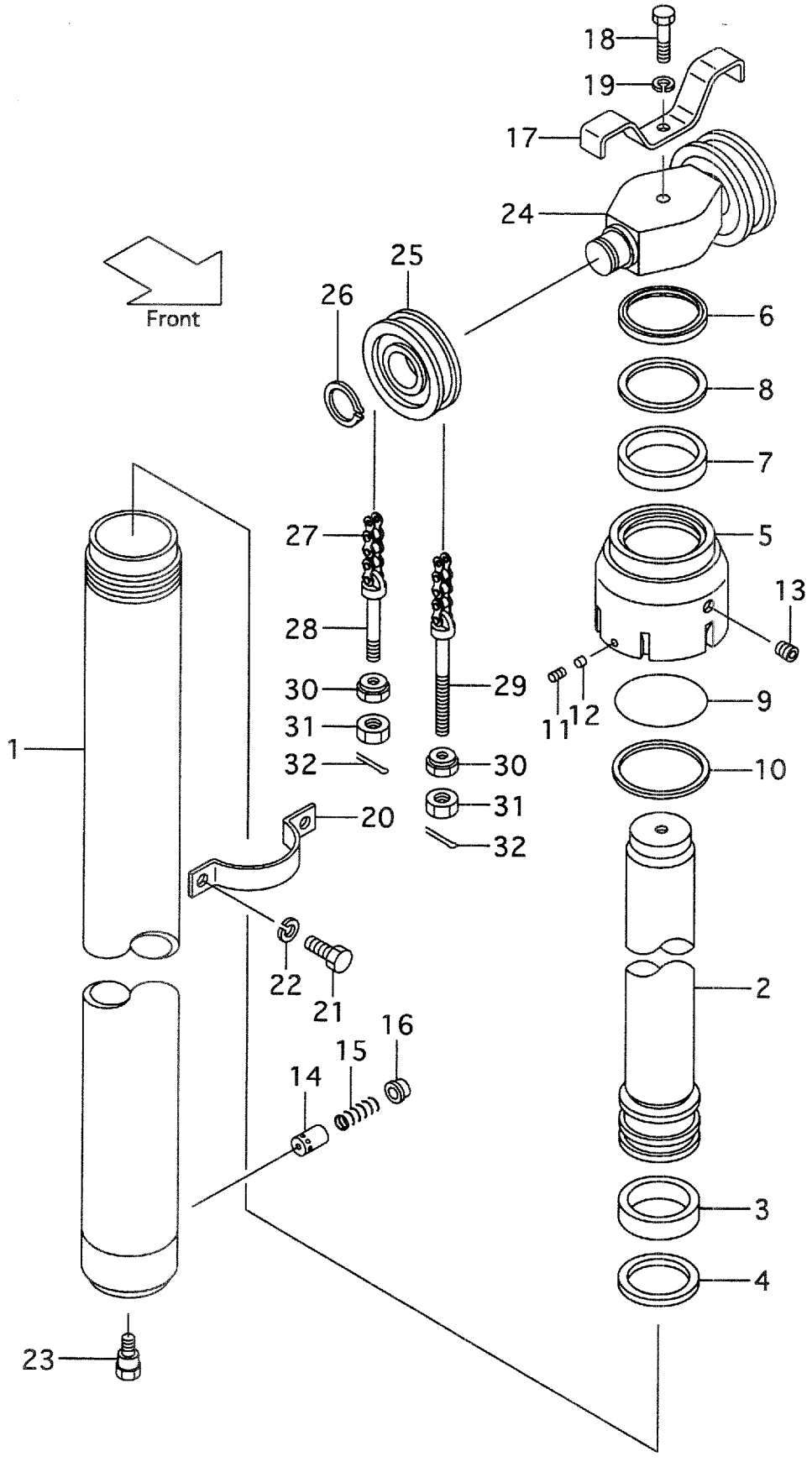

A:VFM28C(FD45,FG45)

Item No	Part No.	Mark	Description	Req'd	Remarks : Serial No.
32	02200-03040		PIN,COTTER ﾋﾟﾝ	4	
K1	228C0-59801		KIT,OVERHAUL ｵｰﾊﾞｰﾎｰﾙｷｯﾄ	1	INC.3,4,6-10

FIG.192 LIFT CYLINDER (REAR)[VFM28C](3CYLINDER)

(M4040540) リフトシリンダ

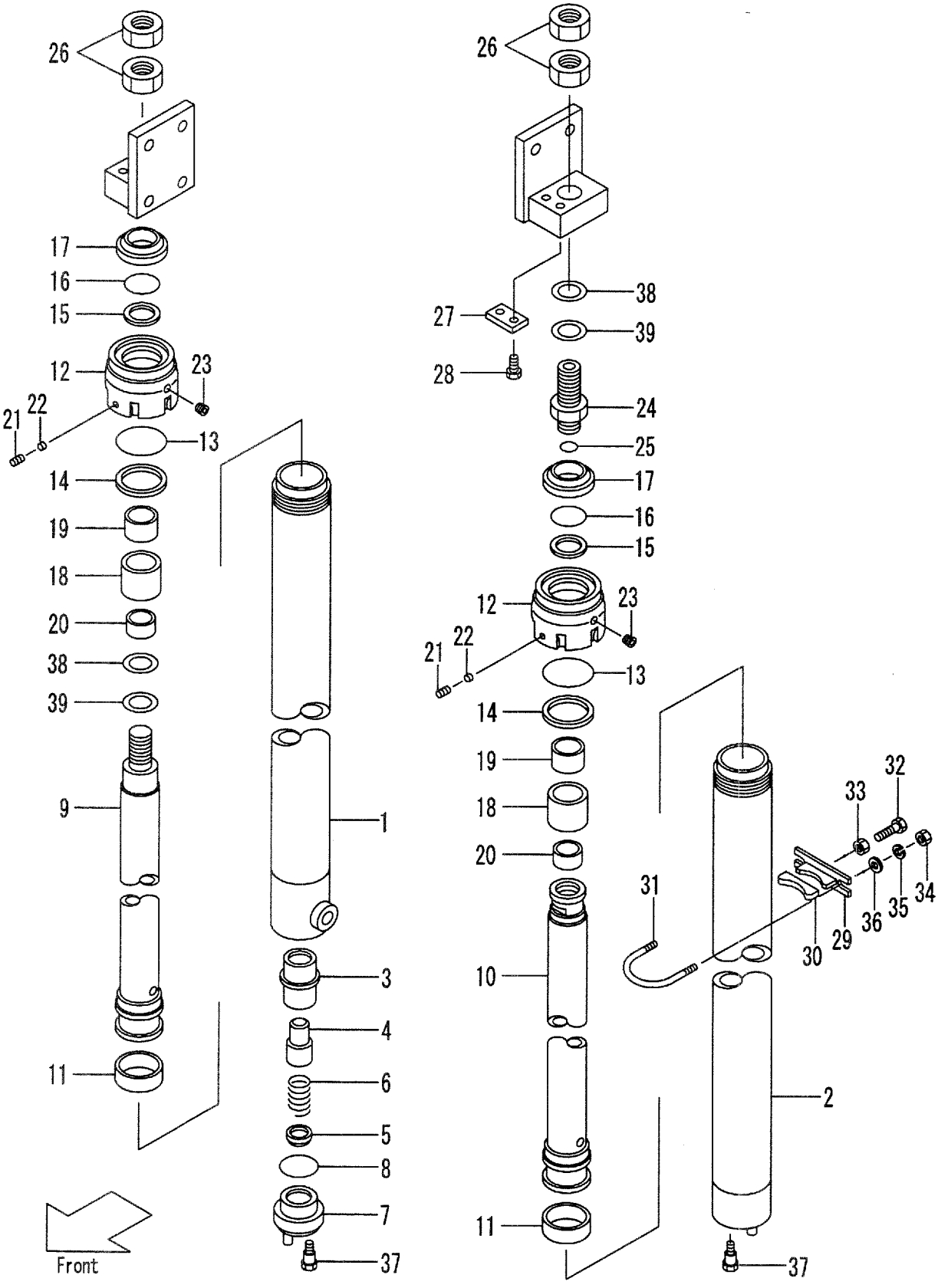

A:VFM28C(FD45,FG45)

Item No	Part No.	Mark	Description	Req'd	Remarks : Serial No.
A1	228C0-50611		CYL-ASSY,LIFT,RH VFM250 ﾘﾌﾄｼﾘﾝﾀﾞｱｯｾﾝ	1	INC.1-23
-	228C0-50621		CYL-ASSY,LIFT,RH VFM270 ﾘﾌﾄｼﾘﾝﾀﾞｱｯｾﾝ	1	INC.1-23
-	228C0-50631		CYL-ASSY,LIFT,RH VFM275 ﾘﾌﾄｼﾘﾝﾀﾞｱｯｾﾝ	1	INC.1-23
-	228C0-50601		CYL-ASSY,LIFT,RH VFM300 ﾘﾌﾄｼﾘﾝﾀﾞｱｯｾﾝ	1	INC.1-23
-	228C0-50641		CYL-ASSY,LIFT,RH VFM325 ﾘﾌﾄｼﾘﾝﾀﾞｱｯｾﾝ	1	INC.1-23
-	228C0-50651		CYL-ASSY,LIFT,RH VFM330 ﾘﾌﾄｼﾘﾝﾀﾞｱｯｾﾝ	1	INC.1-23
-	228C0-50661		CYL-ASSY,LIFT,RH VFM350 ﾘﾌﾄｼﾘﾝﾀﾞｱｯｾﾝ	1	INC.1-23
-	228C0-50671		CYL-ASSY,LIFT,RH VFM366 ﾘﾌﾄｼﾘﾝﾀﾞｱｯｾﾝ	1	INC.1-23
-	228C0-50681		CYL-ASSY,LIFT,RH VFM370 ﾘﾌﾄｼﾘﾝﾀﾞｱｯｾﾝ	1	INC.1-23
-	228C0-50691		CYL-ASSY,LIFT,RH VFM375 ﾘﾌﾄｼﾘﾝﾀﾞｱｯｾﾝ	1	INC.1-23
-	228C0-50701		CYL-ASSY,LIFT,RH VFM400 ﾘﾌﾄｼﾘﾝﾀﾞｱｯｾﾝ	1	INC.1-23
-	228C0-50711		CYL-ASSY,LIFT,RH VFM425 ﾘﾌﾄｼﾘﾝﾀﾞｱｯｾﾝ	1	INC.1-23
-	228C0-50721		CYL-ASSY,LIFT,RH VFM450 ﾘﾌﾄｼﾘﾝﾀﾞｱｯｾﾝ	1	INC.1-23
-	228C0-50731		CYL-ASSY,LIFT,RH VFM475 ﾘﾌﾄｼﾘﾝﾀﾞｱｯｾﾝ	1	INC.1-23
-	228C0-50741		CYL-ASSY,LIFT,RH VFM500 ﾘﾌﾄｼﾘﾝﾀﾞｱｯｾﾝ	1	INC.1-23
-	228C0-50751		CYL-ASSY,LIFT,RH VFM550 ﾘﾌﾄｼﾘﾝﾀﾞｱｯｾﾝ	1	INC.1-23
-	228C0-50761		CYL-ASSY,LIFT,RH VFM600 ﾘﾌﾄｼﾘﾝﾀﾞｱｯｾﾝ	1	INC.1-23
-	228C0-50811		CYL-ASSY,LIFT,LH VFM250 ﾘﾌﾄｼﾘﾝﾀﾞｱｯｾﾝ	1	INC.2-25
-	228C0-50821		CYL-ASSY,LIFT,LH VFM270 ﾘﾌﾄｼﾘﾝﾀﾞｱｯｾﾝ	1	INC.2-25
-	228C0-50831		CYL-ASSY,LIFT,LH VFM275 ﾘﾌﾄｼﾘﾝﾀﾞｱｯｾﾝ	1	INC.2-25
-	228C0-50801		CYL-ASSY,LIFT,LH VFM300 ﾘﾌﾄｼﾘﾝﾀﾞｱｯｾﾝ	1	INC.2-25
-	228C0-50841		CYL-ASSY,LIFT,LH VFM325 ﾘﾌﾄｼﾘﾝﾀﾞｱｯｾﾝ	1	INC.2-25
-	228C0-50851		CYL-ASSY,LIFT,LH VFM330 ﾘﾌﾄｼﾘﾝﾀﾞｱｯｾﾝ	1	INC.2-25
-	228C0-50861		CYL-ASSY,LIFT,LH VFM350 ﾘﾌﾄｼﾘﾝﾀﾞｱｯｾﾝ	1	INC.2-25
-	228C0-50871		CYL-ASSY,LIFT,LH VFM366 ﾘﾌﾄｼﾘﾝﾀﾞｱｯｾﾝ	1	INC.2-25

FIG.192 LIFT CYLINDER (REAR)[VFM28C](3CYLINDER)

(M4040540) リフトシリンダ

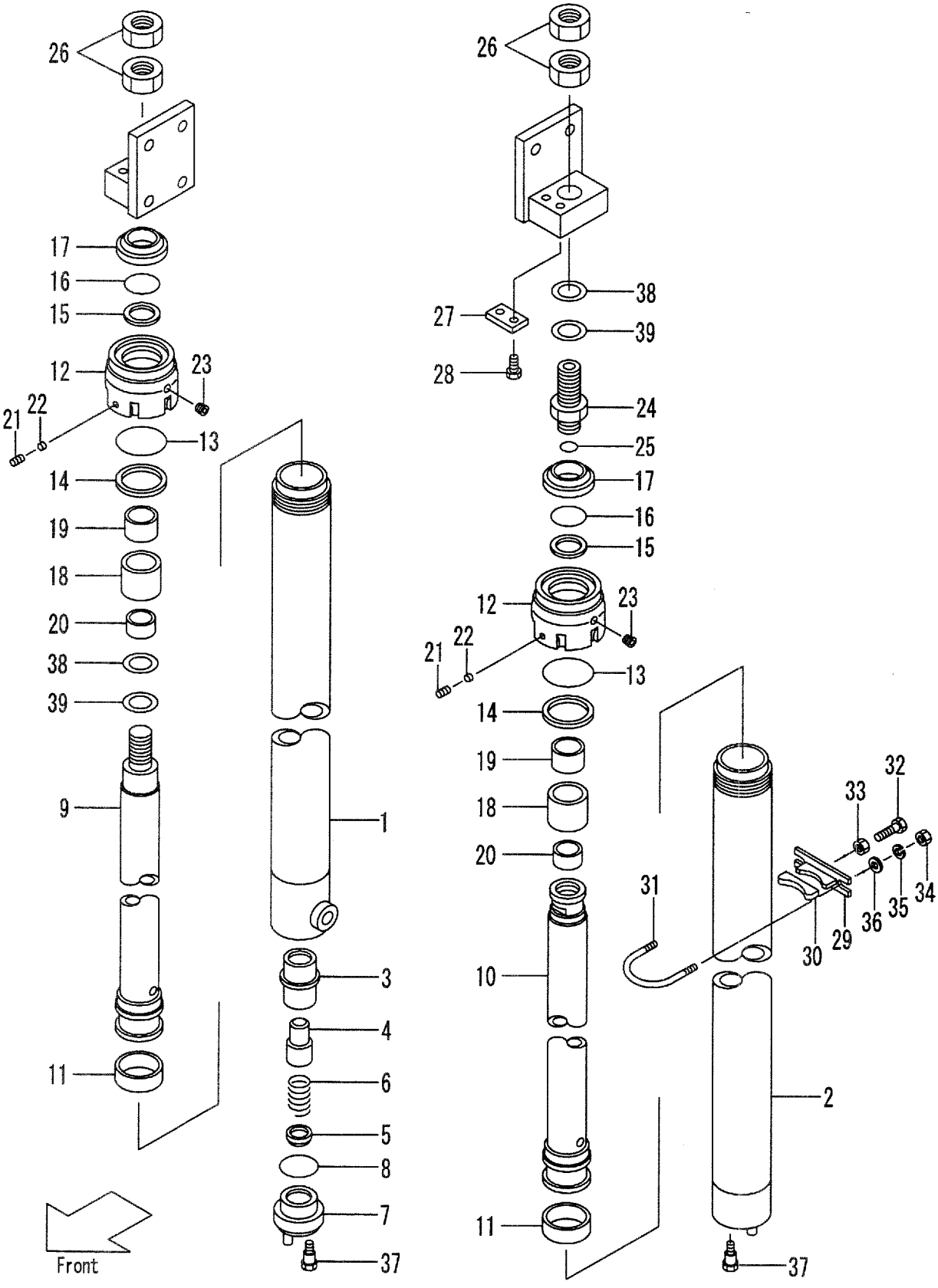

A:VFM28C(FD45,FG45)

Item No	Part No.	Mark	Description	Req'd	Remarks : Serial No.
-	228C0-50881		CYL-ASSY,LIFT,LH VFM370 リフトシリンダアッセン	1	INC.2-25
-	228C0-50891		CYL-ASSY,LIFT,LH VFM375 リフトシリンダアッセン	1	INC.2-25
-	228C0-50901		CYL-ASSY,LIFT,LH VFM400 リフトシリンダアッセン	1	INC.2-25
-	228C0-50911		CYL-ASSY,LIFT,LH VFM425 リフトシリンダアッセン	1	INC.2-25
-	228C0-50921		CYL-ASSY,LIFT,LH VFM450 リフトシリンダアッセン	1	INC.2-25
-	228C0-50931		CYL-ASSY,LIFT,LH VFM475 リフトシリンダアッセン	1	INC.2-25
-	228C0-50941		CYL-ASSY,LIFT,LH VFM500 リフトシリンダアッセン	1	INC.2-25
-	228C0-50951		CYL-ASSY,LIFT,LH VFM550 リフトシリンダアッセン	1	INC.2-25
-	228C0-50961		CYL-ASSY,LIFT,LH VFM600 リフトシリンダアッセン	1	INC.2-25
1	228C0-51011		TUBE,RH VFM250 チューブ	1	
-	228C0-51021		TUBE,RH VFM270 チューブ	1	
-	228C0-51031		TUBE,RH VFM275 チューブ	1	
-	228C0-51001		TUBE,RH VFM300 チューブ	1	
-	228C0-51041		TUBE,RH VFM325 チューブ	1	
-	228C0-51051		TUBE,RH VFM330 チューブ	1	
-	228C0-51061		TUBE,RH VFM350 チューブ	1	
-	228C0-51071		TUBE,RH VFM366 チューブ	1	
-	228C0-51081		TUBE,RH VFM370 チューブ	1	
-	228C0-51091		TUBE,RH VFM375 チューブ	1	
-	228C0-51101		TUBE,RH VFM400 チューブ	1	
-	228C0-51111		TUBE,RH VFM425 チューブ	1	
-	228C0-51121		TUBE,RH VFM450 チューブ	1	
-	228C0-51131		TUBE,RH VFM475 チューブ	1	
-	228C0-51141		TUBE,RH VFM500 チューブ	1	
-	228C0-51151		TUBE,RH VFM550 チューブ	1	
-	228C0-51161		TUBE,RH VFM600 チューブ	1	
2	228C0-51211		TUBE,LH VFM250 チューブ	1	
-	228C0-51221		TUBE,LH VFM270 チューブ	1	
-	228C0-51231		TUBE,LH VFM275 チューブ	1	
-	228C0-51201		TUBE,LH VFM300 チューブ	1	
-	228C0-51241		TUBE,LH VFM325 チューブ	1	
-	228C0-51251		TUBE,LH VFM330 チューブ	1	
-	228C0-51261		TUBE,LH VFM350 チューブ	1	
-	228C0-51271		TUBE,LH VFM366 チューブ	1	
-	228C0-51281		TUBE,LH VFM370 チューブ	1	
-	228C0-51291		TUBE,LH VFM375 チューブ	1	
-	228C0-51301		TUBE,LH VFM400 チューブ	1	
-	228C0-51311		TUBE,LH VFM425 チューブ	1	
-	228C0-51321		TUBE,LH VFM450 チューブ	1	
-	228C0-51331		TUBE,LH VFM475 チューブ	1	
-	228C0-51341		TUBE,LH VFM500 チューブ	1	

FIG.192 LIFT CYLINDER (REAR)[VFM28C](3CYLINDER)

(M4040540) リフトシリンダ

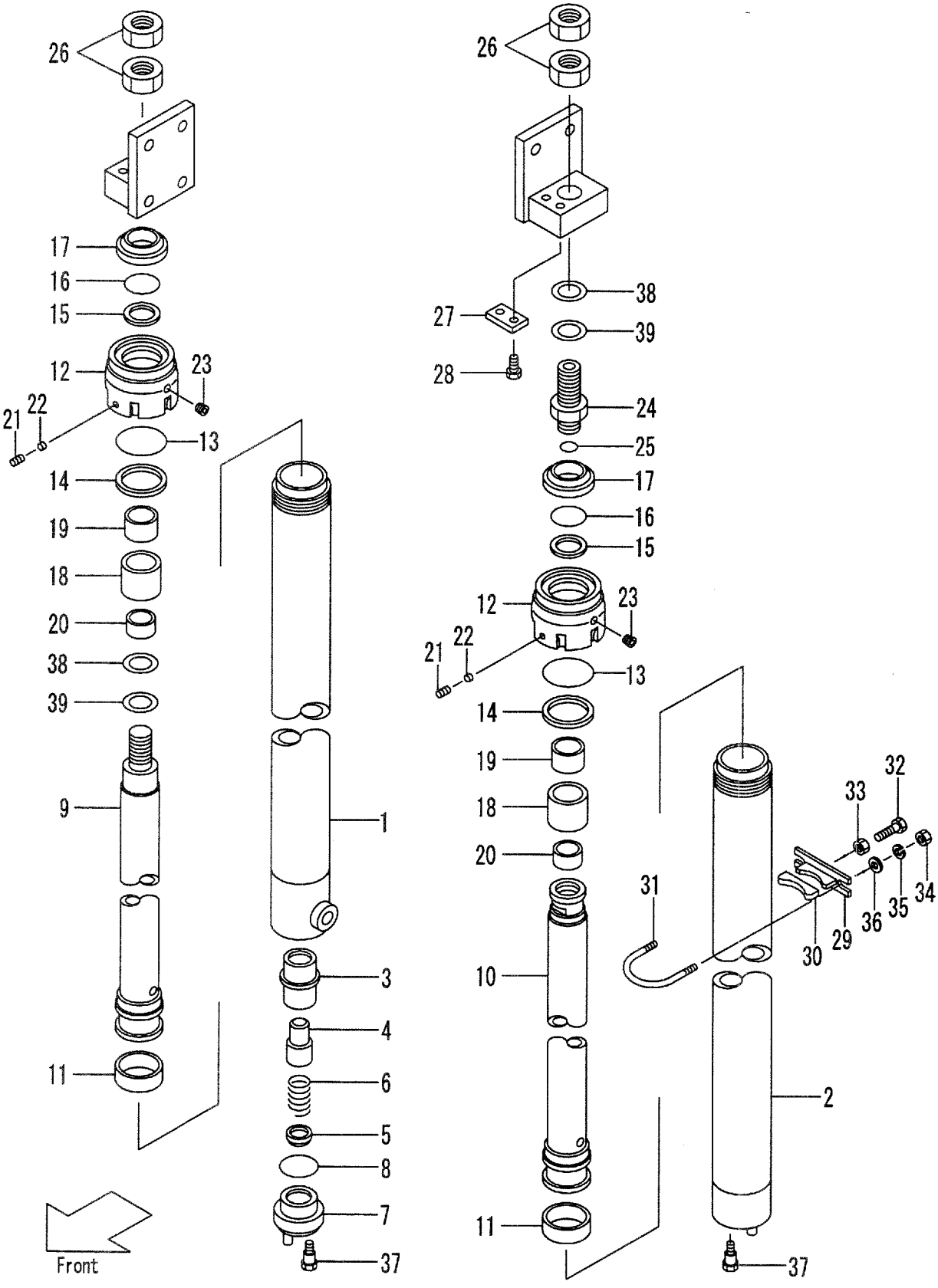

A:VFM28C(FD45,FG45)

Item No	Part No.	Mark	Description		Req'd	Remarks : Serial No.
-	228C0-51351		TUBE,LH VFM550	ﾁｭｰﾌﾞ	1	
-	228C0-51361		TUBE,LH VFM600	ﾁｭｰﾌﾞ	1	
3	53658-43021		SLEEVE	ｽﾘｰﾌﾞ	1	(RH)
4	53658-43011		PISTON	ﾋﾟｽﾄﾝ	1	(RH)
5	53658-43001		CHECK	ﾁｪｯｸ	1	(RH)
6	53658-43031		SPRING	ｽﾌﾟﾘﾝｸﾞ	1	(RH)
7	54238-43051		PLUG	ﾌﾟﾗｸﾞ	1	(RH)
8	03320-00340	*	O-RING	Oﾘﾝｸﾞ	1	(RH)
9	228C0-51411		ROD,PISTON,RH VFM250	ﾛｯﾄﾞ	1	
-	228C0-51421		ROD,PISTON,RH VFM270	ﾛｯﾄﾞ	1	
-	228C0-51431		ROD,PISTON,RH VFM275	ﾛｯﾄﾞ	1	
-	228C0-51401		ROD,PISTON,RH VFM300	ﾛｯﾄﾞ	1	
-	228C0-51441		ROD,PISTON,RH VFM325	ﾛｯﾄﾞ	1	
-	228C0-51451		ROD,PISTON,RH VFM330	ﾛｯﾄﾞ	1	
-	228C0-51461		ROD,PISTON,RH VFM350	ﾛｯﾄﾞ	1	
-	228C0-51471		ROD,PISTON,RH VFM366	ﾛｯﾄﾞ	1	
-	228C0-51481		ROD,PISTON,RH VFM370	ﾛｯﾄﾞ	1	
-	228C0-51491		ROD,PISTON,RH VFM375	ﾛｯﾄﾞ	1	
-	228C0-51501		ROD,PISTON,RH VFM400	ﾛｯﾄﾞ	1	
-	228C0-51511		ROD,PISTON,RH VFM425	ﾛｯﾄﾞ	1	
-	228C0-51521		ROD,PISTON,RH VFM450	ﾛｯﾄﾞ	1	
-	228C0-51531		ROD,PISTON,RH VFM475	ﾛｯﾄﾞ	1	
-	228C0-51541		ROD,PISTON,RH VFM500	ﾛｯﾄﾞ	1	
-	228C0-51551		ROD,PISTON,RH VFM550	ﾛｯﾄﾞ	1	
-	228C0-51561		ROD,PISTON,RH VFM600	ﾛｯﾄﾞ	1	
10	228C0-51611		ROD,PISTON,LH VFM250	ﾛｯﾄﾞ	1	
-	228C0-51621		ROD,PISTON,LH VFM270	ﾛｯﾄﾞ	1	
-	228C0-51631		ROD,PISTON,LH VFM275	ﾛｯﾄﾞ	1	
-	228C0-51601		ROD,PISTON,LH VFM300	ﾛｯﾄﾞ	1	
-	228C0-51641		ROD,PISTON,LH VFM325	ﾛｯﾄﾞ	1	
-	228C0-51651		ROD,PISTON,LH VFM330	ﾛｯﾄﾞ	1	
-	228C0-51661		ROD,PISTON,LH VFM350	ﾛｯﾄﾞ	1	
-	228C0-51671		ROD,PISTON,LH VFM366	ﾛｯﾄﾞ	1	
-	228C0-51681		ROD,PISTON,LH VFM370	ﾛｯﾄﾞ	1	
-	228C0-51691		ROD,PISTON,LH VFM375	ﾛｯﾄﾞ	1	
-	228C0-51701		ROD,PISTON,LH VFM400	ﾛｯﾄﾞ	1	
-	228C0-51711		ROD,PISTON,LH VFM425	ﾛｯﾄﾞ	1	
-	228C0-51721		ROD,PISTON,LH VFM450	ﾛｯﾄﾞ	1	
-	228C0-51731		ROD,PISTON,LH VFM475	ﾛｯﾄﾞ	1	
-	228C0-51741		ROD,PISTON,LH VFM500	ﾛｯﾄﾞ	1	
-	228C0-51751		ROD,PISTON,LH VFM550	ﾛｯﾄﾞ	1	
-	228C0-51761		ROD,PISTON,LH VFM600	ﾛｯﾄﾞ	1	
11	23460-53181		WEARING	ｳｴｱﾘﾝｸﾞ	2	
12	228C0-53011		CAP,CYL	ｷｬｯﾌﾟ	2	
13	03350-00650		O-RING	Oﾘﾝｸﾞ	2	
14	228C0-53021		RING,BACK-UP	ﾘﾝｸﾞ	2	
15	97103-35431		U-PACKING	Uﾊﾟｯｷﾝｸﾞ	2	
16	22658-52301		RING,BACK-UP	ﾘﾝｸﾞ	2	
17	224T8-46001		SEAL,DUST	ｼｰﾙ	2	
A2	228C0-53301		SLEEVE-ASSY	ｽﾘｰﾌﾞｱｯｾﾝ	2	INC.18,19

FIG.192 LIFT CYLINDER (REAR)[VFM28C](3CYLINDER)

(M4040540) リフトシリンダ

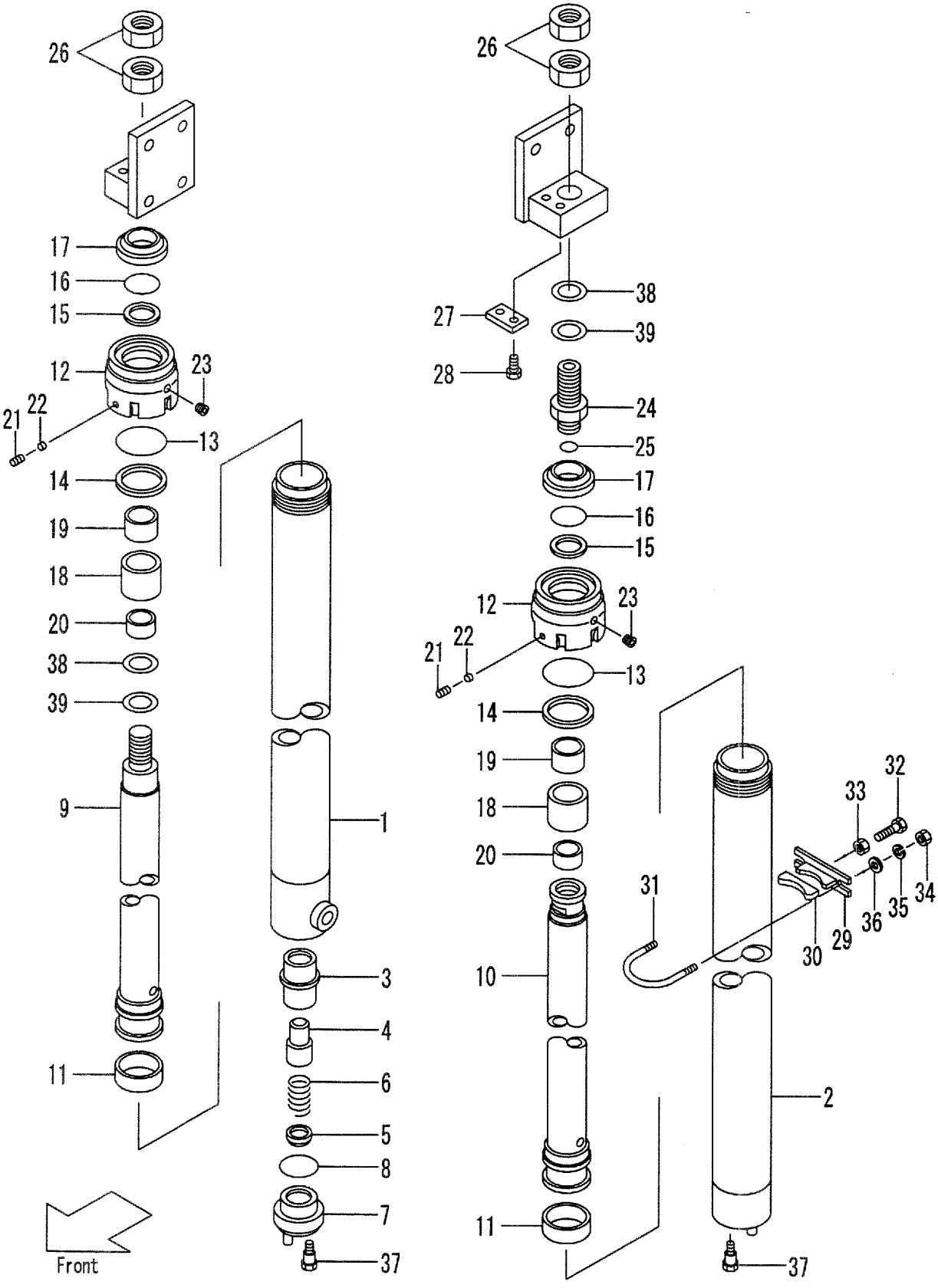

A:VFM28C(FD45,FG45)

Item No	Part No.	Mark	Description		Req'd	Remarks : Serial No.
18	228C0-53311		SLEEVE	ｽﾘｰﾌﾞ	2	
19	23460-53171		BUSHING	ﾌﾞｯｼﾝｸﾞ	2	
20	228C0-53401		SPACER	ｽﾍﾟｰｻ	2	(VFM400-600)
21	25908-44101		PLUG	ﾌﾟﾗｸﾞ	2	
22	25908-44111		PLUG,NYLON	ﾌﾟﾗｸﾞ	2	
23	23870-52871		PLUG	ﾌﾟﾗｸﾞ	4	
24	224T0-53301		NIPPLE	ﾆｯﾌﾟﾙ	1	(LH)
25	03320-00240		O-RING	Oﾘﾝｸﾞ	1	(LH)
26	224T0-53311		NUT	ﾅｯﾄ	4	
27	23648-50161		PLATE,KEY	ﾌﾟﾚｰﾄ	1	(LH)
28	01184-10020		BOLT & WASHER	ﾎﾞﾙﾄ&ﾜｯｼｬ	2	(LH)
29	224T8-42711		SUPPORT	ｻﾎﾟｰﾄ	2	
30	214A8-42631		RUBBER	ﾗﾊﾞｰ	2	
31	224T8-42701		U-BOLT	Uﾎﾞﾙﾄ	2	
32	01120-16040		BOLT	ﾎﾞﾙﾄ	2	
33	01402-00016		NUT	ﾅｯﾄ	2	
34	01400-00010		NUT	ﾅｯﾄ	4	
35	02010-00010		WASHER	ﾜｯｼｬ	4	
36	02000-00010		WASHER	ﾜｯｼｬ	4	
37	214A0-82831		BOLT	ﾎﾞﾙﾄ	2	
38	211F8-22261		SHIM,T-0.5	ｼﾑ	5	
39	211F8-22271		SHIM,T-1.0	ｼﾑ	5	
K1	224C0-59811		KIT,OVERHAUL	ｵｰﾊﾞﾎｰﾙｷｯﾄ	2	INC.8,11,13-17,25

FIG.193 MAST PIPING [VFM28C](3CYLINDER)

(M4040560) マストパイピング

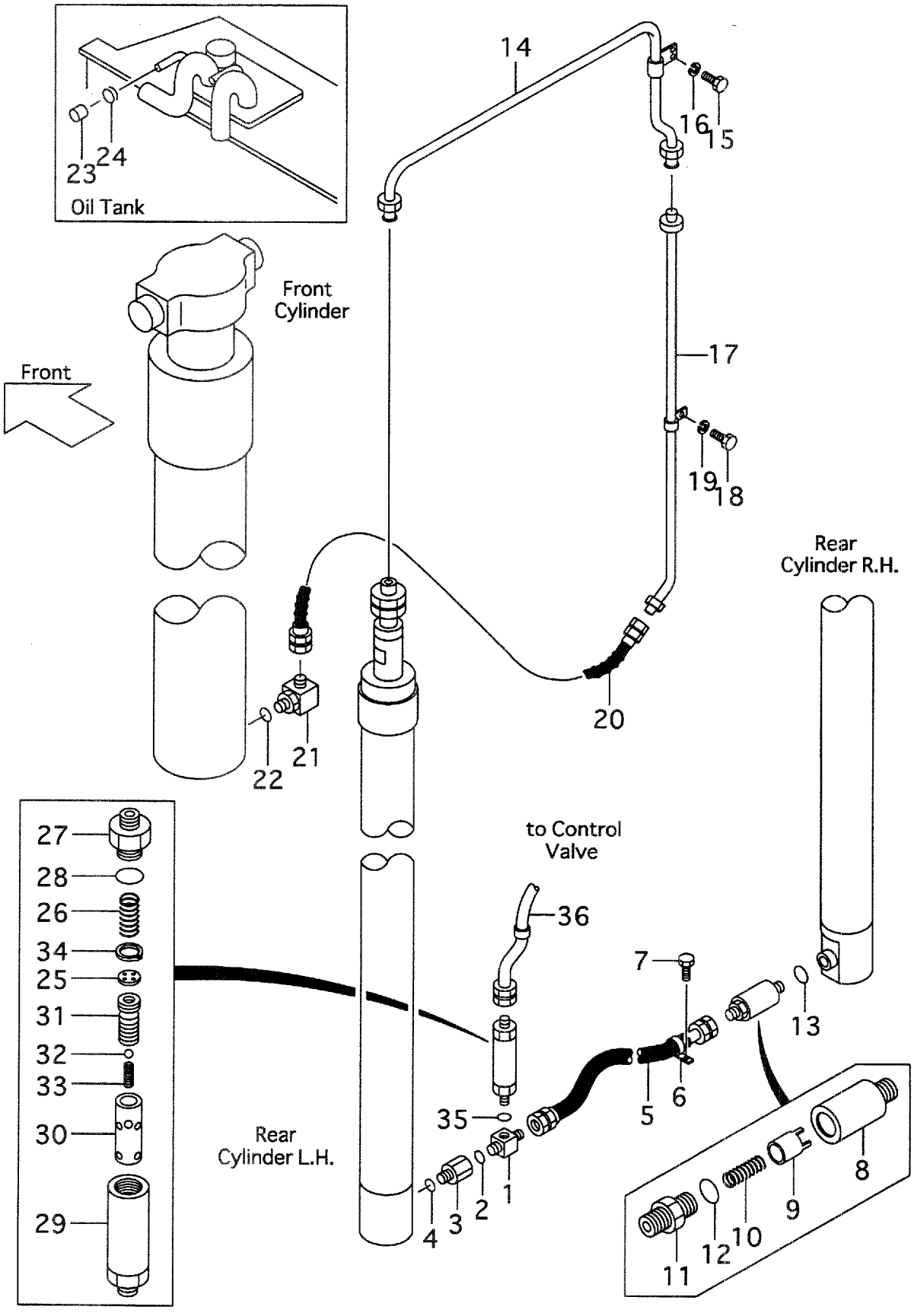

A:VFM28C(FD45,FG45)

Item No	Part No.	Mark	Description		Req'd	Remarks : Serial No.
A1	24609-43682		THREE-WAY-ASSY	ｽﾘｰｳｪｲｱｯｾﾝ	1	INC.1,2
1	NO PART NO.	#	THREE-WAY	ｽﾘｰｳｴｲ	1	
2	03320-00180		O-RING	Oﾘﾝｸﾞ	1	
A2	224T0-91011		NIPPLE-ASSY	ﾆｯﾌﾟﾙｱｯｾﾝ	1	INC.3,4
3	NO PART NO.	#	NIPPLE	ﾆｯﾌﾟﾙ	1	
4	03320-00180		O-RING	Oﾘﾝｸﾞ	1	
5	224T8-42861		HOSE,HP	ﾎｰｽ	1	
6	214A8-43081		CLIP	ｸﾘｯﾌﾟ	1	
7	01184-10020		BOLT	ﾎﾞﾙﾄ	1	
A3	24320-60601		VALVE-ASSY,CUT	ｶｯﾄﾊﾞﾙﾌﾞｱｯｾﾝ	1	INC.8-12
8	NO PART NO.	#	CASE	ｹｰｽ	1	
9	NO PART NO.	#	PISTON	ﾋﾟｽﾄﾝ	1	
10	24230-52701		SPRING	ｽﾌﾟﾘﾝｸﾞ	1	
A4	24320-58581		NIPPLE-ASSY	ﾆｯﾌﾟﾙｱｯｾﾝ	1	INC.11,12
11	NO PART NO.	#	NIPPLE	ﾆｯﾌﾟﾙ	1	
12	03320-00180		O-RING	Oﾘﾝｸﾞ	1	
13	03320-00180		O-RING	Oﾘﾝｸﾞ	1	
14	224T0-62201		PIPE	ﾊﾟｲﾌﾟ	1	
15	01100-08018		BOLT	ﾎﾞﾙﾄ	1	
16	02010-00008		WASHER	ﾜｯｼｬ	1	
17	224T0-60111		PIPE VFM250	ﾊﾟｲﾌﾟ	1	
-	224T0-60121		PIPE VFM270	ﾊﾟｲﾌﾟ	1	
-	224T0-60131		PIPE VFM275	ﾊﾟｲﾌﾟ	1	
-	224T0-60101		PIPE VFM300	ﾊﾟｲﾌﾟ	1	
-	224T0-60141		PIPE VFM325	ﾊﾟｲﾌﾟ	1	
-	224T0-60151		PIPE VFM330	ﾊﾟｲﾌﾟ	1	
-	224T0-60161		PIPE VFM350	ﾊﾟｲﾌﾟ	1	
-	224T0-60171		PIPE VFM366	ﾊﾟｲﾌﾟ	1	
-	224T0-60181		PIPE VFM370	ﾊﾟｲﾌﾟ	1	
-	224T0-60191		PIPE VFM375	ﾊﾟｲﾌﾟ	1	
-	224T0-60201		PIPE VFM400	ﾊﾟｲﾌﾟ	1	
-	224T0-60211		PIPE VFM425	ﾊﾟｲﾌﾟ	1	
-	224T0-60221		PIPE VFM450	ﾊﾟｲﾌﾟ	1	
-	224T0-60231		PIPE VFM475	ﾊﾟｲﾌﾟ	1	
-	224T0-60241		PIPE VFM500	ﾊﾟｲﾌﾟ	1	
-	224T0-60251		PIPE VFM550	ﾊﾟｲﾌﾟ	1	
-	224T0-60261		PIPE VFM600	ﾊﾟｲﾌﾟ	1	
18	01100-08018		BOLT	ﾎﾞﾙﾄ	1	(VFM250-375)
-	01100-08018		BOLT	ﾎﾞﾙﾄ	2	(VFM400-500)
-	01100-08018		BOLT	ﾎﾞﾙﾄ	3	(VFM550-600)
19	02010-00008		WASHER	ﾜｯｼｬ	1	(VFM250-375)
-	02010-00008		WASHER	ﾜｯｼｬ	2	(VFM400-500)
-	02010-00008		WASHER	ﾜｯｼｬ	3	(VFM550-600)
20	228C0-62501		HOSE,HP	ﾎｰｽ	1	
A5	24320-58521		ELBOW-ASSY	ｴﾙﾎﾞｱｯｾﾝ	1	INC.21,22
21	24310-92571		ELBOW	ｴﾙﾎﾞ	1	
22	03320-00240		O-RING	Oﾘﾝｸﾞ	1	
23	24356-13011		CAP	ｷｬｯﾌﾟ	1	
24	04911-00032		CLIP	ｸﾘｯﾌﾟ	1	
A6	228C8-41002		REGULATOR-ASSY,FLOW	ﾚｷﾞｭﾚｰﾀｱｯｾﾝ	1	INC.25-34

FIG.193 MAST PIPING [VFM28C](3CYLINDER)

(M4040560) マストパイピング

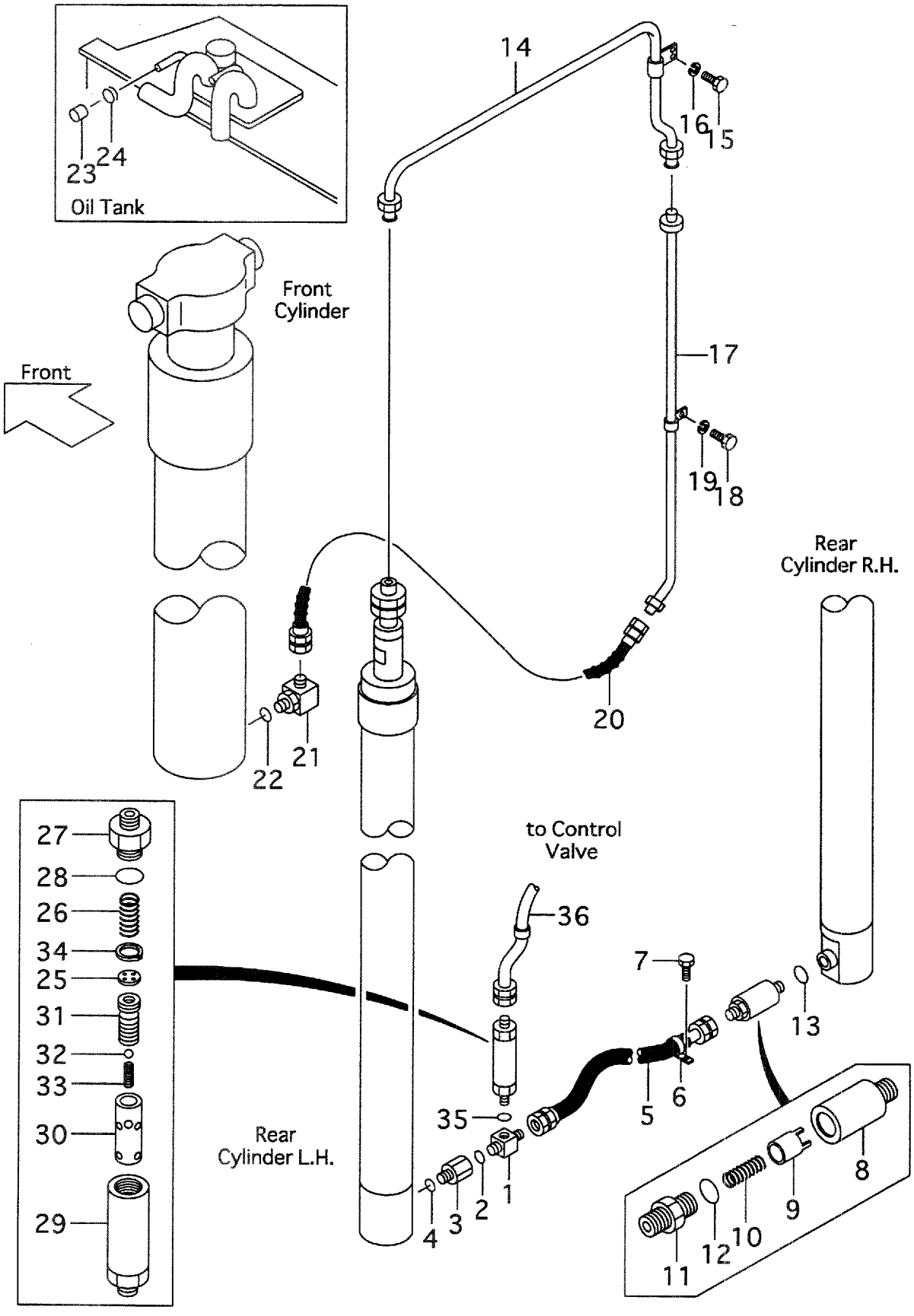

A:VFM28C(FD45,FG45)

Item No	Part No.	Mark	Description		Req'd	Remarks : Serial No.
25	NO PART NO.	#	PLATE	ﾌﾟﾚｰﾄ	1	
26	24609-43631		SPRING	ｽﾌﾟﾘﾝｸﾞ	2	
27	NO PART NO.	#	NIPPLE	ﾆｯﾌﾟﾙ	1	
28	03300-00360		O-RING	Oﾘﾝｸﾞ	1	(OLD PART)
-	03320-00360		O-RING	Oﾘﾝｸﾞ	1	(NEW PART)
29	NO PART NO.	#	CASE	ｹｰｽ	1	
30	NO PART NO.	#	SLEEVE	ｽﾘｰﾌﾞ	1	
31	NO PART NO.	#	PISTON	ﾋﾟｽﾄﾝ	1	
32	24459-42951		BALL	ﾎﾞｰﾙ	1	
33	214A8-44151		SPRING	ｽﾌﾟﾘﾝｸﾞ	1	
34	02110-00020		RING,SNAP	ｽﾅｯﾌﾟﾘﾝｸﾞ	1	
35	03320-00240		O-RING	Oﾘﾝｸﾞ	1	
36	224T8-02101		HOSE,HP	ﾎｰｽ	1	

FIG.194 FORK & LIFT BRACKET [VFM28E](4CYLINDER)

(M4040650) フォーク&リフトブラケット

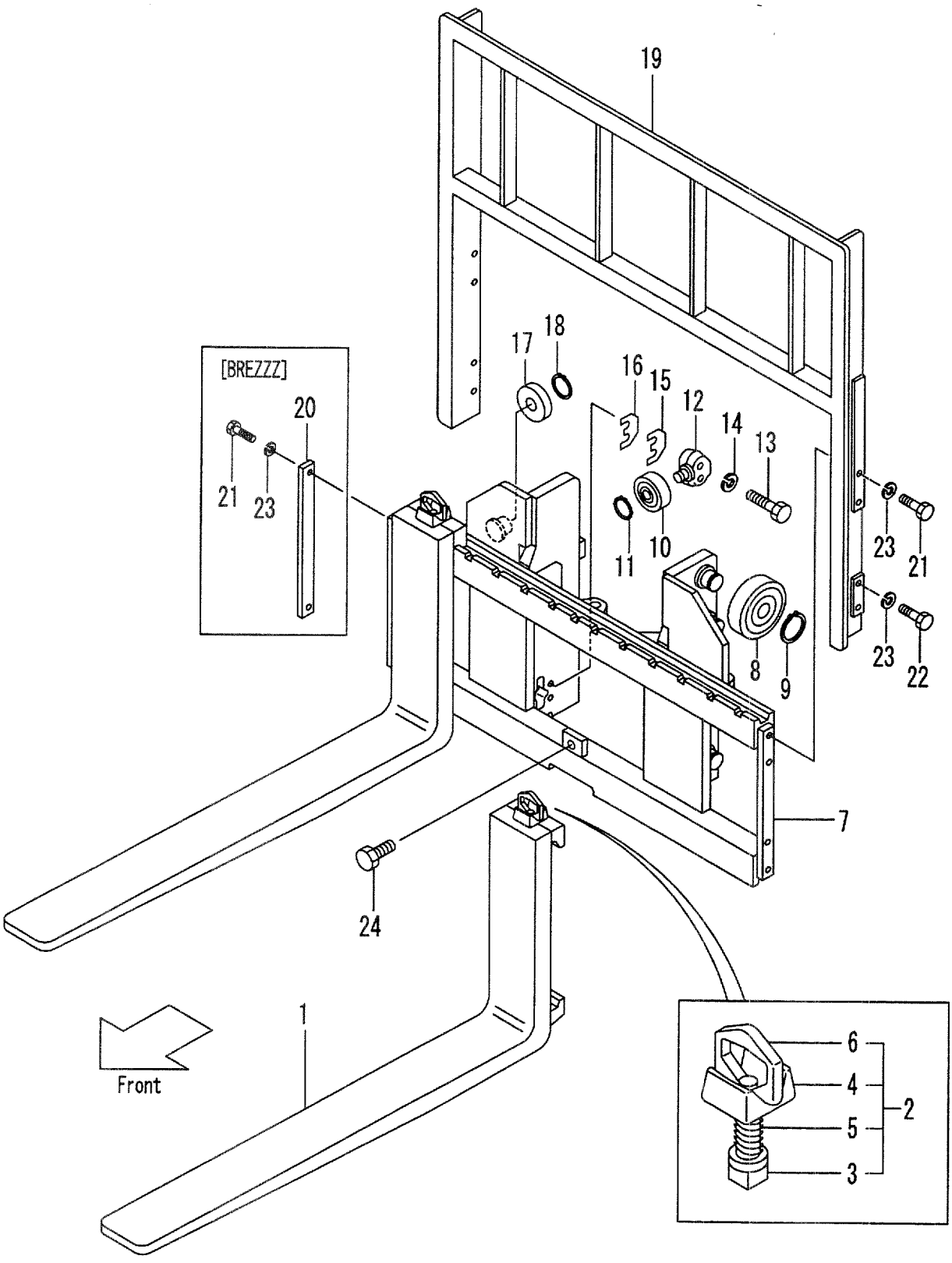

A:VFM28E(FD45,FG45)

Item No	Part No.	Mark	Description		Req'd	Remarks : Serial No.
1	228A8-10614		FORK	ﾌｫｰｸ	2	(L=1070) INC.3-6
-	228A8-10604		FORK	ﾌｫｰｸ	2	[LF100] INC.3-6
-	228A8-10614		FORK	ﾌｫｰｸ	2	[LF107] INC.3-6
-	228A8-10624		FORK	ﾌｫｰｸ	2	[LF110] INC.3-6
-	228A8-10634		FORK	ﾌｫｰｸ	2	[LF120] INC.3-6
-	228A8-10644		FORK	ﾌｫｰｸ	2	[LF122] INC.3-6
-	228A8-10744		FORK	ﾌｫｰｸ	2	[LF130] INC.3-6
-	228A8-10654		FORK	ﾌｫｰｸ	2	[LF137] INC.3-6
-	228A8-10754		FORK	ﾌｫｰｸ	2	[LF140] INC.3-6
-	228A8-10764		FORK	ﾌｫｰｸ	2	[LF150] INC.3-6
-	228A8-10664		FORK	ﾌｫｰｸ	2	[LF152] INC.3-6
-	228A8-10774		FORK	ﾌｫｰｸ	2	[LF160] INC.3-6
-	228A8-10674		FORK	ﾌｫｰｸ	2	[LF167] INC.3-6
-	228A8-10784		FORK	ﾌｫｰｸ	2	[LF170] INC.3-6
-	228A8-10794		FORK	ﾌｫｰｸ	2	[LF180] INC.3-6
-	228A8-10684		FORK	ﾌｫｰｸ	2	[LF182] INC.3-6
-	228A8-10804		FORK	ﾌｫｰｸ	2	[LF190] INC.3-6
-	228A8-10694		FORK	ﾌｫｰｸ	2	[LF197] INC.3-6
-	228A8-10814		FORK	ﾌｫｰｸ	2	[LF200] INC.3-6
-	228A8-10824		FORK	ﾌｫｰｸ	2	[LF210] INC.3-6
-	228A8-10704		FORK	ﾌｫｰｸ	2	[LF212] INC.3-6
-	228A8-10714		FORK	ﾌｫｰｸ	2	[LF220] INC.3-6
-	228A8-10724		FORK	ﾌｫｰｸ	2	[LF227] INC.3-6
-	228A8-10734		FORK	ﾌｫｰｸ	2	[LF230] INC.3-6
2	214J8-11001		STOPPER,FORK	ｽﾄｯﾊﾟ	2	MAST NO.1 INC.3-6
-	214J8-11002		STOPPER,FORK	ｽﾄｯﾊﾟ	2	MAST NO.2-
3	NO PART NO.	#	STOPPER	ｽﾄｯﾊﾟ	2	MAST NO.1
4	214J8-12001		HEAD	ﾍｯﾄﾞ	2	MAST NO.1
5	214J8-12031		SPRING	ｽﾌﾟﾘﾝｸﾞ	2	MAST NO.1
6	214A8-12021		HANDLE	ﾊﾝﾄﾞﾙ	2	MAST NO.1
7	224X0-60002		BRACKET,LIFT	ﾌﾞﾗｹｯﾄ	1	
8	23818-20701		ROLLER,END,143.5	ﾛｰﾗ	6	
-	23958-22081		ROLLER,END,144.0	ﾛｰﾗ	(6)	
9	02100-00050		RING,SNAP	ｽﾅｯﾌﾟﾘﾝｸﾞ	6	
A1	24319-40152		ROLLER-ASSY,SIDE	ｻｲﾄﾞﾛｰﾗｱｯｾﾝ	2	INC.10-12
10	22198-22341		ROLLER,END,91.5	ﾛｰﾗ	2	
11	02100-00030		RING,SNAP	ｽﾅｯﾌﾟﾘﾝｸﾞ	2	
12	24609-42131		SHAFT	ｼｬﾌﾄ	2	
13	01103-16065		BOLT	ﾎﾞﾙﾄ	4	
14	02011-00016		WASHER	ﾜｯｼｬ	4	
15	24609-42151		SHIM,T-1.0	ｼﾑ	8	
16	24609-42161		SHIM,T-0.2	ｼﾑ	8	
17	22198-22341		ROLLER,END,91.5	ﾛｰﾗ	2	
18	02100-00030		RING,SNAP	ｽﾅｯﾌﾟﾘﾝｸﾞ	2	
19	224T8-22301		BACKREST	ﾊﾞｯｸﾚｽﾄ	1	
20	24450-92021		PLATE	ﾌﾟﾚｰﾄ	2	[BREZZZ]
21	01100-14030		BOLT	ﾎﾞﾙﾄ	4	
-	01100-14030		BOLT	ﾎﾞﾙﾄ	4	[BREZZZ]

FIG.194 FORK & LIFT BRACKET [VFM28E](4CYLINDER)

(M4040650) フォーク&リフトブラケット

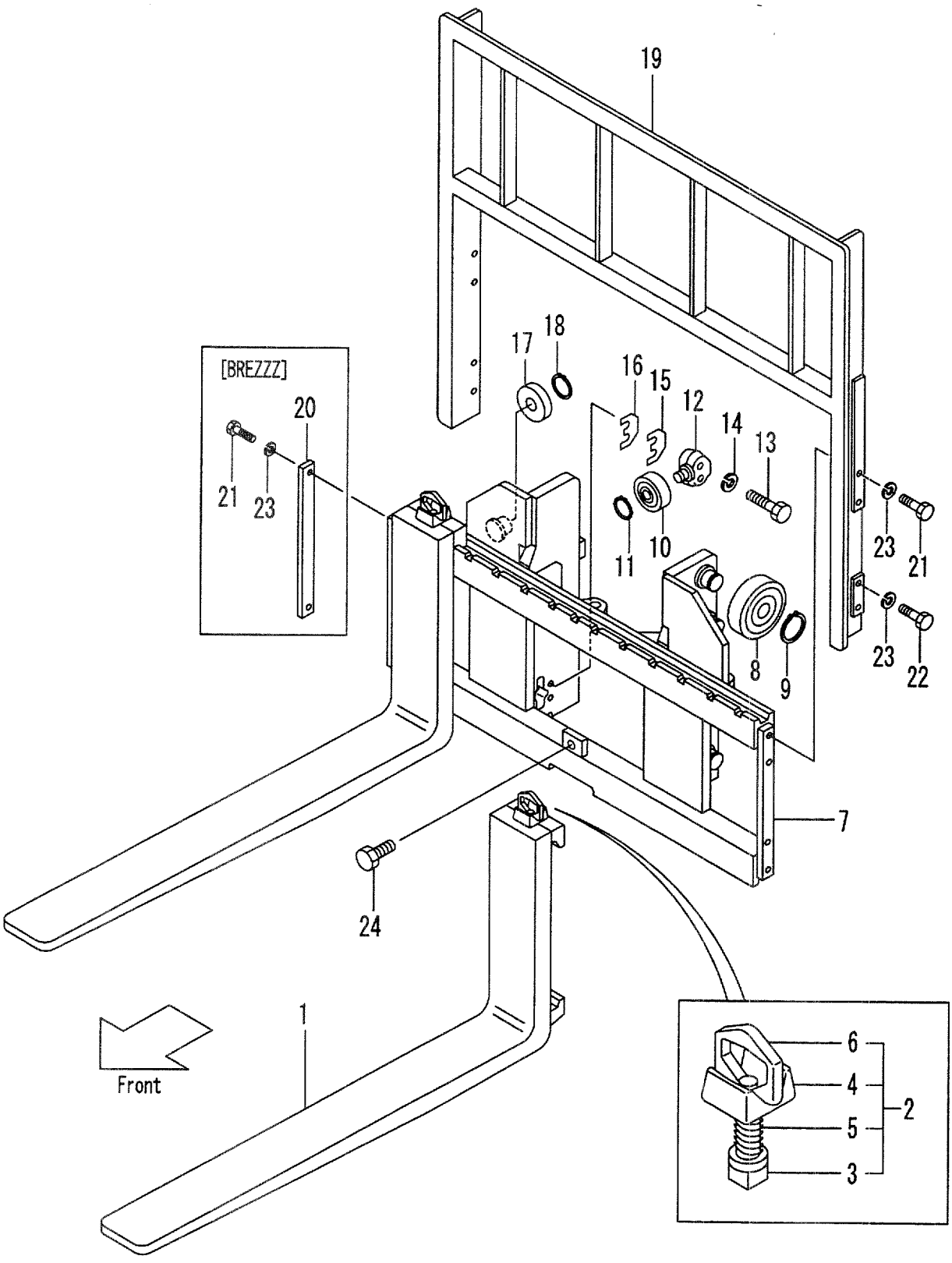

A:VFM28E(FD45,FG45)

Item No	Part No.	Mark	Description		Req'd	Remarks : Serial No.
22	01100-14025		BOLT	ﾎﾞﾙﾄ	4	
23	02010-00014		WASHER	ﾜｯｼｬ	8	
-	02010-00014		WASHER	ﾜｯｼｬ	4	[BREZZZ]
24	01184-12025		BOLT	ﾎﾞﾙﾄ	1	

FIG.195 MAST [VFM28E](4CYLINDER)

(M4040450) マスト

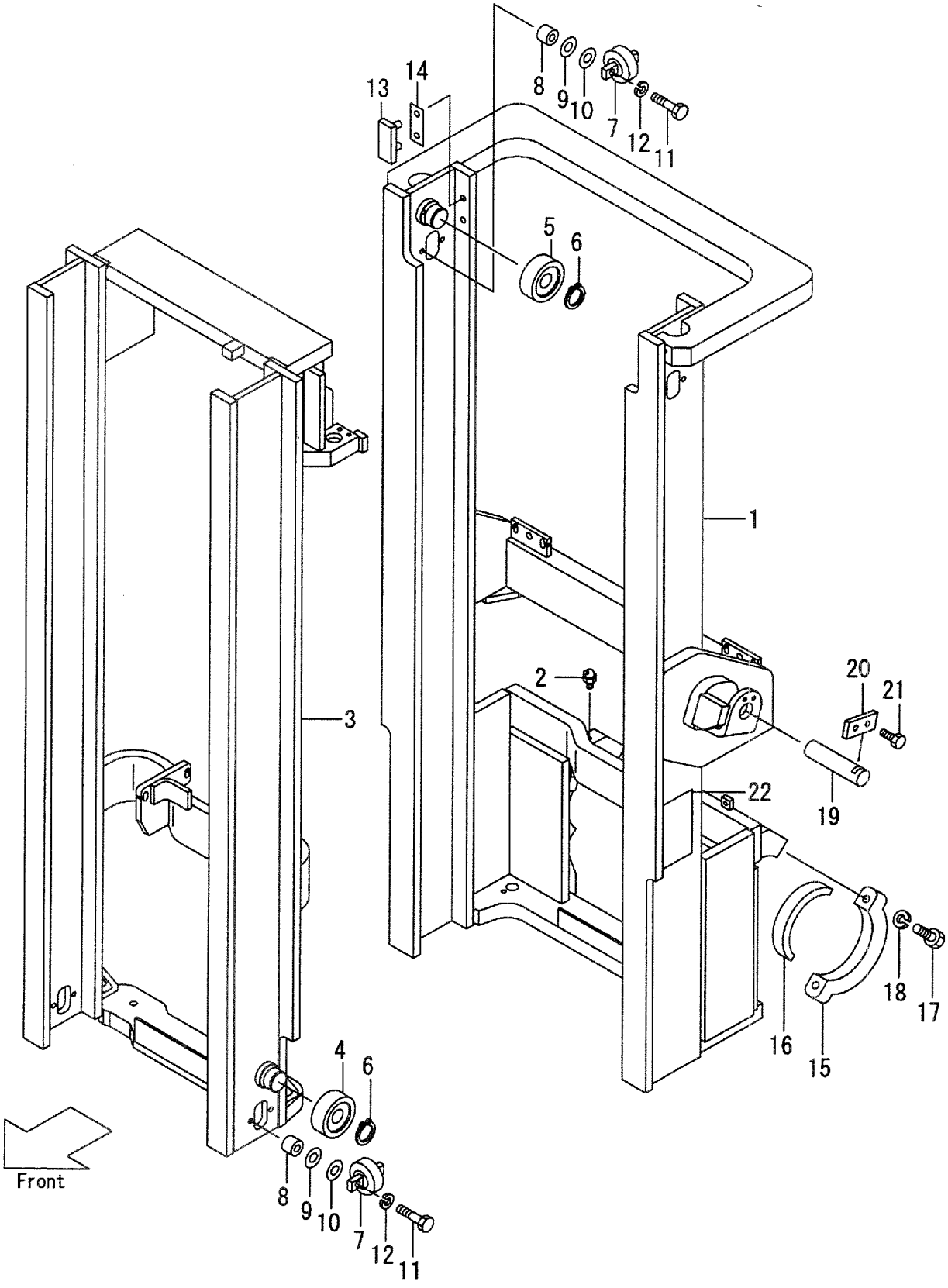

A:VFM28E(FD45,FG45)

Item No	Part No.	Mark	Description		Req'd	Remarks : Serial No.
1	228E0-40003		MAST,OUTER VFM300	ｱｳﾀﾏｽﾄ	1	
-	228E0-40013		MAST,OUTER VFM325	ｱｳﾀﾏｽﾄ	1	
-	228E0-40023		MAST,OUTER VFM330	ｱｳﾀﾏｽﾄ	1	
-	228E0-40033		MAST,OUTER VFM350	ｱｳﾀﾏｽﾄ	1	
-	228E0-40043		MAST,OUTER VFM366	ｱｳﾀﾏｽﾄ	1	
-	228E0-40053		MAST,OUTER VFM370	ｱｳﾀﾏｽﾄ	1	
-	228E0-40063		MAST,OUTER VFM375	ｱｳﾀﾏｽﾄ	1	
-	228E0-40073		MAST,OUTER VFM400	ｱｳﾀﾏｽﾄ	1	
2	04901-00160		FITTING	ﾌｨｯﾃｨﾝｸﾞ	2	
3	228X0-40201		MAST,INNER VFM300	ｲﾝﾅﾏｽﾄ	1	
-	228X0-40211		MAST,INNER VFM325	ｲﾝﾅﾏｽﾄ	1	
-	228X0-40221		MAST,INNER VFM330	ｲﾝﾅﾏｽﾄ	1	
-	228X0-40231		MAST,INNER VFM350	ｲﾝﾅﾏｽﾄ	1	
-	228X0-40241		MAST,INNER VFM366	ｲﾝﾅﾏｽﾄ	1	
-	228X0-40251		MAST,INNER VFM370	ｲﾝﾅﾏｽﾄ	1	
-	228X0-40261		MAST,INNER VFM375	ｲﾝﾅﾏｽﾄ	1	
-	228X0-40271		MAST,INNER VFM400	ｲﾝﾅﾏｽﾄ	1	
4	23818-20701		ROLLER,END,143.5	ﾛｰﾗ	2	
-	23958-22081		ROLLER,END,144	ﾛｰﾗ	(2)	
5	23818-20701		ROLLER,END,143.5	ﾛｰﾗ	2	
6	02100-00050		RING,SNAP	ｽﾅｯﾌﾟﾘﾝｸﾞ	4	
7	23818-30301		ROLLER,SIDE	ﾛｰﾗ	4	
8	23818-30071		SPACER	ｽﾍﾟｰｻ	8	
9	22548-34051		SHIM,T-0.5	ｼﾑ	16	
10	22548-34061		SHIM,T-1.0	ｼﾑ	8	
11	01100-12045		BOLT	ﾎﾞﾙﾄ	8	
12	02010-00012		WASHER	ﾜｯｼｬ	8	
13	22678-32001		SLIPPER,T-4	ｽﾘｯﾊﾟ	2	
14	22679-43231		SHIM,T-0.5	ｼﾑ	4	
15	224T8-02201		CAP	ｷｬｯﾌﾟ	2	
16	224T8-02001		BUSHING	ﾌﾞｯｼﾝｸﾞ	2	
17	01103-20085		BOLT	ﾎﾞﾙﾄ	4	
18	02010-00020		WASHER	ﾜｯｼｬ	4	
19	224T8-52501		PIN	ﾋﾟﾝ	2	
20	23648-50161		PLATE	ﾌﾟﾚｰﾄ	2	
21	01184-10020		BOLT	ﾎﾞﾙﾄ	4	
22	23678-06002		PLATE,NAME	ﾌﾟﾚｰﾄ	1	

FIG.196 LIFT CYLINDER (FRONT)[VFM28E](4CYLINDER)

(M40405B0) リフトシリンダ

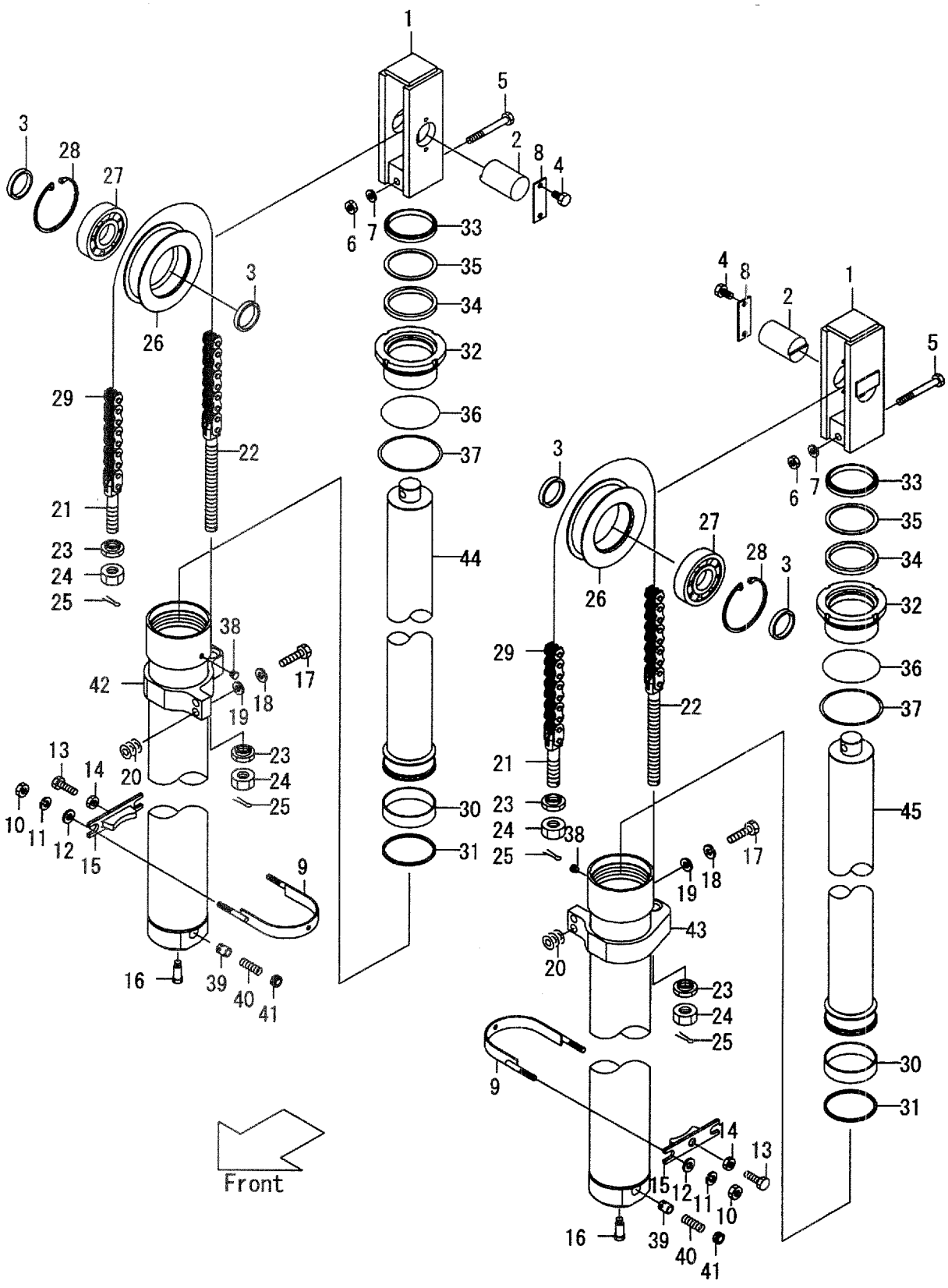

A:VFM28E(FD45,FG45)

Item No	Part No.	Mark	Description		Req'd	Remarks : Serial No.
1	224X0-52001		HEAD,PISTON	ﾍｯﾄﾞ	2	
2	224X0-52091		PIN	ﾋﾟﾝ	2	
3	224X0-52081		SPACER	ｽﾍﾟｰｻ	4	
4	01184-08015		BOLT	ﾎﾞﾙﾄ	4	
5	01100-12100		BOLT	ﾎﾞﾙﾄ	2	
6	01400-00012		NUT	ﾅｯﾄ	2	
7	02010-00012		WASHER	ﾜｯｼｬ	2	
8	224X0-52191		PLATE	ﾌﾟﾚｰﾄ	2	
9	224X0-52131		SUPPORT,SYL	ｻﾎﾟｰﾄ	2	
10	01400-00010		NUT	ﾅｯﾄ	4	
11	02010-20010		WASHER	ﾜｯｼｬ	4	
12	02000-20010		WASHER	ﾜｯｼｬ	4	
13	232A8-42201		BOLT	ﾎﾞﾙﾄ	2	
14	01402-00012		NUT	ﾅｯﾄ	2	
15	25788-42491		SUPPORT	ｻﾎﾟｰﾄ	2	
16	224T0-82561		BOLT	ﾎﾞﾙﾄ	2	
17	01103-10040		BOLT	ﾎﾞﾙﾄ	4	
18	02011-00010		WASHER	ﾜｯｼｬ	4	
19	02000-00010		WASHER	ﾜｯｼｬ	4	
20	22018-30261		SHIM	ｼﾑ	12	
21	23918-42681		PIN,ANCHOR	ﾋﾟﾝ	2	
22	24329-45441		PIN,ANCHOR	ﾋﾟﾝ	2	
23	23818-30271		NUT	ﾅｯﾄ	4	
24	01402-00022		NUT	ﾅｯﾄ	4	
25	02200-03040		PIN	ﾋﾟﾝ	4	
A1	224X0-52061		SHEAVE-ASSY	ｼｰﾌﾞｱｯｾﾝ	2	INC.26-28
26	224X0-52071		SHEAVE	ｼｰﾌﾞ	2	
27	03041-06310		BEARING	ﾍﾞｱﾘﾝｸﾞ	2	
28	02110-00110		RING,SNAP	ｽﾅｯﾌﾟﾘﾝｸﾞ	2	
29	23918-45511		CHAIN VFM300	ﾁｪｰﾝ	2	
-	23918-45531		CHAIN VFM325	ﾁｪｰﾝ	2	
-	23918-45551		CHAIN VFM330	ﾁｪｰﾝ	2	
-	23918-45571		CHAIN VFM350	ﾁｪｰﾝ	2	
-	23918-45591		CHAIN VFM366	ﾁｪｰﾝ	2	
-	23918-45631		CHAIN VFM400	ﾁｪｰﾝ	2	
A2	224X0-50002		CYL-ASSY,LIFT,RH VFM300	ﾘﾌﾄｼﾘﾝﾀﾞｱｯｾﾝ	1	MAST NO.1 INC.30-45
-	224X0-50003		CYL-ASSY,LIFT,RH VFM300	ﾘﾌﾄｼﾘﾝﾀﾞｱｯｾﾝ	1	MAST NO.2- INC.30-45
-	224X0-50012		CYL-ASSY,LIFT,RH VFM325	ﾘﾌﾄｼﾘﾝﾀﾞｱｯｾﾝ	1	MAST NO.1 INC.30-45
-	224X0-50013		CYL-ASSY,LIFT,RH VFM325	ﾘﾌﾄｼﾘﾝﾀﾞｱｯｾﾝ	1	MAST NO.2- INC.30-45
-	224X0-50022		CYL-ASSY,LIFT,RH VFM330	ﾘﾌﾄｼﾘﾝﾀﾞｱｯｾﾝ	1	MAST NO.1 INC.30-45
-	224X0-50023		CYL-ASSY,LIFT,RH VFM330	ﾘﾌﾄｼﾘﾝﾀﾞｱｯｾﾝ	1	MAST NO.2- INC.30-45
-	224X0-50032		CYL-ASSY,LIFT,RH VFM350	ﾘﾌﾄｼﾘﾝﾀﾞｱｯｾﾝ	1	MAST NO.1 INC.30-45

FIG.196 LIFT CYLINDER (FRONT)[VFM28E](4CYLINDER)

(M40405B0) リフトシリンダ

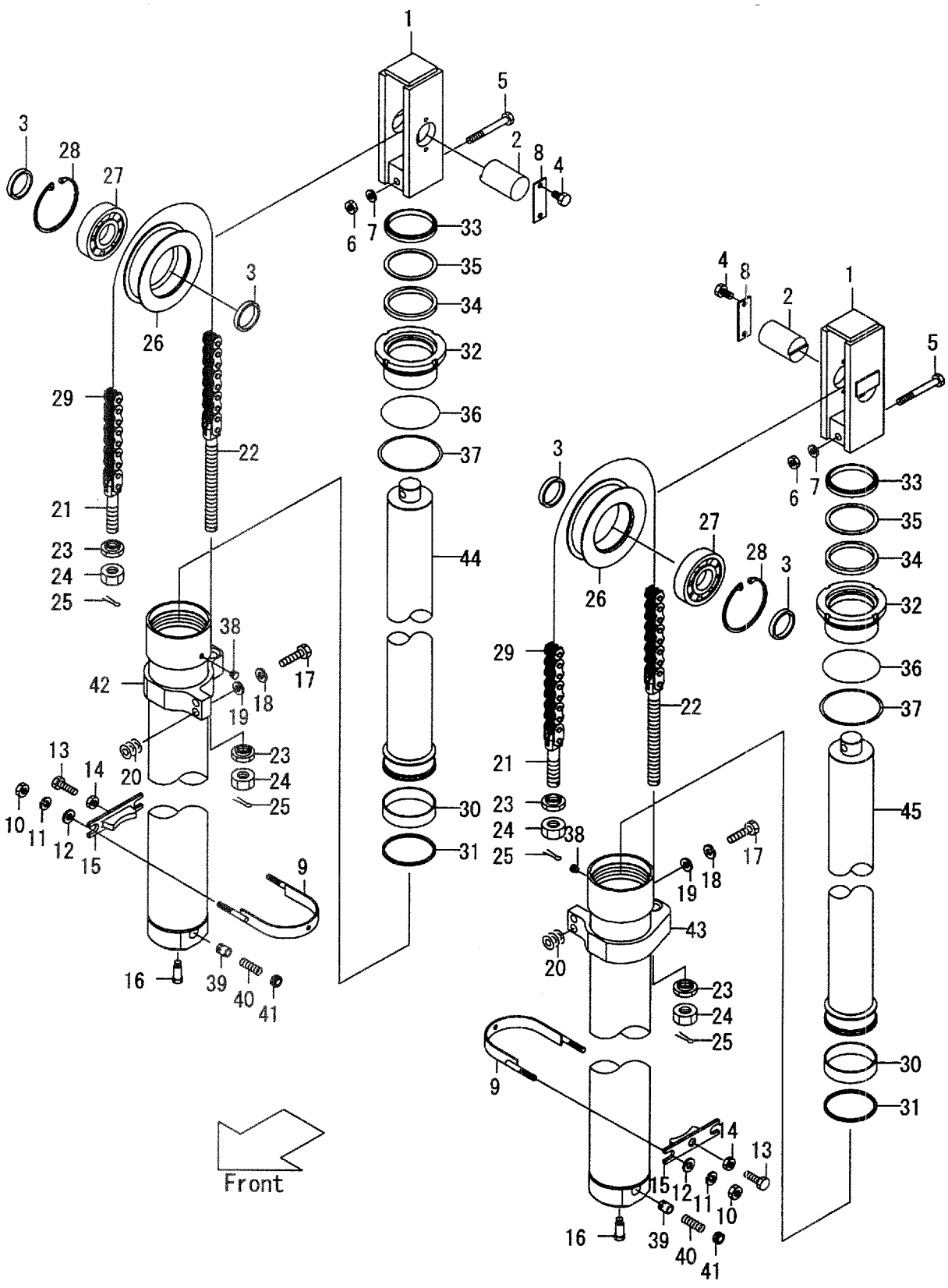

A:VFM28E(FD45,FG45)

Item No	Part No.	Mark	Description	Req'd	Remarks : Serial No.
-	224X0-50033		CYL-ASSY,LIFT,RH VFM350 ﾘﾌﾄｼﾘﾝﾀﾞｱｯｾﾝ	1	MAST NO.2- INC.30-45
-	224X0-50042		CYL-ASSY,LIFT,RH VFM366 ﾘﾌﾄｼﾘﾝﾀﾞｱｯｾﾝ	1	MAST NO.1 INC.30-45
-	224X0-50043		CYL-ASSY,LIFT,RH VFM366 ﾘﾌﾄｼﾘﾝﾀﾞｱｯｾﾝ	1	MAST NO.2- INC.30-45
-	224X0-50052		CYL-ASSY,LIFT,RH VFM370 ﾘﾌﾄｼﾘﾝﾀﾞｱｯｾﾝ	1	MAST NO.1 INC.30-45
-	224X0-50053		CYL-ASSY,LIFT,RH VFM370 ﾘﾌﾄｼﾘﾝﾀﾞｱｯｾﾝ	1	MAST NO.2- INC.30-45
-	224X0-50062		CYL-ASSY,LIFT,RH VFM375 ﾘﾌﾄｼﾘﾝﾀﾞｱｯｾﾝ	1	MAST NO.1 INC.30-45
-	224X0-50063		CYL-ASSY,LIFT,RH VFM375 ﾘﾌﾄｼﾘﾝﾀﾞｱｯｾﾝ	1	MAST NO.2- INC.30-45
-	224X0-50072		CYL-ASSY,LIFT,RH VFM400 ﾘﾌﾄｼﾘﾝﾀﾞｱｯｾﾝ	1	MAST NO.1 INC.30-45
-	224X0-50073		CYL-ASSY,LIFT,RH VFM400 ﾘﾌﾄｼﾘﾝﾀﾞｱｯｾﾝ	1	MAST NO.2- INC.30-45
A3	224X0-50102		CYL-ASSY,LIFT,LH VFM300 ﾘﾌﾄｼﾘﾝﾀﾞｱｯｾﾝ	1	MAST NO.1 INC.30-45
-	224X0-50103		CYL-ASSY,LIFT,LH VFM300 ﾘﾌﾄｼﾘﾝﾀﾞｱｯｾﾝ	1	MAST NO.2- INC.30-45
-	224X0-50112		CYL-ASSY,LIFT,LH VFM325 ﾘﾌﾄｼﾘﾝﾀﾞｱｯｾﾝ	1	MAST NO.1 INC.30-45
-	224X0-50113		CYL-ASSY,LIFT,LH VFM325 ﾘﾌﾄｼﾘﾝﾀﾞｱｯｾﾝ	1	MAST NO.2- INC.30-45
-	224X0-50122		CYL-ASSY,LIFT,LH VFM330 ﾘﾌﾄｼﾘﾝﾀﾞｱｯｾﾝ	1	MAST NO.1 INC.30-45
-	224X0-50123		CYL-ASSY,LIFT,LH VFM330 ﾘﾌﾄｼﾘﾝﾀﾞｱｯｾﾝ	1	MAST NO.2- INC.30-45
-	224X0-50132		CYL-ASSY,LIFT,LH VFM350 ﾘﾌﾄｼﾘﾝﾀﾞｱｯｾﾝ	1	MAST NO.1 INC.30-45
-	224X0-50133		CYL-ASSY,LIFT,LH VFM350 ﾘﾌﾄｼﾘﾝﾀﾞｱｯｾﾝ	1	MAST NO.2- INC.30-45
-	224X0-50142		CYL-ASSY,LIFT,LH VFM366 ﾘﾌﾄｼﾘﾝﾀﾞｱｯｾﾝ	1	MAST NO.1 INC.30-45
-	224X0-50143		CYL-ASSY,LIFT,LH VFM366 ﾘﾌﾄｼﾘﾝﾀﾞｱｯｾﾝ	1	MAST NO.2- INC.30-45
-	224X0-50152		CYL-ASSY,LIFT,LH VFM370 ﾘﾌﾄｼﾘﾝﾀﾞｱｯｾﾝ	1	MAST NO.1 INC.30-45
-	224X0-50153		CYL-ASSY,LIFT,LH VFM370 ﾘﾌﾄｼﾘﾝﾀﾞｱｯｾﾝ	1	MAST NO.2- INC.30-45
-	224X0-50162		CYL-ASSY,LIFT,LH VFM375 ﾘﾌﾄｼﾘﾝﾀﾞｱｯｾﾝ	1	MAST NO.1 INC.30-45
-	224X0-50163		CYL-ASSY,LIFT,LH VFM375 ﾘﾌﾄｼﾘﾝﾀﾞｱｯｾﾝ	1	MAST NO.2- INC.30-45
-	224X0-50172		CYL-ASSY,LIFT,LH VFM400 ﾘﾌﾄｼﾘﾝﾀﾞｱｯｾﾝ	1	MAST NO.1 INC.30-45
-	224X0-50173		CYL-ASSY,LIFT,LH VFM400 ﾘﾌﾄｼﾘﾝﾀﾞｱｯｾﾝ	1	MAST NO.2- INC.30-45

FIG.196 LIFT CYLINDER (FRONT)[VFM28E](4CYLINDER)

(M40405B0) リフトシリンダ

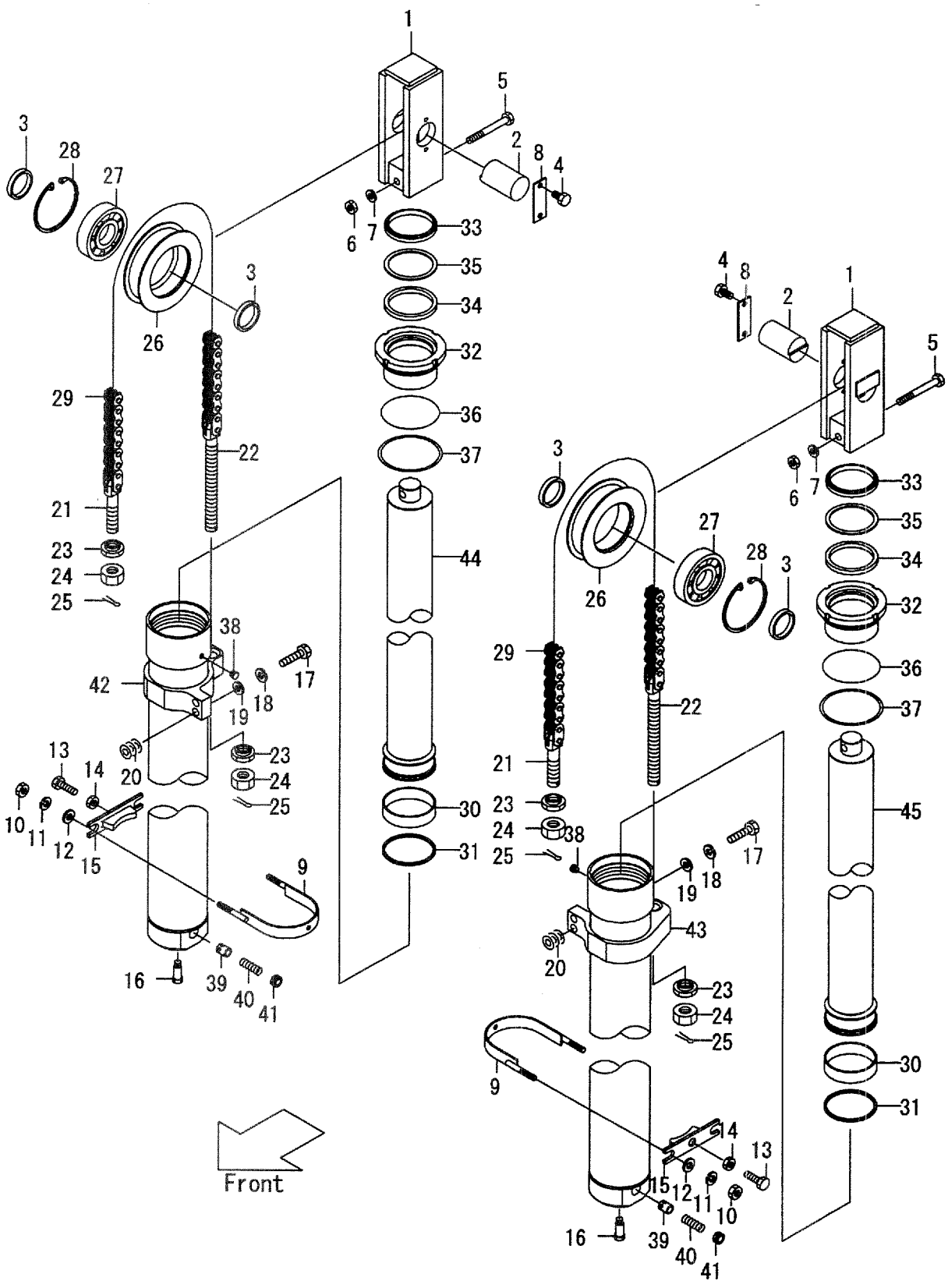

A:VFM28E(FD45,FG45)

Item No	Part No.	Mark	Description		Req'd	Remarks : Serial No.
30	23918-52131		WEARING	ｳｴｱﾘﾝｸﾞ	2	
31	54458-42011		RING,PISTON	ﾘﾝｸﾞ	2	
32	224X0-52101		CAP,CYL	ｷｬｯﾌﾟ	2	
33	24469-42721		SEAL,DUST	ｼｰﾙ	2	
34	24450-82241		PACKING	ﾊﾟｯｷﾝｸﾞ	2	
35	24450-82251		RING,BACK-UP	ﾘﾝｸﾞ	2	
36	03350-01100		O-RING	Oﾘﾝｸﾞ	2	
37	03370-01100		RING,BACK-UP	ﾘﾝｸﾞ	2	
38	23870-52871		PLUG	ﾌﾟﾗｸﾞ	2	
39	24320-55001		PISTON	ﾋﾟｽﾄﾝ	2	
40	24230-52701		SPRING	ｽﾌﾟﾘﾝｸﾞ	2	
41	24230-82071		RETAINER	ﾘﾃｰﾅ	2	
42	224X0-50202		TUBE,RH VFM300	ﾁｭｰﾌﾞ	1	
-	224X0-50212		TUBE,RH VFM325	ﾁｭｰﾌﾞ	1	
-	224X0-50222		TUBE,RH VFM330	ﾁｭｰﾌﾞ	1	
-	224X0-50232		TUBE,RH VFM350	ﾁｭｰﾌﾞ	1	
-	224X0-50242		TUBE,RH VFM366	ﾁｭｰﾌﾞ	1	
-	224X0-50252		TUBE,RH VFM370	ﾁｭｰﾌﾞ	1	
-	224X0-50262		TUBE,RH VFM375	ﾁｭｰﾌﾞ	1	
-	224X0-50272		TUBE,RH VFM400	ﾁｭｰﾌﾞ	1	
43	224X0-50402		TUBE,LH VFM300	ﾁｭｰﾌﾞ	1	
-	224X0-50412		TUBE,LH VFM325	ﾁｭｰﾌﾞ	1	
-	224X0-50422		TUBE,LH VFM330	ﾁｭｰﾌﾞ	1	
-	224X0-50432		TUBE,LH VFM350	ﾁｭｰﾌﾞ	1	
-	224X0-50442		TUBE,LH VFM366	ﾁｭｰﾌﾞ	1	
-	224X0-50452		TUBE,LH VFM370	ﾁｭｰﾌﾞ	1	
-	224X0-50462		TUBE,LH VFM375	ﾁｭｰﾌﾞ	1	
-	224X0-50472		TUBE,LH VFM400	ﾁｭｰﾌﾞ	1	
44	224X0-50601		ROD,PISTON,RH VFM300	ﾛｯﾄﾞ	1	MAST NO.1
-	224X0-50602		ROD,PISTON,RH VFM300	ﾛｯﾄﾞ	1	MAST NO.2-
-	224X0-50611		ROD,PISTON,RH VFM325	ﾛｯﾄﾞ	1	MAST NO.1
-	224X0-50612		ROD,PISTON,RH VFM325	ﾛｯﾄﾞ	1	MAST NO.2-
-	224X0-50621		ROD,PISTON,RH VFM330	ﾛｯﾄﾞ	1	MAST NO.1
-	224X0-50622		ROD,PISTON,RH VFM330	ﾛｯﾄﾞ	1	MAST NO.2-
-	224X0-50631		ROD,PISTON,RH VFM350	ﾛｯﾄﾞ	1	MAST NO.1
-	224X0-50632		ROD,PISTON,RH VFM350	ﾛｯﾄﾞ	1	MAST NO.2-
-	224X0-50641		ROD,PISTON,RH VFM366	ﾛｯﾄﾞ	1	MAST NO.1
-	224X0-50642		ROD,PISTON,RH VFM366	ﾛｯﾄﾞ	1	MAST NO.2-
-	224X0-50651		ROD,PISTON,RH VFM370	ﾛｯﾄﾞ	1	MAST NO.1
-	224X0-50652		ROD,PISTON,RH VFM370	ﾛｯﾄﾞ	1	MAST NO.2-
-	224X0-50661		ROD,PISTON,RH VFM375	ﾛｯﾄﾞ	1	MAST NO.1
-	224X0-50662		ROD,PISTON,RH VFM375	ﾛｯﾄﾞ	1	MAST NO.2-
-	224X0-50671		ROD,PISTON,RH VFM400	ﾛｯﾄﾞ	1	MAST NO.1
-	224X0-50672		ROD,PISTON,RH VFM400	ﾛｯﾄﾞ	1	MAST NO.2-
45	224X0-50601		ROD,PISTON,LH VFM300	ﾛｯﾄﾞ	1	MAST NO.1
-	224X0-50602		ROD,PISTON,LH VFM300	ﾛｯﾄﾞ	1	MAST NO.2-
-	224X0-50611		ROD,PISTON,LH VFM325	ﾛｯﾄﾞ	1	MAST NO.1
-	224X0-50612		ROD,PISTON,LH VFM325	ﾛｯﾄﾞ	1	MAST NO.2-
-	224X0-50621		ROD,PISTON,LH VFM330	ﾛｯﾄﾞ	1	MAST NO.1
-	224X0-50622		ROD,PISTON,LH VFM330	ﾛｯﾄﾞ	1	MAST NO.2-

FIG.196 LIFT CYLINDER (FRONT)[VFM28E](4CYLINDER)

(M40405B0) リフトシリンダ

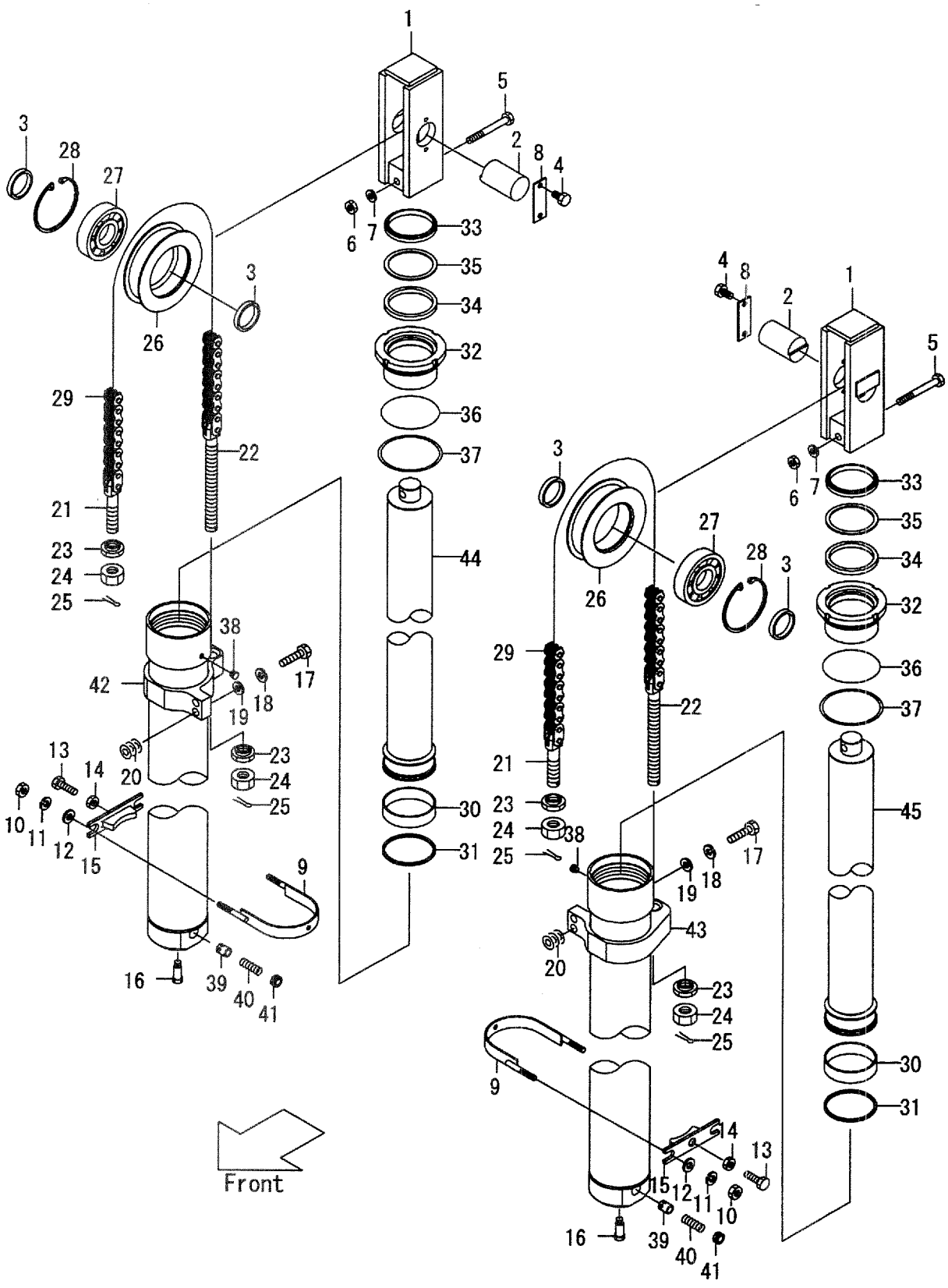

A:VFM28E(FD45,FG45)

Item No	Part No.	Mark	Description	Req'd	Remarks : Serial No.
-	224X0-50631		ROD,PISTON,LH VFM350 ﾛｯﾄﾞ	1	MAST NO.1
-	224X0-50632		ROD,PISTON,LH VFM350 ﾛｯﾄﾞ	1	MAST NO.2-
-	224X0-50641		ROD,PISTON,LH VFM366 ﾛｯﾄﾞ	1	MAST NO.1
-	224X0-50642		ROD,PISTON,LH VFM366 ﾛｯﾄﾞ	1	MAST NO.2-
-	224X0-50651		ROD,PISTON,LH VFM370 ﾛｯﾄﾞ	1	MAST NO.1
-	224X0-50652		ROD,PISTON,LH VFM370 ﾛｯﾄﾞ	1	MAST NO.2-
-	224X0-50661		ROD,PISTON,LH VFM375 ﾛｯﾄﾞ	1	MAST NO.1
-	224X0-50662		ROD,PISTON,LH VFM375 ﾛｯﾄﾞ	1	MAST NO.2-
-	224X0-50671		ROD,PISTON,LH VFM400 ﾛｯﾄﾞ	1	MAST NO.1
-	224X0-50672		ROD,PISTON,LH VFM400 ﾛｯﾄﾞ	1	MAST NO.2-

FIG.197 LIFT CYLINDER (REAR)[VFM28E](4CYLINDER)

(M40405D0) リフトシリンダ

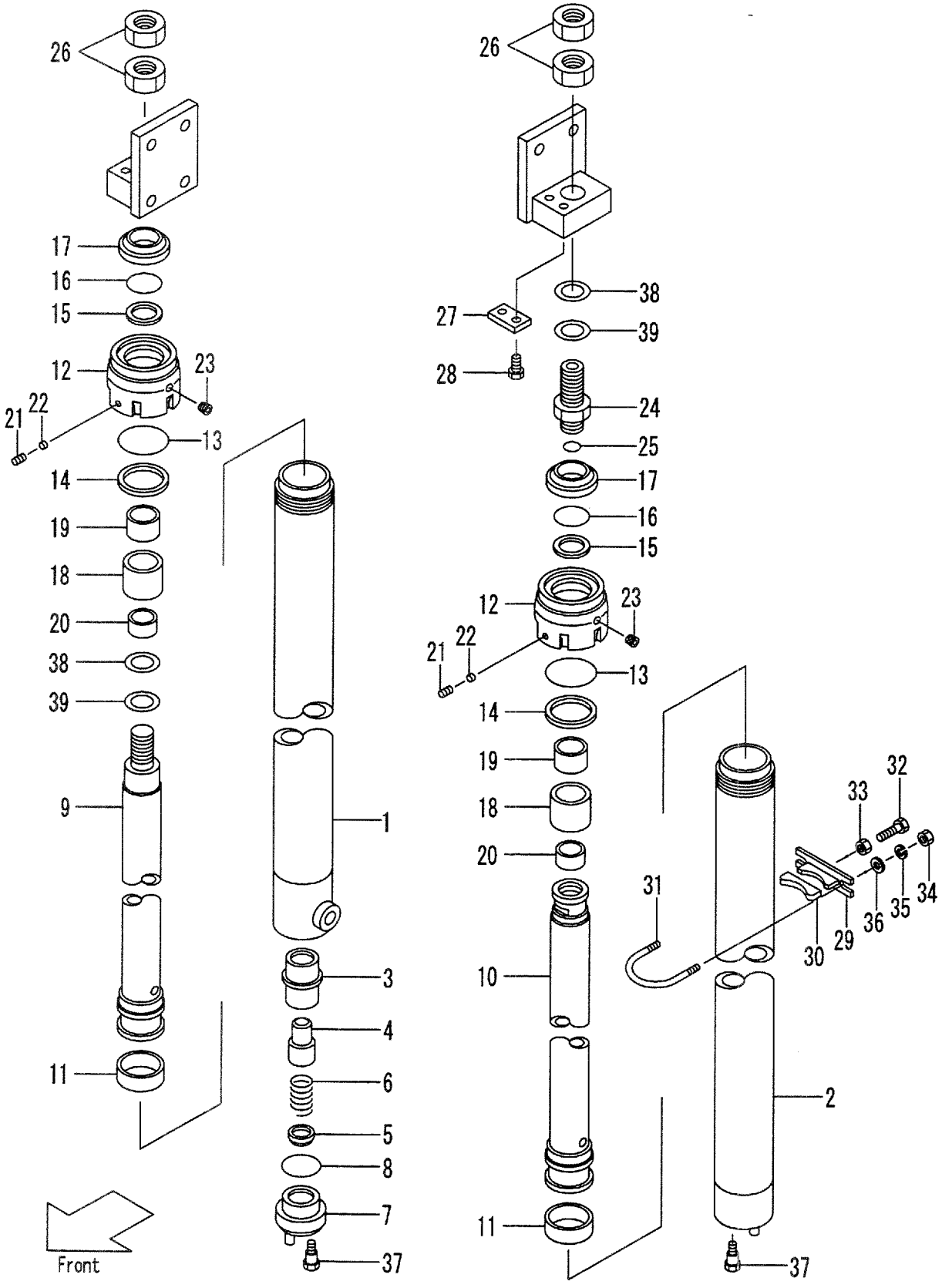

A:VFM28E(FD45,FG45)

Item No	Part No.	Mark	Description	Req'd	Remarks : Serial No.
A1	228C0-50601		CYL-ASSY,LIFT,RH VFM300 リフトシリンダアッセン	1	INC.1-23
-	228C0-50641		CYL-ASSY,LIFT,RH VFM325 リフトシリンダアッセン	1	INC.1-23
-	228C0-50651		CYL-ASSY,LIFT,RH VFM330 リフトシリンダアッセン	1	INC.1-23
-	228C0-50661		CYL-ASSY,LIFT,RH VFM350 リフトシリンダアッセン	1	INC.1-23
-	228C0-50671		CYL-ASSY,LIFT,RH VFM366 リフトシリンダアッセン	1	INC.1-23
-	228C0-50681		CYL-ASSY,LIFT,RH VFM370 リフトシリンダアッセン	1	INC.1-23
-	228C0-50691		CYL-ASSY,LIFT,RH VFM375 リフトシリンダアッセン	1	INC.1-23
-	228C0-50701		CYL-ASSY,LIFT,RH VFM400 リフトシリンダアッセン	1	INC.1-23
A2	224X0-51001		CYL-ASSY,LIFT,LH VFM300 リフトシリンダアッセン	1	INC.2-25
-	224X0-51011		CYL-ASSY,LIFT,LH VFM325 リフトシリンダアッセン	1	INC.2-25
-	224X0-51021		CYL-ASSY,LIFT,LH VFM330 リフトシリンダアッセン	1	INC.2-25
-	224X0-51031		CYL-ASSY,LIFT,LH VFM350 リフトシリンダアッセン	1	INC.2-25
-	224X0-51041		CYL-ASSY,LIFT,LH VFM366 リフトシリンダアッセン	1	INC.2-25
-	224X0-51051		CYL-ASSY,LIFT,LH VFM370 リフトシリンダアッセン	1	INC.2-25
-	224X0-51061		CYL-ASSY,LIFT,LH VFM375 リフトシリンダアッセン	1	INC.2-25
-	224X0-51071		CYL-ASSY,LIFT,LH VFM400 リフトシリンダアッセン	1	INC.2-25
1	228C0-51001		TUBE,RH VFM300 チューブ	1	
-	228C0-51041		TUBE,RH VFM325 チューブ	1	
-	228C0-51051		TUBE,RH VFM330 チューブ	1	
-	228C0-51061		TUBE,RH VFM350 チューブ	1	
-	228C0-51071		TUBE,RH VFM366 チューブ	1	
-	228C0-51081		TUBE,RH VFM370 チューブ	1	
-	228C0-51091		TUBE,RH VFM375 チューブ	1	
-	228C0-51101		TUBE,RH VFM400 チューブ	1	
2	224X0-51201		TUBE,LH VFM300 チューブ	1	
-	224X0-51211		TUBE,LH VFM325 チューブ	1	
-	224X0-51221		TUBE,LH VFM330 チューブ	1	
-	224X0-51231		TUBE,LH VFM350 チューブ	1	
-	224X0-51241		TUBE,LH VFM366 チューブ	1	
-	224X0-51251		TUBE,LH VFM370 チューブ	1	
-	224X0-51261		TUBE,LH VFM375 チューブ	1	
-	224X0-51271		TUBE,LH VFM400 チューブ	1	
3	53658-43021		SLEEVE スリーブ	1	(RH)
4	53658-43011		PISTON ピストン	1	(RH)

FIG.197 LIFT CYLINDER (REAR)[VFM28E](4CYLINDER)

(M40405D0) リフトシリンダ

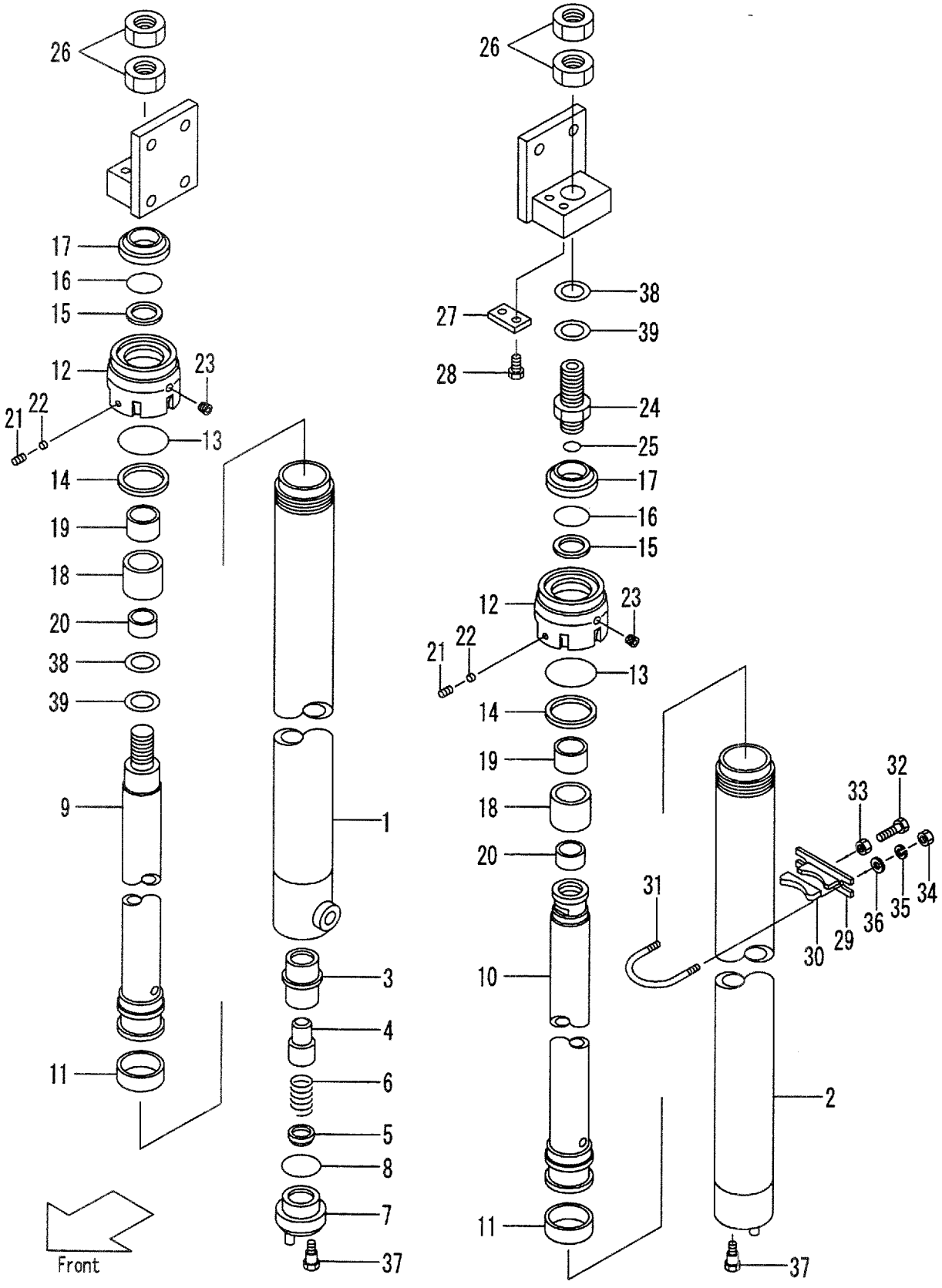

A:VFM28E(FD45,FG45)

Item No	Part No.	Mark	Description		Req'd	Remarks : Serial No.
5	53658-43001		CHECK	ﾁｪｯｸ	1	(RH)
6	53658-43031		SPRING	ｽﾌﾟﾘﾝｸﾞ	1	(RH)
7	54238-43051		PLUG	ﾌﾟﾗｸﾞ	1	(RH)
8	03320-00340	*	O-RING	Oﾘﾝｸﾞ	1	(RH)
9	228C0-51401		ROD,PISTON,RH VFM300	ﾛｯﾄﾞ	1	
-	228C0-51441		ROD,PISTON,RH VFM325	ﾛｯﾄﾞ	1	
-	228C0-51451		ROD,PISTON,RH VFM330	ﾛｯﾄﾞ	1	
-	228C0-51461		ROD,PISTON,RH VFM350	ﾛｯﾄﾞ	1	
-	228C0-51471		ROD,PISTON,RH VFM366	ﾛｯﾄﾞ	1	
-	228C0-51481		ROD,PISTON,RH VFM370	ﾛｯﾄﾞ	1	
-	228C0-51491		ROD,PISTON,RH VFM375	ﾛｯﾄﾞ	1	
-	228C0-51501		ROD,PISTON,RH VFM400	ﾛｯﾄﾞ	1	
10	228C0-51601		ROD,PISTON,LH VFM300	ﾛｯﾄﾞ	1	
-	228C0-51641		ROD,PISTON,LH VFM325	ﾛｯﾄﾞ	1	
-	228C0-51651		ROD,PISTON,LH VFM330	ﾛｯﾄﾞ	1	
-	228C0-51661		ROD,PISTON,LH VFM350	ﾛｯﾄﾞ	1	
-	228C0-51671		ROD,PISTON,LH VFM366	ﾛｯﾄﾞ	1	
-	228C0-51681		ROD,PISTON,LH VFM370	ﾛｯﾄﾞ	1	
-	228C0-51691		ROD,PISTON,LH VFM375	ﾛｯﾄﾞ	1	
-	228C0-51701		ROD,PISTON,LH VFM400	ﾛｯﾄﾞ	1	
11	23460-53181	*	WEARING	ｳｴｱﾘﾝｸﾞ	2	
12	228C0-53011		CAP,CYL	ｷｬｯﾌﾟ	2	
13	03350-00650	*	O-RING	Oﾘﾝｸﾞ	2	
14	228C0-53021	*	RING,BACK-UP	ﾘﾝｸﾞ	2	
15	97103-35431	*	U-PACKING	Uﾊﾟｯｷﾝｸﾞ	2	
16	22658-52301	*	RING,BACK-UP	ﾘﾝｸﾞ	2	
17	224T8-46001	*	SEAL,DUST	ｼｰﾙ	2	
A3	228C0-53301		SLEEVE-ASSY	ｽﾘｰﾌﾞｱｯｾﾝ	2	INC.18,19
18	228C0-53311		SLEEVE	ｽﾘｰﾌﾞ	2	
19	23460-53171		BUSHING	ﾌﾞｯｼﾝｸﾞ	2	
20	228C0-53401		SPACER VFM400	ｽﾍﾟｰｻ	2	
21	25908-44101		PLUG	ﾌﾟﾗｸﾞ	2	
22	25908-44111		PLUG,NYLON	ﾌﾟﾗｸﾞ	2	
23	23870-52871		PLUG	ﾌﾟﾗｸﾞ	4	
24	224T0-53301		NIPPLE	ﾆｯﾌﾟﾙ	1	(LH)
25	03320-00240	*	O-RING	Oﾘﾝｸﾞ	1	(LH)
26	224T0-53311		NUT	ﾅｯﾄ	4	
27	23648-50161		PLATE,KEY	ﾌﾟﾚｰﾄ	1	(LH)
28	01184-10020		BOLT & WASHER	ﾎﾞﾙﾄ&ﾜｯｼｬ	2	(LH)
29	224T8-42711		SUPPORT	ｻﾎﾟｰﾄ	2	
30	214A8-42631		RUBBER	ﾗﾊﾞｰ	2	
31	224T8-42701		U-BOLT	Uﾎﾞﾙﾄ	2	
32	01120-16040		BOLT	ﾎﾞﾙﾄ	2	
33	01402-00016		NUT	ﾅｯﾄ	2	
34	01400-00010		NUT	ﾅｯﾄ	4	
35	02010-00010		WASHER	ﾜｯｼｬ	4	
36	02000-00010		WASHER	ﾜｯｼｬ	4	
37	214A0-82831		BOLT	ﾎﾞﾙﾄ	2	
38	211F8-22261		SHIM,T-0.5	ｼﾑ	5	
39	211F8-22271		SHIM,T-1.0	ｼﾑ	5	

FIG.197 LIFT CYLINDER (REAR)[VFM28E](4CYLINDER)

(M40405D0) リフトシリンダ

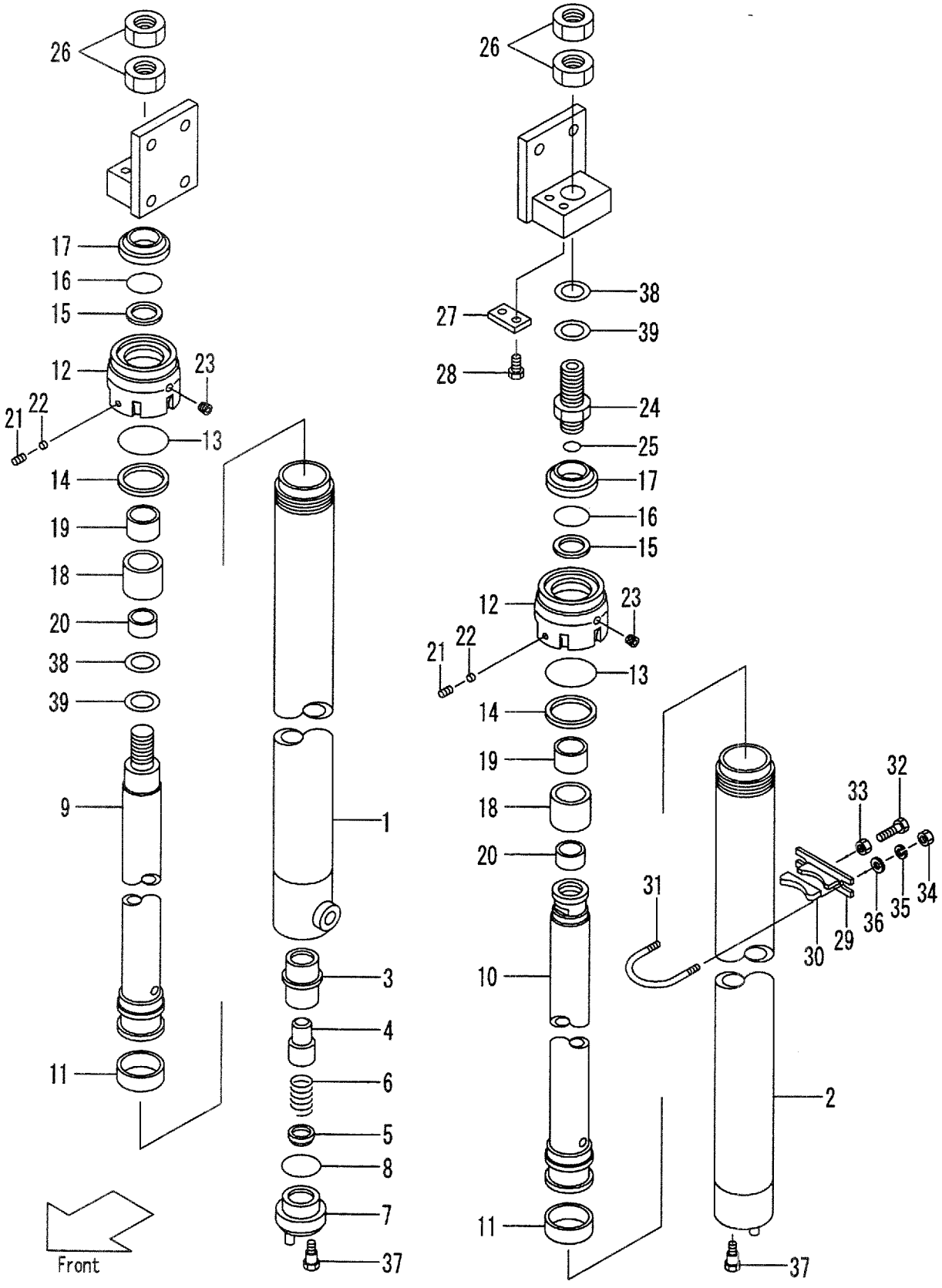

A:VFM28E(FD45,FG45)

Item No	Part No.	Mark	Description	Req'd	Remarks : Serial No.
K1	224C0-59811		KIT,OVERHAUL オーバ゛ホールキット	2	INC.8,11,13-17,25

FIG.198 MAST PIPING [VFM28E](4CYLINDER)

(M40405F0) マストパイピング

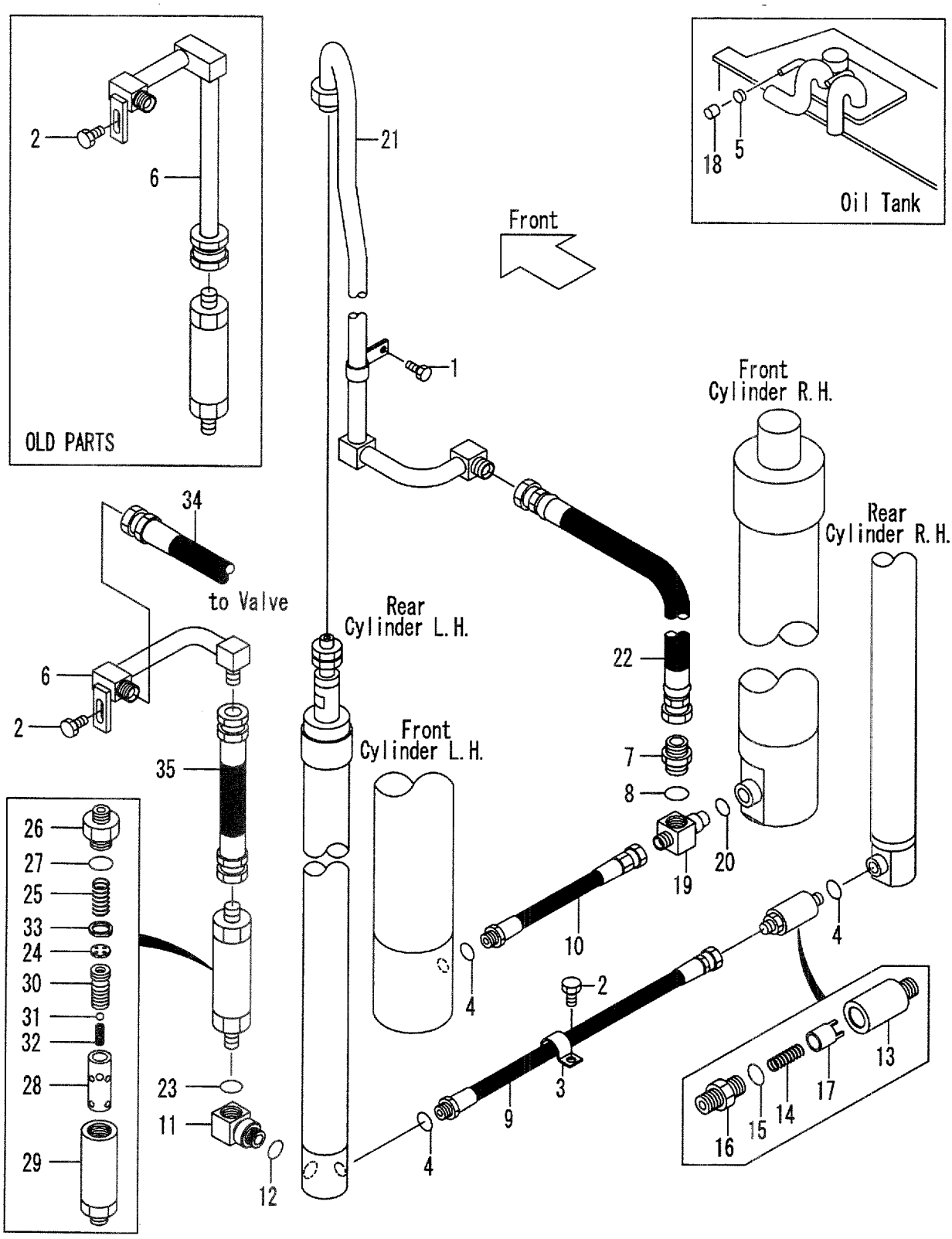

A:VFM28E(FD45,FG45)

Item No	Part No.	Mark	Description		Req'd	Remarks : Serial No.
1	01184-08020		BOLT	ﾎﾞﾙﾄ	1	
2	01184-10020		BOLT	ﾎﾞﾙﾄ	2	
3	214A8-43081		CLIP	ｸﾘｯﾌﾟ	1	
4	03320-00180		O-RING	Oﾘﾝｸﾞ	3	
5	04911-00032		CLIP	ｸﾘｯﾌﾟ	1	
6	224X0-62782		PIPE	ﾊﾟｲﾌﾟ	1	
7	04134-00606		NIPPLE	ﾆｯﾌﾟﾙ	1	
8	03320-00240		O-RING	Oﾘﾝｸﾞ	1	
9	224X0-62882		HOSE	ﾎｰｽ	1	
10	224X0-62872		HOSE	ﾎｰｽ	1	
A1	224X0-62891		ELBOW-ASSY	ｴﾙﾎﾞｱｯｾﾝ	1	INC.11,12
11	NO PART NO.	#	ELBOW	ｴﾙﾎﾞ	1	
12	03320-00240		O-RING	Oﾘﾝｸﾞ	1	
A2	24320-60601		VALVE-ASSY,CUT	ｶｯﾄﾊﾞﾙﾌﾞｱｯｾﾝ	1	INC.13-17
13	23670-62301		CASE	ｹｰｽ	1	
14	24230-52701		SPRING	ｽﾌﾟﾘﾝｸﾞ	1	
A3	24320-58581		NIPPLE-ASSY	ﾆｯﾌﾟﾙｱｯｾﾝ	1	INC.15,16
15	03320-00180		O-RING	Oﾘﾝｸﾞ	1	
16	NO PART NO.	#	NIPPLE	ﾆｯﾌﾟﾙ	1	
17	24320-63601		PISTON	ﾋﾟｽﾄﾝ	1	
18	24356-13011		CAP	ｷｬｯﾌﾟ	1	
A4	24609-43682		THREE-WAY ASSY	ｽﾘｰｳｪｲｱｯｾﾝ	1	INC.19,20
19	NO PART NO.	#	THREE-WAY	ｽﾘｰｳｴｲ	1	
20	03320-00180		O-RING	Oﾘﾝｸﾞ	1	
21	224X0-62501		PIPE VFM300	ﾊﾟｲﾌﾟ	1	
-	224X0-62511		PIPE VFM325	ﾊﾟｲﾌﾟ	1	
-	224X0-62511		PIPE VFM330	ﾊﾟｲﾌﾟ	1	
-	224X0-62531		PIPE VFM350	ﾊﾟｲﾌﾟ	1	
-	224X0-62541		PIPE VFM366	ﾊﾟｲﾌﾟ	1	
-	224X0-62551		PIPE VFM370	ﾊﾟｲﾌﾟ	1	
-	224X0-62561		PIPE VFM375	ﾊﾟｲﾌﾟ	1	
-	224X0-62571		PIPE VFM400	ﾊﾟｲﾌﾟ	1	
22	224X0-62731		HOSE VFM300	ﾎｰｽ	1	
-	224X0-62741		HOSE VFM325	ﾎｰｽ	1	
-	224X0-62751		HOSE VFM330	ﾎｰｽ	1	
-	224X0-62761		HOSE VFM350	ﾎｰｽ	1	
-	224X0-62771		HOSE VFM366	ﾎｰｽ	1	
-	224X0-62771		HOSE VFM370	ﾎｰｽ	1	
-	224X0-62771		HOSE VFM375	ﾎｰｽ	1	
-	224X0-62771		HOSE VFM400	ﾎｰｽ	1	
23	03320-00240		O-RING	Oﾘﾝｸﾞ	1	
A5	228C8-41002		REGULATOR-ASSY,FLOW	ﾚｷﾞｭﾚｰﾀｱｯｾﾝ	1	INC.24-33
24	24329-45561		PLATE,ORIFICE	ﾌﾟﾚｰﾄ	1	
25	24609-43631		SPRING	ｽﾌﾟﾘﾝｸﾞ	2	
26	25908-44461		NIPPLE	ﾆｯﾌﾟﾙ	1	
27	03320-00360		O-RING	Oﾘﾝｸﾞ	1	
28	224T8-43011		SLEEVE	ｽﾘｰﾌﾞ	1	
29	224T8-43001		CASE	ｹｰｽ	1	
30	24609-43671		PISTON	ﾋﾟｽﾄﾝ	1	
31	24459-42951		NYLON,BALL	ﾎﾞｰﾙ	1	

FIG.198 MAST PIPING [VFM28E](4CYLINDER)

(M40405F0) マストパイピング

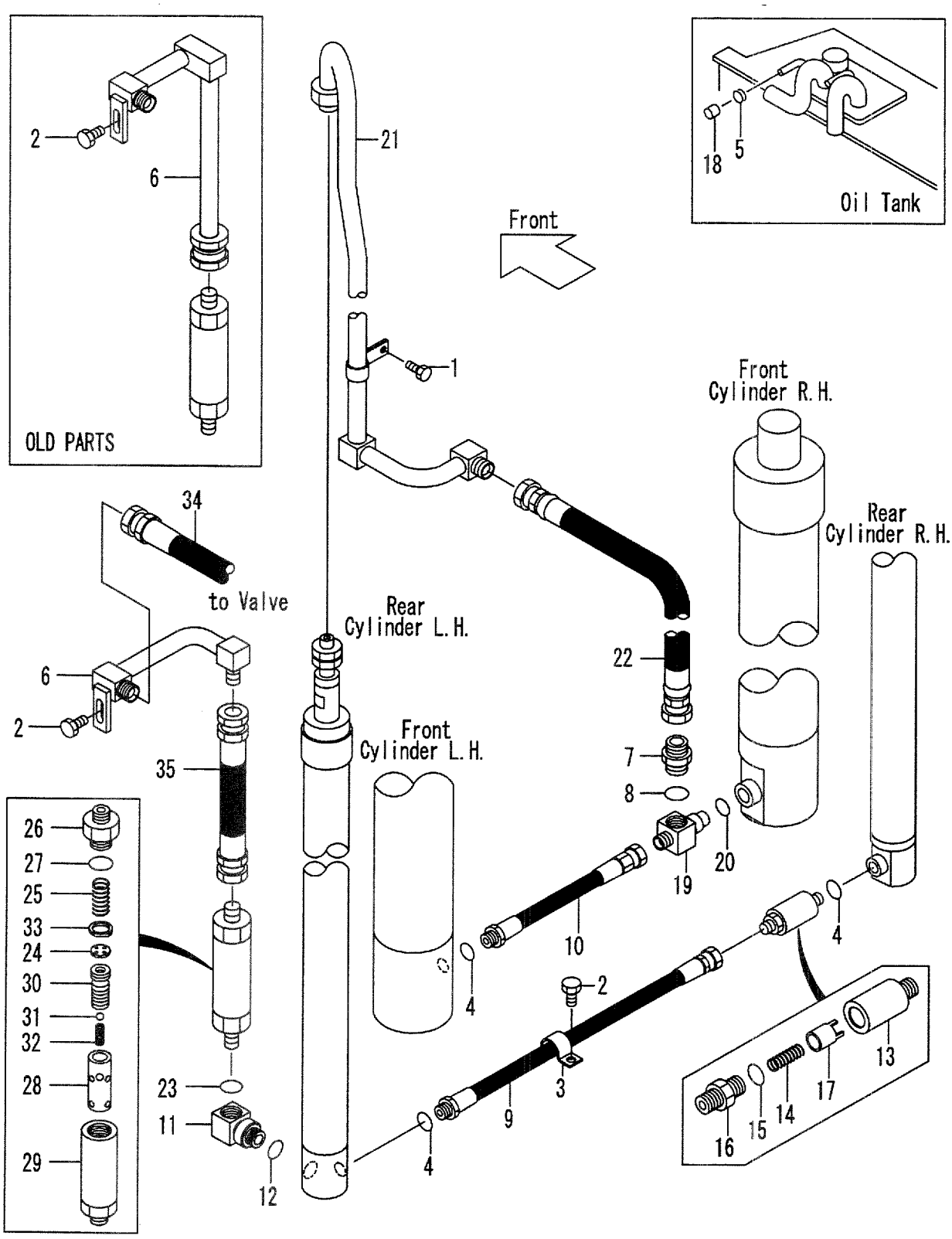

A:VFM28E(FD45,FG45)

Item No	Part No.	Mark	Description		Req'd	Remarks : Serial No.
32	214A8-44151		SPRING	ｽﾌﾟﾘﾝｸﾞ	1	
33	02110-00020		RING,SNAP	ｽﾅｯﾌﾟﾘﾝｸﾞ	1	
34	224X0-62851		HOSE,HP	ﾎｰｽ	1	
35	224X0-62921		HOSE	ﾎｰｽ	1	

FIG.199 FORK & LIFT BRACKET [VFM35H]

(M4040630) フォーク & リフトブラケット

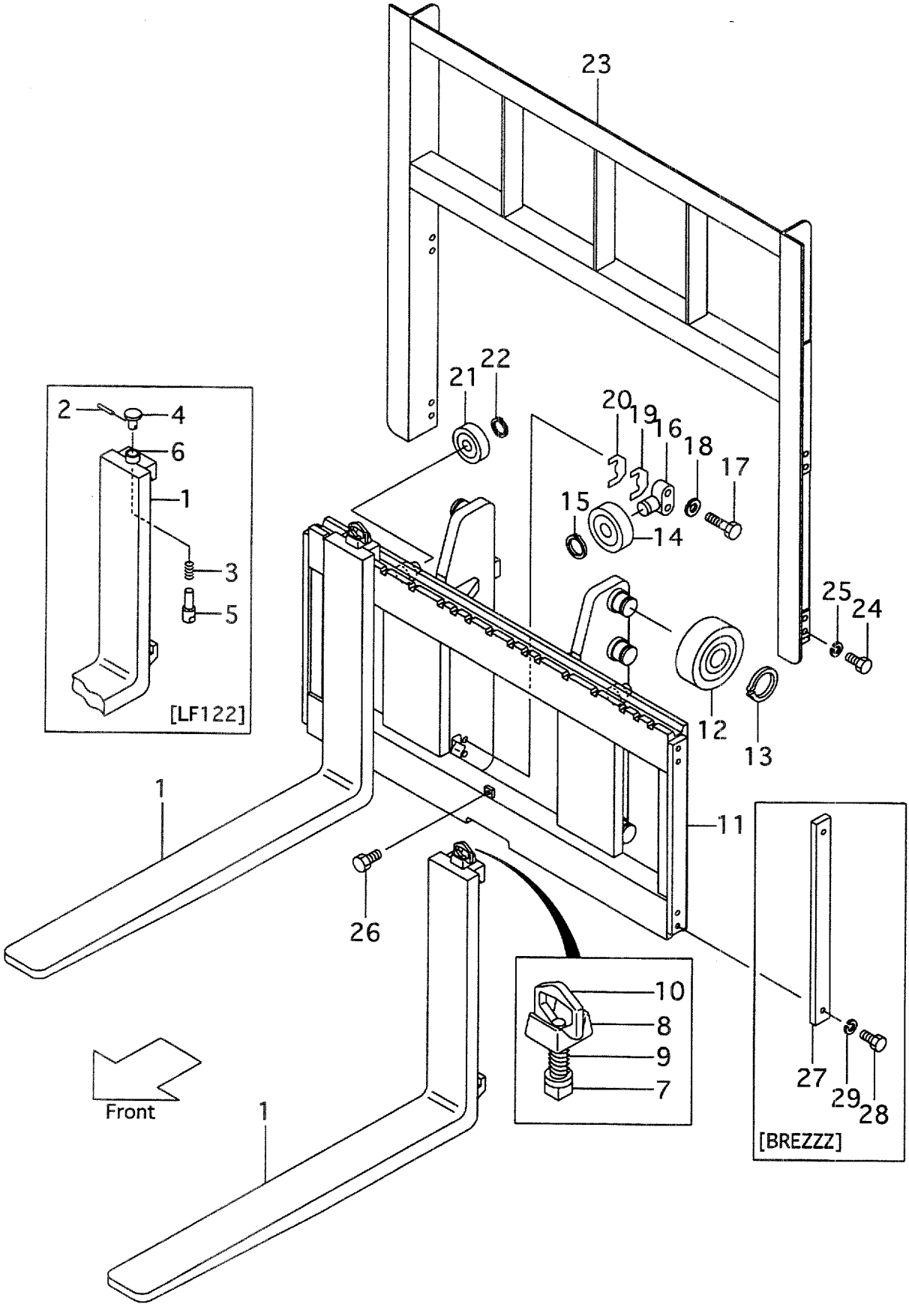

A:VFM35H(FD50,FG50)

Item No	Part No.	Mark	Description		Req'd	Remarks : Serial No.
1	25788-10103		FORK	ﾌｫｰｸ	2	(L=1220) INC.2-6
-	25788-10103		FORK	ﾌｫｰｸ	2	[LF122] INC.2-6
-	25788-10113		FORK	ﾌｫｰｸ	2	[LF137] INC.7-10
-	25788-10123		FORK	ﾌｫｰｸ	2	[LF152] INC.7-10
-	25788-10133		FORK	ﾌｫｰｸ	2	[LF167] INC.7-10
-	25788-10143		FORK	ﾌｫｰｸ	2	[LF182] INC.7-10
-	25788-10153		FORK	ﾌｫｰｸ	2	[LF197] INC.7-10
-	25788-10163		FORK	ﾌｫｰｸ	2	[LF212] INC.7-10
-	25788-10173		FORK	ﾌｫｰｸ	2	[LF227] INC.7-10
A1	25788-12501		STOPPER-ASSY,FORK	ｽﾄｯﾊﾟｱｯｾﾝ	2	[LF122] INC.2-6
2	25788-12511		PIN	ﾋﾟﾝ	2	[LF122]
3	25788-12521		SPRING	ｽﾌﾟﾘﾝｸﾞ	2	[LF122]
4	25788-12531		KNOB	ﾉﾌﾞ	2	[LF122]
5	25788-12541		PIN	ﾋﾟﾝ	2	[LF122]
6	25788-12551		SLEEVE	ｽﾘｰﾌﾞ	2	[LF122]
A2	25788-11001		STOPPER-ASSY,FORK	ｽﾄｯﾊﾟｱｯｾﾝ	2	INC.7-10
7	214J8-12011		STOPPER	ｽﾄｯﾊﾟ	2	
8	25788-12301		HEAD	ﾍｯﾄﾞ	2	
9	214J8-12031		SPRING	ｽﾌﾟﾘﾝｸﾞ	2	
10	214A8-12021		HANDLE	ﾊﾝﾄﾞﾙ	2	
11	235H0-60001		BRACKET,LIFT	ﾌﾞﾗｹｯﾄ	1	
-	235H0-61001		BRACKET,LIFT	ﾌﾞﾗｹｯﾄ	1	[LBR002]
-	235H1-61101		BRACKET,LIFT	ﾌﾞﾗｹｯﾄ	1	[WFX168][WFX183][WFX200]
-	235H1-61111		BRACKET,LIFT	ﾌﾞﾗｹｯﾄ	1	[WFX135][WFX138][WFX145] [WFX146][WFX154][WFX180]
-	235H1-61121		BRACKET,LIFT	ﾌﾞﾗｹｯﾄ	1	[LBR002/WFX168]
12	23818-20701		ROLLER,END,143.5	ﾛｰﾗ	6	
-	23958-22081		ROLLER,END	ﾛｰﾗ	(6)	
13	02100-00050		RING,SNAP	ｽﾅｯﾌﾟﾘﾝｸﾞ	6	
14	22198-22341		ROLLER,END,91.5	ﾛｰﾗ	2	
15	02100-00030		RING,SNAP	ｽﾅｯﾌﾟﾘﾝｸﾞ	2	
16	24609-42131		SHAFT	ｼｬﾌﾄ	2	
17	01103-16065		BOLT	ﾎﾞﾙﾄ	4	
18	02011-00016		WASHER	ﾜｯｼｬ	4	
19	24609-42151		SHIM,T-1.0	ｼﾑ	8	
20	24609-42161		SHIM,T-0.2	ｼﾑ	8	
21	22198-22341		ROLLER,END,91.5	ﾛｰﾗ	2	
-	22198-22341		ROLLER,END,91.5	ﾛｰﾗ	2	[WFX135][WFX138][WFX145] [WFX146][WFX154][WFX180]
-	22198-22341		ROLLER,END,91.5	ﾛｰﾗ	2	[LBR002][LBR002/WFX168]
-	24258-33401		ROLLER,END,92.0	ﾛｰﾗ	(2)	
-	24258-33401		ROLLER,END,92.0	ﾛｰﾗ	(2)	[WFX135][WFX138][WFX145] [WFX146][WFX154][WFX180]
-	24258-33401		ROLLER,END,92.0	ﾛｰﾗ	(2)	[LBR002][LBR002/WFX168]
22	02100-00030		RING,SNAP	ｽﾅｯﾌﾟﾘﾝｸﾞ	2	
-	02100-00030		RING,SNAP	ｽﾅｯﾌﾟﾘﾝｸﾞ	2	[WFX135][WFX138][WFX145] [WFX146][WFX154][WFX180]
-	02100-00030		RING,SNAP	ｽﾅｯﾌﾟﾘﾝｸﾞ	2	[LBR002][LBR002/WFX168]
23	235H8-22301		BRACKET	ﾌﾞﾗｹｯﾄ	1	
-	535H2-71001		BRACKET	ﾌﾞﾗｹｯﾄ	1	[EXA][EXC]

FIG.199 FORK & LIFT BRACKET [VFM35H]

(M4040630) フォーク & リフトブラケット

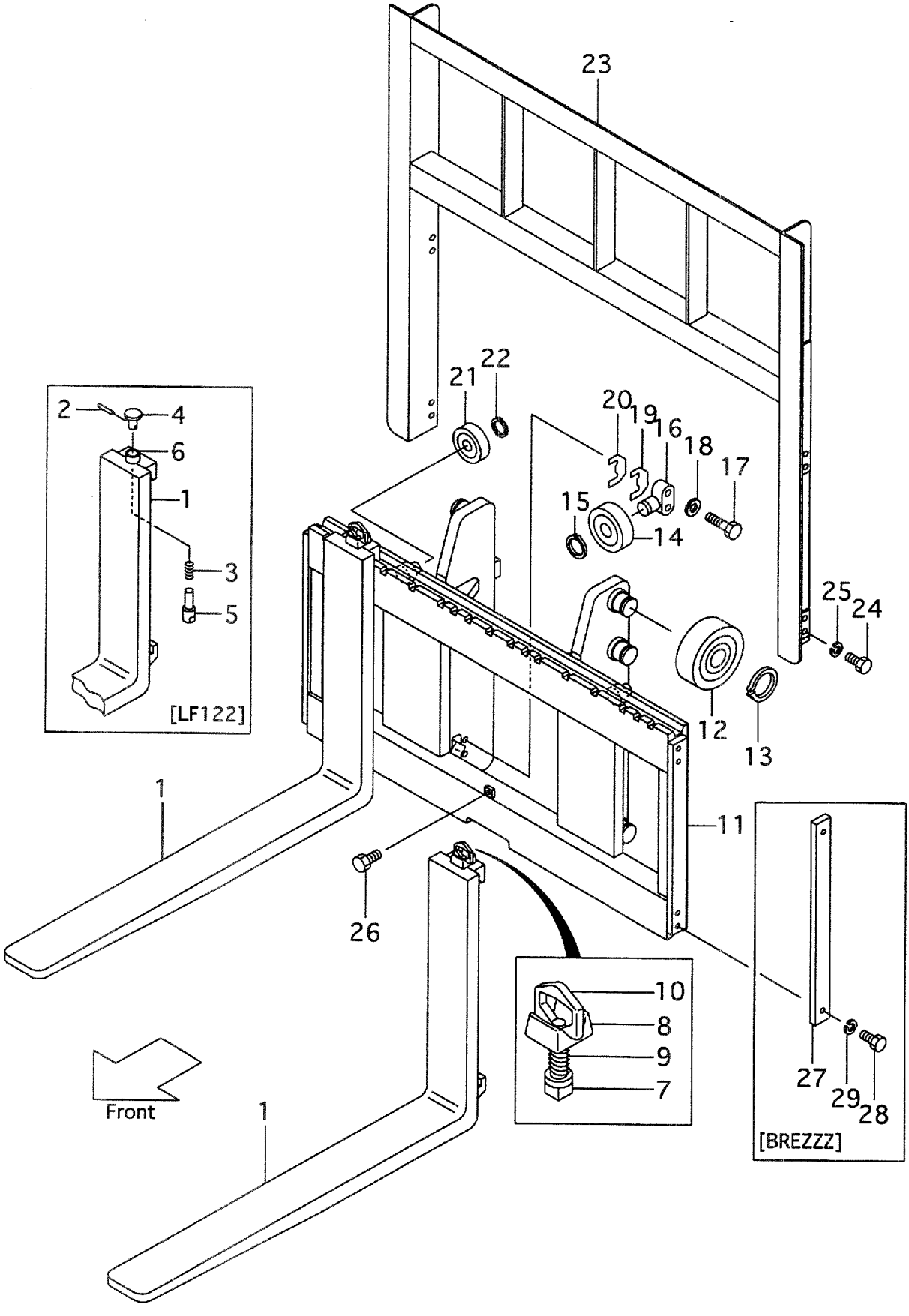

A:VFM35H(FD50,FG50)

Item No	Part No.	Mark	Description		Req'd	Remarks : Serial No.
-	535H1-61301		BRACKET	ﾌﾞﾗｹｯﾄ	1	[WFX168][WBR]
-	535H1-61311		BRACKET	ﾌﾞﾗｹｯﾄ	1	[WFX180][WWB]
24	01103-14030		BOLT	ﾎﾞﾙﾄ	8	
25	02011-00014		WASHER	ﾜｯｼｬ	8	
26	01184-12025		BOLT & WASHER	ﾎﾞﾙﾄ&ﾜｯｼｬ	1	
27	22650-92122		PLATE	ﾌﾟﾚｰﾄ	2	[BREZZZ]
28	01103-14025		BOLT	ﾎﾞﾙﾄ	4	[BREZZZ]
29	02011-00014		WASHER	ﾜｯｼｬ	4	[BREZZZ]

FIG.200 MAST [VFM35H]

(M4040430) マスト

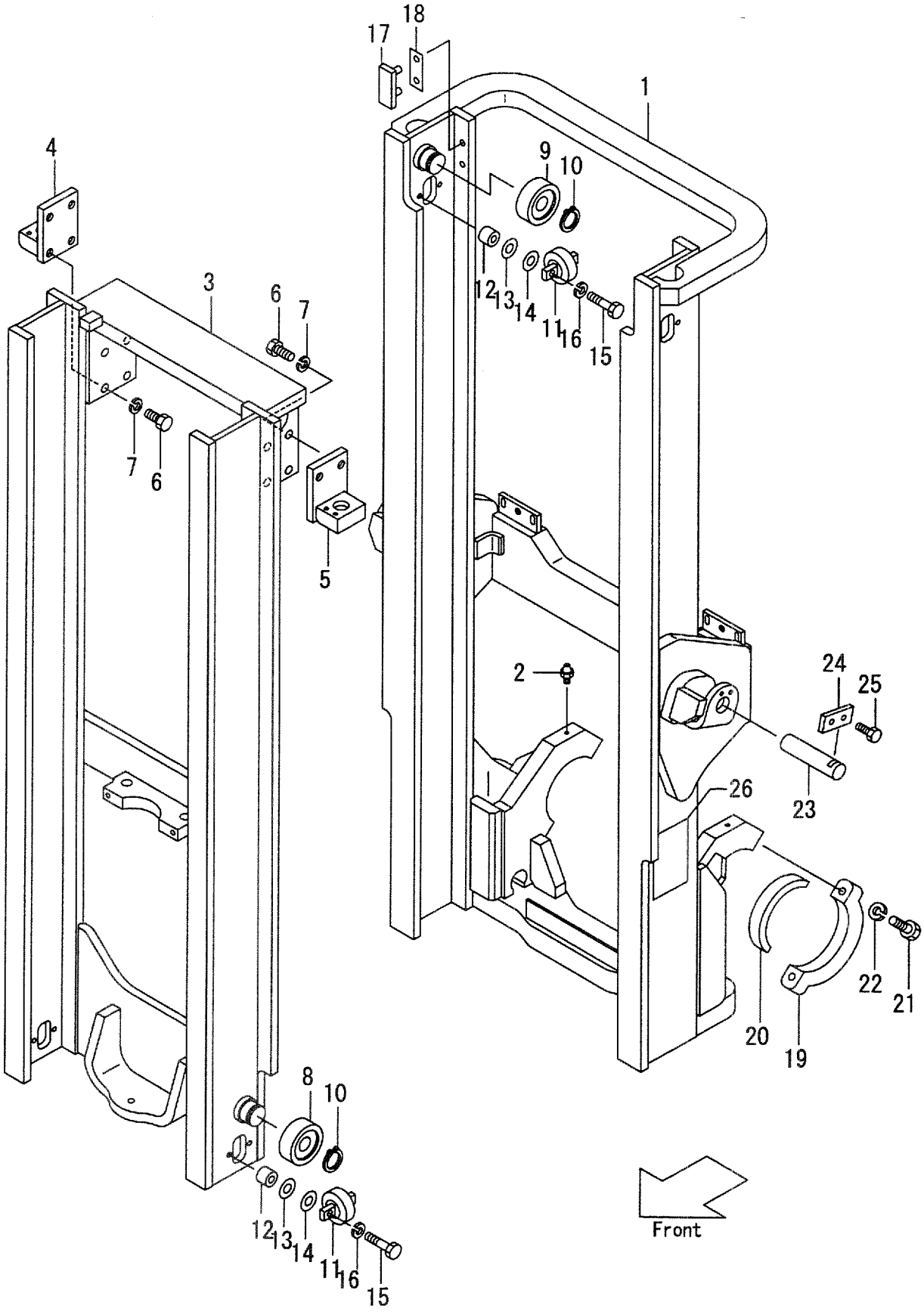

A:VFM35H(FD50,FG50)

Item No	Part No.	Mark	Description	Req'd	Remarks : Serial No.
1	235H0-40011		MAST,OUTER VFM250 アウタマスト	1	MAST NO.1-9
-	235H0-40012		MAST,OUTER VFM250 アウタマスト	1	MAST NO.10-
-	235H0-40021		MAST,OUTER VFM270 アウタマスト	1	MAST NO.1-9
-	235H0-40022		MAST,OUTER VFM270 アウタマスト	1	MAST NO.10-
-	235H0-40031		MAST,OUTER VFM275 アウタマスト	1	MAST NO.1-9
-	235H0-40032		MAST,OUTER VFM275 アウタマスト	1	MAST NO.10-
-	235H0-40001		MAST,OUTER VFM300 アウタマスト	1	MAST NO.1-9
-	235H0-40002		MAST,OUTER VFM300 アウタマスト	1	MAST NO.10-
-	235H0-40041		MAST,OUTER VFM325 アウタマスト	1	MAST NO.1-9
-	235H0-40042		MAST,OUTER VFM325 アウタマスト	1	MAST NO.10-
-	235H0-40051		MAST,OUTER VFM330 アウタマスト	1	MAST NO.1-9
-	235H0-40052		MAST,OUTER VFM330 アウタマスト	1	MAST NO.10-
-	235H0-40061		MAST,OUTER VFM350 アウタマスト	1	MAST NO.1-9
-	235H0-40062		MAST,OUTER VFM350 アウタマスト	1	MAST NO.10-
-	235H0-40071		MAST,OUTER VFM366 アウタマスト	1	MAST NO.1-9
-	235H0-40072		MAST,OUTER VFM366 アウタマスト	1	MAST NO.10-
-	235H0-40081		MAST,OUTER VFM370 アウタマスト	1	MAST NO.1-9
-	235H0-40082		MAST,OUTER VFM370 アウタマスト	1	MAST NO.10-
-	235H0-40091		MAST,OUTER VFM375 アウタマスト	1	MAST NO.1-9
-	235H0-40092		MAST,OUTER VFM375 アウタマスト	1	MAST NO.10-
-	235H0-40101		MAST,OUTER VFM400 アウタマスト	1	MAST NO.1-9
-	235H0-40102		MAST,OUTER VFM400 アウタマスト	1	MAST NO.10-
-	235H0-40111		MAST,OUTER VFM425 アウタマスト	1	MAST NO.1-9
-	235H0-40112		MAST,OUTER VFM425 アウタマスト	1	MAST NO.10-
-	235H0-40121		MAST,OUTER VFM450 アウタマスト	1	MAST NO.1-9
-	235H0-40122		MAST,OUTER VFM450 アウタマスト	1	MAST NO.10-
-	235H0-40131		MAST,OUTER VFM475 アウタマスト	1	MAST NO.1-9
-	235H0-40132		MAST,OUTER VFM475 アウタマスト	1	MAST NO.10-
-	235H0-40141		MAST,OUTER VFM500 アウタマスト	1	MAST NO.1-9
-	235H0-40142		MAST,OUTER VFM500 アウタマスト	1	MAST NO.10-
-	235H0-40151		MAST,OUTER VFM550 アウタマスト	1	MAST NO.1-9
-	235H0-40152		MAST,OUTER VFM550 アウタマスト	1	MAST NO.10-
-	235H0-40161		MAST,OUTER VFM600 アウタマスト	1	MAST NO.1-9
-	235H0-40162		MAST,OUTER VFM600 アウタマスト	1	MAST NO.10-
-	535H3-91411		MAST,OUTER VFM250 アウタマスト	1	MAST NO.1-9 [RW][HC][EXR]
-	535H3-91412		MAST,OUTER VFM250 アウタマスト	1	MAST NO.10- [RW][HC][EXR]
-	535H3-91421		MAST,OUTER VFM270 アウタマスト	1	MAST NO.1-9 [RW][HC][EXR]
-	535H3-91422		MAST,OUTER VFM270 アウタマスト	1	MAST NO.10- [RW][HC][EXR]
-	535H3-91431		MAST,OUTER VFM275 アウタマスト	1	MAST NO.1-9 [RW][HC][EXR]
-	535H3-91432		MAST,OUTER VFM275 アウタマスト	1	MAST NO.10- [RW][HC][EXR]
-	535H3-91401		MAST,OUTER VFM300 アウタマスト	1	MAST NO.1-9 [RW][HC][EXR]
-	535H3-91402		MAST,OUTER VFM300 アウタマスト	1	MAST NO.10- [RW][HC][EXR]

FIG.200 MAST [VFM35H]

(M4040430) マスト

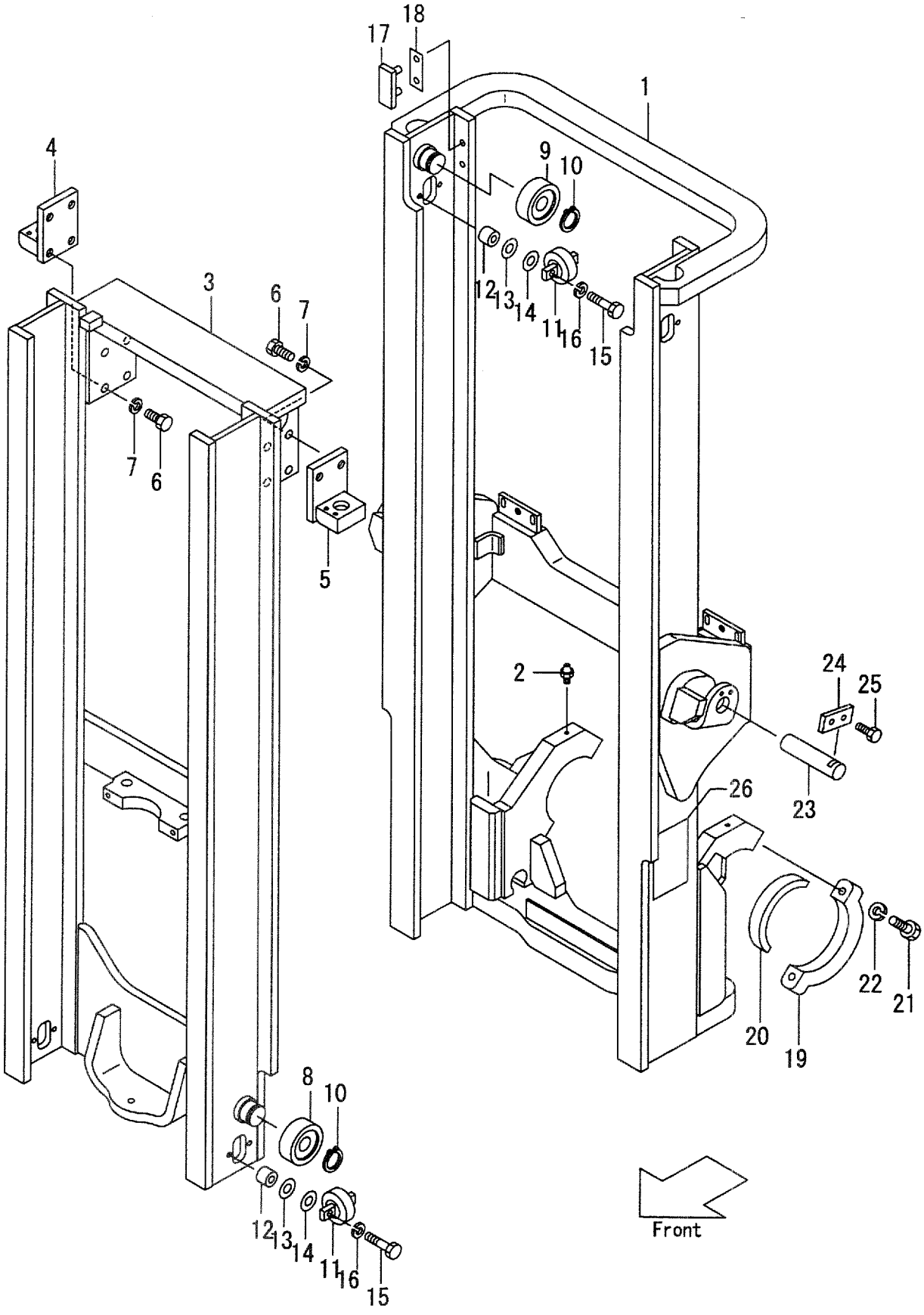

A:VFM35H(FD50,FG50)

Item No	Part No.	Mark	Description	Req'd	Remarks : Serial No.
-	535H3-91441		MAST,OUTER VFM325 アウタマスト	1	MAST NO.1-9 [RW][HC][EXR]
-	535H3-91442		MAST,OUTER VFM325 アウタマスト	1	MAST NO.10- [RW][HC][EXR]
-	535H3-91451		MAST,OUTER VFM330 アウタマスト	1	MAST NO.1-9 [RW][HC][EXR]
-	535H3-91452		MAST,OUTER VFM330 アウタマスト	1	MAST NO.10- [RW][HC][EXR]
-	535H3-91461		MAST,OUTER VFM350 アウタマスト	1	MAST NO.1-9 [RW][HC][EXR]
-	535H3-91462		MAST,OUTER VFM350 アウタマスト	1	MAST NO.10- [RW][HC][EXR]
-	535H3-91471		MAST,OUTER VFM366 アウタマスト	1	MAST NO.1-9 [RW][HC][EXR]
-	535H3-91472		MAST,OUTER VFM366 アウタマスト	1	MAST NO.10- [RW][HC][EXR]
-	535H3-91481		MAST,OUTER VFM370 アウタマスト	1	MAST NO.1-9 [RW][HC][EXR]
-	535H3-91482		MAST,OUTER VFM370 アウタマスト	1	MAST NO.10- [RW][HC][EXR]
-	535H3-91491		MAST,OUTER VFM375 アウタマスト	1	MAST NO.1-9 [RW][HC][EXR]
-	535H3-91492		MAST,OUTER VFM375 アウタマスト	1	MAST NO.10- [RW][HC][EXR]
-	535H3-91501		MAST,OUTER VFM400 アウタマスト	1	MAST NO.1-9 [RW][HC][EXR]
-	535H3-91502		MAST,OUTER VFM400 アウタマスト	1	MAST NO.10- [RW][HC][EXR]
-	535H3-91511		MAST,OUTER VFM425 アウタマスト	1	MAST NO.1-9 [RW][HC][EXR]
-	535H3-91512		MAST,OUTER VFM425 アウタマスト	1	MAST NO.10- [RW][HC][EXR]
-	535H3-91521		MAST,OUTER VFM450 アウタマスト	1	MAST NO.1-9 [RW][HC][EXR]
-	535H3-91522		MAST,OUTER VFM450 アウタマスト	1	MAST NO.10- [RW][HC][EXR]
-	535H3-91531		MAST,OUTER VFM475 アウタマスト	1	MAST NO.1-9 [RW][HC][EXR]
-	535H3-91532		MAST,OUTER VFM475 アウタマスト	1	MAST NO.10- [RW][HC][EXR]
-	535H3-91541		MAST,OUTER VFM500 アウタマスト	1	MAST NO.1-9 [RW][HC][EXR]
-	535H3-91542		MAST,OUTER VFM500 アウタマスト	1	MAST NO.10- [RW][HC][EXR]
-	535H3-91551		MAST,OUTER VFM550 アウタマスト	1	MAST NO.1-9 [RW][HC][EXR]
-	535H3-91552		MAST,OUTER VFM550 アウタマスト	1	MAST NO.10- [RW][HC][EXR]
-	535H3-91561		MAST,OUTER VFM600 アウタマスト	1	MAST NO.1-9 [RW][HC][EXR]

FIG.200 MAST [VFM35H]

(M4040430) マスト

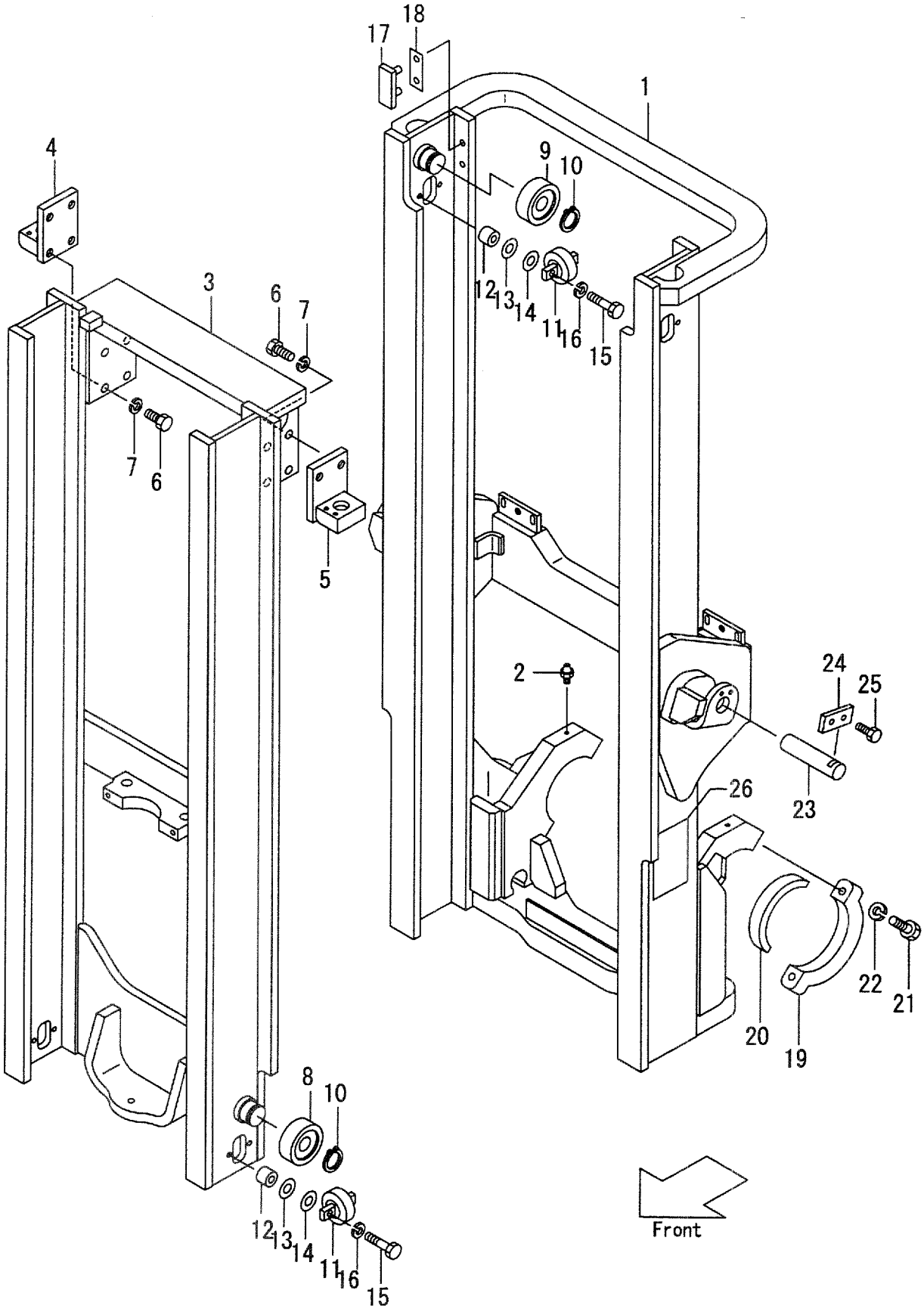

A:VFM35H(FD50,FG50)

Item No	Part No.	Mark	Description		Req'd	Remarks : Serial No.
-	535H3-91562		MAST,OUTER VFM600	ｱｳﾀﾏｽﾄ	1	MAST NO.10- [RW][HC][EXR]
2	04901-00160		FITTING	ﾌｨｯﾃｨﾝｸﾞ	2	
3	235H0-40201		MAST,INNER VFM250	ｲﾝﾅﾏｽﾄ	1	MAST NO.1-9
-	235H0-40202		MAST,INNER VFM250	ｲﾝﾅﾏｽﾄ	1	MAST NO.10-
-	235H0-40211		MAST,INNER VFM270	ｲﾝﾅﾏｽﾄ	1	MAST NO.1-9
-	235H0-40212		MAST,INNER VFM270	ｲﾝﾅﾏｽﾄ	1	MAST NO.10-
-	235H0-40221		MAST,INNER VFM275	ｲﾝﾅﾏｽﾄ	1	MAST NO.1-9
-	235H0-40222		MAST,INNER VFM275	ｲﾝﾅﾏｽﾄ	1	MAST NO.10-
-	228C0-40241		MAST,INNER VFM300	ｲﾝﾅﾏｽﾄ	1	MAST NO.1-9
-	228C0-40242		MAST,INNER VFM300	ｲﾝﾅﾏｽﾄ	1	MAST NO.10-
-	228C0-40261		MAST,INNER VFM325	ｲﾝﾅﾏｽﾄ	1	MAST NO.1-9
-	228C0-40262		MAST,INNER VFM325	ｲﾝﾅﾏｽﾄ	1	MAST NO.10-
-	235H0-40231		MAST,INNER VFM330	ｲﾝﾅﾏｽﾄ	1	MAST NO.1-9
-	235H0-40232		MAST,INNER VFM330	ｲﾝﾅﾏｽﾄ	1	MAST NO.10-
-	228C0-40291		MAST,INNER VFM350	ｲﾝﾅﾏｽﾄ	1	MAST NO.1-9
-	228C0-40292		MAST,INNER VFM350	ｲﾝﾅﾏｽﾄ	1	MAST NO.10-
-	235H0-40241		MAST,INNER VFM366	ｲﾝﾅﾏｽﾄ	1	MAST NO.1-9
-	235H0-40242		MAST,INNER VFM366	ｲﾝﾅﾏｽﾄ	1	MAST NO.10-
-	235H0-40251		MAST,INNER VFM370	ｲﾝﾅﾏｽﾄ	1	MAST NO.1-9
-	235H0-40252		MAST,INNER VFM370	ｲﾝﾅﾏｽﾄ	1	MAST NO.10-
-	235H0-40261		MAST,INNER VFM375	ｲﾝﾅﾏｽﾄ	1	MAST NO.1-9
-	235H0-40262		MAST,INNER VFM375	ｲﾝﾅﾏｽﾄ	1	MAST NO.10-
-	228C0-40311		MAST,INNER VFM400	ｲﾝﾅﾏｽﾄ	1	MAST NO.1-9
-	228C0-40312		MAST,INNER VFM400	ｲﾝﾅﾏｽﾄ	1	MAST NO.10-
-	228C0-40321		MAST,INNER VFM425	ｲﾝﾅﾏｽﾄ	1	MAST NO.1-9
-	228C0-40322		MAST,INNER VFM425	ｲﾝﾅﾏｽﾄ	1	MAST NO.10-
-	228C0-40331		MAST,INNER VFM450	ｲﾝﾅﾏｽﾄ	1	MAST NO.1-9
-	228C0-40332		MAST,INNER VFM450	ｲﾝﾅﾏｽﾄ	1	MAST NO.10-
-	228C0-40341		MAST,INNER VFM475	ｲﾝﾅﾏｽﾄ	1	MAST NO.1-9
-	228C0-40342		MAST,INNER VFM475	ｲﾝﾅﾏｽﾄ	1	MAST NO.10-
-	235H0-40271		MAST,INNER VFM500	ｲﾝﾅﾏｽﾄ	1	MAST NO.1-9
-	235H0-40272		MAST,INNER VFM500	ｲﾝﾅﾏｽﾄ	1	MAST NO.10-
-	235H0-40281		MAST,INNER VFM550	ｲﾝﾅﾏｽﾄ	1	MAST NO.1-9
-	235H0-40282		MAST,INNER VFM550	ｲﾝﾅﾏｽﾄ	1	MAST NO.10-
-	235H0-40291		MAST,INNER VFM600	ｲﾝﾅﾏｽﾄ	1	MAST NO.1-9
-	235H0-40292		MAST,INNER VFM600	ｲﾝﾅﾏｽﾄ	1	MAST NO.10-
4	224T0-43001		HEAD,PISTON,RH	ﾍｯﾄﾞ	1	
5	224T0-43051		HEAD,PISTON,LH	ﾍｯﾄﾞ	1	
6	01103-20045		BOLT	ﾎﾞﾙﾄ	8	
7	02011-00020		WASHER	ﾜｯｼｬ	8	
8	23818-20701		ROLLER,END,143.5	ﾛｰﾗ	2	
-	23958-22081		ROLLER,END,144	ﾛｰﾗ	(2)	
9	23818-20701		ROLLER,END,143.5	ﾛｰﾗ	2	
10	02100-00050		RING,SNAP	ｽﾅｯﾌﾟﾘﾝｸﾞ	4	
11	23818-30301		ROLLER,SIDE	ﾛｰﾗ	4	
12	23818-30071		SPACER	ｽﾍﾟｰｻ	8	MAST NO.1-9
-	224T8-31111		SPACER	ｽﾍﾟｰｻ	8	MAST NO.10-
13	22548-34051		SHIM,T-0.5	ｼﾑ	16	
14	22548-34061		SHIM,T-1.0	ｼﾑ	8	

FIG.200 MAST [VFM35H]

(M4040430) マスト

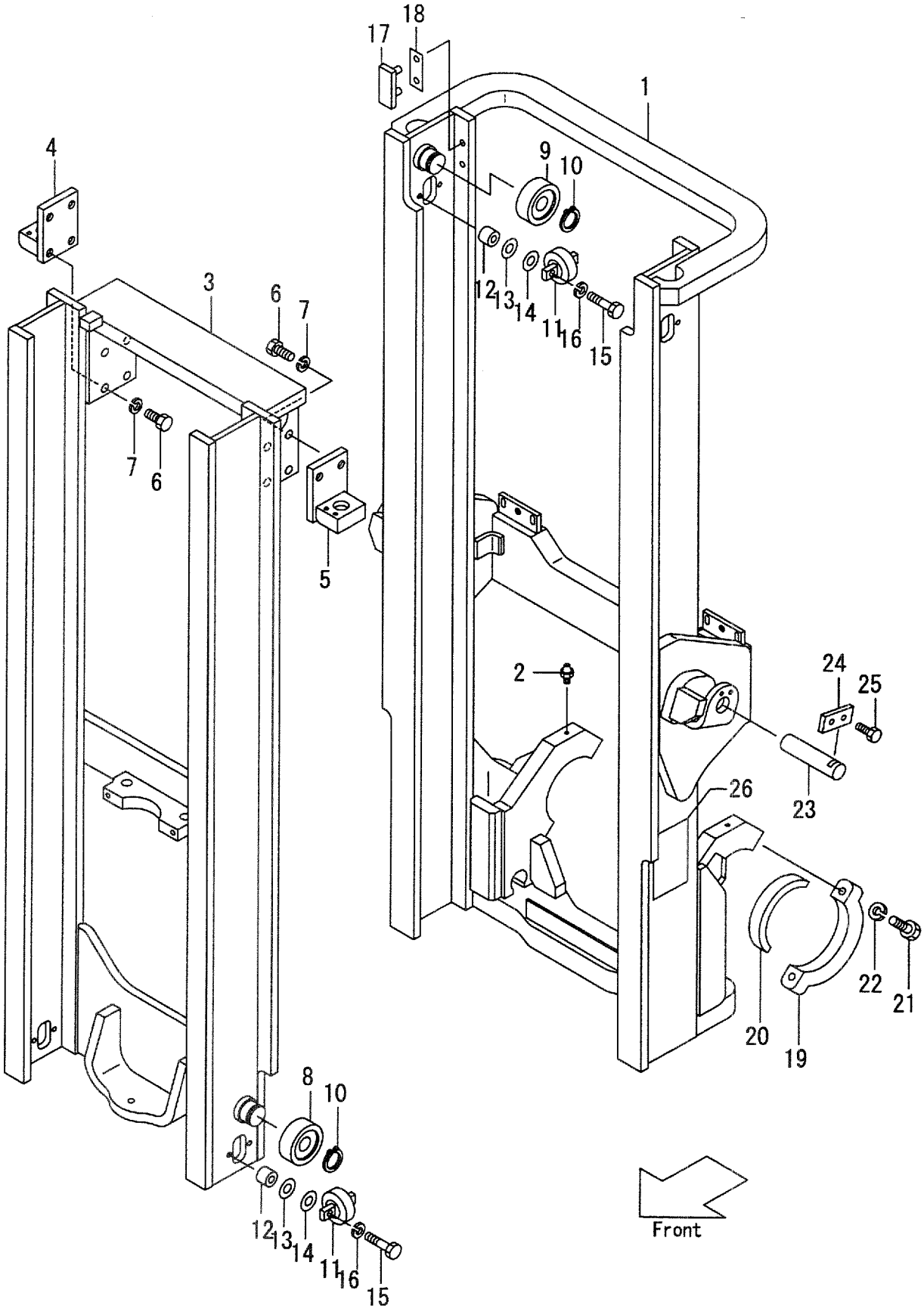

A:VFM35H(FD50,FG50)

Item No	Part No.	Mark	Description		Req'd	Remarks : Serial No.
15	01100-12045		BOLT	ﾎﾞﾙﾄ	8	
16	02010-00012		WASHER	ﾜｯｼｬ	8	
17	22678-32001		SLIPPER,T-4	ｽﾘｯﾊﾟ	2	
18	22679-43231		SHIM,T-0.5	ｼﾑ	4	
19	224T8-02201		CAP	ｷｬｯﾌﾟ	2	
20	224T8-02001		BUSHING	ﾌﾞｯｼﾝｸﾞ	2	
21	01103-20085		BOLT	ﾎﾞﾙﾄ	4	
22	02010-00020		WASHER	ﾜｯｼｬ	4	
23	224T8-52501		PIN	ﾋﾟﾝ	2	
24	23648-50161		PLATE	ﾌﾟﾚｰﾄ	2	
25	01184-10020		BOLT	ﾎﾞﾙﾄ	4	
26	23678-06002		PLATE,NAME	ﾌﾟﾚｰﾄ	1	

FIG.201 LAMP GUARD [(HL,BKH)/VFM35H]

(M40483E0) ﾗﾝﾌﾟｶﾞｰﾄﾞ

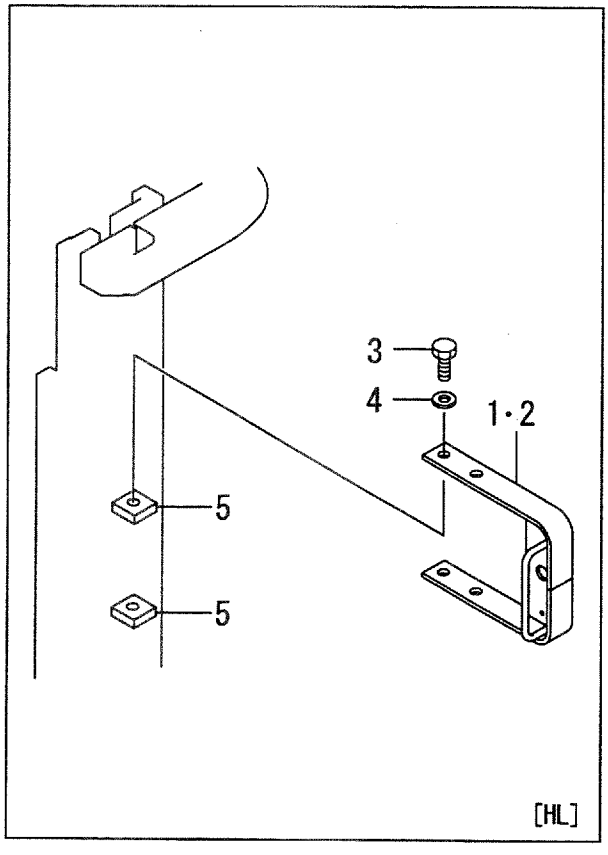

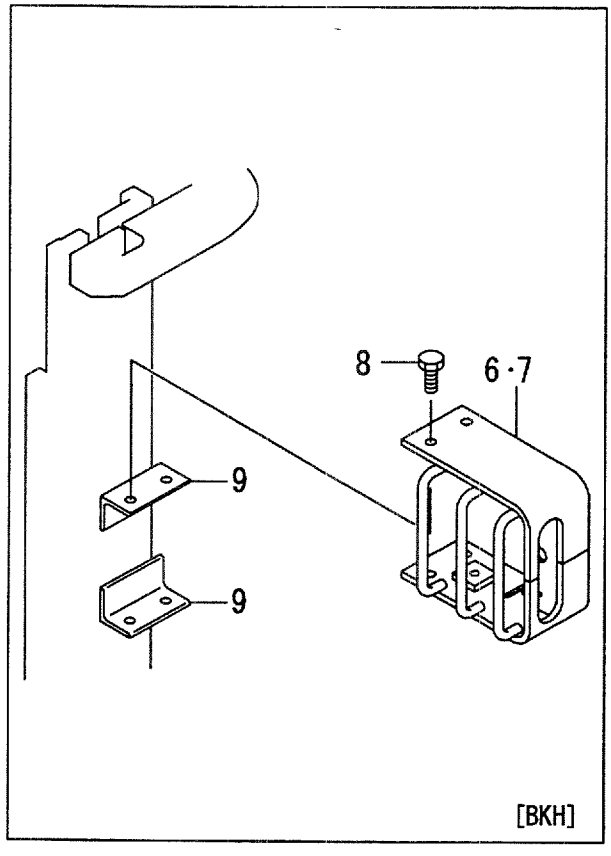

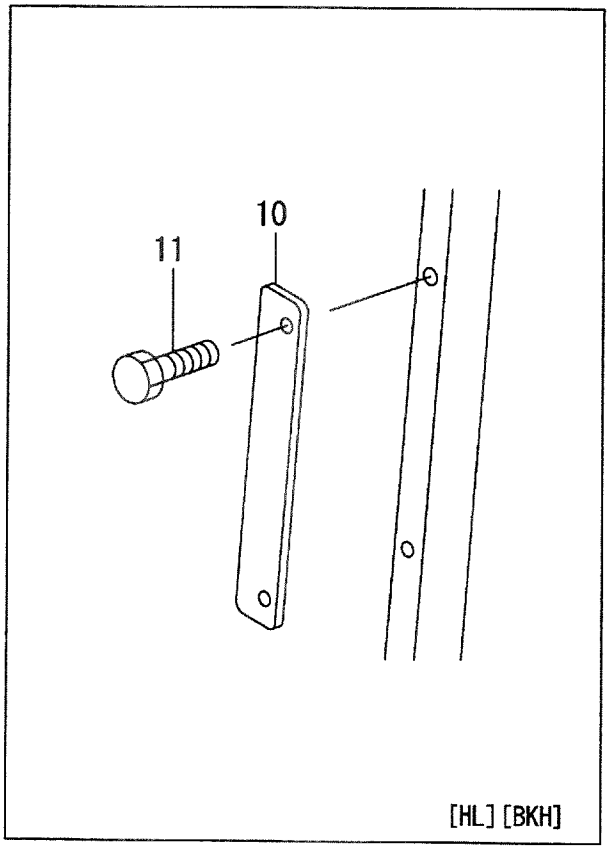

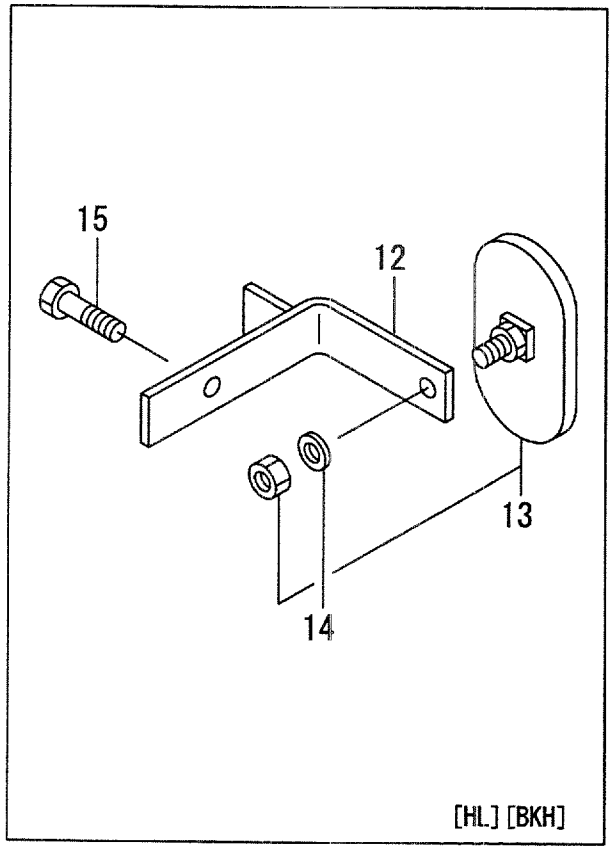

A:VFM35H(FD50,FG50)

Item No	Part No.	Mark	Description		Req'd	Remarks : Serial No.
1	534A9-22011		BRACKET,LH	ﾌﾞﾗｹｯﾄ	1	[HL]
2	534A9-22001		BRACKET,RH	ﾌﾞﾗｹｯﾄ	1	[HL]
3	01100-12020		BOLT	ﾎﾞﾙﾄ	4	[HL]
4	02010-00012		WASHER	ﾜｯｼｬ	4	[HL]
5	534A9-22101		BLOCK,TAPPED	ﾌﾞﾛｯｸ	4	[HL]
6	534A4-22011		GUARD,LH	ｶﾞｰﾄﾞ	1	[BKH]
7	534A4-22001		GUARD,RH	ｶﾞｰﾄﾞ	1	[BKH]
8	01184-12020		BOLT & WASHER	ﾎﾞﾙﾄ&ﾜｯｼｬ	8	[BKH]
9	534A4-22101		BRACKET	ﾌﾞﾗｹｯﾄ	4	[BKH]
10	534A9-22301		PLATE	ﾌﾟﾚｰﾄ	2	[HL][BKH]
11	01100-08012		BOLT	ﾎﾞﾙﾄ	4	[HL][BKH]
12	535C9-22401		BRACKET	ﾌﾞﾗｹｯﾄ	2	[HL][BKH]
13	556C9-92091		MIRROR	ﾐﾗｰ	2	[HL][BKH]
14	222A9-32011		WASHER	ﾜｯｼｬ	2	[HL][BKH]
15	514A5-12021		BOLT	ﾎﾞﾙﾄ	2	[HL][BKH]
16	535C9-22301	+	WIRE-HARNESS	ﾜｲﾔﾊｰﾈｽ	2	[HL][BKH]
17	27732-42221	+	CLAMP	ｸﾗﾝﾌﾟ	4	[HL][BKH]
18	04913-11380	+	BAND	ﾊﾞﾝﾄﾞ	6	[HL][BKH]

FIG.202 TILT GAUGE [TG/VFM35H]

(M40483F0) ﾃｨﾙﾄｹﾞｰｼﾞ

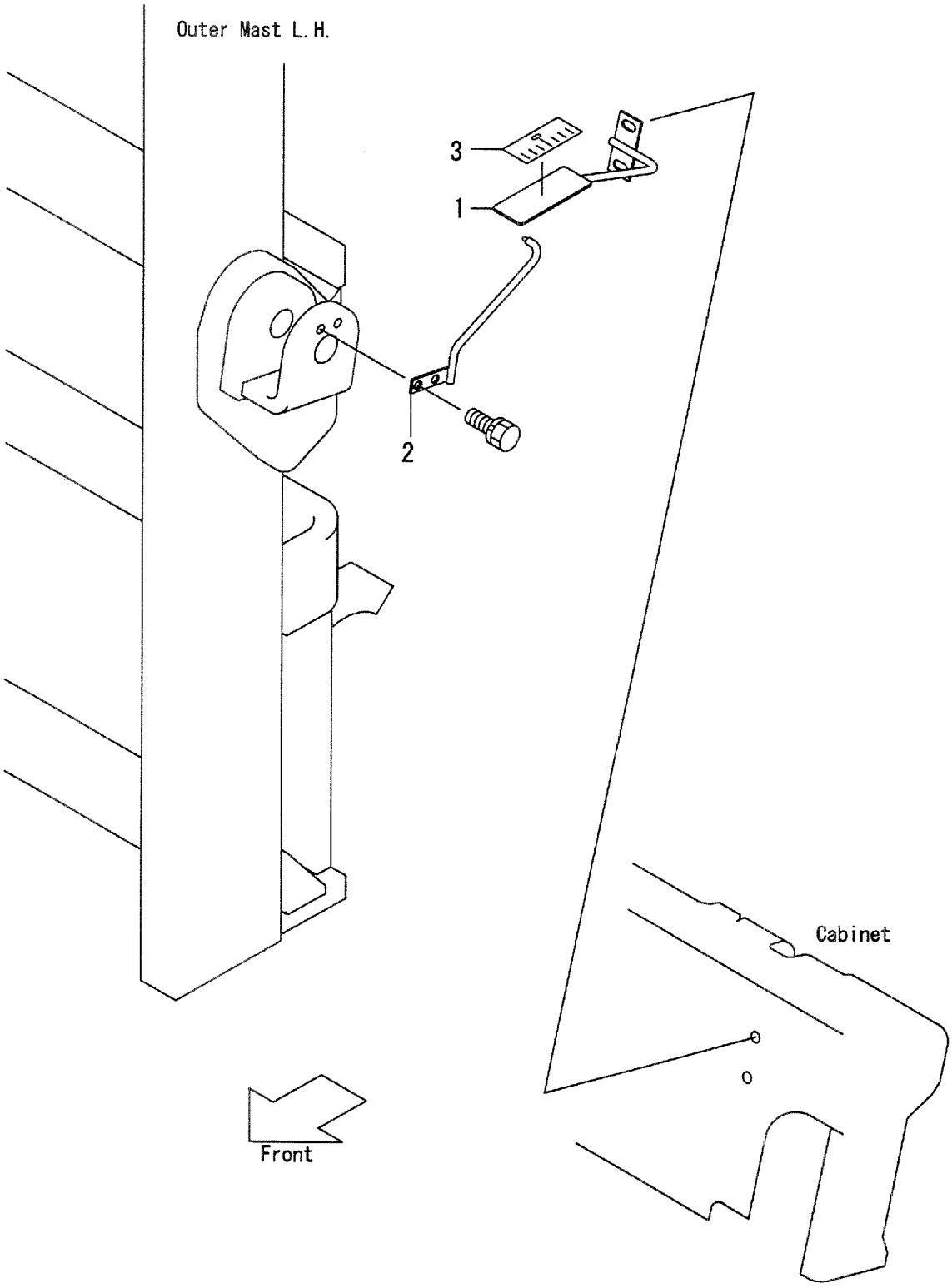

A:VFM35H(FD50,FG50)

Item No	Part No.	Mark	Description		Req'd	Remarks : Serial No.
1	635H0-10011		GAUGE,TILT	ｹﾞｰｼﾞ	1	[TG]
2	635H0-10051		INDICATOR	ｲﾝｼﾞｹｰﾀ	1	[TG]
3	62459-23371		SEAL	ｼｰﾙ	1	[TG]

FIG.203 LIFT CYLINDER (FRONT)[VFM35H]

(M4040570) リフトシリンダ

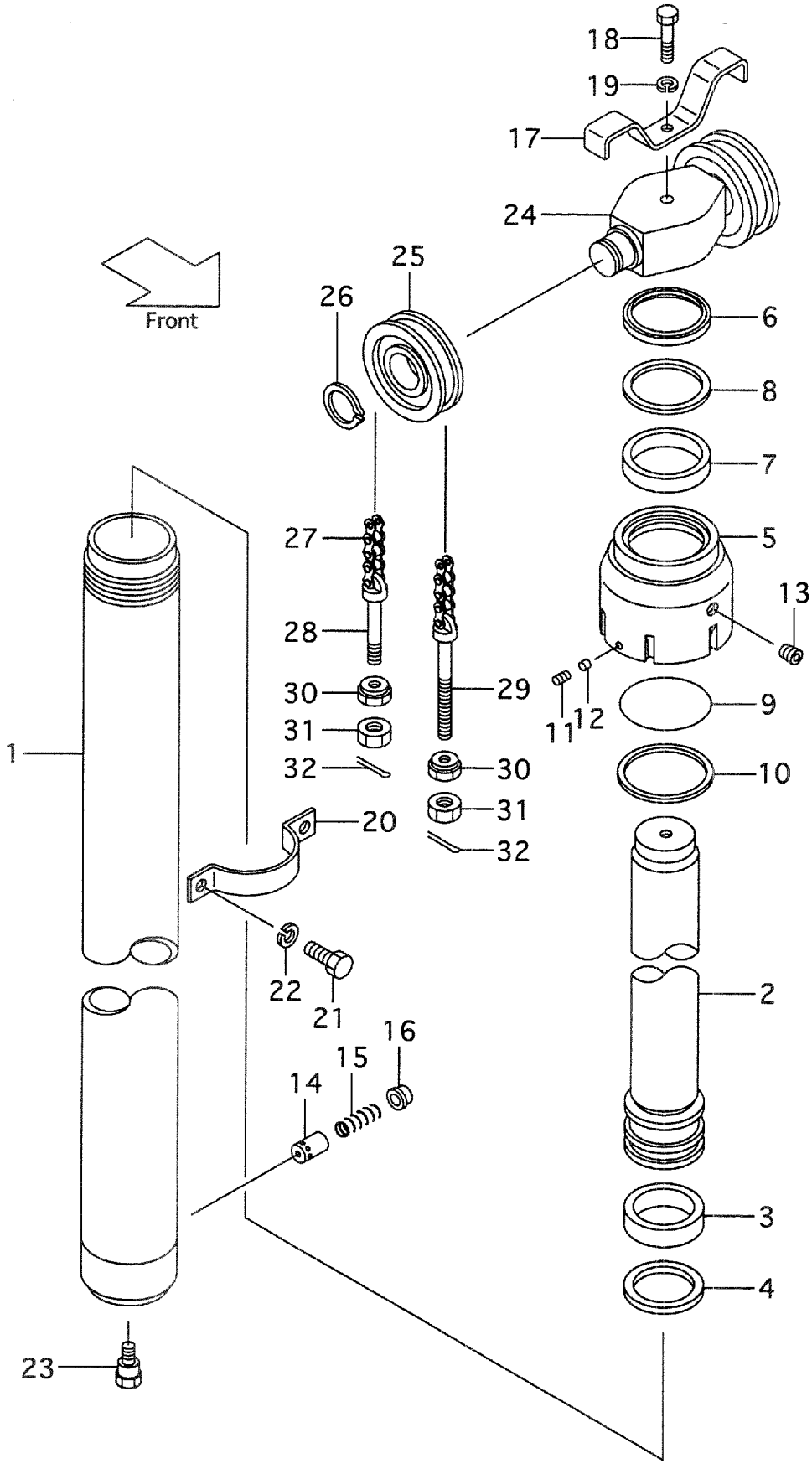

A : VFM35H (FD50, FG50)

Item No	Part No.	Mark	Description	Req'd	Remarks : Serial No.
A1	228C0-50011		CYL-ASSY,LIFT VFM250 ﾘﾌﾄｼﾘﾝﾀﾞｱｯｾﾝ	1	MAST NO.1-5 INC.1-16
-	228C0-50012		CYL-ASSY,LIFT VFM250 ﾘﾌﾄｼﾘﾝﾀﾞｱｯｾﾝ	1	MAST NO.6- INC.1-16
-	228C0-80021		CYL-ASSY,LIFT VFM270 ﾘﾌﾄｼﾘﾝﾀﾞｱｯｾﾝ	1	MAST NO.1-5 INC.1-16
-	228C0-80022		CYL-ASSY,LIFT VFM270 ﾘﾌﾄｼﾘﾝﾀﾞｱｯｾﾝ	1	MAST NO.6- INC.1-16
-	228C0-50021		CYL-ASSY,LIFT VFM275 ﾘﾌﾄｼﾘﾝﾀﾞｱｯｾﾝ	1	MAST NO.1-5 INC.1-16
-	228C0-50022		CYL-ASSY,LIFT VFM275 ﾘﾌﾄｼﾘﾝﾀﾞｱｯｾﾝ	1	MAST NO.6- INC.1-16
-	228C0-50001		CYL-ASSY,LIFT VFM300 ﾘﾌﾄｼﾘﾝﾀﾞｱｯｾﾝ	1	MAST NO.1-5 INC.1-16
-	228C0-50002		CYL-ASSY,LIFT VFM300 ﾘﾌﾄｼﾘﾝﾀﾞｱｯｾﾝ	1	MAST NO.6- INC.1-16
-	228C0-80031		CYL-ASSY,LIFT VFM325 ﾘﾌﾄｼﾘﾝﾀﾞｱｯｾﾝ	1	MAST NO.1-5 INC.1-16
-	228C0-80032		CYL-ASSY,LIFT VFM325 ﾘﾌﾄｼﾘﾝﾀﾞｱｯｾﾝ	1	MAST NO.6- INC.1-16
-	228C0-50031		CYL-ASSY,LIFT VFM330 ﾘﾌﾄｼﾘﾝﾀﾞｱｯｾﾝ	1	MAST NO.1-5 INC.1-16
-	228C0-50032		CYL-ASSY,LIFT VFM330 ﾘﾌﾄｼﾘﾝﾀﾞｱｯｾﾝ	1	MAST NO.6- INC.1-16
-	228C0-50041		CYL-ASSY,LIFT VFM350 ﾘﾌﾄｼﾘﾝﾀﾞｱｯｾﾝ	1	MAST NO.1-5 INC.1-16
-	228C0-50042		CYL-ASSY,LIFT VFM350 ﾘﾌﾄｼﾘﾝﾀﾞｱｯｾﾝ	1	MAST NO.6- INC.1-16
-	228C0-80051		CYL-ASSY,LIFT VFM366 ﾘﾌﾄｼﾘﾝﾀﾞｱｯｾﾝ	1	MAST NO.1-5 INC.1-16
-	228C0-80052		CYL-ASSY,LIFT VFM366 ﾘﾌﾄｼﾘﾝﾀﾞｱｯｾﾝ	1	MAST NO.6- INC.1-16
-	228C0-50051		CYL-ASSY,LIFT VFM370 ﾘﾌﾄｼﾘﾝﾀﾞｱｯｾﾝ	1	MAST NO.1-5 INC.1-16
-	228C0-50052		CYL-ASSY,LIFT VFM370 ﾘﾌﾄｼﾘﾝﾀﾞｱｯｾﾝ	1	MAST NO.6- INC.1-16
-	228C0-50061		CYL-ASSY,LIFT VFM375 ﾘﾌﾄｼﾘﾝﾀﾞｱｯｾﾝ	1	MAST NO.1-5 INC.1-16
-	228C0-50062		CYL-ASSY,LIFT VFM375 ﾘﾌﾄｼﾘﾝﾀﾞｱｯｾﾝ	1	MAST NO.6- INC.1-16
-	228C0-80071		CYL-ASSY,LIFT VFM400 ﾘﾌﾄｼﾘﾝﾀﾞｱｯｾﾝ	1	MAST NO.1-5 INC.1-16
-	228C0-80072		CYL-ASSY,LIFT VFM400 ﾘﾌﾄｼﾘﾝﾀﾞｱｯｾﾝ	1	MAST NO.6- INC.1-16
-	228C0-50071		CYL-ASSY,LIFT VFM425 ﾘﾌﾄｼﾘﾝﾀﾞｱｯｾﾝ	1	MAST NO.1-5 INC.1-16
-	228C0-50072		CYL-ASSY,LIFT VFM425 ﾘﾌﾄｼﾘﾝﾀﾞｱｯｾﾝ	1	MAST NO.6- INC.1-16
-	228C0-50081		CYL-ASSY,LIFT VFM450 ﾘﾌﾄｼﾘﾝﾀﾞｱｯｾﾝ	1	MAST NO.1-5 INC.1-16

FIG.203 LIFT CYLINDER (FRONT)[VFM35H]

(M4040570) リフトシリンダ

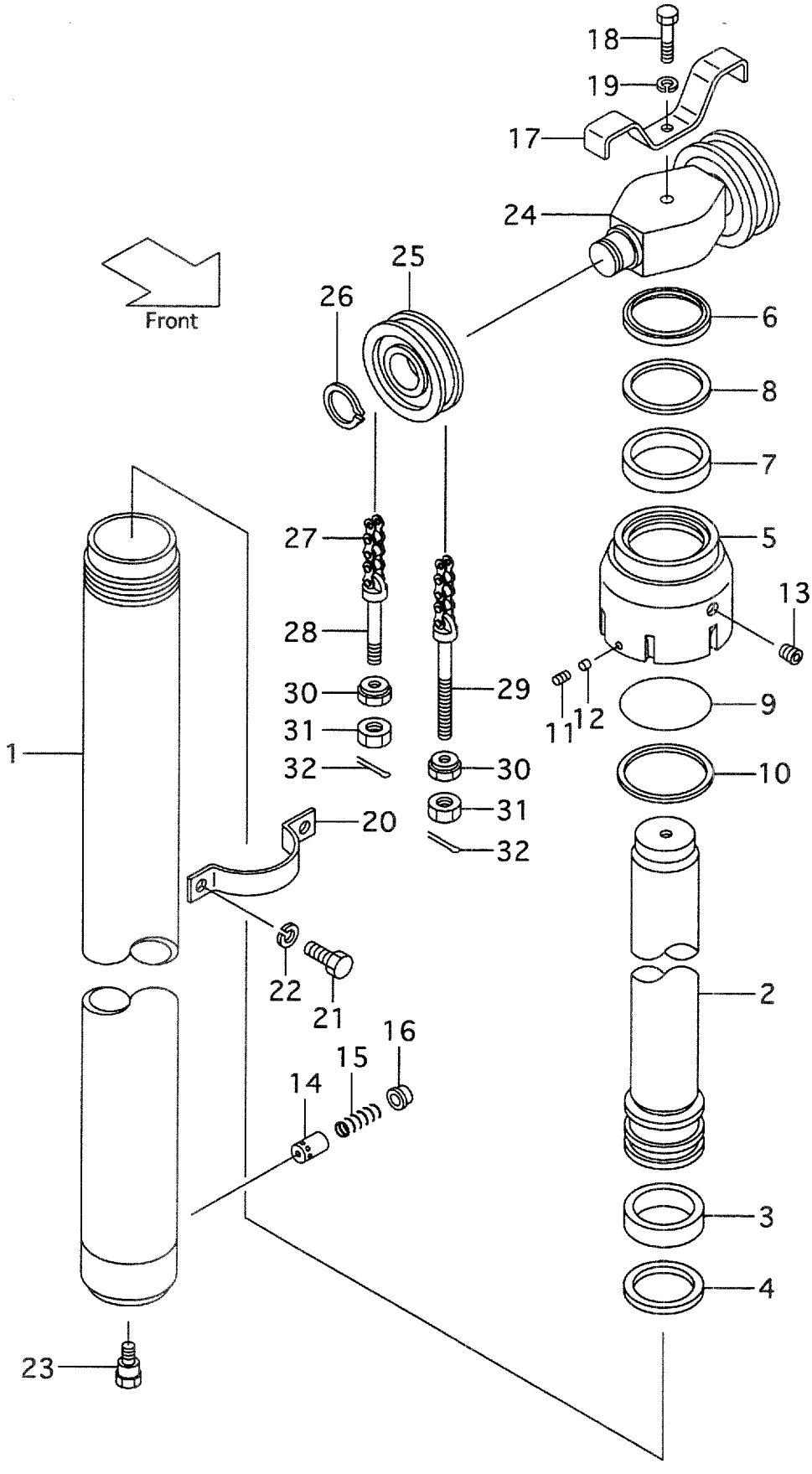

A:VFM35H(FD50, FG50)

Item No	Part No.	Mark	Description	Req'd	Remarks : Serial No.
-	228C0-50082		CYL-ASSY,LIFT VFM450 ﾘﾌﾄｼﾘﾝﾀﾞｱｯｾﾝ	1	MAST NO.6- INC.1-16
-	228C0-50091		CYL-ASSY,LIFT VFM475 ﾘﾌﾄｼﾘﾝﾀﾞｱｯｾﾝ	1	MAST NO.1-5 INC.1-16
-	228C0-50092		CYL-ASSY,LIFT VFM475 ﾘﾌﾄｼﾘﾝﾀﾞｱｯｾﾝ	1	MAST NO.6- INC.1-16
-	228C0-50101		CYL-ASSY,LIFT VFM500 ﾘﾌﾄｼﾘﾝﾀﾞｱｯｾﾝ	1	MAST NO.1-5 INC.1-16
-	228C0-50102		CYL-ASSY,LIFT VFM500 ﾘﾌﾄｼﾘﾝﾀﾞｱｯｾﾝ	1	MAST NO.6- INC.1-16
-	228C0-50111		CYL-ASSY,LIFT VFM550 ﾘﾌﾄｼﾘﾝﾀﾞｱｯｾﾝ	1	MAST NO.1-5 INC.1-16
-	228C0-50112		CYL-ASSY,LIFT VFM550 ﾘﾌﾄｼﾘﾝﾀﾞｱｯｾﾝ	1	MAST NO.6- INC.1-16
-	228C0-50121		CYL-ASSY,LIFT VFM600 ﾘﾌﾄｼﾘﾝﾀﾞｱｯｾﾝ	1	MAST NO.1-5 INC.1-16
-	228C0-50122		CYL-ASSY,LIFT VFM600 ﾘﾌﾄｼﾘﾝﾀﾞｱｯｾﾝ	1	MAST NO.6- INC.1-16
1	228C0-50211		TUBE VFM250 ﾁｭｰﾌﾞ	1	
-	228C0-80221		TUBE VFM270 ﾁｭｰﾌﾞ	1	
-	228C0-50221		TUBE VFM275 ﾁｭｰﾌﾞ	1	
-	228C0-50201		TUBE VFM300 ﾁｭｰﾌﾞ	1	
-	228C0-80231		TUBE VFM325 ﾁｭｰﾌﾞ	1	
-	228C0-50231		TUBE VFM330 ﾁｭｰﾌﾞ	1	
-	228C0-50241		TUBE VFM350 ﾁｭｰﾌﾞ	1	
-	228C0-80251		TUBE VFM366 ﾁｭｰﾌﾞ	1	
-	228C0-50251		TUBE VFM370 ﾁｭｰﾌﾞ	1	
-	228C0-50261		TUBE VFM375 ﾁｭｰﾌﾞ	1	
-	228C0-80271		TUBE VFM400 ﾁｭｰﾌﾞ	1	
-	228C0-50271		TUBE VFM425 ﾁｭｰﾌﾞ	1	
-	228C0-50281		TUBE VFM450 ﾁｭｰﾌﾞ	1	
-	228C0-50291		TUBE VFM475 ﾁｭｰﾌﾞ	1	
-	228C0-50301		TUBE VFM500 ﾁｭｰﾌﾞ	1	
-	228C0-50311		TUBE VFM550 ﾁｭｰﾌﾞ	1	
-	228C0-50321		TUBE VFM600 ﾁｭｰﾌﾞ	1	
2	228C0-50411		ROD,PISTON VFM250 ﾛｯﾄﾞ	1	
-	228C0-80421		ROD,PISTON VFM270 ﾛｯﾄﾞ	1	
-	228C0-50421		ROD,PISTON VFM275 ﾛｯﾄﾞ	1	
-	228C0-50401		ROD,PISTON VFM300 ﾛｯﾄﾞ	1	
-	228C0-80431		ROD,PISTON VFM325 ﾛｯﾄﾞ	1	
-	228C0-50431		ROD,PISTON VFM330 ﾛｯﾄﾞ	1	
-	228C0-50441		ROD,PISTON VFM350 ﾛｯﾄﾞ	1	
-	228C0-80451		ROD,PISTON VFM366 ﾛｯﾄﾞ	1	
-	228C0-50451		ROD,PISTON VFM370 ﾛｯﾄﾞ	1	
-	228C0-50461		ROD,PISTON VFM375 ﾛｯﾄﾞ	1	
-	228C0-80471		ROD,PISTON VFM400 ﾛｯﾄﾞ	1	
-	228C0-50471		ROD,PISTON VFM425 ﾛｯﾄﾞ	1	
-	228C0-50481		ROD,PISTON VFM450 ﾛｯﾄﾞ	1	
-	228C0-50491		ROD,PISTON VFM475 ﾛｯﾄﾞ	1	
-	228C0-50501		ROD,PISTON VFM500 ﾛｯﾄﾞ	1	

FIG.203 LIFT CYLINDER (FRONT)[VFM35H]

(M4040570) リフトシリンダ

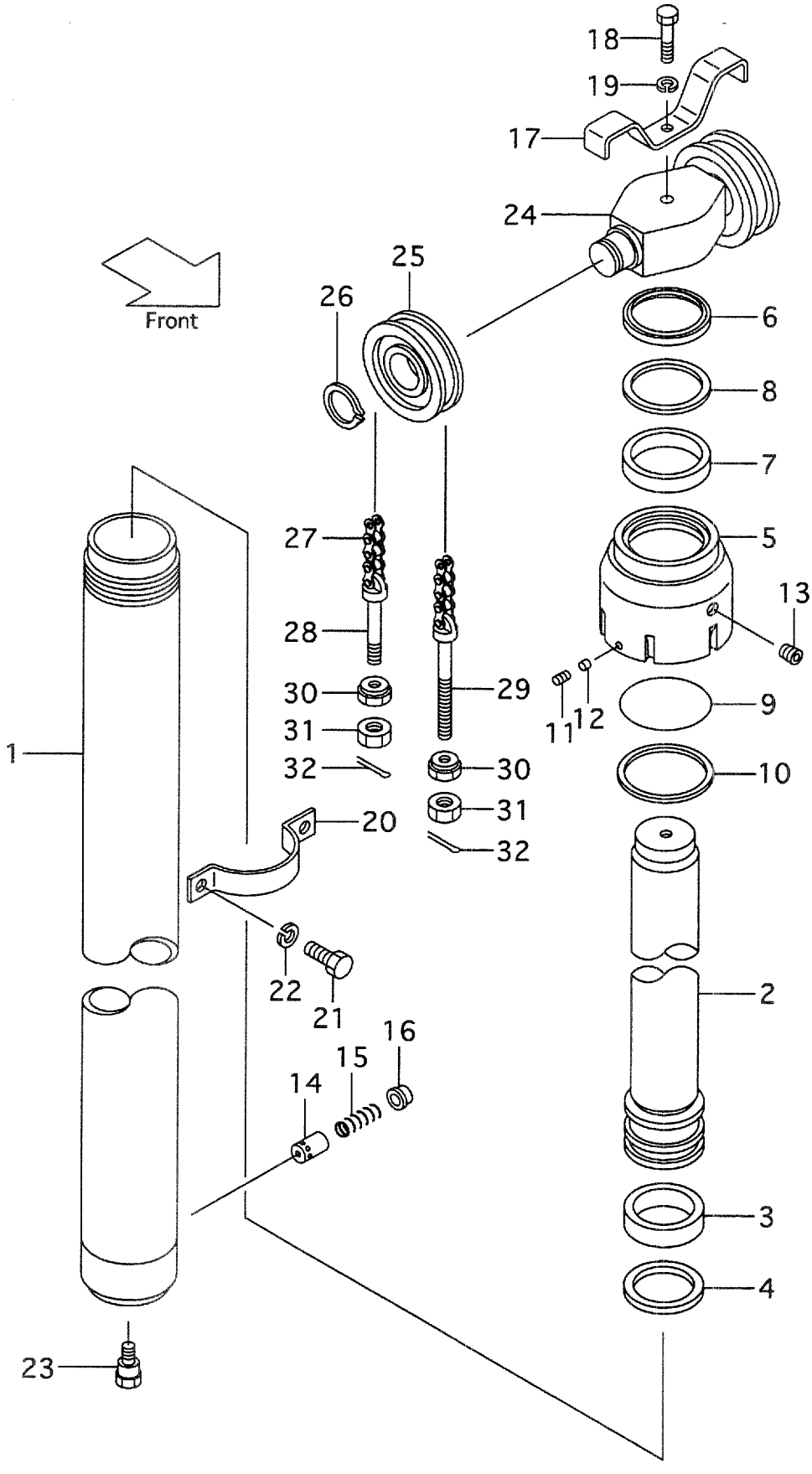

A:VFM35H(FD50,FG50)

Item No	Part No.	Mark	Description		Req'd	Remarks : Serial No.
-	228C0-50511		ROD,PISTON VFM550	ﾛｯﾄﾞ	1	
-	228C0-50521		ROD,PISTON VFM600	ﾛｯﾄﾞ	1	
3	228C0-82431	*	WEARING	ｳｴｱﾘﾝｸﾞ	1	
4	228C0-82441	*	SEAL	ｼｰﾙ	1	
5	228C0-82501		CAP	ｷｬｯﾌﾟ	1	
6	228C0-82531	*	SEAL	ｼｰﾙ	1	
7	228C0-82511	*	PACKING	ﾊﾟｯｷﾝｸﾞ	1	
8	228C0-82521	*	RING	ﾘﾝｸﾞ	1	
9	03350-01400	*	O-RING	Oﾘﾝｸﾞ	1	
10	228C0-82541	*	RING	ﾘﾝｸﾞ	1	
11	25908-44101		PLUG	ﾌﾟﾗｸﾞ	1	
12	25908-44111		PLUG,NYLON	ﾌﾟﾗｸﾞ	1	
13	22518-40151		PLUG	ﾌﾟﾗｸﾞ	1	
14	24389-46011		PISTON	ﾋﾟｽﾄﾝ	1	
15	24389-46021		SPRING	ｽﾌﾟﾘﾝｸﾞ	1	MAST NO.1-5
-	224T0-53451		SPRING	ｽﾌﾟﾘﾝｸﾞ	1	MAST NO.6-
16	24310-82641		RETAINER	ﾘﾃｰﾅ	1	
17	24310-82291		STOPPER	ｽﾄｯﾊﾟ	1	
18	01103-16070		BOLT	ﾎﾞﾙﾄ	1	
19	02011-00016		WASHER	ﾜｯｼｬ	1	
20	228C0-82421		SUPPORT	ｻﾎﾟｰﾄ	1	
21	01103-12025		BOLT	ﾎﾞﾙﾄ	2	
22	02011-00012		WASHER	ﾜｯｼｬ	2	
23	224T0-82561		BOLT	ﾎﾞﾙﾄ	1	
A2	224T0-53361		HEAD-ASSY,PISTON	ﾋﾟｽﾄﾝﾍｯﾄﾞｱｯｾﾝ	1	INC.24-26
24	224T0-53371		HEAD,PISTON	ﾍｯﾄﾞ	1	
25	24609-41241		SHEAVE	ｼｰﾌﾞ	2	
26	02100-00050		RING,SNAP	ｽﾅｯﾌﾟﾘﾝｸﾞ	2	
27	23918-45491		CHAIN,LEAF VFM250	ﾁｪｰﾝ	2	
-	23918-45531		CHAIN,LEAF VFM270	ﾁｪｰﾝ	2	
-	23918-45511		CHAIN,LEAF VFM275	ﾁｪｰﾝ	2	
-	23918-45531		CHAIN,LEAF VFM300	ﾁｪｰﾝ	2	
-	23918-45591		CHAIN,LEAF VFM325	ﾁｪｰﾝ	2	
-	23918-45611		CHAIN,LEAF VFM330	ﾁｪｰﾝ	2	
-	23918-45631		CHAIN,LEAF VFM350	ﾁｪｰﾝ	2	
-	23918-45671		CHAIN,LEAF VFM366	ﾁｪｰﾝ	2	
-	23918-45691		CHAIN,LEAF VFM370	ﾁｪｰﾝ	2	
-	23918-45691		CHAIN,LEAF VFM375	ﾁｪｰﾝ	2	
-	23918-45751		CHAIN,LEAF VFM400	ﾁｪｰﾝ	2	
-	23918-45811		CHAIN,LEAF VFM425	ﾁｪｰﾝ	2	
-	23918-45851		CHAIN,LEAF VFM450	ﾁｪｰﾝ	2	
-	23918-45891		CHAIN,LEAF VFM475	ﾁｪｰﾝ	2	
-	23918-45951		CHAIN,LEAF VFM500	ﾁｪｰﾝ	2	
-	23918-46071		CHAIN,LEAF VFM550	ﾁｪｰﾝ	2	
-	23918-46171		CHAIN,LEAF VFM600	ﾁｪｰﾝ	2	
28	24329-45441		PIN	ﾋﾟﾝ	2	
29	23918-42681		PIN	ﾋﾟﾝ	2	
30	23818-30271		NUT	ﾅｯﾄ	4	
31	01402-00022		NUT	ﾅｯﾄ	4	
32	02200-03040		PIN,COTTER	ﾋﾟﾝ	4	

FIG.203 LIFT CYLINDER (FRONT)[VFM35H]

(M4040570) リフトシリンダ

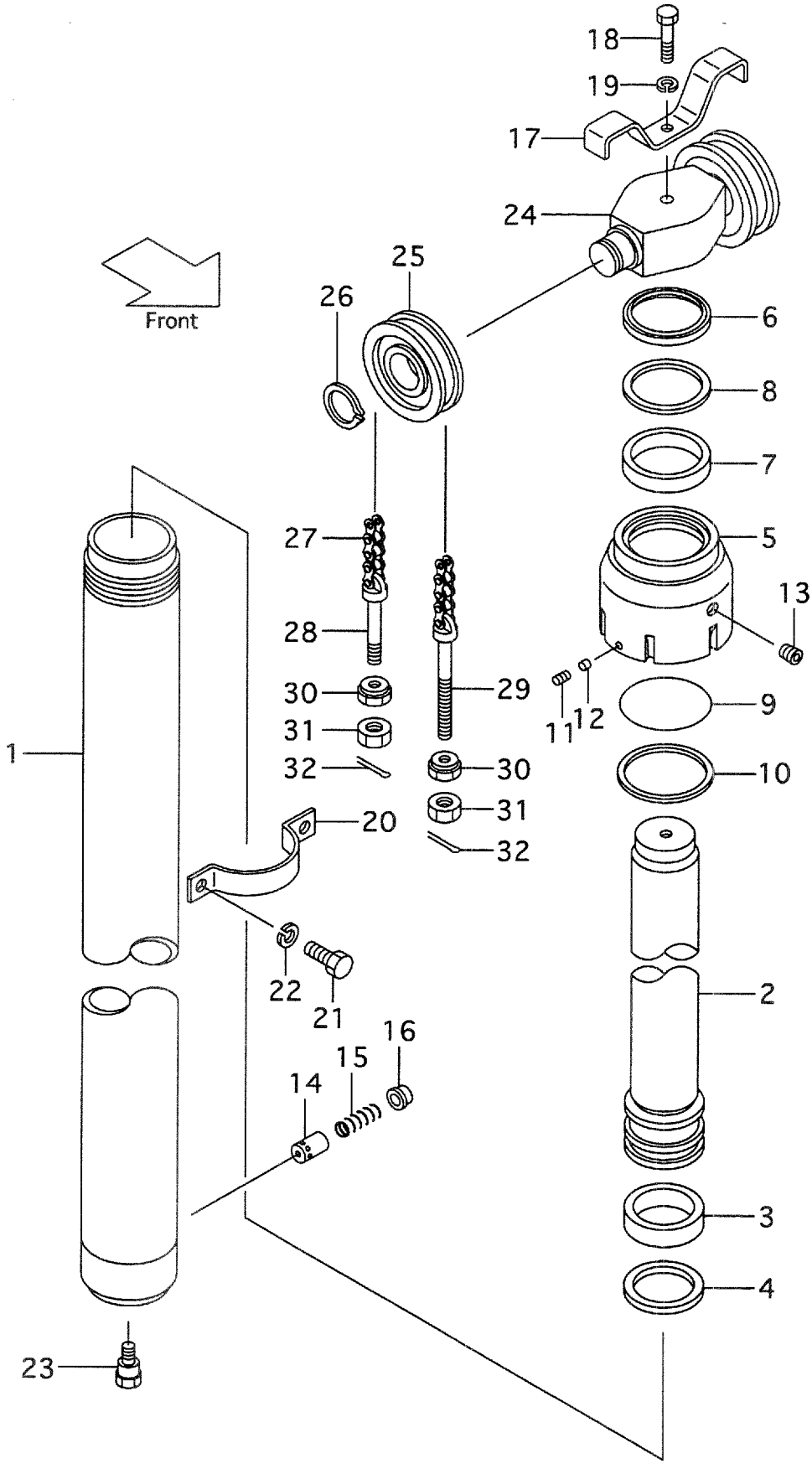

A:VFM35H(FD50,FG50)

Item No	Part No.	Mark	Description	Req'd	Remarks : Serial No.
K1	228C0-59801		KIT,OVERHAUL オーバホールキット	1	INC.3,4,6-10

FIG.204 LIFT CYLINDER (REAR)[VFM35H]

(M4040580) リフトシリンダ

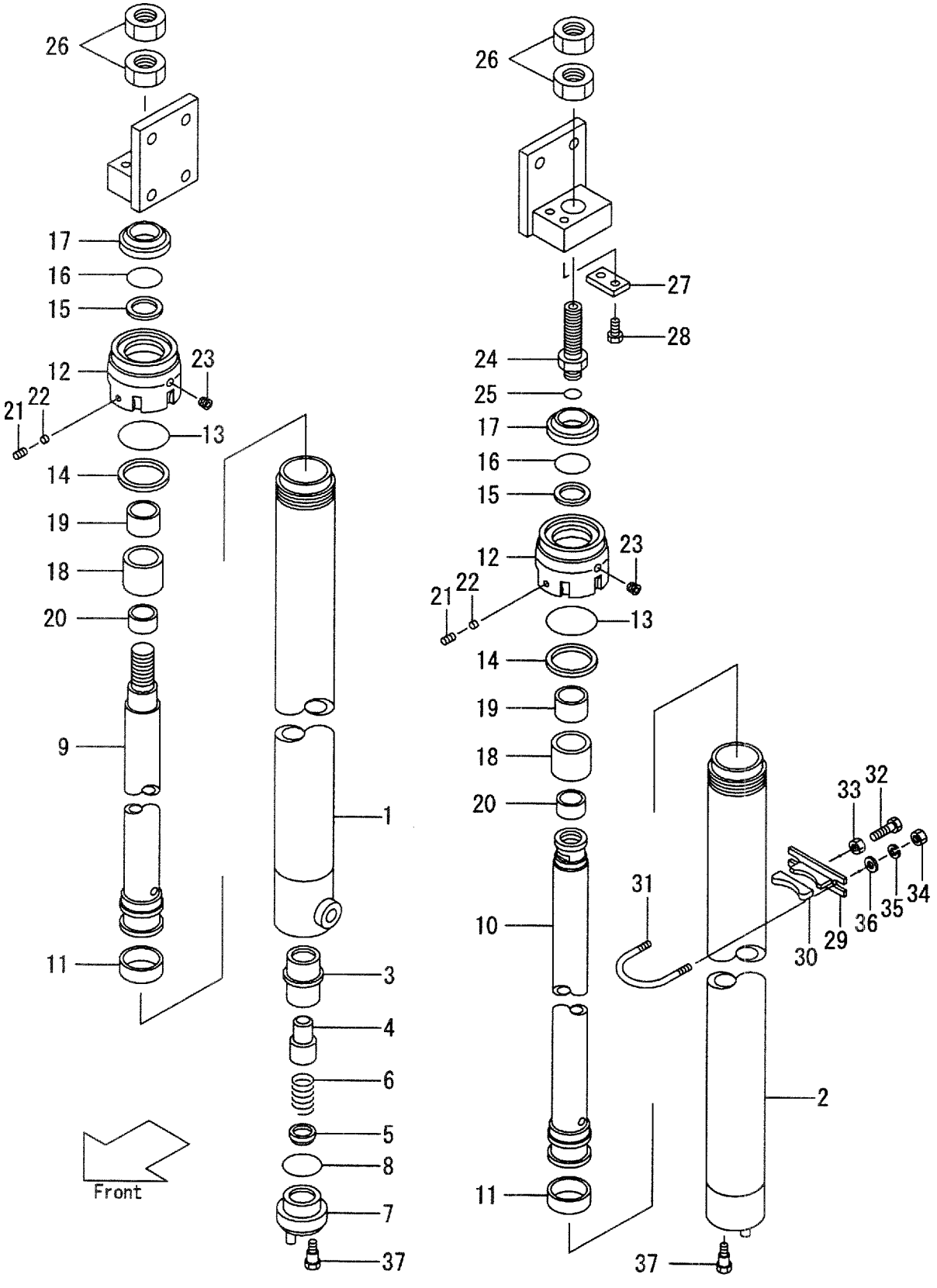

A:VFM35H(FD50,FG50)

Item No	Part No.	Mark	Description	Req'd	Remarks : Serial No.
A1	235H0-50011		CYL-ASSY,LIFT,RH VFM250 ﾘﾌﾄｼﾘﾝﾀﾞｱｯｾﾝ	1	INC.1-23
-	235H0-50021		CYL-ASSY,LIFT,RH VFM270 ﾘﾌﾄｼﾘﾝﾀﾞｱｯｾﾝ	1	INC.1-23
-	235H0-50031		CYL-ASSY,LIFT,RH VFM275 ﾘﾌﾄｼﾘﾝﾀﾞｱｯｾﾝ	1	INC.1-23
-	235H0-50001		CYL-ASSY,LIFT,RH VFM300 ﾘﾌﾄｼﾘﾝﾀﾞｱｯｾﾝ	1	INC.1-23
-	235H0-50041		CYL-ASSY,LIFT,RH VFM325 ﾘﾌﾄｼﾘﾝﾀﾞｱｯｾﾝ	1	INC.1-23
-	235H0-50051		CYL-ASSY,LIFT,RH VFM330 ﾘﾌﾄｼﾘﾝﾀﾞｱｯｾﾝ	1	INC.1-23
-	235H0-50061		CYL-ASSY,LIFT,RH VFM350 ﾘﾌﾄｼﾘﾝﾀﾞｱｯｾﾝ	1	INC.1-23
-	235H0-50071		CYL-ASSY,LIFT,RH VFM366 ﾘﾌﾄｼﾘﾝﾀﾞｱｯｾﾝ	1	INC.1-23
-	235H0-50081		CYL-ASSY,LIFT,RH VFM370 ﾘﾌﾄｼﾘﾝﾀﾞｱｯｾﾝ	1	INC.1-23
-	235H0-50091		CYL-ASSY,LIFT,RH VFM375 ﾘﾌﾄｼﾘﾝﾀﾞｱｯｾﾝ	1	INC.1-23
-	235H0-50101		CYL-ASSY,LIFT,RH VFM400 ﾘﾌﾄｼﾘﾝﾀﾞｱｯｾﾝ	1	INC.1-23
-	235H0-50111		CYL-ASSY,LIFT,RH VFM425 ﾘﾌﾄｼﾘﾝﾀﾞｱｯｾﾝ	1	INC.1-23
-	235H0-50121		CYL-ASSY,LIFT,RH VFM450 ﾘﾌﾄｼﾘﾝﾀﾞｱｯｾﾝ	1	INC.1-23
-	235H0-50131		CYL-ASSY,LIFT,RH VFM475 ﾘﾌﾄｼﾘﾝﾀﾞｱｯｾﾝ	1	INC.1-23
-	235H0-50141		CYL-ASSY,LIFT,RH VFM500 ﾘﾌﾄｼﾘﾝﾀﾞｱｯｾﾝ	1	INC.1-23
-	235H0-50151		CYL-ASSY,LIFT,RH VFM550 ﾘﾌﾄｼﾘﾝﾀﾞｱｯｾﾝ	1	INC.1-23
-	235H0-50161		CYL-ASSY,LIFT,RH VFM600 ﾘﾌﾄｼﾘﾝﾀﾞｱｯｾﾝ	1	INC.1-23
-	235H0-50211		CYL-ASSY,LIFT,LH VFM250 ﾘﾌﾄｼﾘﾝﾀﾞｱｯｾﾝ	1	INC.2-25
-	235H0-50221		CYL-ASSY,LIFT,LH VFM270 ﾘﾌﾄｼﾘﾝﾀﾞｱｯｾﾝ	1	INC.2-25
-	235H0-50231		CYL-ASSY,LIFT,LH VFM275 ﾘﾌﾄｼﾘﾝﾀﾞｱｯｾﾝ	1	INC.2-25
-	235H0-50201		CYL-ASSY,LIFT,LH VFM300 ﾘﾌﾄｼﾘﾝﾀﾞｱｯｾﾝ	1	INC.2-25
-	235H0-50241		CYL-ASSY,LIFT,LH VFM325 ﾘﾌﾄｼﾘﾝﾀﾞｱｯｾﾝ	1	INC.2-25
-	235H0-50251		CYL-ASSY,LIFT,LH VFM330 ﾘﾌﾄｼﾘﾝﾀﾞｱｯｾﾝ	1	INC.2-25
-	235H0-50261		CYL-ASSY,LIFT,LH VFM350 ﾘﾌﾄｼﾘﾝﾀﾞｱｯｾﾝ	1	INC.2-25
-	235H0-50271		CYL-ASSY,LIFT,LH VFM366 ﾘﾌﾄｼﾘﾝﾀﾞｱｯｾﾝ	1	INC.2-25

FIG.204 LIFT CYLINDER (REAR)[VFM35H]

(M4040580) リフトシリンダ

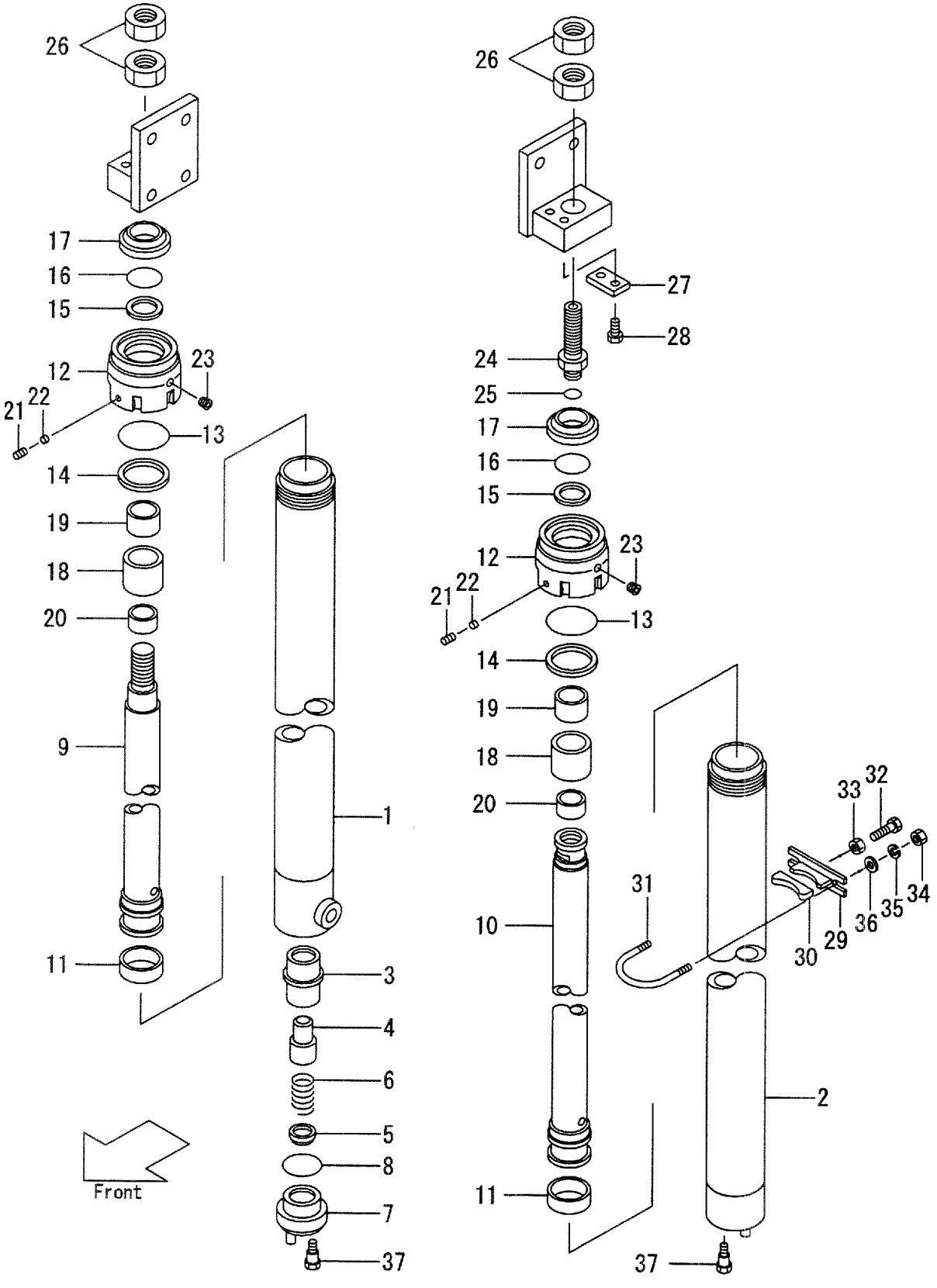

A:VFM35H(FD50,FG50)

Item No	Part No.	Mark	Description	Req'd	Remarks : Serial No.
-	235H0-50281		CYL-ASSY,LIFT,LH VFM370 リフトシリンダアッセン	1	INC.2-25
-	235H0-50291		CYL-ASSY,LIFT,LH VFM375 リフトシリンダアッセン	1	INC.2-25
-	235H0-50301		CYL-ASSY,LIFT,LH VFM400 リフトシリンダアッセン	1	INC.2-25
-	235H0-50311		CYL-ASSY,LIFT,LH VFM425 リフトシリンダアッセン	1	INC.2-25
-	235H0-50321		CYL-ASSY,LIFT,LH VFM450 リフトシリンダアッセン	1	INC.2-25
-	235H0-50331		CYL-ASSY,LIFT,LH VFM475 リフトシリンダアッセン	1	INC.2-25
-	235H0-50341		CYL-ASSY,LIFT,LH VFM500 リフトシリンダアッセン	1	INC.2-25
-	235H0-50351		CYL-ASSY,LIFT,LH VFM550 リフトシリンダアッセン	1	INC.2-25
-	235H0-50361		CYL-ASSY,LIFT,LH VFM600 リフトシリンダアッセン	1	INC.2-25
1	228C0-51011		TUBE,RH VFM250 チューブ	1	
-	228C0-51021		TUBE,RH VFM270 チューブ	1	
-	228C0-51031		TUBE,RH VFM275 チューブ	1	
-	228C0-51001		TUBE,RH VFM300 チューブ	1	
-	228C0-51041		TUBE,RH VFM325 チューブ	1	
-	228C0-51051		TUBE,RH VFM330 チューブ	1	
-	228C0-51061		TUBE,RH VFM350 チューブ	1	
-	228C0-51071		TUBE,RH VFM366 チューブ	1	
-	228C0-51081		TUBE,RH VFM370 チューブ	1	
-	228C0-51091		TUBE,RH VFM375 チューブ	1	
-	228C0-51101		TUBE,RH VFM400 チューブ	1	
-	228C0-51111		TUBE,RH VFM425 チューブ	1	
-	228C0-51121		TUBE,RH VFM450 チューブ	1	
-	228C0-51131		TUBE,RH VFM475 チューブ	1	
-	228C0-51141		TUBE,RH VFM500 チューブ	1	
-	228C0-51151		TUBE,RH VFM550 チューブ	1	
-	228C0-51161		TUBE,RH VFM600 チューブ	1	
2	228C0-51211		TUBE,LH VFM250 チューブ	1	
-	228C0-51221		TUBE,LH VFM270 チューブ	1	
-	228C0-51231		TUBE,LH VFM275 チューブ	1	
-	228C0-51201		TUBE,LH VFM300 チューブ	1	
-	228C0-51241		TUBE,LH VFM325 チューブ	1	
-	228C0-51251		TUBE,LH VFM330 チューブ	1	
-	228C0-51261		TUBE,LH VFM350 チューブ	1	
-	228C0-51271		TUBE,LH VFM366 チューブ	1	
-	228C0-51281		TUBE,LH VFM370 チューブ	1	
-	228C0-51291		TUBE,LH VFM375 チューブ	1	
-	228C0-51301		TUBE,LH VFM400 チューブ	1	
-	228C0-51311		TUBE,LH VFM425 チューブ	1	
-	228C0-51321		TUBE,LH VFM450 チューブ	1	
-	228C0-51331		TUBE,LH VFM475 チューブ	1	
-	228C0-51341		TUBE,LH VFM500 チューブ	1	

FIG.204 LIFT CYLINDER (REAR)[VFM35H]

(M4040580) リフトシリンダ

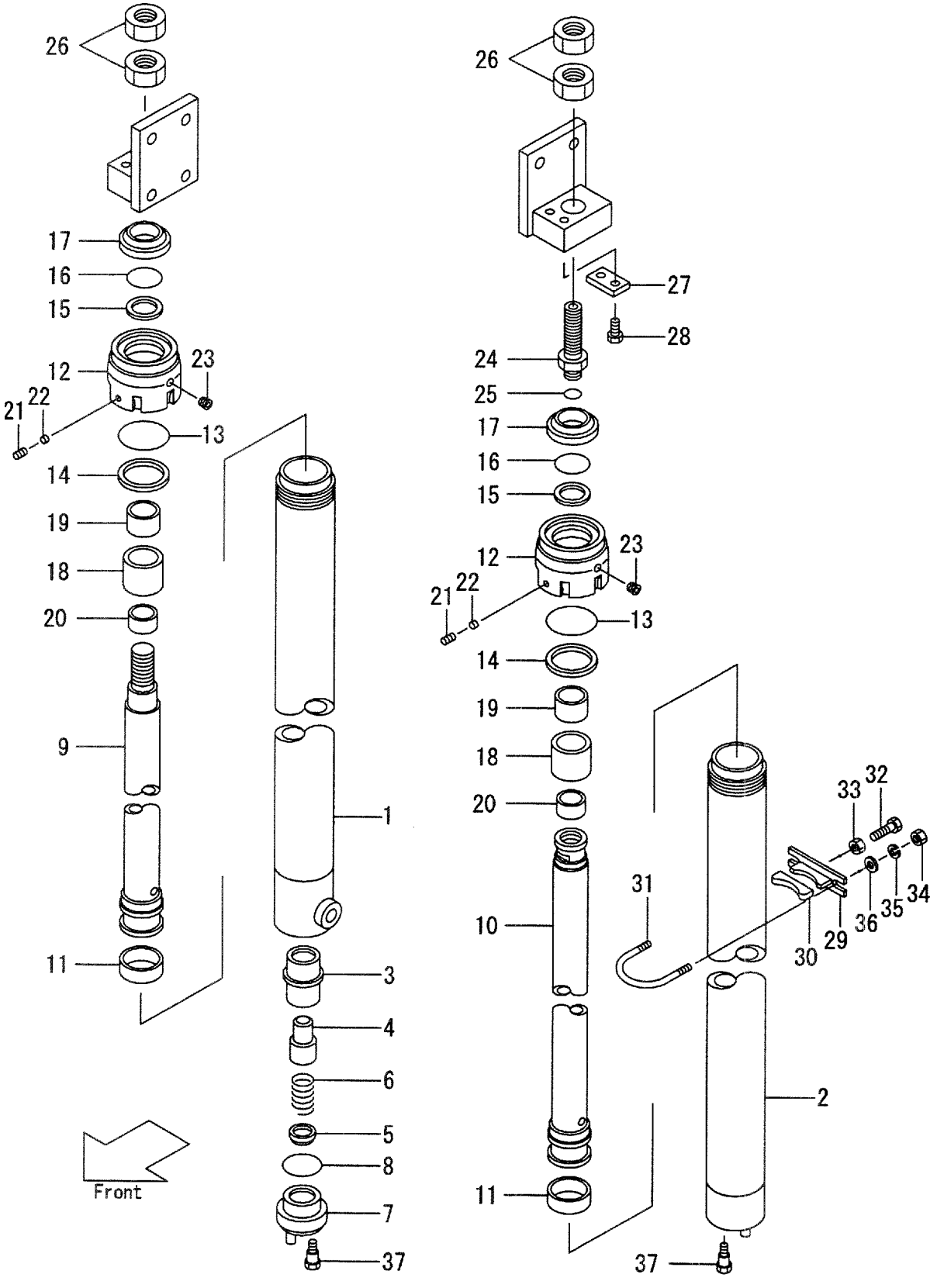

A:VFM35H(FD50,FG50)

Item No	Part No.	Mark	Description		Req'd	Remarks : Serial No.
-	228C0-51351		TUBE,LH VFM550	ﾁｭｰﾌﾞ	1	
-	228C0-51361		TUBE,LH VFM600	ﾁｭｰﾌﾞ	1	
3	53658-43021		SLEEVE	ｽﾘｰﾌﾞ	1	(RH)
4	53658-43011		PISTON	ﾋﾟｽﾄﾝ	1	(RH)
5	53658-43001		CHECK	ﾁｪｯｸ	1	(RH)
6	53658-43031		SPRING	ｽﾌﾟﾘﾝｸﾞ	1	(RH)
7	54238-43051		PLUG	ﾌﾟﾗｸﾞ	1	(RH)
8	03320-00340	*	O-RING	Oﾘﾝｸﾞ	1	(RH)
9	228C0-51431		ROD,PISTON,RH VFM250	ﾛｯﾄﾞ	1	
-	235H0-51001		ROD,PISTON,RH VFM270	ﾛｯﾄﾞ	1	
-	228C0-51401		ROD,PISTON,RH VFM275	ﾛｯﾄﾞ	1	
-	228C0-51441		ROD,PISTON,RH VFM300	ﾛｯﾄﾞ	1	
-	228C0-51461		ROD,PISTON,RH VFM325	ﾛｯﾄﾞ	1	
-	235H0-51011		ROD,PISTON,RH VFM330	ﾛｯﾄﾞ	1	
-	228C0-51491		ROD,PISTON,RH VFM350	ﾛｯﾄﾞ	1	
-	235H0-51021		ROD,PISTON,RH VFM366	ﾛｯﾄﾞ	1	
-	235H0-51031		ROD,PISTON,RH VFM370	ﾛｯﾄﾞ	1	
-	235H0-51041		ROD,PISTON,RH VFM375	ﾛｯﾄﾞ	1	
-	228C0-51511		ROD,PISTON,RH VFM400	ﾛｯﾄﾞ	1	
-	228C0-51521		ROD,PISTON,RH VFM425	ﾛｯﾄﾞ	1	
-	228C0-51531		ROD,PISTON,RH VFM450	ﾛｯﾄﾞ	1	
-	228C0-51541		ROD,PISTON,RH VFM475	ﾛｯﾄﾞ	1	
-	235H0-51051		ROD,PISTON,RH VFM500	ﾛｯﾄﾞ	1	
-	235H0-51061		ROD,PISTON,RH VFM550	ﾛｯﾄﾞ	1	
-	235H0-51071		ROD,PISTON,RH VFM600	ﾛｯﾄﾞ	1	
10	228C0-51631		ROD,PISTON,LH VFM250	ﾛｯﾄﾞ	1	
-	235H0-51101		ROD,PISTON,LH VFM270	ﾛｯﾄﾞ	1	
-	228C0-51601		ROD,PISTON,LH VFM275	ﾛｯﾄﾞ	1	
-	228C0-51641		ROD,PISTON,LH VFM300	ﾛｯﾄﾞ	1	
-	228C0-51661		ROD,PISTON,LH VFM325	ﾛｯﾄﾞ	1	
-	235H0-51111		ROD,PISTON,LH VFM330	ﾛｯﾄﾞ	1	
-	228C0-51691		ROD,PISTON,LH VFM350	ﾛｯﾄﾞ	1	
-	235H0-51121		ROD,PISTON,LH VFM366	ﾛｯﾄﾞ	1	
-	235H0-51131		ROD,PISTON,LH VFM370	ﾛｯﾄﾞ	1	
-	235H0-51141		ROD,PISTON,LH VFM375	ﾛｯﾄﾞ	1	
-	228C0-51711		ROD,PISTON,LH VFM400	ﾛｯﾄﾞ	1	
-	228C0-51721		ROD,PISTON,LH VFM425	ﾛｯﾄﾞ	1	
-	228C0-51731		ROD,PISTON,LH VFM450	ﾛｯﾄﾞ	1	
-	228C0-51741		ROD,PISTON,LH VFM475	ﾛｯﾄﾞ	1	
-	235H0-51151		ROD,PISTON,LH VFM500	ﾛｯﾄﾞ	1	
-	235H0-51161		ROD,PISTON,LH VFM550	ﾛｯﾄﾞ	1	
-	235H0-51171		ROD,PISTON,LH VFM600	ﾛｯﾄﾞ	1	
11	23460-53181		WEARING	ｳｴｱﾘﾝｸﾞ	2	
12	228C0-53011		CAP,CYL	ｷｬｯﾌﾟ	2	
13	03350-00650		O-RING	Oﾘﾝｸﾞ	2	
14	228C0-53021		RING,BACK-UP	ﾘﾝｸﾞ	2	
15	97103-35431		U-PACKING	Uﾊﾟｯｷﾝｸﾞ	2	
16	22658-52301		RING,BACK-UP	ﾘﾝｸﾞ	2	
17	224T8-46001		SEAL,DUST	ｼｰﾙ	2	
A2	228C0-53301		SLEEVE-ASSY	ｽﾘｰﾌﾞｱｯｾﾝ	2	INC.18,19

FIG.204 LIFT CYLINDER (REAR)[VFM35H]

(M4040580) リフトシリンダ

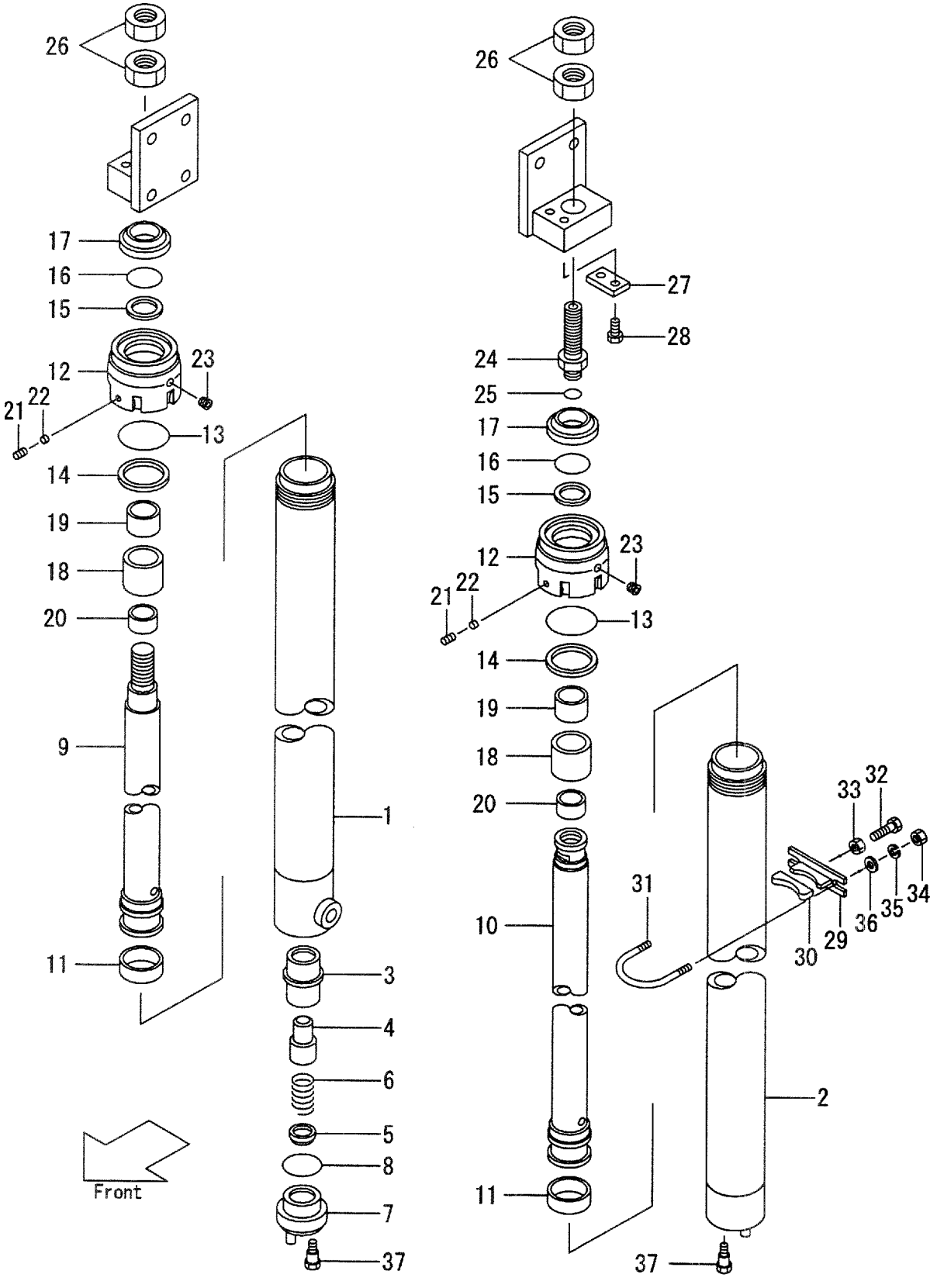

A:VFM35H(FD50, FG50)

Item No	Part No.	Mark	Description		Req'd	Remarks : Serial No.
18	228C0-53311		SLEEVE	ｽﾘｰﾌﾞ	2	
19	23460-53171		BUSHING	ﾌﾞｯｼﾝｸﾞ	2	
20	228C0-53401		SPACER	ｽﾍﾟｰｻ	2	(VFM400-600)
21	25908-44101		PLUG	ﾌﾟﾗｸﾞ	2	
22	25908-44111		PLUG,NYLON	ﾌﾟﾗｸﾞ	2	
23	23870-52871		PLUG	ﾌﾟﾗｸﾞ	4	
24	224T0-53301		NIPPLE	ﾆｯﾌﾟﾙ	1	(LH)
25	03320-00240		O-RING	Oﾘﾝｸﾞ	1	(LH)
26	224T0-53311		NUT	ﾅｯﾄ	4	
27	23648-50161		PLATE,KEY	ﾌﾟﾚｰﾄ	1	(LH)
28	01184-10020		BOLT & WASHER	ﾎﾞﾙﾄ&ﾜｯｼｬ	2	(LH)
29	224T8-42711		SUPPORT	ｻﾎﾟｰﾄ	2	
30	214A8-42631		RUBBER	ﾗﾊﾞｰ	2	
31	224T8-42701		U-BOLT	Uﾎﾞﾙﾄ	2	
32	01120-16040		BOLT	ﾎﾞﾙﾄ	2	
33	01402-00016		NUT	ﾅｯﾄ	2	
34	01400-00010		NUT	ﾅｯﾄ	4	
35	02010-00010		WASHER	ﾜｯｼｬ	4	
36	02000-00010		WASHER	ﾜｯｼｬ	4	
37	235H8-40501		BOLT	ﾎﾞﾙﾄ	2	
K1	224C0-59811		KIT,OVERHAUL	ｵｰﾊﾞﾎｰﾙｷｯﾄ	2	INC.8,11,13-17,25

FIG.205 MAST PIPING [VFM35H]

(M4040590) マストパイピング

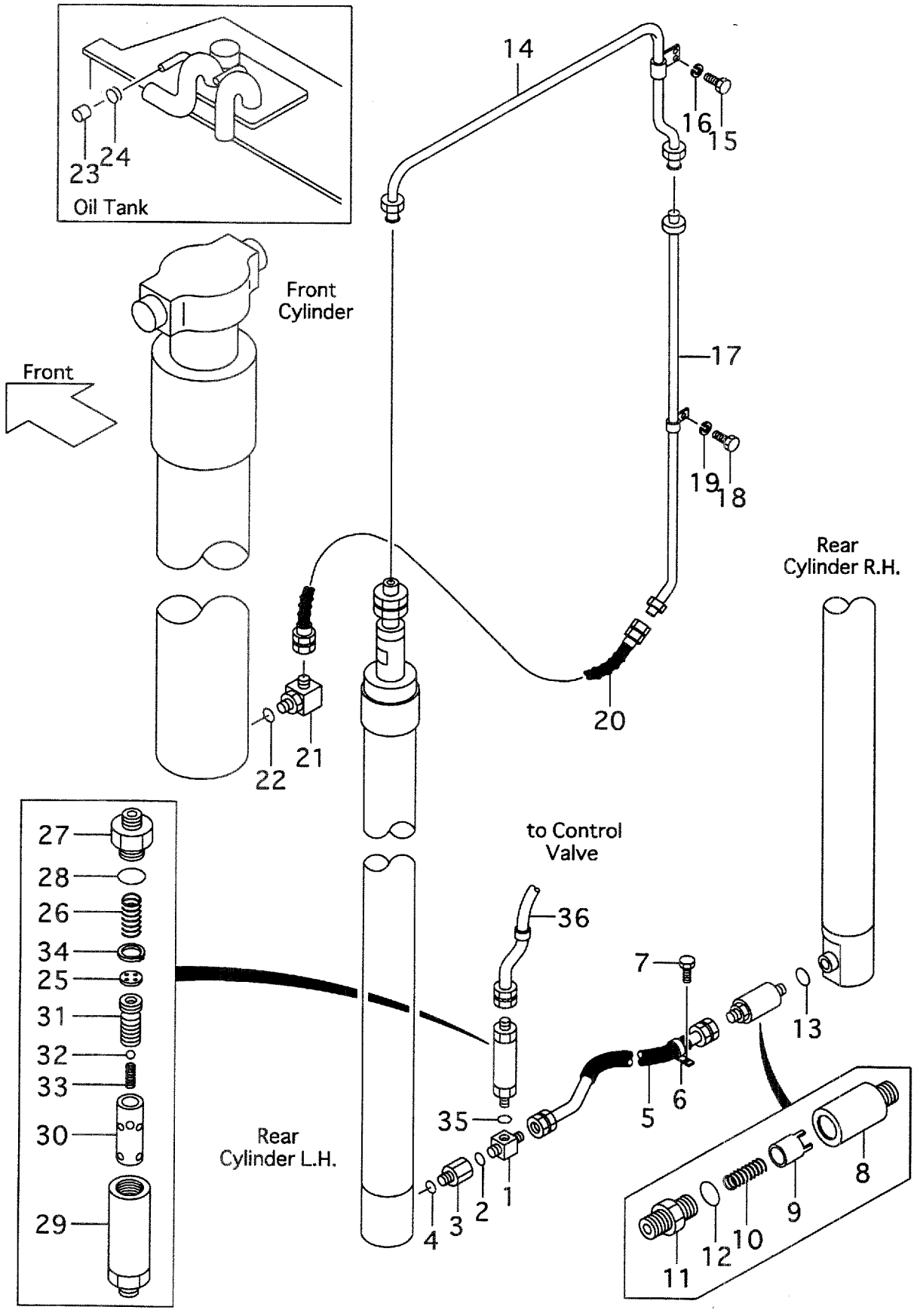

A:VFM35H(FD50,FG50)

Item No	Part No.	Mark	Description		Req'd	Remarks : Serial No.
A1	24609-43682		THREE-WAY-ASSY	ｽﾘｰｳｪｲｱｯｾﾝ	1	INC.1,2
1	NO PART NO.	#	THREE-WAY	ｽﾘｰｳｴｲ	1	
2	03320-00180		O-RING	Oﾘﾝｸﾞ	1	
A2	224T0-91011		NIPPLE-ASSY	ﾆｯﾌﾟﾙｱｯｾﾝ	1	INC.3,4
3	NO PART NO.	#	NIPPLE	ﾆｯﾌﾟﾙ	1	
4	03320-00180		O-RING	Oﾘﾝｸﾞ	1	
5	224T8-42861		HOSE,HP	ﾎｰｽ	1	
6	214A8-43081		CLIP	ｸﾘｯﾌﾟ	1	
7	01184-10020		BOLT	ﾎﾞﾙﾄ	1	
A3	24320-60601		VALVE-ASSY,CUT	ｶｯﾄﾊﾞﾙﾌﾞｱｯｾﾝ	1	INC.8-12
8	NO PART NO.	#	CASE	ｹｰｽ	1	
9	NO PART NO.	#	PISTON	ﾋﾟｽﾄﾝ	1	
10	24230-52701		SPRING	ｽﾌﾟﾘﾝｸﾞ	1	
A4	24320-58581		NIPPLE-ASSY	ﾆｯﾌﾟﾙｱｯｾﾝ	1	INC.11,12
11	NO PART NO.	#	NIPPLE	ﾆｯﾌﾟﾙ	1	
12	03320-00180		O-RING	Oﾘﾝｸﾞ	1	
13	03320-00180		O-RING	Oﾘﾝｸﾞ	1	
14	224T0-62201		PIPE	ﾊﾟｲﾌﾟ	1	
15	01100-08018		BOLT	ﾎﾞﾙﾄ	1	
16	02010-00008		WASHER	ﾜｯｼｬ	1	
17	224T0-60131		PIPE VFM250	ﾊﾟｲﾌﾟ	1	
-	235H0-61101		PIPE VFM270	ﾊﾟｲﾌﾟ	1	
-	224T0-60101		PIPE VFM275	ﾊﾟｲﾌﾟ	1	
-	224T0-60141		PIPE VFM300	ﾊﾟｲﾌﾟ	1	
-	224T0-60161		PIPE VFM325	ﾊﾟｲﾌﾟ	1	
-	235H0-61111		PIPE VFM330	ﾊﾟｲﾌﾟ	1	
-	224T0-60191		PIPE VFM350	ﾊﾟｲﾌﾟ	1	
-	235H0-61121		PIPE VFM366	ﾊﾟｲﾌﾟ	1	
-	235H0-61131		PIPE VFM370	ﾊﾟｲﾌﾟ	1	
-	235H0-61141		PIPE VFM375	ﾊﾟｲﾌﾟ	1	
-	224T0-60211		PIPE VFM400	ﾊﾟｲﾌﾟ	1	
-	224T0-60221		PIPE VFM425	ﾊﾟｲﾌﾟ	1	
-	224T0-60231		PIPE VFM450	ﾊﾟｲﾌﾟ	1	
-	224T0-60241		PIPE VFM475	ﾊﾟｲﾌﾟ	1	
-	235H0-61151		PIPE VFM500	ﾊﾟｲﾌﾟ	1	
-	235H0-61161		PIPE VFM550	ﾊﾟｲﾌﾟ	1	
-	235H0-61171		PIPE VFM600	ﾊﾟｲﾌﾟ	1	
18	01100-08018		BOLT	ﾎﾞﾙﾄ	1	(VFM250-375)
-	01100-08018		BOLT	ﾎﾞﾙﾄ	2	(VFM400-500)
-	01100-08018		BOLT	ﾎﾞﾙﾄ	3	(VFM550-600)
19	02010-00008		WASHER	ﾜｯｼｬ	1	(VFM250-375)
-	02010-00008		WASHER	ﾜｯｼｬ	2	(VFM400-500)
-	02010-00008		WASHER	ﾜｯｼｬ	3	(VFM550-600)
20	228C0-62501		HOSE,HP	ﾎｰｽ	1	
A5	24320-58521		ELBOW-ASSY	ｴﾙﾎﾞｱｯｾﾝ	1	INC.21,22
21	NO PART NO.	#	ELBOW	ｴﾙﾎﾞ	1	
22	03320-00240		O-RING	Oﾘﾝｸﾞ	1	
23	24356-13011		CAP	ｷｬｯﾌﾟ	1	
24	04911-00032		CLIP	ｸﾘｯﾌﾟ	1	
A6	228C8-41002		REGULATOR-ASSY,FLOW	ﾚｷﾞｭﾚｰﾀｱｯｾﾝ	1	INC.25-34

FIG.205 MAST PIPING [VFM35H]

(M4040590) マストパイピング

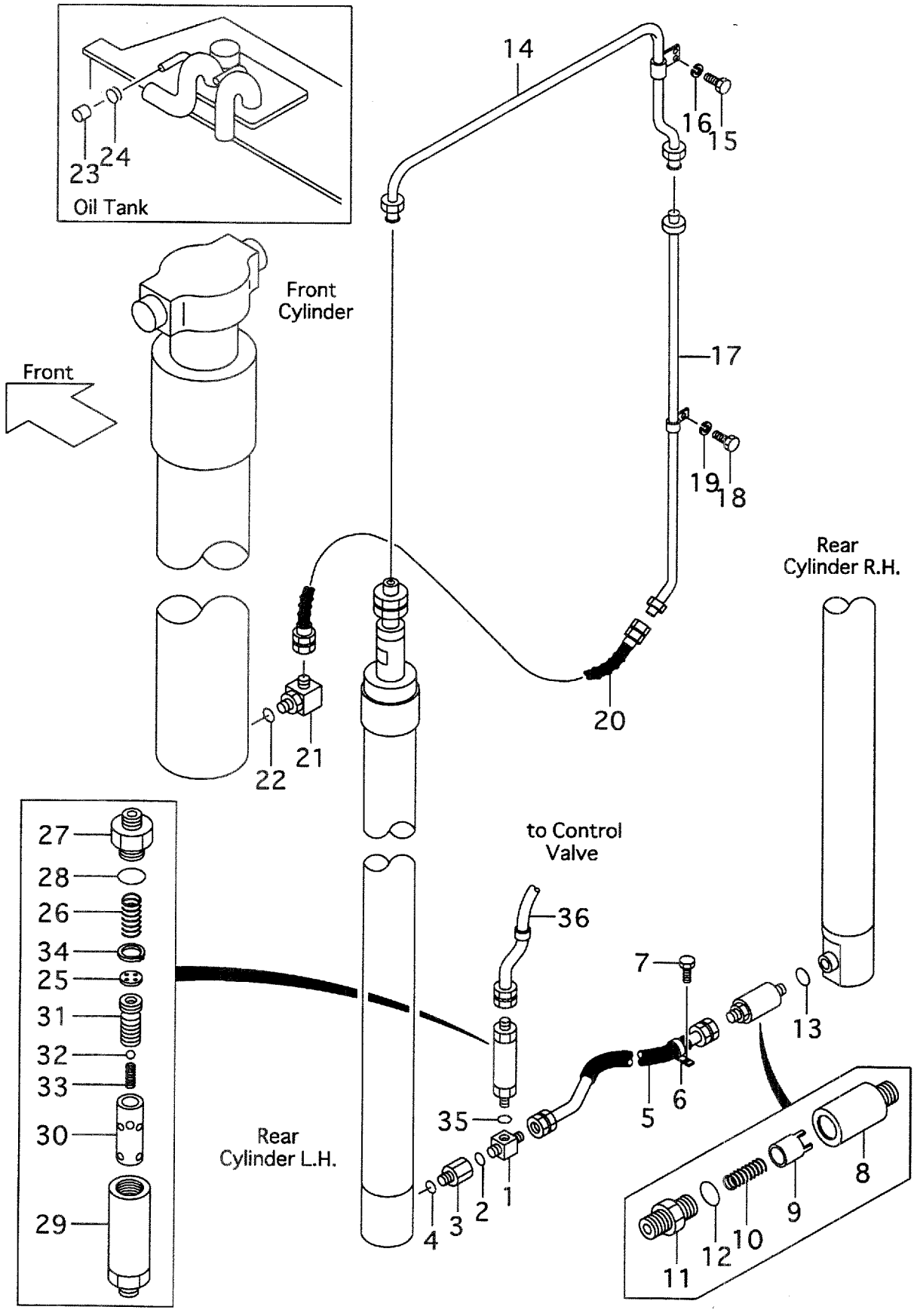

A:VFM35H(FD50, FG50)

Item No	Part No.	Mark	Description		Req'd	Remarks : Serial No.
25	NO PART NO.	#	PLATE	ﾌﾟﾚｰﾄ	1	
26	24609-43631		SPRING	ｽﾌﾟﾘﾝｸﾞ	2	
27	NO PART NO.	#	NIPPLE	ﾆｯﾌﾟﾙ	1	
28	03320-00360		O-RING	Oﾘﾝｸﾞ	1	
29	NO PART NO.	#	CASE	ｹｰｽ	1	
30	NO PART NO.	#	SLEEVE	ｽﾘｰﾌﾞ	1	
31	NO PART NO.	#	PISTON	ﾋﾟｽﾄﾝ	1	
32	24459-42951		BALL	ﾎﾞｰﾙ	1	
33	214A8-44151		SPRING	ｽﾌﾟﾘﾝｸﾞ	1	
34	02110-00020		RING,SNAP	ｽﾅｯﾌﾟﾘﾝｸﾞ	1	
35	03320-00240		O-RING	Oﾘﾝｸﾞ	1	
36	224T8-02101		HOSE,HP	ﾎｰｽ	1	

FIG.206 FORK & LIFT BRACKET [VFHM24T]

(M4040910) フォーク&リフトブラケット

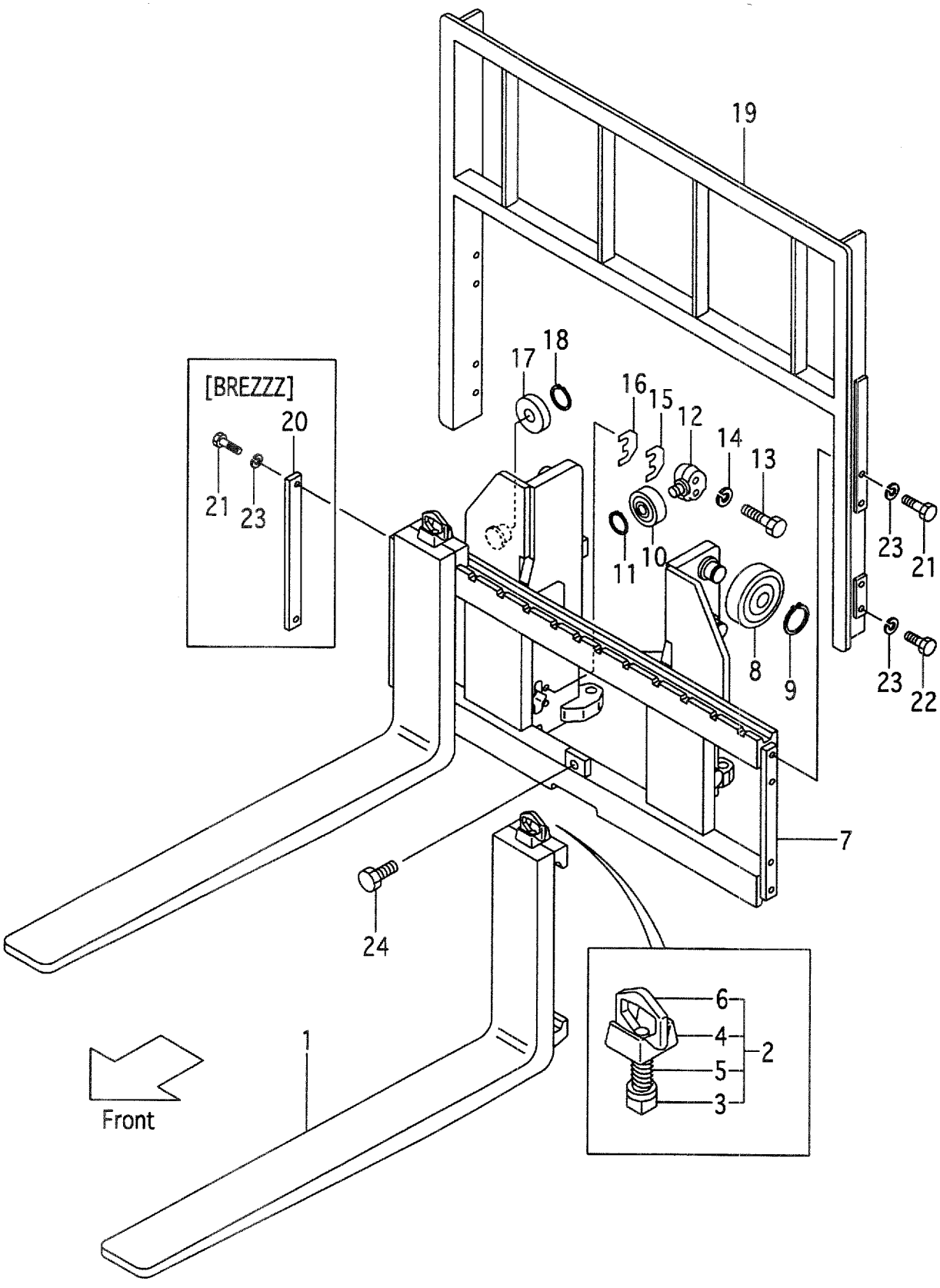

A:VFHM24T(FD35,FG35)
B:VFHM24T(FD40,FG40)

FIG.206
(M4040910)

Item No	Part No.	Mark	Description	Req'd	Remarks : Serial No.
1	24328-10513		FORK フォーク	2	MAST NO.1-382 (L=1070) INC.3-6
-	24328-10514		FORK フォーク	2	MAST NO.383- (L=1070) INC.3-6
-	24328-10503		FORK フォーク	2	[LF100] INC.3-6
-	24328-10514		FORK フォーク	2	[LF107] INC.3-6
-	24328-10523		FORK フォーク	2	[LF110] INC.3-6
-	24328-10533		FORK フォーク	2	[LF120] INC.3-6
-	24328-10543		FORK フォーク	2	MAST NO.1-382 [LF122] INC.3-6
-	24328-10544		FORK フォーク	2	MAST NO.383- [LF122] INC.3-6
-	24328-12303		FORK フォーク	2	MAST NO.1-506 [LF130] INC.3-6
-	24328-12304		FORK フォーク	2	MAST NO.507- [LF130] INC.3-6
-	24328-10553		FORK フォーク	2	MAST NO.1-506 [LF137] INC.3-6
-	24328-10554		FORK フォーク	2	MAST NO.507- [LF137] INC.3-6
-	24328-12313		FORK フォーク	2	MAST NO.1-506 [LF140] INC.3-6
-	24328-12314		FORK フォーク	2	MAST NO.507- [LF140] INC.3-6
-	24328-12323		FORK フォーク	2	MAST NO.1-506 [LF150] INC.3-6
-	24328-12324		FORK フォーク	2	MAST NO.507- [LF150] INC.3-6
-	24328-10563		FORK フォーク	2	MAST NO.1-506 [LF152] INC.3-6
-	24328-10564		FORK フォーク	2	MAST NO.507- [LF152] INC.3-6
-	24328-12333		FORK フォーク	2	MAST NO.1-506 [LF160] INC.3-6
-	24328-12334		FORK フォーク	2	MAST NO.507- [LF160] INC.3-6
-	24328-10573		FORK フォーク	2	MAST NO.1-506 [LF167] INC.3-6
-	24328-10574		FORK フォーク	2	MAST NO.507- [LF167] INC.3-6
-	24328-12343		FORK フォーク	2	MAST NO.1-506 [LF170] INC.3-6
-	24328-12344		FORK フォーク	2	MAST NO.507- [LF170] INC.3-6
-	24328-12353		FORK フォーク	2	MAST NO.1-506 [LF180] INC.3-6
-	24328-12354		FORK フォーク	2	MAST NO.507- [LF180] INC.3-6
-	24328-10583		FORK フォーク	2	MAST NO.1-506 [LF182] INC.3-6

FIG.206 FORK & LIFT BRACKET [VFHM24T]

(M4040910) フォーク&リフトブラケット

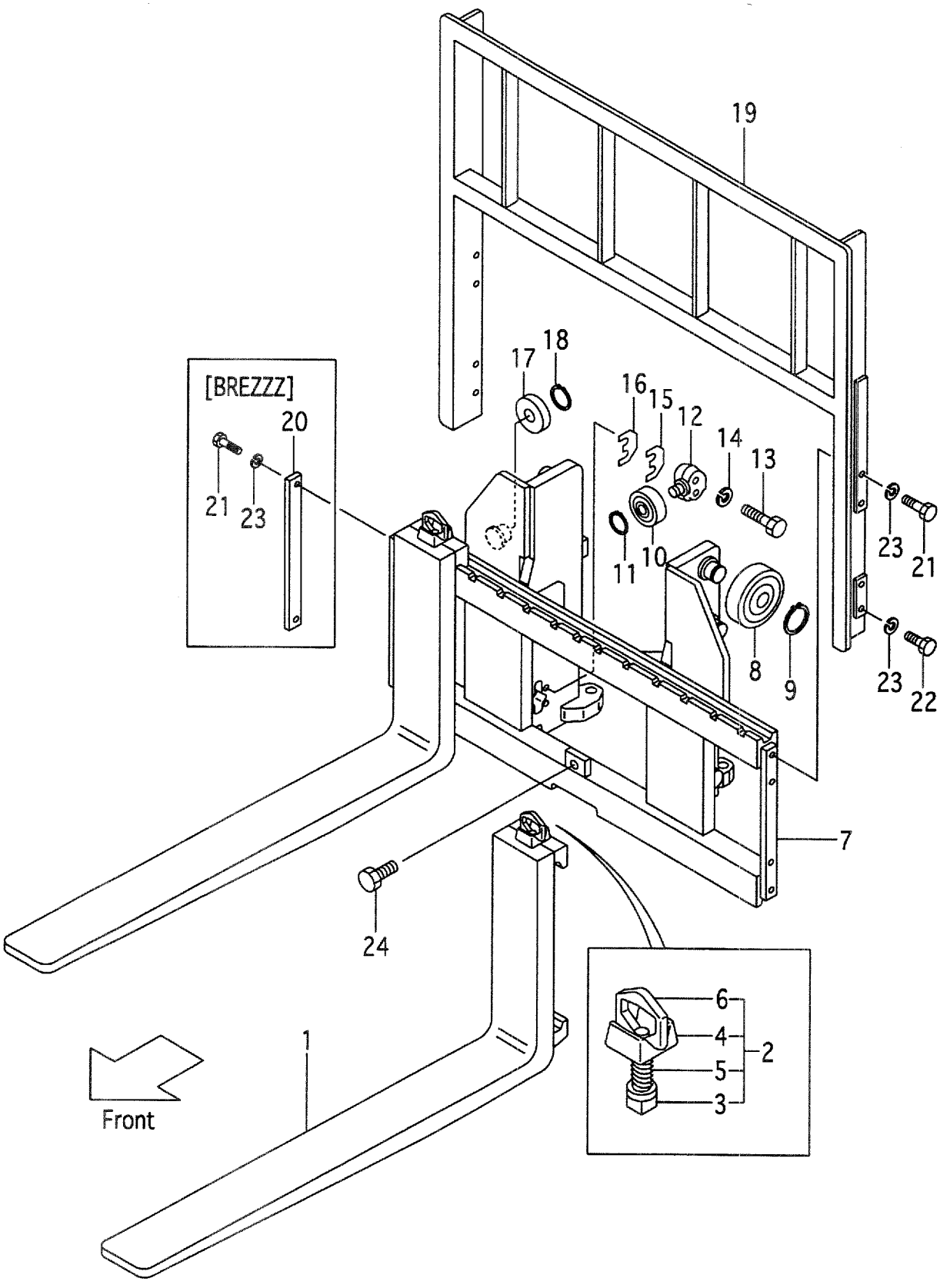

A:VFHM24T(FD35,FG35)
B:VFHM24T(FD40,FG40)

FIG.206
(M4040910)

Item No	Part No.	Mark	Description		Req'd	Remarks : Serial No.
-	24328-10584		FORK	ﾌｫｰｸ	2	MAST NO.507- [LF182] INC.3-6
-	24328-12363		FORK	ﾌｫｰｸ	2	MAST NO.1-506 [LF190] INC.3-6
-	24328-12364		FORK	ﾌｫｰｸ	2	MAST NO.507- [LF190] INC.3-6
-	24328-10593		FORK	ﾌｫｰｸ	2	MAST NO.1-506 [LF197] INC.3-6
-	24328-10594		FORK	ﾌｫｰｸ	2	MAST NO.507- [LF197] INC.3-6
-	24328-12373		FORK	ﾌｫｰｸ	2	MAST NO.1-506 [LF200] INC.3-6
-	24328-12374		FORK	ﾌｫｰｸ	2	MAST NO.507- [LF200] INC.3-6
-	24328-12383		FORK	ﾌｫｰｸ	2	MAST NO.1-506 [LF210] INC.3-6
-	24328-12384		FORK	ﾌｫｰｸ	2	MAST NO.507- [LF210] INC.3-6
-	24328-10603		FORK	ﾌｫｰｸ	2	MAST NO.1-506 [LF212] INC.3-6
-	24328-10604		FORK	ﾌｫｰｸ	2	MAST NO.507- [LF212] INC.3-6
-	24328-10613		FORK	ﾌｫｰｸ	2	MAST NO.1-538 [LF220] INC.3-6
-	24328-10614		FORK	ﾌｫｰｸ	2	MAST NO.539- [LF220] INC.3-6
-	24328-10623		FORK	ﾌｫｰｸ	2	MAST NO.1-538 [LF227] INC.3-6
-	24328-10624		FORK	ﾌｫｰｸ	2	MAST NO.539- [LF227] INC.3-6
-	24328-12393		FORK	ﾌｫｰｸ	2	MAST NO.1-538 [LF230] INC.3-6
-	24328-12394		FORK	ﾌｫｰｸ	2	MAST NO.539- [LF230] INC.3-6
2	214J8-11001		STOPPER,FORK	ｽﾄｯﾊﾟｱｯｾﾝ	2	MAST NO.1-793 INC.3-6
-	214J8-11002		STOPPER,FORK	ｽﾄｯﾊﾟ	2	MAST NO.794-
3	NO PART NO.	#	STOPPER	ｽﾄｯﾊﾟ	2	MAST NO.1-793
4	214J8-12001		HEAD	ﾍｯﾄﾞ	2	MAST NO.1-793
5	214J8-12031		SPRING	ｽﾌﾟﾘﾝｸﾞ	2	MAST NO.1-793
6	214A8-12021		HANDLE	ﾊﾝﾄﾞﾙ	2	MAST NO.1-793
7	224T0-90001		BRACKET,LIFT	ﾌﾞﾗｹｯﾄ	2	
-	224T0-91101		BRACKET,LIFT	ﾌﾞﾗｹｯﾄ	2	[LBR002]
-	524T1-62101		BRACKET,LIFT	ﾌﾞﾗｹｯﾄ	2	[WFY168][WFY183][WFY200]
-	524T1-62111		BRACKET,LIFT	ﾌﾞﾗｹｯﾄ	2	[WFY135][WFY138][WFY145] [WFY146][WFY154][WFY180]
-	524T1-62151		BRACKET,LIFT	ﾌﾞﾗｹｯﾄ	1	[LBR002/WFY168]
8	24609-42111		ROLLER,END	ﾛｰﾗ	6	
-	24609-42121		ROLLER,END	ﾛｰﾗ	(4)	(UPPER & LOWER)
9	02100-00045		RING,SNAP	ｽﾅｯﾌﾟﾘﾝｸﾞ	6	

FIG.206 FORK & LIFT BRACKET [VFHM24T]

(M4040910) フォーク&リフトブラケット

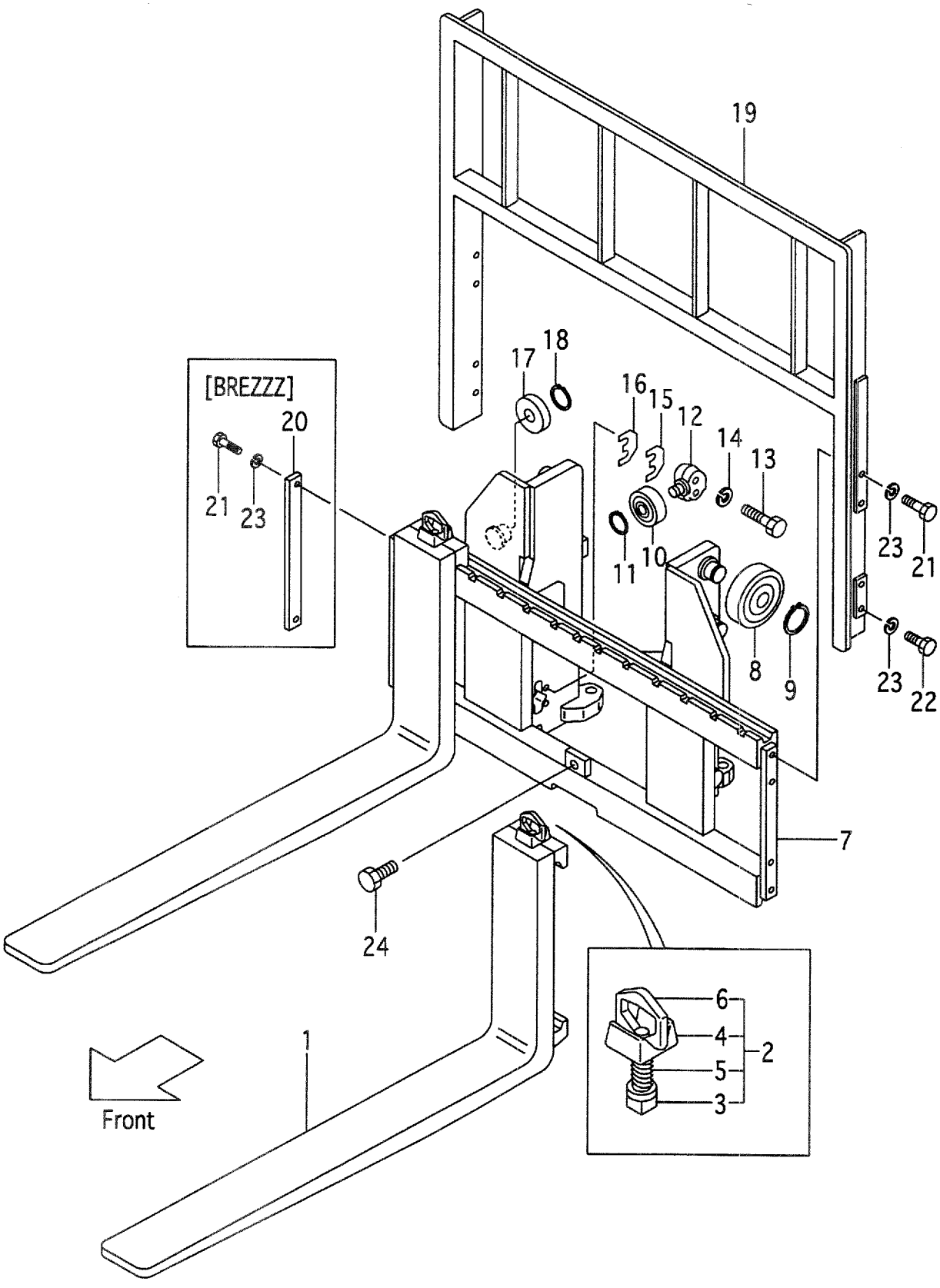

A:VFHM24T(FD35,FG35)
B:VFHM24T(FD40,FG40)

Item No	Part No.	Mark	Description		Req'd	Remarks : Serial No.
10	22198-22341		ROLLER,END,91.5	ﾛｰﾗ	2	
11	02100-00030		RING,SNAP	ｽﾅｯﾌﾟﾘﾝｸﾞ	2	
12	24609-42131		SHAFT	ｼｬﾌﾄ	2	
13	01103-16065		BOLT	ﾎﾞﾙﾄ	4	
14	02011-00016		WASHER	ﾜｯｼｬ	4	
15	24609-42151		SHIM,T-1.0	ｼﾑ	8	
16	24609-42161		SHIM,T-0.2	ｼﾑ	4	
17	22198-22341		ROLLER,END,91.5	ﾛｰﾗ	2	
-	22198-22341		ROLLER,END,91.5	ﾛｰﾗ	2	[WFY168][WFY183][WFY200]
-	22198-22341		ROLLER,END,91.5	ﾛｰﾗ	4	[LBR002][LBR002/WFY168]
-	22198-22341		ROLLER,END,91.5	ﾛｰﾗ	4	[WFY135][WFY138][WFY145]
						[WFY146][WFY154][WFY180]
-	24258-33401		ROLLER,END,92.0	ﾛｰﾗ	(2)	
-	24258-33401		ROLLER,END,92.0	ﾛｰﾗ	(2)	[WFY168][WFY183][WFY200]
-	24258-33401		ROLLER,END,92.0	ﾛｰﾗ	(4)	[LBR002][LBR002/WFY168]
-	24258-33401		ROLLER,END,92.0	ﾛｰﾗ	(4)	[WFY135][WFY138][WFY145]
						[WFY146][WFY154][WFY180]
18	02100-00030		RING,SNAP	ｽﾅｯﾌﾟﾘﾝｸﾞ	2	
-	02100-00030		RING,SNAP	ｽﾅｯﾌﾟﾘﾝｸﾞ	2	[WFY168][WFY183][WFY200]
-	02100-00030		RING,SNAP	ｽﾅｯﾌﾟﾘﾝｸﾞ	4	[LBR002][LBR002/WFY168]
-	02100-00030		RING,SNAP	ｽﾅｯﾌﾟﾘﾝｸﾞ	4	[WFY135][WFY138][WFY145]
						[WFY146][WFY154][WFY180]
19	224T8-22301		BACKREST	ﾊﾞｯｸﾚｽﾄ	1	
-	524T2-74001		BACKREST	ﾊﾞｯｸﾚｽﾄ	1	[EXA][EXC]
-	524T1-64301		BACKREST	ﾊﾞｯｸﾚｽﾄ	1	[WFY168]
-	524T1-64311		BACKREST	ﾊﾞｯｸﾚｽﾄ	1	[WFY180]
-	224T8-22601		BACKREST	ﾊﾞｯｸﾚｽﾄ	1	[HBR130]
-	224T8-22611		BACKREST	ﾊﾞｯｸﾚｽﾄ	1	[HBR140]
-	224T8-22621		BACKREST	ﾊﾞｯｸﾚｽﾄ	1	[HBR150]
-	224T8-22631		BACKREST	ﾊﾞｯｸﾚｽﾄ	1	[HBR160]
20	24450-92021		PLATE	ﾌﾟﾚｰﾄ	2	[BREZZZ]
21	01100-14030		BOLT	ﾎﾞﾙﾄ	4	
22	01100-14025		BOLT	ﾎﾞﾙﾄ	4	
23	02010-00014		WASHER	ﾜｯｼｬ	8	
-	02010-00014		WASHER	ﾜｯｼｬ	4	[BREZZZ]
24	01184-12025		BOLT	ﾎﾞﾙﾄ	1	

FIG.207 MAST [VFHM24T]

(M4040710) マスト

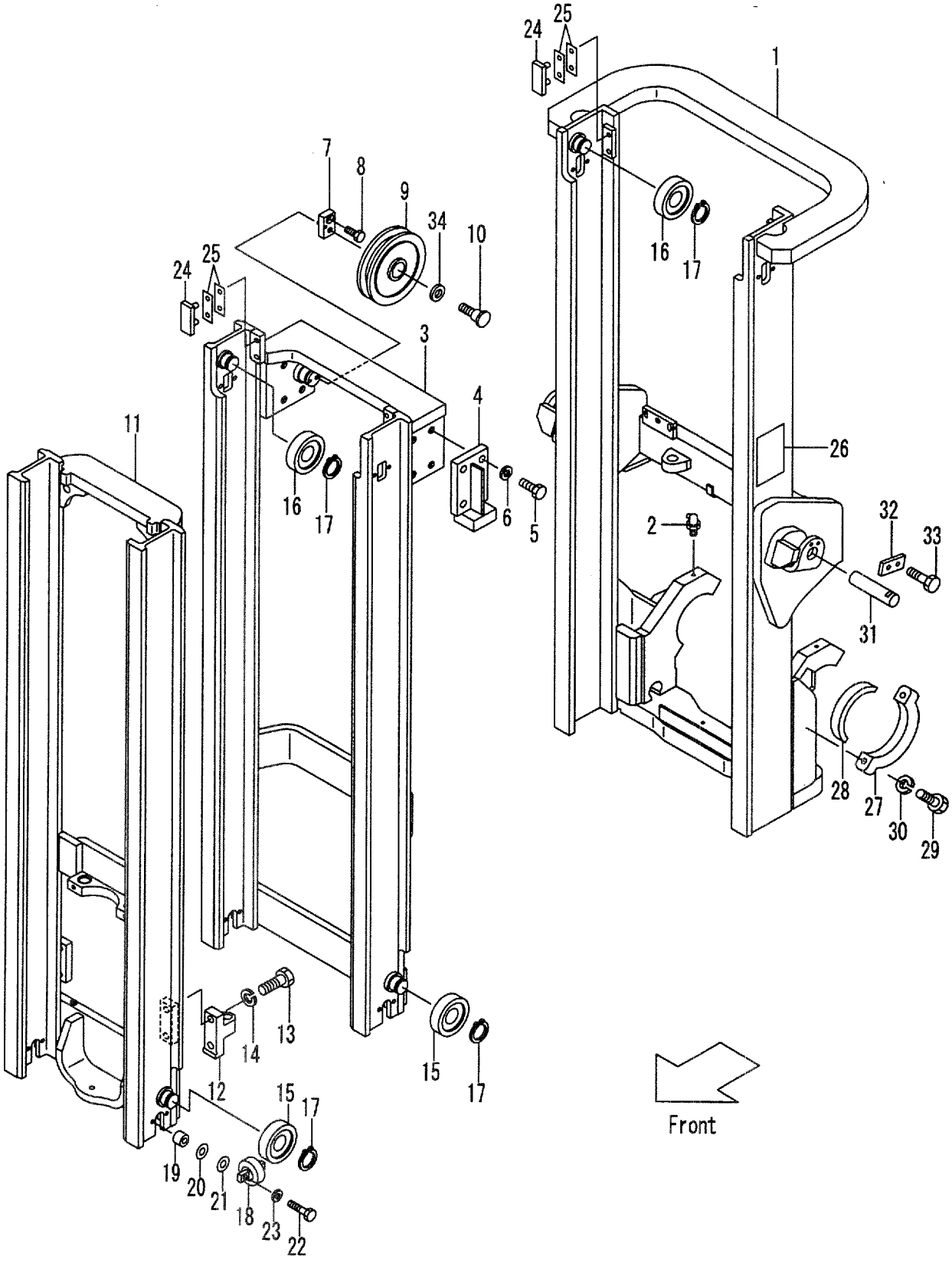

A:VFHM24T(FD35,FG35)
B:VFHM24T(FD40,FG40)

Item No	Part No.	Mark	Description	Req'd	Remarks : Serial No.
1	224T0-70011		MAST,OUTER VFHM360 ｱｳﾀﾏｽﾄ	1	
-	224T0-70021		MAST,OUTER VFHM400 ｱｳﾀﾏｽﾄ	1	
-	224T0-70001		MAST,OUTER VFHM435 ｱｳﾀﾏｽﾄ	1	
-	224T0-70031		MAST,OUTER VFHM480 ｱｳﾀﾏｽﾄ	1	
-	224T0-70041		MAST,OUTER VFHM500 ｱｳﾀﾏｽﾄ	1	
-	224T0-70051		MAST,OUTER VFHM540 ｱｳﾀﾏｽﾄ	1	
-	224T0-70061		MAST,OUTER VFHM550 ｱｳﾀﾏｽﾄ	1	
-	224T0-70071		MAST,OUTER VFHM600 ｱｳﾀﾏｽﾄ	1	
-	224T0-70081		MAST,OUTER VFHM650 ｱｳﾀﾏｽﾄ	1	
-	224T0-70091		MAST,OUTER VFHM700 ｱｳﾀﾏｽﾄ	1	
-	224T0-70101		MAST,OUTER VFHM750 ｱｳﾀﾏｽﾄ	1	
-	224T0-70111		MAST,OUTER VFHM800 ｱｳﾀﾏｽﾄ	1	
-	524T3-86211		MAST,OUTER VFHM360 ｱｳﾀﾏｽﾄ	1	[RW][HC][EXR]
-	524T3-86221		MAST,OUTER VFHM400 ｱｳﾀﾏｽﾄ	1	[RW][HC][EXR]
-	524T3-86201		MAST,OUTER VFHM435 ｱｳﾀﾏｽﾄ	1	[RW][HC][EXR]
-	524T3-86231		MAST,OUTER VFHM480 ｱｳﾀﾏｽﾄ	1	[RW][HC][EXR]
-	524T3-86241		MAST,OUTER VFHM500 ｱｳﾀﾏｽﾄ	1	[RW][HC][EXR]
-	524T3-86251		MAST,OUTER VFHM540 ｱｳﾀﾏｽﾄ	1	[RW][HC][EXR]
-	524T3-86261		MAST,OUTER VFHM550 ｱｳﾀﾏｽﾄ	1	[RW][HC][EXR]
-	524T3-86271		MAST,OUTER VFHM600 ｱｳﾀﾏｽﾄ	1	[RW][HC][EXR]
-	524T3-86281		MAST,OUTER VFHM650 ｱｳﾀﾏｽﾄ	1	[RW][HC][EXR]
-	524T3-86291		MAST,OUTER VFHM700 ｱｳﾀﾏｽﾄ	1	[RW][HC][EXR]
-	524T3-86301		MAST,OUTER VFHM750 ｱｳﾀﾏｽﾄ	1	[RW][HC][EXR]
-	524T3-86311		MAST,OUTER VFHM800 ｱｳﾀﾏｽﾄ	1	[RW][HC][EXR]
2	04901-00160		FITTING ﾌｨｯﾃｨﾝｸﾞ	2	
3	224T0-70211		MAST,MIDDLE VFHM360 ﾐﾄﾞﾙﾏｽﾄ	1	
-	224T0-70221		MAST,MIDDLE VFHM400 ﾐﾄﾞﾙﾏｽﾄ	1	
-	224T0-70201		MAST,MIDDLE VFHM435 ﾐﾄﾞﾙﾏｽﾄ	1	
-	224T0-70231		MAST,MIDDLE VFHM480 ﾐﾄﾞﾙﾏｽﾄ	1	
-	224T0-70241		MAST,MIDDLE VFHM500 ﾐﾄﾞﾙﾏｽﾄ	1	
-	224T0-70251		MAST,MIDDLE VFHM540 ﾐﾄﾞﾙﾏｽﾄ	1	
-	224T0-70261		MAST,MIDDLE VFHM550 ﾐﾄﾞﾙﾏｽﾄ	1	
-	224T0-70271		MAST,MIDDLE VFHM600 ﾐﾄﾞﾙﾏｽﾄ	1	
-	224T0-70281		MAST,MIDDLE VFHM650 ﾐﾄﾞﾙﾏｽﾄ	1	
-	224T0-70291		MAST,MIDDLE VFHM700 ﾐﾄﾞﾙﾏｽﾄ	1	
-	224T0-70301		MAST,MIDDLE VFHM750 ﾐﾄﾞﾙﾏｽﾄ	1	
-	224T0-70311		MAST,MIDDLE VFHM800 ﾐﾄﾞﾙﾏｽﾄ	1	
4	224T0-73301		HEAD,PISTON ﾍｯﾄﾞ	2	
5	01103-22060		BOLT ﾎﾞﾙﾄ	8	
6	02011-00022		WASHER ﾜｯｼｬ	8	
7	224T0-73031		BRACKET ﾌﾞﾗｹｯﾄ	1	
8	01183-12030		BOLT ﾎﾞﾙﾄ	1	
9	22430-92201		PULLEY ﾌﾟｰﾘ	1	MAST NO.1-633
-	22430-92202		PULLEY ﾌﾟｰﾘ	1	MAST NO.634-
10	22430-92211		BOLT ﾎﾞﾙﾄ	1	MAST NO.1-633
-	22430-92212		BOLT ﾎﾞﾙﾄ	1	MAST NO.634-
11	224T0-70411		MAST,INNER VFHM360 ｲﾝﾅﾏｽﾄ	1	
-	224T0-70421		MAST,INNER VFHM400 ｲﾝﾅﾏｽﾄ	1	
-	224T0-70401		MAST,INNER VFHM435 ｲﾝﾅﾏｽﾄ	1	
-	224T0-70431		MAST,INNER VFHM480 ｲﾝﾅﾏｽﾄ	1	

FIG.207 MAST [VFHM24T]

(M4040710) マスト

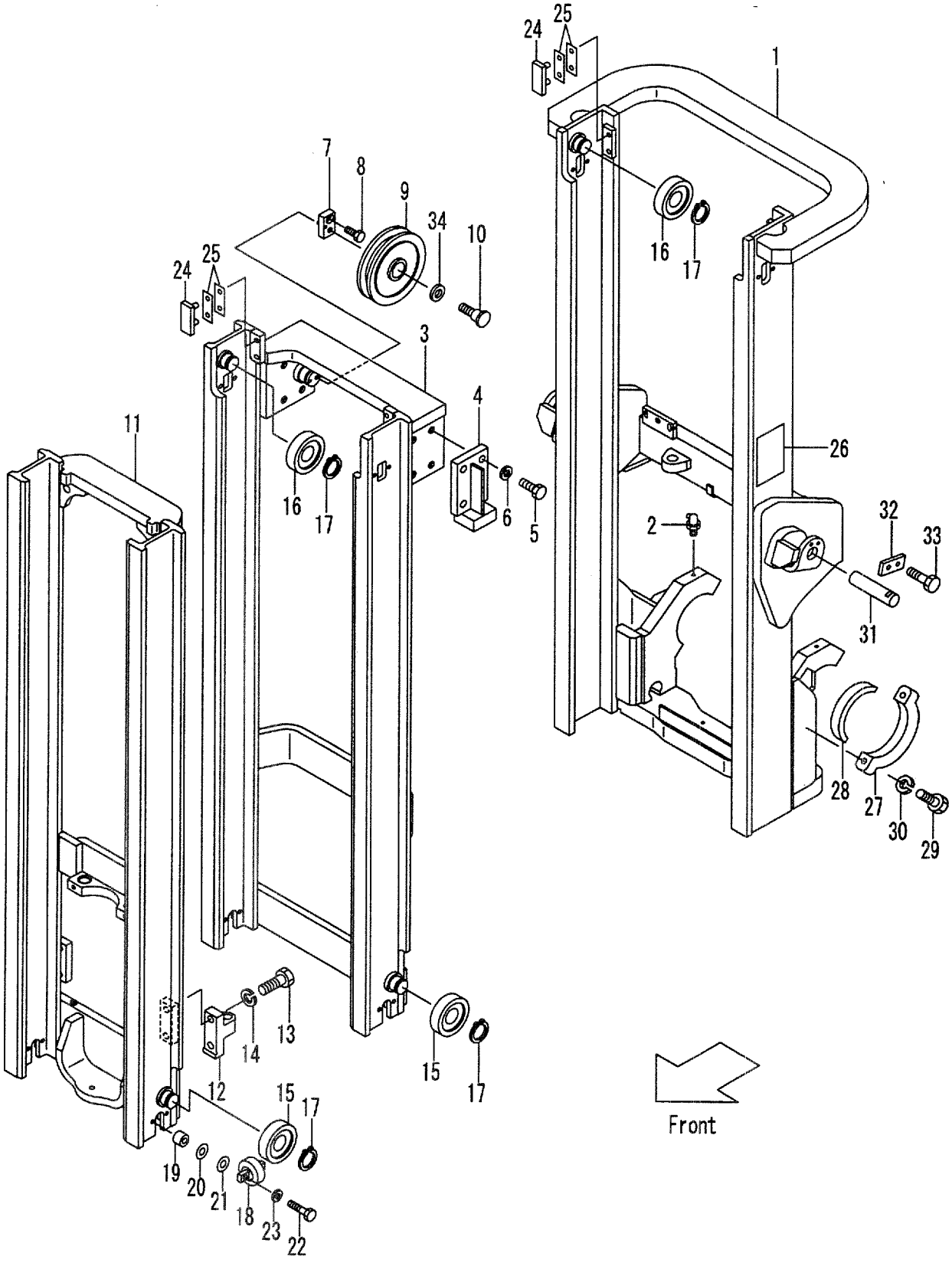

A:VFHM24T(FD35,FG35)
B:VFHM24T(FD40,FG40)

Item No	Part No.	Mark	Description		Req'd	Remarks : Serial No.
-	224T0-70441		MAST,INNER VFHM500	ｲﾝﾅﾏｽﾄ	1	
-	224T0-70451		MAST,INNER VFHM540	ｲﾝﾅﾏｽﾄ	1	
-	224T0-70461		MAST,INNER VFHM550	ｲﾝﾅﾏｽﾄ	1	
-	224T0-70471		MAST,INNER VFHM600	ｲﾝﾅﾏｽﾄ	1	
-	224T0-70481		MAST,INNER VFHM650	ｲﾝﾅﾏｽﾄ	1	
-	224T0-70491		MAST,INNER VFHM700	ｲﾝﾅﾏｽﾄ	1	
-	224T0-70501		MAST,INNER VFHM750	ｲﾝﾅﾏｽﾄ	1	
-	224T0-70511		MAST,INNER VFHM800	ｲﾝﾅﾏｽﾄ	1	
12	224T0-73121		BRACKET	ﾌﾞﾗｹｯﾄ	2	
13	01103-20055		BOLT	ﾎﾞﾙﾄ	4	
14	02011-00020		WASHER	ﾜｯｼｬ	4	
15	24609-42111		ROLLER,END,123.5	ﾛｰﾗ	4	
-	24609-42121		ROLLER,END,124.0	ﾛｰﾗ	(4)	
16	23458-22101		ROLLER,END.119	ﾛｰﾗ	4	(OLD PART)
-	277P8-22051		ROLLER,END.119	ﾛｰﾗ	4	(NEW PART)
17	02100-00045		RING,SNAP	ｽﾅｯﾌﾟﾘﾝｸﾞ	8	
18	23458-32051		ROLLER,SIDE	ﾛｰﾗ	8	MAST NO.1-825
-	23458-32052		ROLLER,SIDE	ﾛｰﾗ	8	MAST NO.826-
19	23818-30071		SPACER	ｽﾍﾟｰｻ	16	
20	22548-34051		SHIM,T-0.5	ｼﾑ	16	
21	22548-34061		SHIM,T-1.0	ｼﾑ	32	
22	01100-12040		BOLT	ﾎﾞﾙﾄ	16	MAST NO.1-825
-	01184-12045		BOLT	ﾎﾞﾙﾄ	16	MAST NO.826-
23	02010-00012		WASHER	ﾜｯｼｬ	16	
24	22678-32001		SLIPPER,T-4	ｽﾘｯﾊﾟ	4	
-	23460-72501		SLIPPER,T-6	ｽﾘｯﾊﾟ	(4)	
25	22679-43231		SHIM,T-0.5	ｼﾑ	28	
26	23678-06002		PLATE,NAME	ﾌﾟﾚｰﾄ	1	
27	224T8-02201		CAP	ｷｬｯﾌﾟ	2	
28	224T8-02001		BUSHING	ﾌﾞｯｼﾝｸﾞ	2	
29	01103-20085		BOLT	ﾎﾞﾙﾄ	4	
30	02010-00020		WASHER	ﾜｯｼｬ	4	
31	224T8-52501		PIN	ﾋﾟﾝ	2	
32	23648-50161		PLATE	ﾌﾟﾚｰﾄ	2	
33	01184-10020		BOLT	ﾎﾞﾙﾄ	4	
34	02000-00020		WASHER	ﾜｯｼｬ	1	MAST NO.634-
35	224T0-93301	+	CHART,CAPACITY	ﾁｬｰﾄ	1	A (VFHM360-540)
-	224T0-93311	+	CHART,CAPACITY	ﾁｬｰﾄ	1	A (VFHM550-700)
-	224T0-93341	+	CHART,CAPACITY	ﾁｬｰﾄ	1	B (VFHM360-540)
-	224T0-93351	+	CHART,CAPACITY	ﾁｬｰﾄ	1	B (VFHM550-700)
-	224T0-93361	+	CHART,CAPACITY	ﾁｬｰﾄ	1	A [EXA/VFHM360-540]
-	224T0-93371	+	CHART,CAPACITY	ﾁｬｰﾄ	1	A [EXA/VFHM550-700]
-	224T0-93401	+	CHART,CAPACITY	ﾁｬｰﾄ	1	B [EXA/VFHM360-540]

FIG.207 MAST [VFHM24T]

(M4040710) マスト

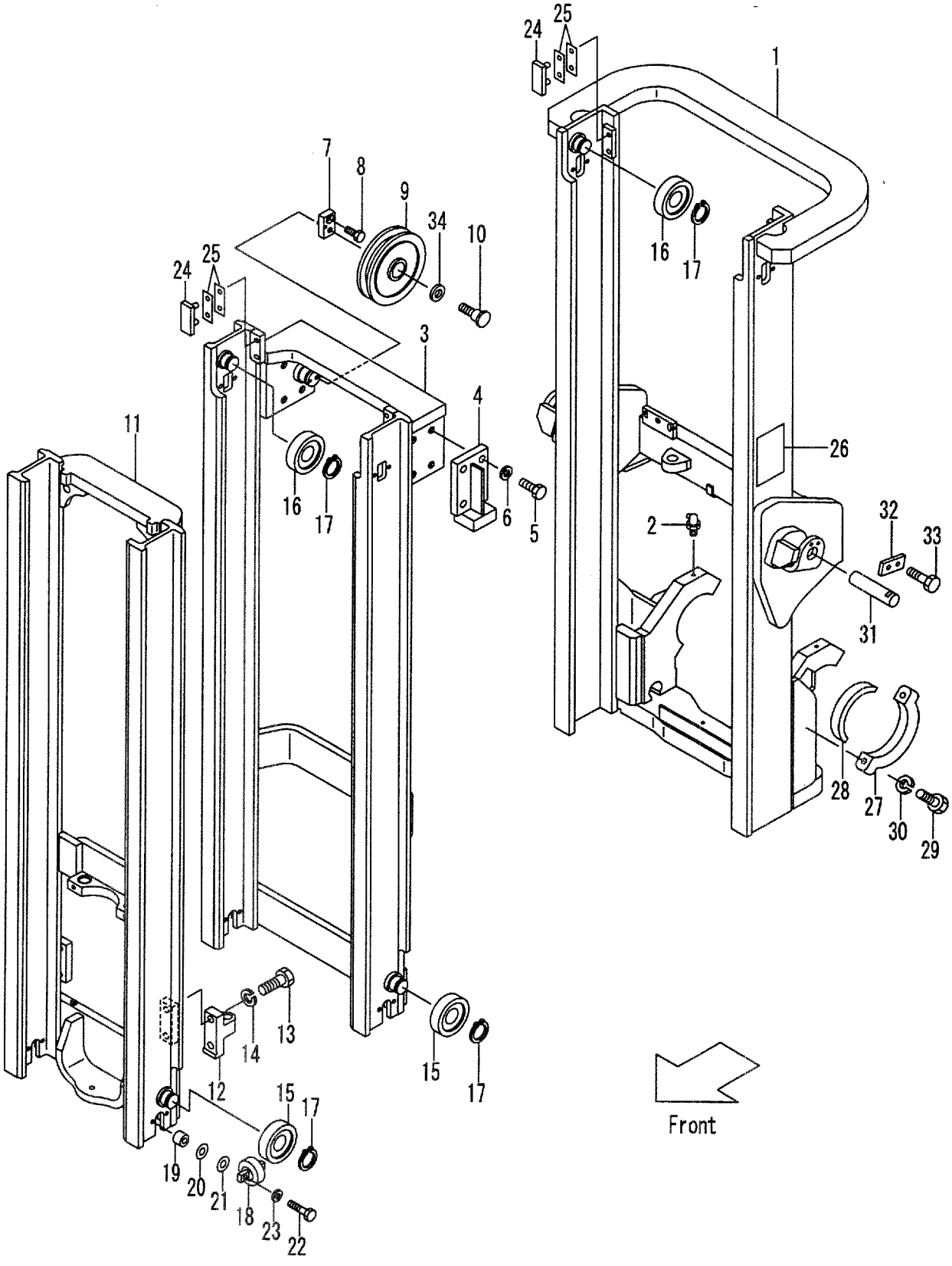

A:VFHM24T(FD35,FG35)
B:VFHM24T(FD40,FG40)

Item No	Part No.	Mark	Description	Req'd	Remarks : Serial No.
-	224T0-93411	+	CHART,CAPACITY チャート	1	B [EXA/VFHM550-700]
-	514A3-82301	+	CHART,CAPACITY チャート	1	[EXB][EXC][EXE][EXN]
-	524T3-84031	+	CHART,CAPACITY チャート	1	(RUSSIAN)
-	514A3-82341	+	CHART,CAPACITY チャート	1	(FRENCH)
-	514A3-82331	+	CHART,CAPACITY チャート	1	(SPANISH)
-	514A3-82361	+	CHART,CAPACITY チャート	1	(DANISH)
-	514A3-82381	+	CHART,CAPACITY チャート	1	(GREEK)
-	514A3-82371	+	CHART,CAPACITY チャート	1	(ITALIAN)
-	514A3-82351	+	CHART,CAPACITY チャート	1	(DUTCH)
-	514A3-82391	+	CHART,CAPACITY チャート	1	(PORTUGUESE)
-	529F3-82101	+	CHART,CAPACITY チャート	1	(FINNISH)

FIG.208 LAMP GUARD [(HL,HLG/HL,BKH)/VFHM24T](OLD PART)

(M40483C0) ﾗﾝﾌﾟｶﾞｰﾄﾞ

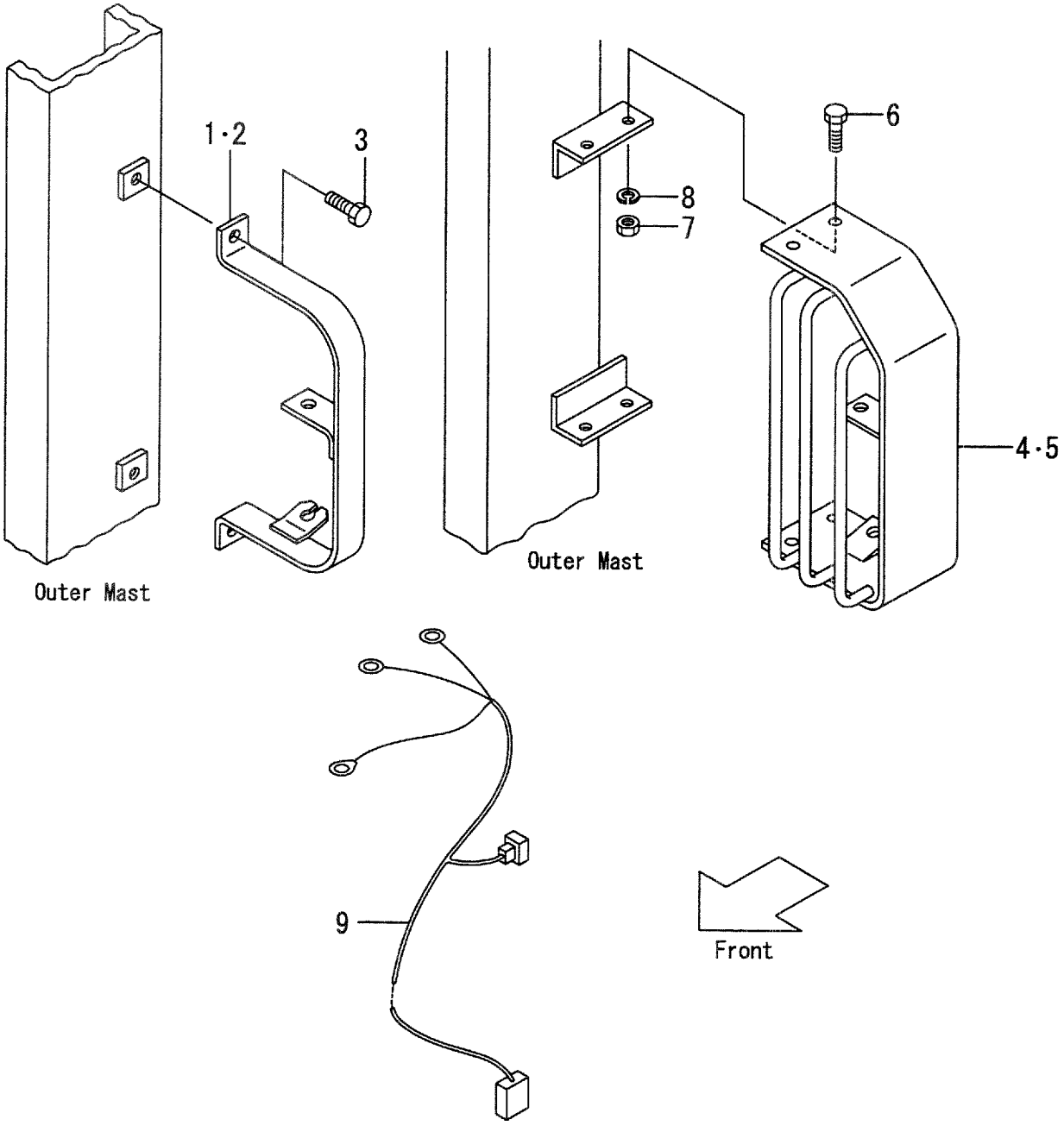

A:VFHM24T(FD35,FG35)
B:VFHM24T(FD40,FG40)

FIG.208
(M40483C0)

Item No	Part No.	Mark	Description		Req'd	Remarks : Serial No.
1	214A2-43121		BRACKET,LH	ﾌﾞﾗｹｯﾄ	1	[HL]
-	224W2-43001		BRACKET,LH	ﾌﾞﾗｹｯﾄ	1	[HL/RW]
2	214A2-43131		BRACKET,RH	ﾌﾞﾗｹｯﾄ	1	[HL]
-	224W2-43011		BRACKET,RH	ﾌﾞﾗｹｯﾄ	1	[HL/RW]
3	01184-12020		BOLT	ﾎﾞﾙﾄ	4	[HL][HL/RW]
4	210F2-42051		GUARD,HEAD-LAMP,LH	ｶﾞｰﾄﾞ	1	[HLG/HL][BKH]
-	224W2-43031		GUARD,HEAD-LAMP,LH	ｶﾞｰﾄﾞ	1	[HLG/RW/HL][BKH/RW]
5	210F2-42071		GUARD,HEAD-LAMP,RH	ｶﾞｰﾄﾞ	1	[HLG/HL][BKH]
-	224W2-43081		GUARD,HEAD-LAMP,RH	ｶﾞｰﾄﾞ	1	[HLG/RW/HL][BKH/RW]
6	01100-12030		BOLT	ﾎﾞﾙﾄ	8	[HLG/HL][BKH][HLG/RW/HL]
7	02010-00012		WASHER	ﾜｯｼｬ	8	[HLG/HL][BKH][HLG/RW/HL]
8	01400-00012		NUT	ﾅｯﾄ	8	[HLG/HL][BKH][HLG/RW/HL]
9	224W2-43081		WIRE-HARNESS	ﾜｲﾔﾊｰﾈｽ	2	[HL/VFHM360-435] [HL/RW/VFHM360-435]
-	224W2-43081		WIRE-HARNESS	ﾜｲﾔﾊｰﾈｽ	2	[HLG/HL/VFHM360-435] [HLG/RW/HL/VFHM360-435]
-	224W2-43081		WIRE-HARNESS	ﾜｲﾔﾊｰﾈｽ	2	[BKH/VFHM360-435] [BKH/RW/VFHM360-435]
-	224W2-43091		WIRE-HARNESS	ﾜｲﾔﾊｰﾈｽ	2	[HL/VFHM480-800] [HL/RW/VFHM480-800]
-	224W2-43091		WIRE-HARNESS	ﾜｲﾔﾊｰﾈｽ	2	[HLG/HL/VFHM480-800] [HLG/RW/HL/VFHM480-800]
-	224W2-43091		WIRE-HARNESS	ﾜｲﾔﾊｰﾈｽ	2	[BKH/VFHM480-800] [BKH/RW/VFHM480-800]

FIG.208A LAMP GUARD [(HL,BKH)/VFHM24T](NEW PART)

(M40483C1) ﾗﾝﾌﾟｶﾞｰﾄﾞ

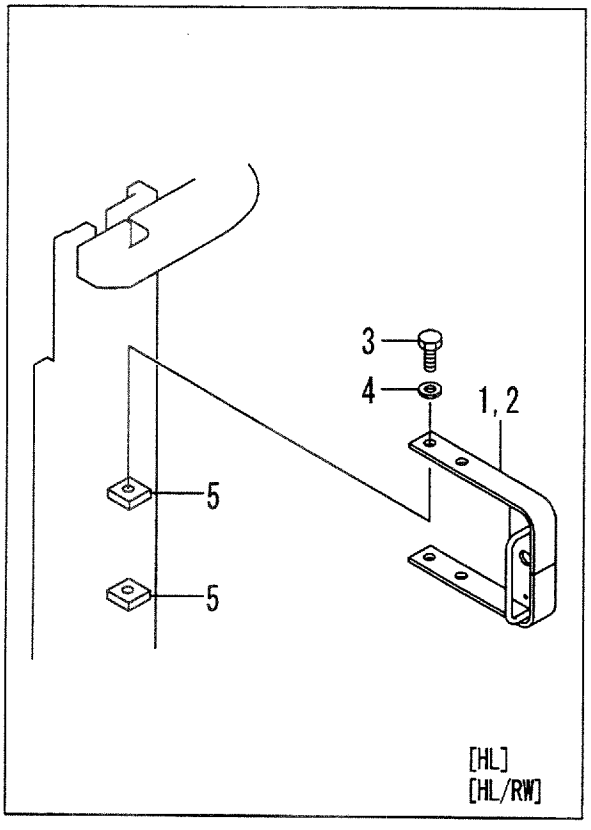

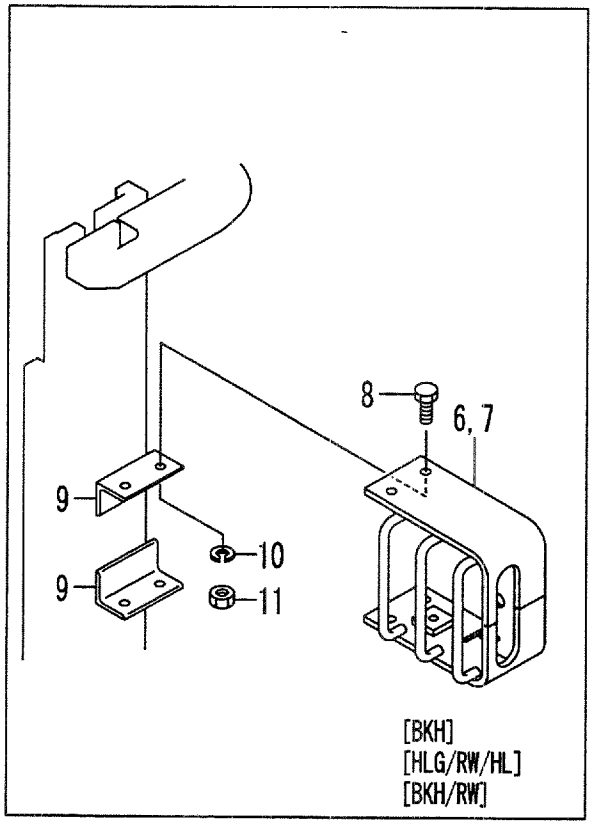

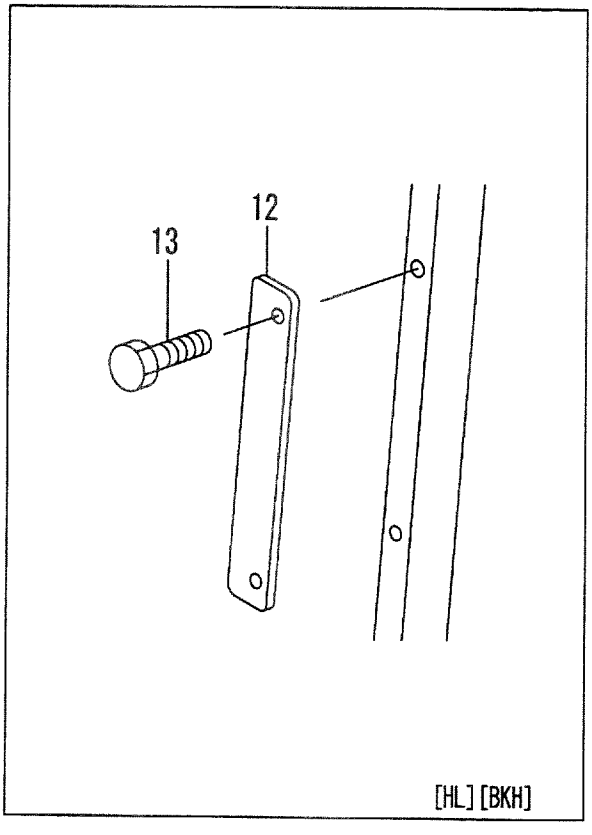

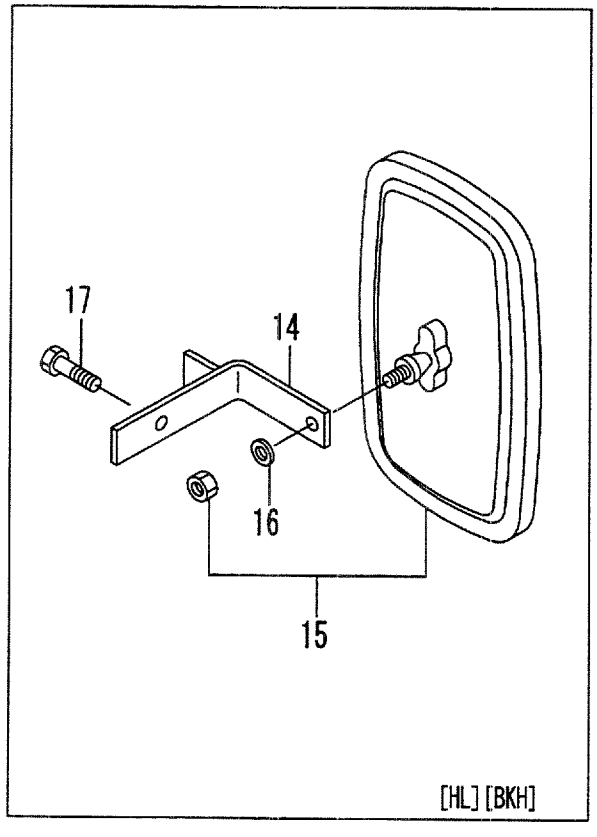

A:VFHM24T (FD35, FG35)
B:VFHM24T (FD40, FG40)

FIG.208A
(M40483C1)

Item No	Part No.	Mark	Description		Req'd	Remarks : Serial No.
1	534A9-22011		BRACKET,LH	ﾌﾞﾗｹｯﾄ	1	[HL]
-	224W2-43001		BRACKET,LH	ﾌﾞﾗｹｯﾄ	1	[HL/RW]
2	534A9-22001		BRACKET,RH	ﾌﾞﾗｹｯﾄ	1	[HL]
-	224W2-43011		BRACKET,RH	ﾌﾞﾗｹｯﾄ	1	[HL/RW]
3	01100-12020		BOLT	ﾎﾞﾙﾄ	4	[HL]
-	01184-12020		BOLT & WASHER	ﾎﾞﾙﾄ&ﾜｯｼｬ	4	[HL/RW]
4	02010-00012		WASHER	ﾜｯｼｬ	4	[HL]
5	534A9-22101		BLOCK,TAPPED	ﾌﾞﾛｯｸ	4	[HL]
-	22679-47861		BLOCK,TAPPED	ﾌﾞﾛｯｸ	4	[HL/RW]
6	534A4-22011		GUARD,LH	ｶﾞｰﾄﾞ	1	[BKH]
-	224W2-43031		GUARD,LH	ｶﾞｰﾄﾞ	1	[HLG/RW/HL][BKH/RW]
7	534A4-22001		GUARD,RH	ｶﾞｰﾄﾞ	1	[BKH]
-	224W2-43041		GUARD,RH	ｶﾞｰﾄﾞ	1	[HLG/RW/HL][BKH/RW]
8	01184-12020		BOLT & WASHER	ﾎﾞﾙﾄ&ﾜｯｼｬ	8	[BKH]
-	01100-12030		BOLT	ﾎﾞﾙﾄ	8	[HLG/RW/HL][BKH/RW]
9	534A4-22101		BRACKET	ﾌﾞﾗｹｯﾄ	4	[BKH]
-	214A2-43081		BRACKET	ﾌﾞﾗｹｯﾄ	4	[HLG/RW/HL][BKH/RW]
10	02010-00012		WASHER	ﾜｯｼｬ	8	[HLG/RW/HL][BKH/RW]
11	01400-00012		NUT	ﾅｯﾄ	8	[HLG/RW/HL][BKH/RW]
12	534A9-22301		PLATE	ﾌﾟﾚｰﾄ	2	[HL][BKH]
13	01100-08012		BOLT	ﾎﾞﾙﾄ	4	[HL][BKH]
14	535C9-22401		BRACKET	ﾌﾞﾗｹｯﾄ	2	[HL][BKH]
15	239A9-92001		MIRROR	ﾐﾗｰ	2	[HL][BKH]
16	222A9-32011		WASHER	ﾜｯｼｬ	2	[HL][BKH]
17	514A5-12021		BOLT	ﾎﾞﾙﾄ	2	[HL][BKH]
18	535C9-22301	+	WIRE-HARNESS	ﾜｲﾔﾊｰﾈｽ	2	[HL][BKH]
-	224W2-43081	+	WIRE-HARNESS	ﾜｲﾔﾊｰﾈｽ	2	(HL/RW,HLG/RW/HL,BKH/RW) /VFHM360-435
-	224W2-43091	+	WIRE-HARNESS	ﾜｲﾔﾊｰﾈｽ	2	(HL/RW,HLG/RW/HL,BKH/RW) /VFHM480-800
19	27732-42221	+	CLAMP	ｸﾗﾝﾌﾟ	4	[HL][BKH]
20	04913-11380	+	BAND	ﾊﾞﾝﾄﾞ	6	[HL][BKH]

FIG.209 LIFT CYLINDER (FRONT)[VFHM24T]

(M4040810) リフトシリンダ

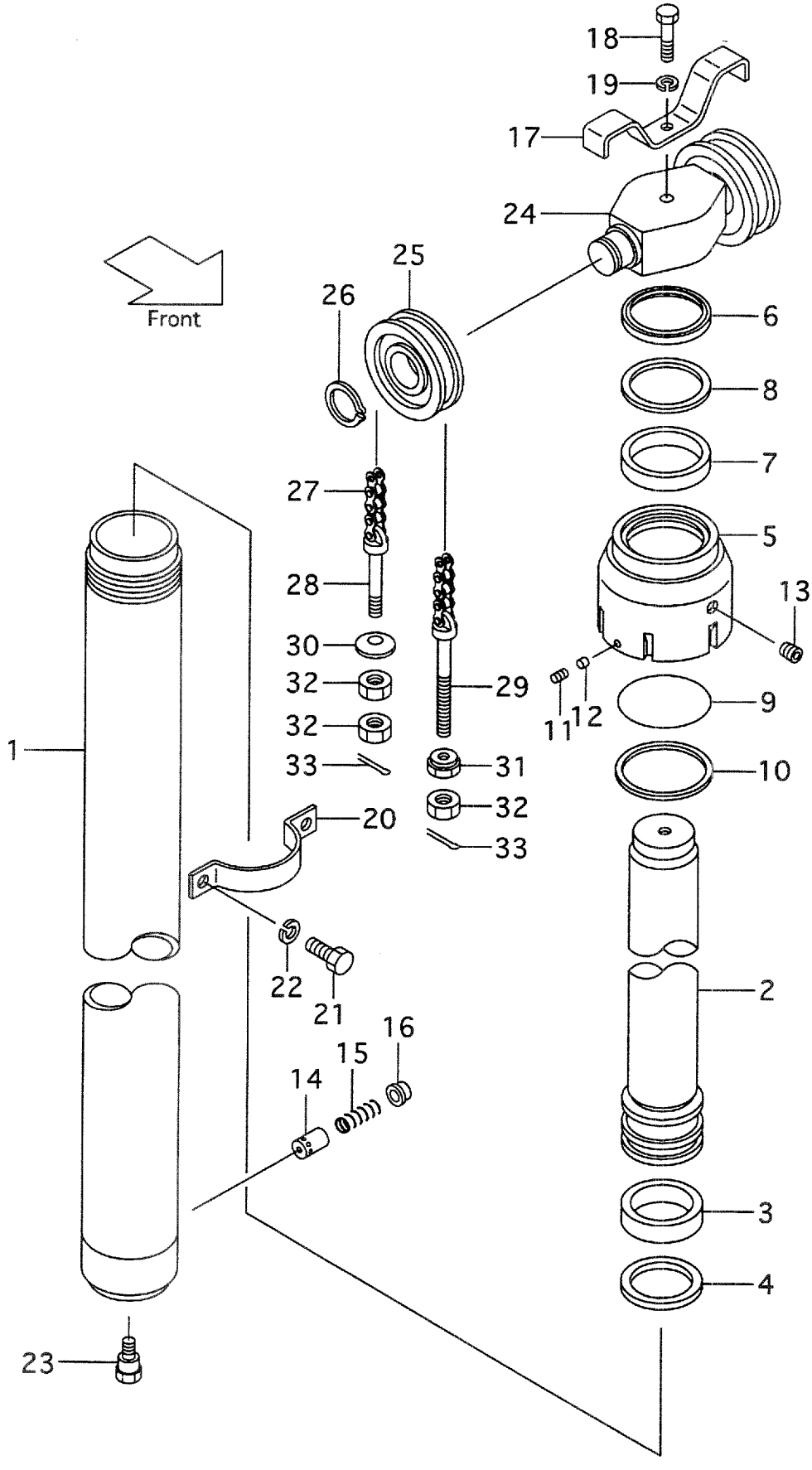

A:VFHM24T(FD35,FG35)
B:VFHM24T(FD40,FG40)

FIG.209
(M4040810)

Item No	Part No.	Mark	Description	Req'd	Remarks : Serial No.
A1	224T0-80011		CYL-ASSY,LIFT VFHM360 ﾘﾌﾄｼﾘﾝﾀﾞｱｯｾﾝ	1	MAST NO.1-793 INC.1-16
-	224T0-80012		CYL-ASSY,LIFT VFHM360 ﾘﾌﾄｼﾘﾝﾀﾞｱｯｾﾝ	1	MAST NO.794- INC.1-16
-	224T0-80021		CYL-ASSY,LIFT VFHM400 ﾘﾌﾄｼﾘﾝﾀﾞｱｯｾﾝ	1	MAST NO.1-793 INC.1-16
-	224T0-80022		CYL-ASSY,LIFT VFHM400 ﾘﾌﾄｼﾘﾝﾀﾞｱｯｾﾝ	1	MAST NO.794- INC.1-16
-	224T0-80001		CYL-ASSY,LIFT VFHM435 ﾘﾌﾄｼﾘﾝﾀﾞｱｯｾﾝ	1	MAST NO.1-793 INC.1-16
-	224T0-80002		CYL-ASSY,LIFT VFHM435 ﾘﾌﾄｼﾘﾝﾀﾞｱｯｾﾝ	1	MAST NO.794- INC.1-16
-	224T0-80031		CYL-ASSY,LIFT VFHM480 ﾘﾌﾄｼﾘﾝﾀﾞｱｯｾﾝ	1	MAST NO.1-793 INC.1-16
-	224T0-80032		CYL-ASSY,LIFT VFHM480 ﾘﾌﾄｼﾘﾝﾀﾞｱｯｾﾝ	1	MAST NO.794- INC.1-16
-	224T0-80041		CYL-ASSY,LIFT VFHM500 ﾘﾌﾄｼﾘﾝﾀﾞｱｯｾﾝ	1	MAST NO.1-793 INC.1-16
-	224T0-80042		CYL-ASSY,LIFT VFHM500 ﾘﾌﾄｼﾘﾝﾀﾞｱｯｾﾝ	1	MAST NO.794- INC.1-16
-	224T0-80051		CYL-ASSY,LIFT VFHM540 ﾘﾌﾄｼﾘﾝﾀﾞｱｯｾﾝ	1	MAST NO.1-793 INC.1-16
-	224T0-80052		CYL-ASSY,LIFT VFHM540 ﾘﾌﾄｼﾘﾝﾀﾞｱｯｾﾝ	1	MAST NO.794- INC.1-16
-	224T0-80061		CYL-ASSY,LIFT VFHM550 ﾘﾌﾄｼﾘﾝﾀﾞｱｯｾﾝ	1	MAST NO.1-793 INC.1-16
-	224T0-80062		CYL-ASSY,LIFT VFHM550 ﾘﾌﾄｼﾘﾝﾀﾞｱｯｾﾝ	1	MAST NO.794- INC.1-16
-	224T0-80071		CYL-ASSY,LIFT VFHM600 ﾘﾌﾄｼﾘﾝﾀﾞｱｯｾﾝ	1	MAST NO.1-793 INC.1-16
-	224T0-80072		CYL-ASSY,LIFT VFHM600 ﾘﾌﾄｼﾘﾝﾀﾞｱｯｾﾝ	1	MAST NO.794- INC.1-16
-	224T0-80081		CYL-ASSY,LIFT VFHM650 ﾘﾌﾄｼﾘﾝﾀﾞｱｯｾﾝ	1	MAST NO.1-793 INC.1-16
-	224T0-80082		CYL-ASSY,LIFT VFHM650 ﾘﾌﾄｼﾘﾝﾀﾞｱｯｾﾝ	1	MAST NO.794- INC.1-16
-	224T0-80091		CYL-ASSY,LIFT VFHM700 ﾘﾌﾄｼﾘﾝﾀﾞｱｯｾﾝ	1	MAST NO.1-793 INC.1-16
-	224T0-80092		CYL-ASSY,LIFT VFHM700 ﾘﾌﾄｼﾘﾝﾀﾞｱｯｾﾝ	1	MAST NO.794- INC.1-16
-	224T0-80101		CYL-ASSY,LIFT VFHM750 ﾘﾌﾄｼﾘﾝﾀﾞｱｯｾﾝ	1	MAST NO.1-793 INC.1-16
-	224T0-80102		CYL-ASSY,LIFT VFHM750 ﾘﾌﾄｼﾘﾝﾀﾞｱｯｾﾝ	1	MAST NO.794- INC.1-16
-	224T0-80111		CYL-ASSY,LIFT VFHM800 ﾘﾌﾄｼﾘﾝﾀﾞｱｯｾﾝ	1	MAST NO.1-793 INC.1-16
-	224T0-80112		CYL-ASSY,LIFT VFHM800 ﾘﾌﾄｼﾘﾝﾀﾞｱｯｾﾝ	1	MAST NO.794- INC.1-16
1	224T0-80211		TUBE VFHM360 ﾁｭｰﾌﾞ	1	
-	224T0-80221		TUBE VFHM400 ﾁｭｰﾌﾞ	1	

FIG.209 LIFT CYLINDER (FRONT)[VFHM24T]

(M4040810) リフトシリンダ

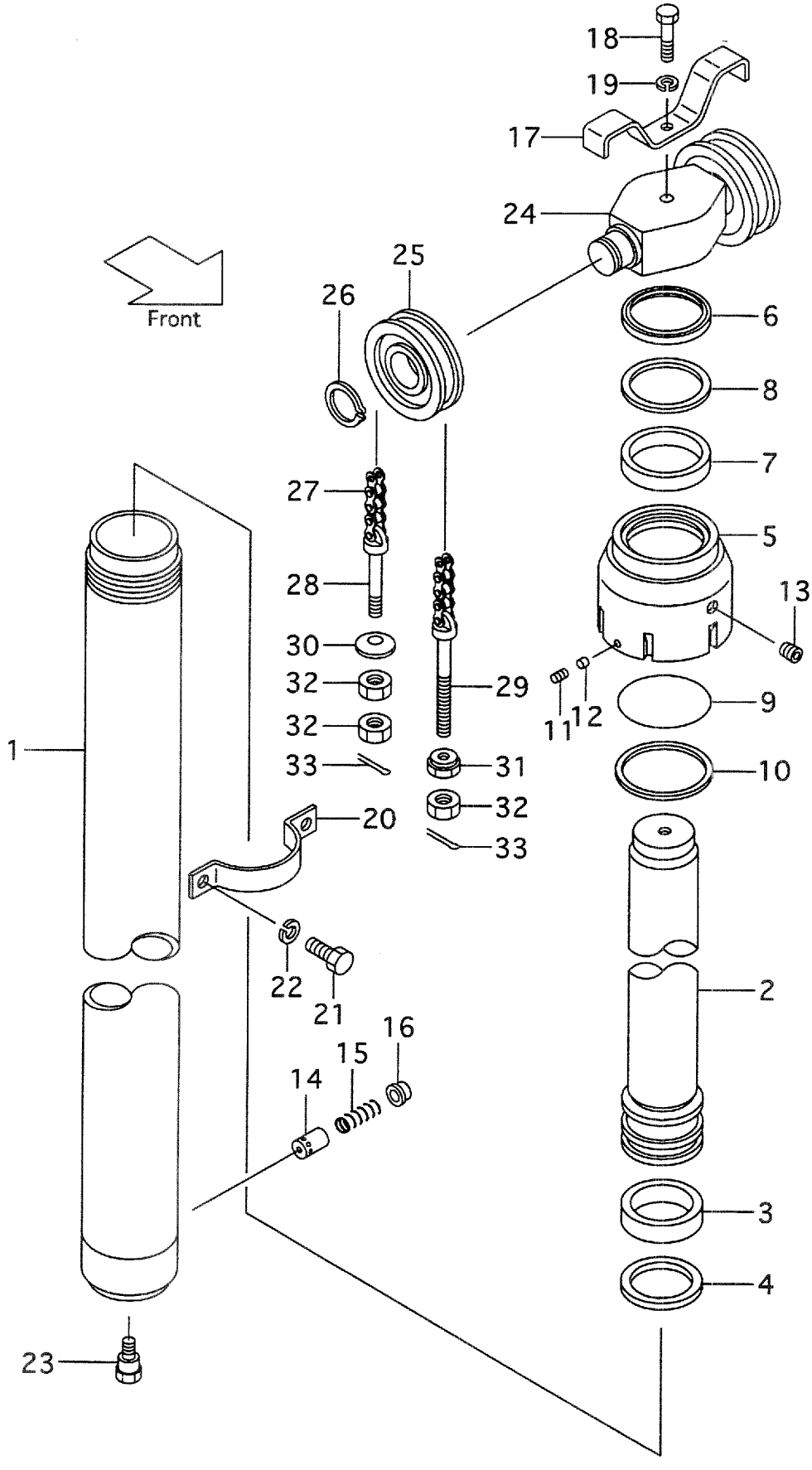

A:VFHM24T(FD35,FG35)
B:VFHM24T(FD40,FG40)

FIG.209
(M4040810)

Item No	Part No.	Mark	Description		Req'd	Remarks : Serial No.
-	224T0-80201		TUBE VFHM435	ﾁｭｰﾌﾞ	1	
-	224T0-80231		TUBE VFHM480	ﾁｭｰﾌﾞ	1	
-	224T0-80241		TUBE VFHM500	ﾁｭｰﾌﾞ	1	
-	224T0-80251		TUBE VFHM540	ﾁｭｰﾌﾞ	1	
-	224T0-80261		TUBE VFHM550	ﾁｭｰﾌﾞ	1	
-	224T0-80271		TUBE VFHM600	ﾁｭｰﾌﾞ	1	
-	224T0-80281		TUBE VFHM650	ﾁｭｰﾌﾞ	1	
-	224T0-80291		TUBE VFHM700	ﾁｭｰﾌﾞ	1	
-	224T0-80301		TUBE VFHM750	ﾁｭｰﾌﾞ	1	
-	224T0-80311		TUBE VFHM800	ﾁｭｰﾌﾞ	1	
2	224T0-80411		ROD,PISTON VFHM360	ﾛｯﾄﾞ	1	
-	224T0-80421		ROD,PISTON VFHM400	ﾛｯﾄﾞ	1	
-	224T0-80401		ROD,PISTON VFHM435	ﾛｯﾄﾞ	1	
-	224T0-80431		ROD,PISTON VFHM480	ﾛｯﾄﾞ	1	
-	224T0-80441		ROD,PISTON VFHM500	ﾛｯﾄﾞ	1	
-	224T0-80451		ROD,PISTON VFHM540	ﾛｯﾄﾞ	1	
-	224T0-80461		ROD,PISTON VFHM550	ﾛｯﾄﾞ	1	
-	224T0-80471		ROD,PISTON VFHM600	ﾛｯﾄﾞ	1	
-	224T0-80481		ROD,PISTON VFHM650	ﾛｯﾄﾞ	1	
-	224T0-80491		ROD,PISTON VFHM700	ﾛｯﾄﾞ	1	
-	224T0-80501		ROD,PISTON VFHM750	ﾛｯﾄﾞ	1	
-	224T0-80511		ROD,PISTON VFHM800	ﾛｯﾄﾞ	1	
3	22250-52931	*	WEARING	ｳｴｱﾘﾝｸﾞ	1	
4	24320-58491	*	SEAL	ｼｰﾙ	1	
5	224T0-82501		CAP	ｷｬｯﾌﾟ	1	
6	224T0-82531	*	SEAL	ｼｰﾙ	1	
7	224T0-82511	*	PACKING	ﾊﾟｯｷﾝｸﾞ	1	
8	224T0-82521	*	RING	ﾘﾝｸﾞ	1	
9	03350-01250	*	O-RING	Oﾘﾝｸﾞ	1	
10	224T0-82541	*	RING	ﾘﾝｸﾞ	1	
11	25908-44101		PLUG	ﾌﾟﾗｸﾞ	1	
12	25908-44111		PLUG,NYLON	ﾌﾟﾗｸﾞ	1	
13	22518-40151		PLUG	ﾌﾟﾗｸﾞ	1	
14	24389-46011		PISTON	ﾋﾟｽﾄﾝ	1	
15	24389-46021		SPRING	ｽﾌﾟﾘﾝｸﾞ	1	MAST NO.1-793
-	224T0-53451		SPRING	ｽﾌﾟﾘﾝｸﾞ	1	MAST NO.794-
16	24310-82641		RETAINER	ﾘﾃｰﾅ	1	
17	24310-82291		STOPPER	ｽﾄｯﾊﾟ	1	
18	01103-16070		BOLT	ﾎﾞﾙﾄ	1	
19	02011-00016		WASHER	ﾜｯｼｬ	1	
20	224T0-82421		SUPPORT	ｻﾎﾟｰﾄ	1	
21	01103-12025		BOLT	ﾎﾞﾙﾄ	2	
22	02011-00012		WASHER	ﾜｯｼｬ	2	
23	224T0-82561		BOLT	ﾎﾞﾙﾄ	1	
A2	24310-80271		HEAD-ASSY,PISTON	ﾋﾟｽﾄﾝﾍｯﾄﾞｱｯｾﾝ	1	INC.24-26
24	24310-82281		HEAD,PISTON	ﾍｯﾄﾞ	1	
25	24609-41241		SHEAVE	ｼｰﾌﾞ	2	
26	02100-00050		RING,SNAP	ｽﾅｯﾌﾟﾘﾝｸﾞ	2	
27	23918-45531		CHAIN,LEAF VFHM360	ﾁｪｰﾝ	2	
-	23918-45571		CHAIN,LEAF VFHM400	ﾁｪｰﾝ	2	

FIG.209 LIFT CYLINDER (FRONT)[VFHM24T]

(M4040810) リフトシリンダ

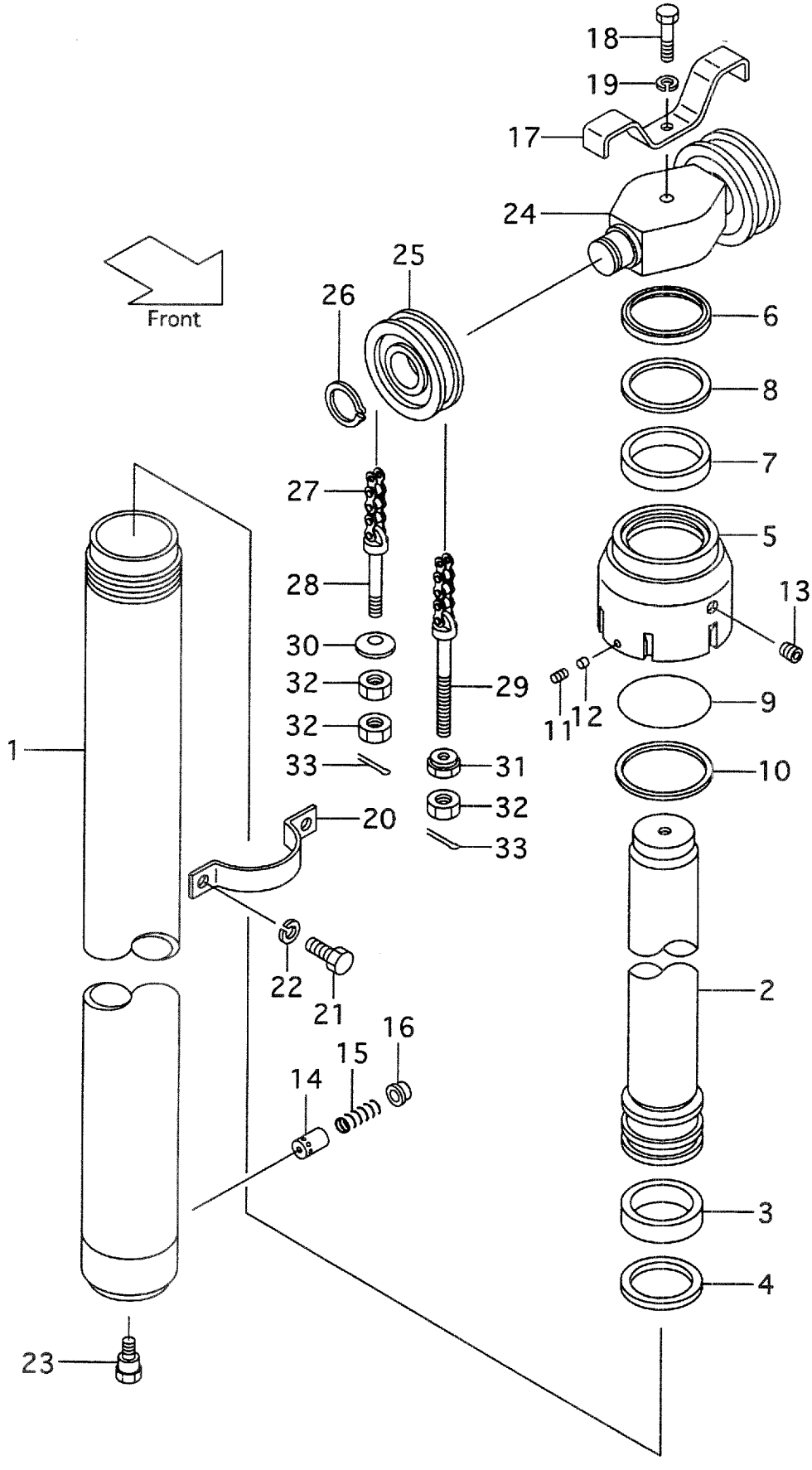

A : VFHM24T (FD35, FG35)
B : VFHM24T (FD40, FG40)

Item No	Part No.	Mark	Description	Req'd	Remarks : Serial No.
-	23918-45591		CHAIN,LEAF VFHM435 チェーン	2	
-	23918-45631		CHAIN,LEAF VFHM480 チェーン	2	
-	23918-45671		CHAIN,LEAF VFHM500 チェーン	2	
-	23918-45711		CHAIN,LEAF VFHM540 チェーン	2	
-	23918-45731		CHAIN,LEAF VFHM550 チェーン	2	
-	23918-45791		CHAIN,LEAF VFHM600 チェーン	2	
-	23918-45891		CHAIN,LEAF VFHM650 チェーン	2	
-	23918-45951		CHAIN,LEAF VFHM700 チェーン	2	
-	23918-46031		CHAIN,LEAF VFHM750 チェーン	2	
-	23918-46111		CHAIN,LEAF VFHM800 チェーン	2	
28	24329-45441		PIN ピン	2	
29	23918-42681		PIN ピン	2	
30	24319-45751		CONE コーン	2	
31	23818-30271		NUT ナット	2	
32	01402-00022		NUT ナット	6	
33	02200-03040		PIN,COTTER ピン	4	
K1	224T0-59801		KIT,OVERHAUL オーバホールキット	1	INC.3,4,6-10

FIG.210 LIFT CYLINDER (REAR)[VFHM24T]

(M4040840) リフトシリンダ

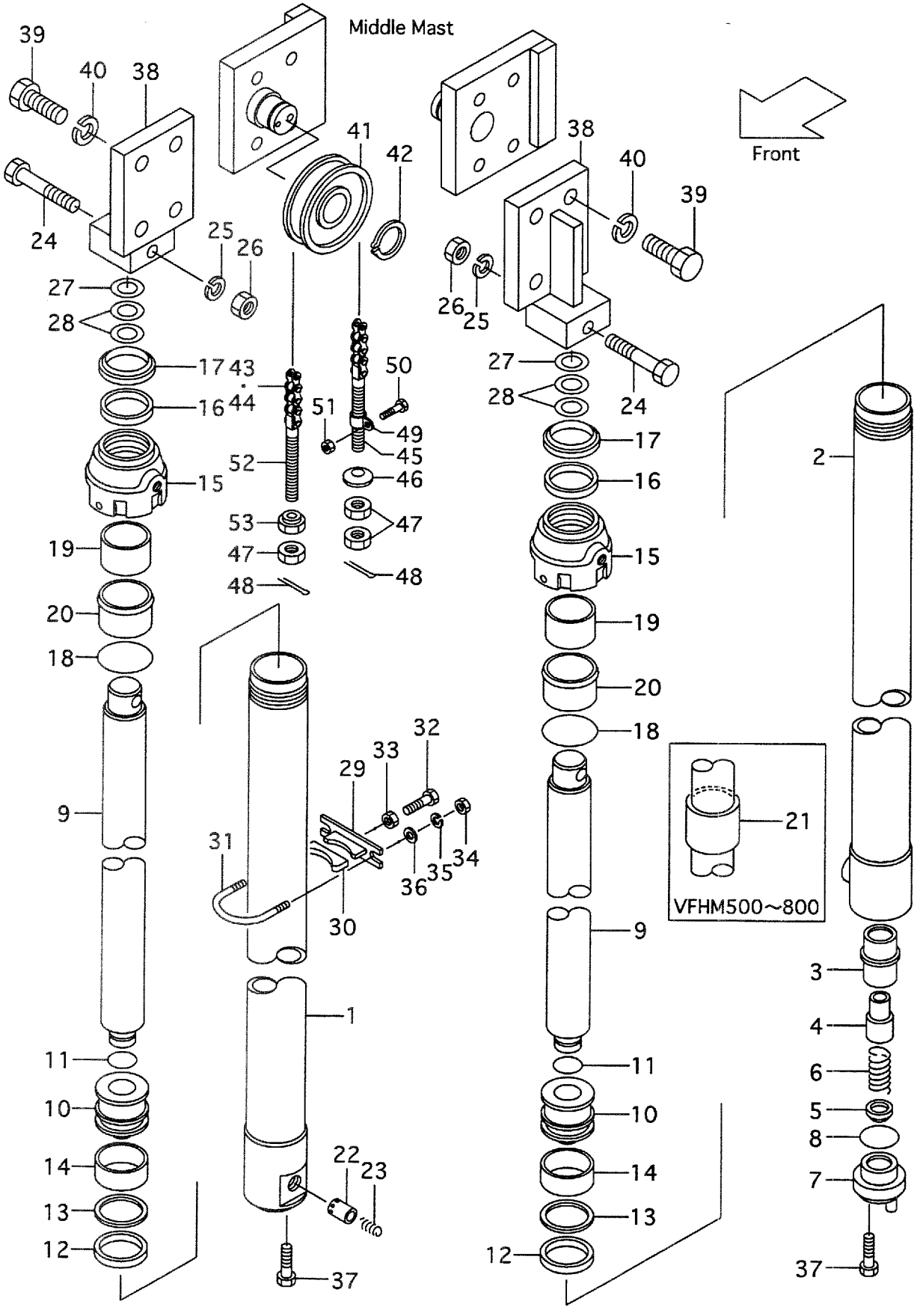

A:VFHM24T(FD35,FG35)
B:VFHM24T(FD40,FG40)

FIG.210
(M4040840)

Item No	Part No.	Mark	Description	Req'd	Remarks : Serial No.
A1	224T0-81011		CYL-ASSY,LIFT,RH VFHM360 リフトシリンダアッセン	1	INC.1-20
-	224T0-81021		CYL-ASSY,LIFT,RH VFHM400 リフトシリンダアッセン	1	INC.1-20
-	224T0-81001		CYL-ASSY,LIFT,RH VFHM435 リフトシリンダアッセン	1	INC.1-20
-	224T0-81031		CYL-ASSY,LIFT,RH VFHM480 リフトシリンダアッセン	1	INC.1-20
-	224T0-81041		CYL-ASSY,LIFT,RH VFHM500 リフトシリンダアッセン	1	INC.1-20
-	224T0-81051		CYL-ASSY,LIFT,RH VFHM540 リフトシリンダアッセン	1	INC.1-20
-	224T0-81061		CYL-ASSY,LIFT,RH VFHM550 リフトシリンダアッセン	1	INC.1-20
-	224T0-81071		CYL-ASSY,LIFT,RH VFHM600 リフトシリンダアッセン	1	INC.1-20
-	224T0-81081		CYL-ASSY,LIFT,RH VFHM650 リフトシリンダアッセン	1	INC.1-20
-	224T0-81091		CYL-ASSY,LIFT,RH VFHM700 リフトシリンダアッセン	1	INC.1-20
-	224T0-81101		CYL-ASSY,LIFT,RH VFHM750 リフトシリンダアッセン	1	INC.1-20
-	224T0-81111		CYL-ASSY,LIFT,RH VFHM800 リフトシリンダアッセン	1	INC.1-20
-	224T0-81211		CYL-ASSY,LIFT,LH VFHM360 リフトシリンダアッセン	1	INC.2-20
-	224T0-81221		CYL-ASSY,LIFT,LH VFHM400 リフトシリンダアッセン	1	INC.2-20
-	224T0-81201		CYL-ASSY,LIFT,LH VFHM435 リフトシリンダアッセン	1	INC.2-20
-	224T0-81231		CYL-ASSY,LIFT,LH VFHM480 リフトシリンダアッセン	1	INC.2-20
-	224T0-81241		CYL-ASSY,LIFT,LH VFHM500 リフトシリンダアッセン	1	INC.2-20
-	224T0-81251		CYL-ASSY,LIFT,LH VFHM540 リフトシリンダアッセン	1	INC.2-20
-	224T0-81261		CYL-ASSY,LIFT,LH VFHM550 リフトシリンダアッセン	1	INC.2-20
-	224T0-81271		CYL-ASSY,LIFT,LH VFHM600 リフトシリンダアッセン	1	INC.2-20
-	224T0-81281		CYL-ASSY,LIFT,LH VFHM650 リフトシリンダアッセン	1	INC.2-20
-	224T0-81291		CYL-ASSY,LIFT,LH VFHM700 リフトシリンダアッセン	1	INC.2-20
-	224T0-81301		CYL-ASSY,LIFT,LH VFHM750 リフトシリンダアッセン	1	INC.2-20
-	224T0-81311		CYL-ASSY,LIFT,LH VFHM800 リフトシリンダアッセン	1	INC.2-20
1	224T0-81412		TUBE,RH VFHM360 チューブ	1	
-	224T0-81422		TUBE,RH VFHM400 チューブ	1	

FIG.210 LIFT CYLINDER (REAR)[VFHM24T]

(M4040840) リフトシリンダ

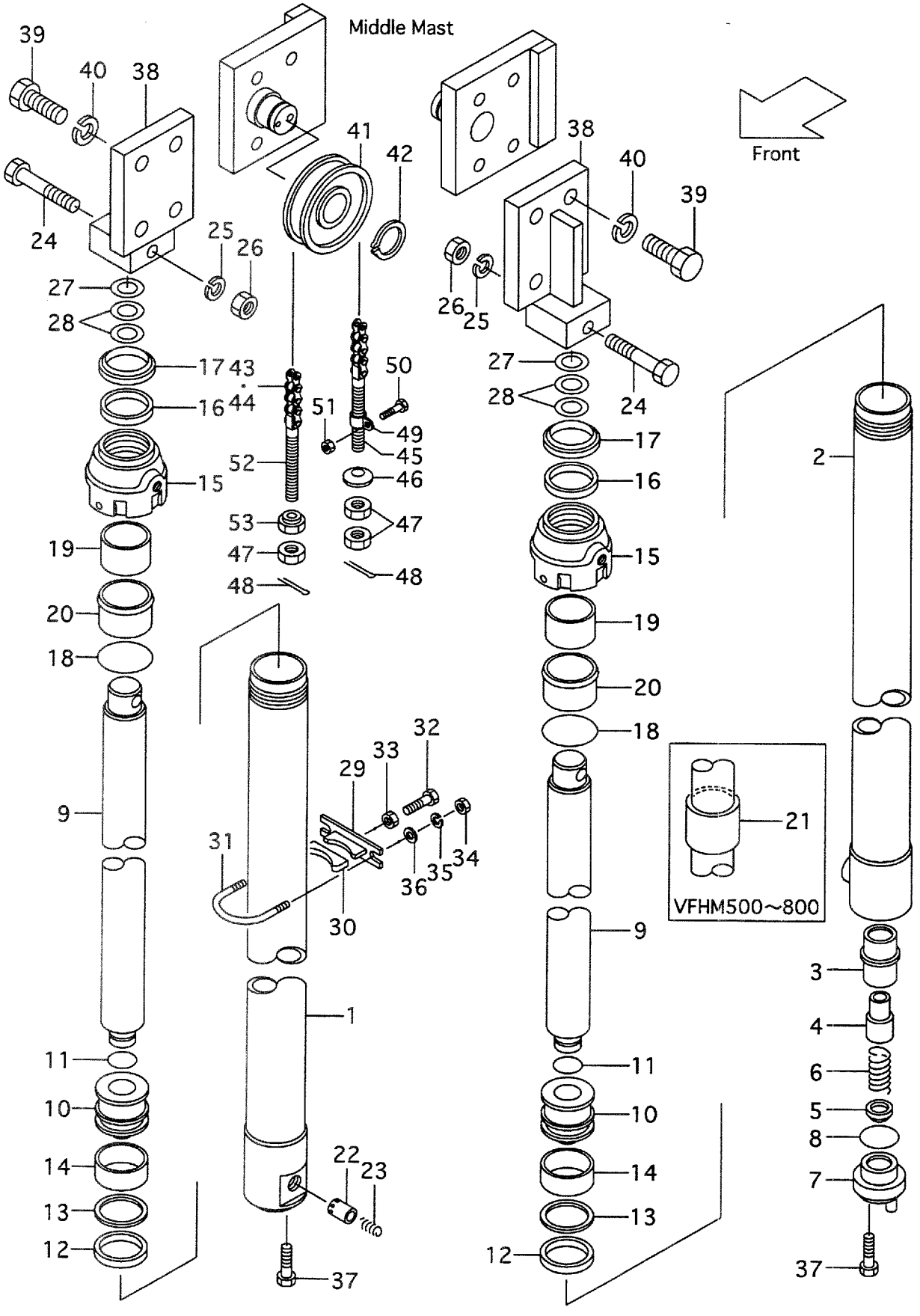

A:VFHM24T(FD35,FG35)
B:VFHM24T(FD40,FG40)

FIG.210
(M4040840)

Item No	Part No.	Mark	Description	Req'd	Remarks : Serial No.
-	224T0-81402		TUBE,RH VFHM435 ﾁｭｰﾌﾞ	1	
-	224T0-81432		TUBE,RH VFHM480 ﾁｭｰﾌﾞ	1	
-	224T0-81442		TUBE,RH VFHM500 ﾁｭｰﾌﾞ	1	
-	224T0-81452		TUBE,RH VFHM540 ﾁｭｰﾌﾞ	1	
-	224T0-81462		TUBE,RH VFHM550 ﾁｭｰﾌﾞ	1	
-	224T0-81472		TUBE,RH VFHM600 ﾁｭｰﾌﾞ	1	
-	224T0-81482		TUBE,RH VFHM650 ﾁｭｰﾌﾞ	1	
-	224T0-81492		TUBE,RH VFHM700 ﾁｭｰﾌﾞ	1	
-	224T0-81502		TUBE,RH VFHM750 ﾁｭｰﾌﾞ	1	
-	224T0-81512		TUBE,RH VFHM800 ﾁｭｰﾌﾞ	1	
2	224T0-81612		TUBE,LH VFHM360 ﾁｭｰﾌﾞ	1	
-	224T0-81622		TUBE,LH VFHM400 ﾁｭｰﾌﾞ	1	
-	224T0-81602		TUBE,LH VFHM435 ﾁｭｰﾌﾞ	1	
-	224T0-81632		TUBE,LH VFHM480 ﾁｭｰﾌﾞ	1	
-	224T0-81642		TUBE,LH VFHM500 ﾁｭｰﾌﾞ	1	
-	224T0-81652		TUBE,LH VFHM540 ﾁｭｰﾌﾞ	1	
-	224T0-81662		TUBE,LH VFHM550 ﾁｭｰﾌﾞ	1	
-	224T0-81672		TUBE,LH VFHM600 ﾁｭｰﾌﾞ	1	
-	224T0-81682		TUBE,LH VFHM650 ﾁｭｰﾌﾞ	1	
-	224T0-81692		TUBE,LH VFHM700 ﾁｭｰﾌﾞ	1	
-	224T0-81702		TUBE,LH VFHM750 ﾁｭｰﾌﾞ	1	
-	224T0-81712		TUBE,LH VFHM800 ﾁｭｰﾌﾞ	1	
3	53658-43021		SLEEVE ｽﾘｰﾌﾞ	1	(LH)
4	53658-43011		PISTON ﾋﾟｽﾄﾝ	1	(LH)
5	53658-43001		CHECK ﾁｪｯｸ	1	(LH)
6	53658-43031		SPRING ｽﾌﾟﾘﾝｸﾞ	1	(LH)
7	54238-43051		PLUG ﾌﾟﾗｸﾞ	1	(LH)
8	03320-00340		O-RING Oﾘﾝｸﾞ	1	(LH)
A2	224T0-81811		ROD-ASSY,PISTON VFHM360 ﾋﾟｽﾄﾝﾛｯﾄﾞｱｯｾﾝ	2	INC.9-11
-	224T0-81821		ROD-ASSY,PISTON VFHM400 ﾋﾟｽﾄﾝﾛｯﾄﾞｱｯｾﾝ	2	INC.9-11
-	224T0-81801		ROD-ASSY,PISTON VFHM435 ﾋﾟｽﾄﾝﾛｯﾄﾞｱｯｾﾝ	2	INC.9-11
-	224T0-81831		ROD-ASSY,PISTON VFHM480 ﾋﾟｽﾄﾝﾛｯﾄﾞｱｯｾﾝ	2	INC.9-11
-	224T0-81841		ROD-ASSY,PISTON VFHM500 ﾋﾟｽﾄﾝﾛｯﾄﾞｱｯｾﾝ	2	INC.9-11
-	224T0-81851		ROD-ASSY,PISTON VFHM540 ﾋﾟｽﾄﾝﾛｯﾄﾞｱｯｾﾝ	2	INC.9-11
-	224T0-81861		ROD-ASSY,PISTON VFHM550 ﾋﾟｽﾄﾝﾛｯﾄﾞｱｯｾﾝ	2	INC.9-11
-	224T0-81871		ROD-ASSY,PISTON VFHM600 ﾋﾟｽﾄﾝﾛｯﾄﾞｱｯｾﾝ	2	INC.9-11
-	224T0-81881		ROD-ASSY,PISTON VFHM650 ﾋﾟｽﾄﾝﾛｯﾄﾞｱｯｾﾝ	2	INC.9-11
-	224T0-81891		ROD-ASSY,PISTON VFHM700 ﾋﾟｽﾄﾝﾛｯﾄﾞｱｯｾﾝ	2	INC.9-11
-	224T0-81901		ROD-ASSY,PISTON VFHM750 ﾋﾟｽﾄﾝﾛｯﾄﾞｱｯｾﾝ	2	INC.9-11

FIG.210 LIFT CYLINDER (REAR)[VFHM24T]

(M4040840) リフトシリンダ

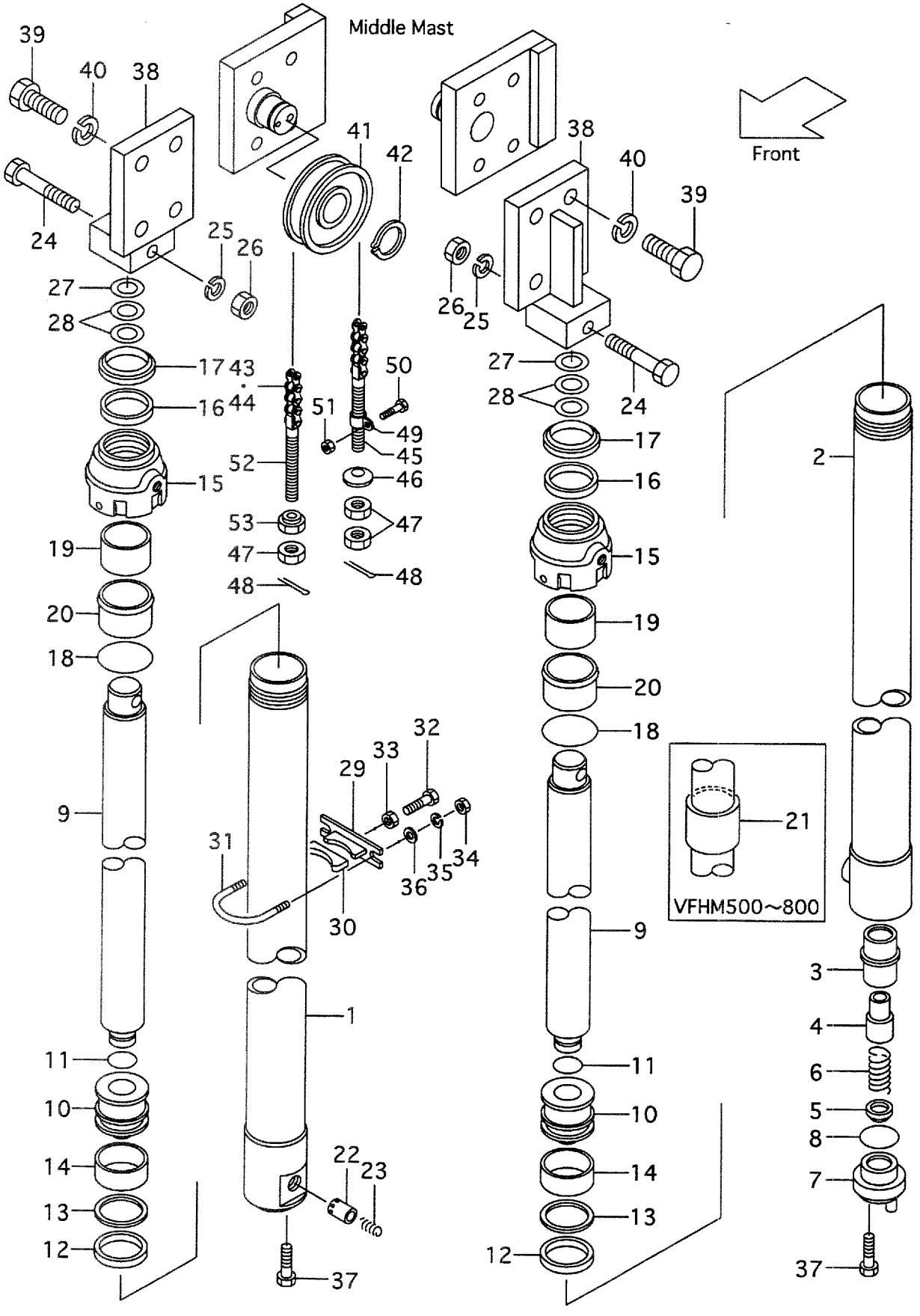

A : VFHM24T (FD35, FG35)
B : VFHM24T (FD40, FG40)

Item No	Part No.	Mark	Description		Req'd	Remarks : Serial No.
-	224T0-81911		ROD-ASSY,PISTON VFHM800		2	INC.9-11
				ﾋﾟｽﾄﾝﾛｯﾄﾞｱｯｾﾝ		
9	NO PART NO.	#	ROD,PISTON	ﾛｯﾄﾞ	2	
10	224T8-42501		PISTON	ﾋﾟｽﾄﾝ	2	
11	224T8-42512		RING,SNAP	ｽﾅｯﾌﾟﾘﾝｸﾞ	2	
12	224T8-42521	*	PACKING	ﾊﾟｯｷﾝｸﾞ	2	
13	224T8-42541	*	RING,BACK-UP	ﾘﾝｸﾞ	2	
14	224T8-42531	*	WEARING	ｳｴｱﾘﾝｸﾞ	2	
15	224T8-42402	#	CAP	ｷｬｯﾌﾟ	2	
16	224T8-46011	*	PACKING	ﾊﾟｯｷﾝｸﾞ	2	
17	224T8-46001	*	SEAL,DUST	ｼｰﾙ	2	
18	03340-00100	*	O-RING	Oﾘﾝｸﾞ	2	
19	23460-53171		BUSHING	ﾌﾞｯｼﾝｸﾞ	2	
20	224T8-42412		SLEEVE	ｽﾘｰﾌﾞ	2	
21	224T8-42471		SPACER VFHM500	ｽﾍﾟｰｻ	2	
-	224T0-83301		SPACER VFHM540	ｽﾍﾟｰｻ	2	
-	224T0-83311		SPACER VFHM550	ｽﾍﾟｰｻ	2	
-	224T0-83321		SPACER VFHM600	ｽﾍﾟｰｻ	2	
-	224T0-83331		SPACER VFHM650	ｽﾍﾟｰｻ	2	
-	224T0-83341		SPACER VFHM700	ｽﾍﾟｰｻ	2	
-	224T0-83351		SPACER VFHM750	ｽﾍﾟｰｻ	2	
-	224T0-83361		SPACER VFHM800	ｽﾍﾟｰｻ	2	
22	224T8-42801		PISTON	ﾋﾟｽﾄﾝ	1	(RH)
23	25908-44281		SPRING	ｽﾌﾟﾘﾝｸﾞ	1	(RH)
24	01100-12090		BOLT	ﾎﾞﾙﾄ	2	
25	02010-00012		WASHER	ﾜｯｼｬ	2	
26	01400-00012		NUT	ﾅｯﾄ	2	
27	23917-42191		SHIM	ｼﾑ	2	
28	23679-43831		SHIM	ｼﾑ	4	
29	224T8-42711		SUPPORT	ｻﾎﾟｰﾄ	2	
30	214A8-42631		RUBBER	ﾗﾊﾞｰ	2	
31	224T8-42701		U-BOLT	Uﾎﾞﾙﾄ	2	
32	01120-16045		BOLT	ﾎﾞﾙﾄ	2	
33	01402-00016		NUT	ﾅｯﾄ	2	
34	01400-00010		NUT	ﾅｯﾄ	4	
35	02010-00010		WASHER	ﾜｯｼｬ	4	
36	02000-00010		WASHER	ﾜｯｼｬ	4	
37	214A0-82831		BOLT	ﾎﾞﾙﾄ	2	
38	224T0-73301		HEAD,PISTON	ﾍｯﾄﾞ	2	
39	01103-22060		BOLT	ﾎﾞﾙﾄ	8	
40	02011-00022		WASHER	ﾜｯｼｬ	8	
41	24609-41241		SHEAVE	ｼｰﾌﾞ	2	
42	02100-00050		RING,SNAP	ｽﾅｯﾌﾟﾘﾝｸﾞ	2	
43	23918-45791		CHAIN VFHM360	ﾁｪｰﾝ	2	INC.44
-	23918-45891		CHAIN VFHM400	ﾁｪｰﾝ	2	INC.44
-	23918-45991		CHAIN VFHM435	ﾁｪｰﾝ	2	INC.44
-	23918-46111		CHAIN VFHM480	ﾁｪｰﾝ	2	INC.44
-	23918-46191		CHAIN VFHM500	ﾁｪｰﾝ	2	INC.44
-	23918-46291		CHAIN VFHM540	ﾁｪｰﾝ	2	INC.44
-	23918-46311		CHAIN VFHM550	ﾁｪｰﾝ	2	INC.44

FIG.210 LIFT CYLINDER (REAR)[VFHM24T]

(M4040840) リフトシリンダ

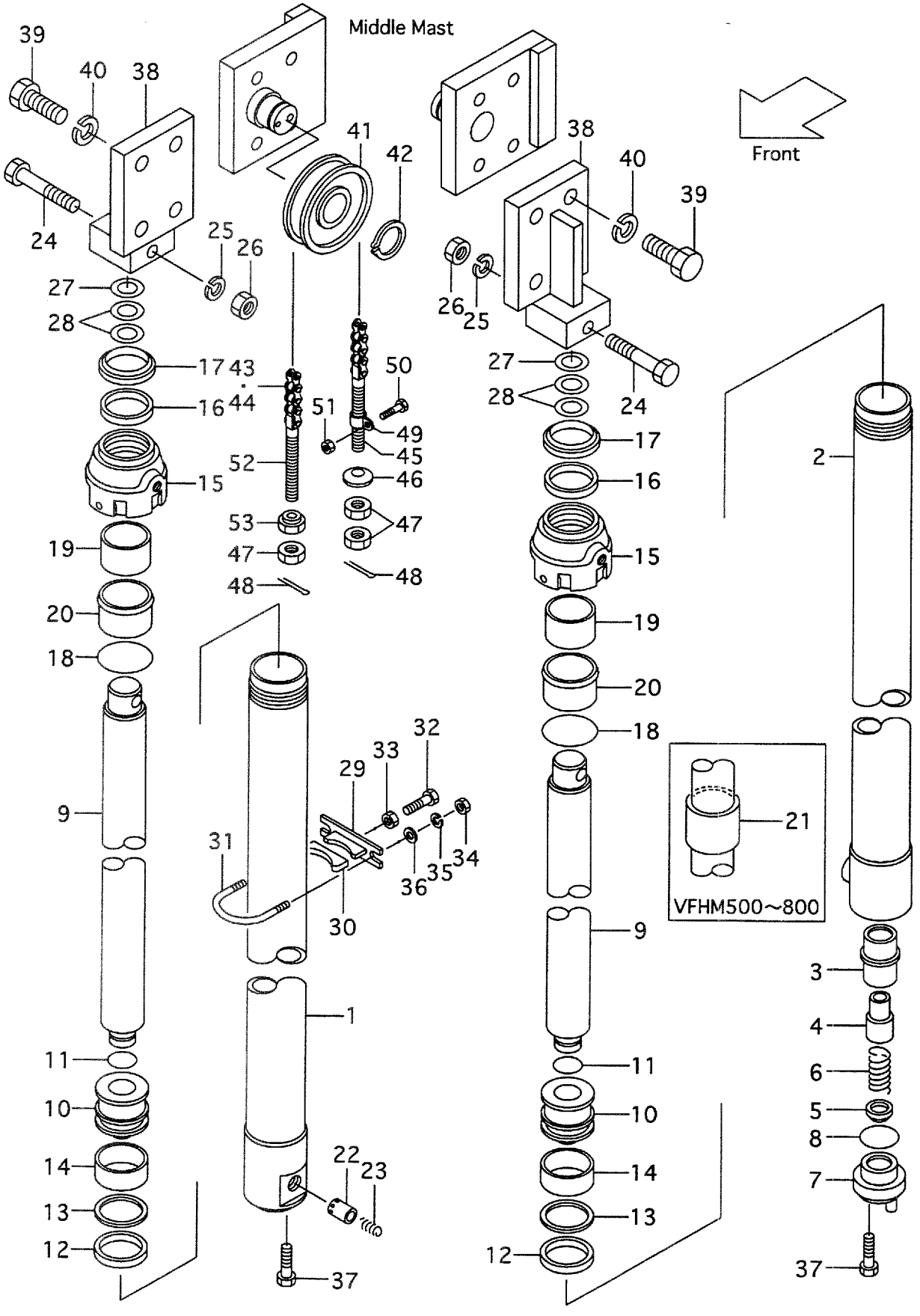

A:VFHM24T(FD35,FG35)
B:VFHM24T(FD40,FG40)

Item No	Part No.	Mark	Description		Req'd	Remarks : Serial No.
-	23918-46051		CHAIN VFHM600	ﾁｪｰﾝ	2	INC.44
-	23918-46131		CHAIN VFHM650	ﾁｪｰﾝ	2	INC.44
-	23918-46191		CHAIN VFHM700	ﾁｪｰﾝ	2	INC.44
-	23918-46271		CHAIN VFHM750	ﾁｪｰﾝ	2	INC.44
-	23918-46351		CHAIN VFHM800	ﾁｪｰﾝ	2	INC.44
44	23958-42921		LINK	ﾘﾝｸ	2	
45	24329-45441		PIN,ANCHOR	ﾋﾟﾝ	2	
46	24319-45751		CONE	ｺｰﾝ	2	
47	01402-00022		NUT	ﾅｯﾄ	6	
48	02200-03040		PIN,COTTER	ﾋﾟﾝ	4	
49	224T8-42621		CLIP	ｸﾘｯﾌﾟ	2	
50	01183-06016		BOLT & WASHER	ﾎﾞﾙﾄ&ﾜｯｼｬ	2	
51	01400-00006		NUT	ﾅｯﾄ	2	
52	23918-42681		PIN,ANCHOR	ﾋﾟﾝ	2	
53	23818-30271		NUT	ﾅｯﾄ	2	
K1	224T8-49803		KIT,OVERHAUL	ｵｰﾊﾞｰﾎｰﾙｷｯﾄ	2	INC.12-14,16-18

FIG.211 MAST PIPING [VFHM24T]

(M4040870) マストパイピング

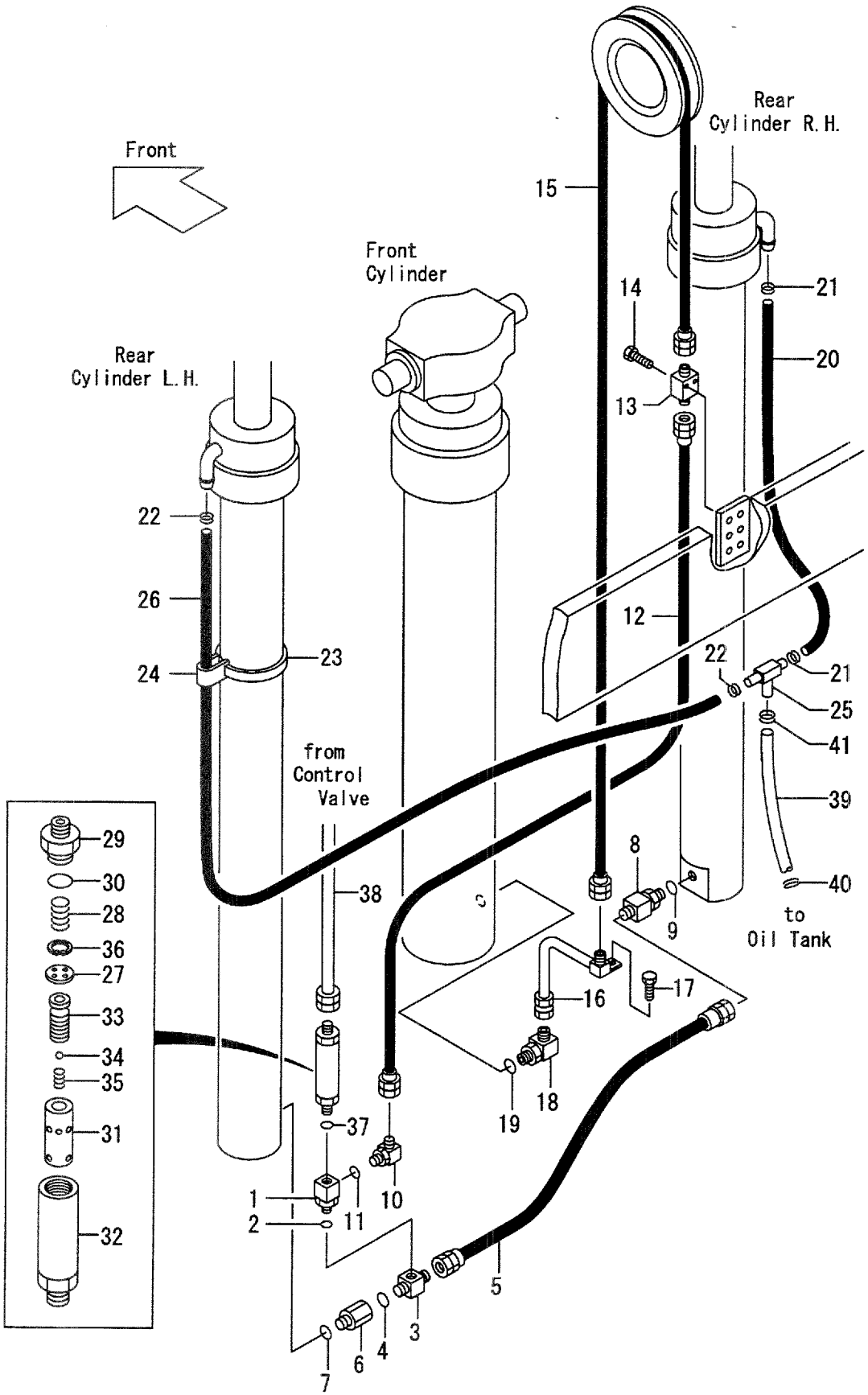

A:VFHM24T(FD35,FG35)
B:VFHM24T(FD40,FG40)

FIG.211
(M4040870)

Item No	Part No.	Mark	Description		Req'd	Remarks : Serial No.
A1	224T0-91001		THREE-WAY-ASSY	ｽﾘｰｳｪｲｱｯｾﾝ	1	INC.1,2
1	NO PART NO.	#	THREE-WAY	ｽﾘｰｳｴｲ	1	
2	03320-00240		O-RING	Oﾘﾝｸﾞ	1	
A2	24609-43682		THREE-WAY-ASSY	ｽﾘｰｳｪｲｱｯｾﾝ	1	INC.3,4
3	NO PART NO.	#	THREE-WAY	ｽﾘｰｳｴｲ	1	
4	03320-00180		O-RING	Oﾘﾝｸﾞ	1	
5	224T8-42861		HOSE	ﾎｰｽ	1	
A3	224T0-91011		NIPPLE-ASSY	ﾆｯﾌﾟﾙｱｯｾﾝ	1	INC.6,7
6	NO PART NO.	#	NIPPLE	ﾆｯﾌﾟﾙ	1	
7	03320-00180	*	O-RING	Oﾘﾝｸﾞ	1	
A4	224T8-44001		NIPPLE-ASSY	ﾆｯﾌﾟﾙｱｯｾﾝ	1	INC.8,9
8	NO PART NO.	#	NIPPLE	ﾆｯﾌﾟﾙ	1	
9	03320-00240	*	O-RING	Oﾘﾝｸﾞ	1	
10	24310-92571		ELBOW	ｴﾙﾎﾞ	1	
11	03320-00240		O-RING	Oﾘﾝｸﾞ	1	
12	224T8-02101		HOSE	ﾎｰｽ	1	
13	224T0-92231		NIPPLE	ﾆｯﾌﾟﾙ	1	
14	01184-10060		BOLT	ﾎﾞﾙﾄ	1	
15	224T0-93111		HOSE VFHM360	ﾎｰｽ	1	
-	224T0-93121		HOSE VFHM400	ﾎｰｽ	1	
-	224T0-93131		HOSE VFHM435	ﾎｰｽ	1	
-	224T0-93141		HOSE VFHM480	ﾎｰｽ	1	
-	224T0-93151		HOSE VFHM500	ﾎｰｽ	1	
-	224T0-93161		HOSE VFHM540	ﾎｰｽ	1	
-	224T0-93171		HOSE VFHM550	ﾎｰｽ	1	
-	224T0-93181		HOSE VFHM600	ﾎｰｽ	1	
-	224T0-93191		HOSE VFHM650	ﾎｰｽ	1	
-	224T0-93201		HOSE VFHM700	ﾎｰｽ	1	
-	224T0-93211		HOSE VFHM750	ﾎｰｽ	1	
-	224T0-93221		HOSE VFHM800	ﾎｰｽ	1	
16	224T0-92301		PIPE	ﾊﾟｲﾌﾟ	1	
17	01186-10016		BOLT	ﾎﾞﾙﾄ	1	
18	24310-92571		ELBOW	ｴﾙﾎﾞ	1	
19	03320-00240		O-RING	Oﾘﾝｸﾞ	1	
20	24328-40070		HOSE VFHM360	ﾎｰｽ	1	
-	24328-40080		HOSE VFHM400	ﾎｰｽ	1	
-	24328-40095		HOSE VFHM435	ﾎｰｽ	1	
-	24328-40110		HOSE VFHM480	ﾎｰｽ	1	
-	24328-40120		HOSE VFHM500	ﾎｰｽ	1	
-	24328-40130		HOSE VFHM540	ﾎｰｽ	1	
-	24328-40135		HOSE VFHM550	ﾎｰｽ	1	
-	24328-40155		HOSE VFHM600	ﾎｰｽ	1	
-	24328-40175		HOSE VFHM650	ﾎｰｽ	1	
-	24328-40190		HOSE VFHM700	ﾎｰｽ	1	
-	24328-40215		HOSE VFHM750	ﾎｰｽ	1	
-	24328-40230		HOSE VFHM800	ﾎｰｽ	1	
21	04911-00022		CLIP	ｸﾘｯﾌﾟ	2	
22	24329-46201		CLIP	ｸﾘｯﾌﾟ	2	
23	23678-42411		BAND	ﾊﾞﾝﾄﾞ	4	
24	53675-54101		BAND	ﾊﾞﾝﾄﾞ	4	

FIG.211 MAST PIPING [VFHM24T]

(M4040870) マストパイピング

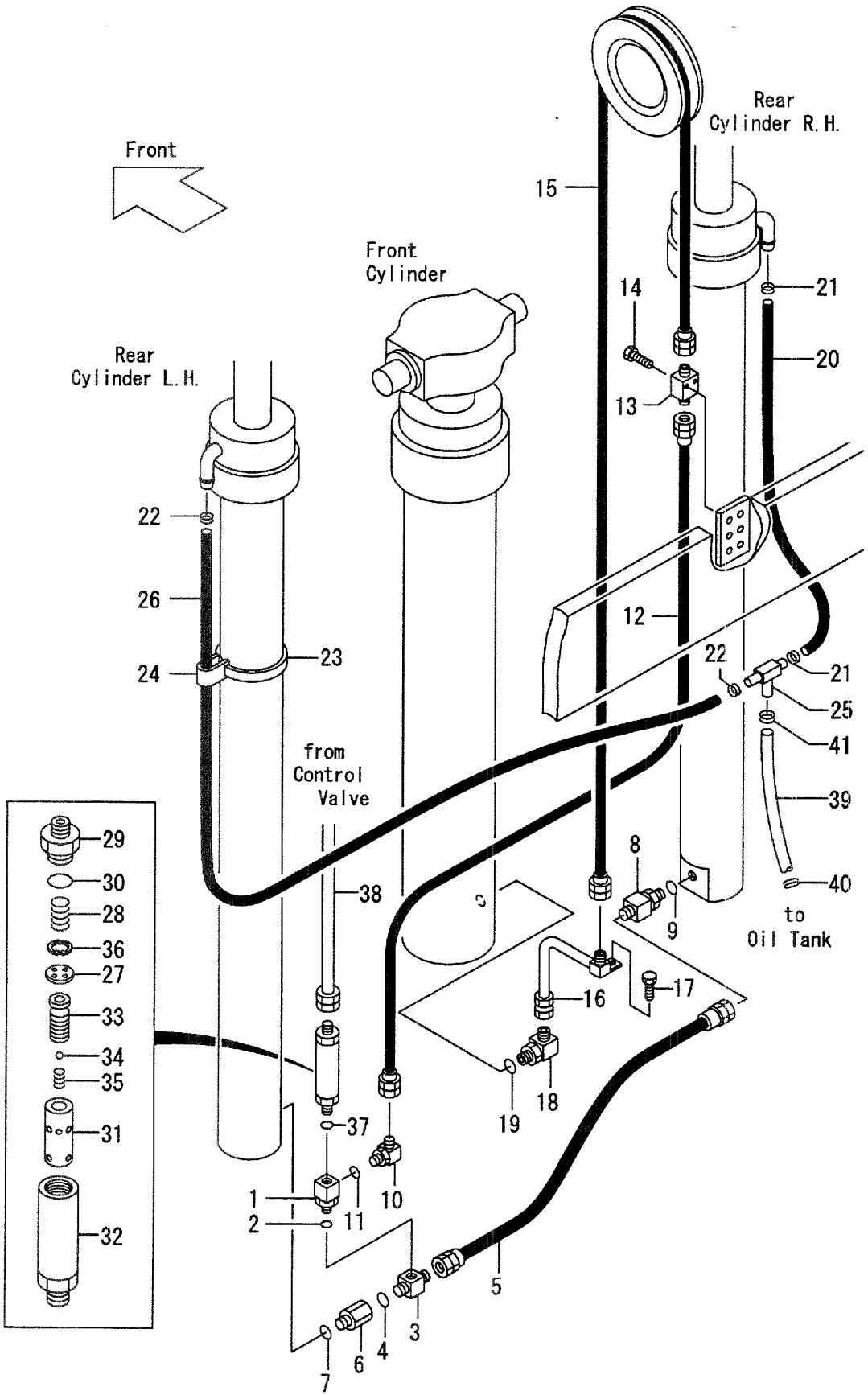

A:VFHM24T(FD35,FG35)
B:VFHM24T(FD40,FG40)

FIG.211
(M4040870)

Item No	Part No.	Mark	Description		Req'd	Remarks : Serial No.
25	24329-46052		THREE-WAY	ｽﾘｰｳｴｲ	1	
26	24328-40120		HOSE VFHM360	ﾎｰｽ	1	
-	24328-40130		HOSE VFHM400	ﾎｰｽ	1	
-	24328-40145		HOSE VFHM435	ﾎｰｽ	1	
-	24328-40160		HOSE VFHM480	ﾎｰｽ	1	
-	24328-40170		HOSE VFHM500	ﾎｰｽ	1	
-	24328-40180		HOSE VFHM540	ﾎｰｽ	1	
-	24328-40185		HOSE VFHM550	ﾎｰｽ	1	
-	24328-40205		HOSE VFHM600	ﾎｰｽ	1	
-	24328-40225		HOSE VFHM650	ﾎｰｽ	1	
-	24328-40240		HOSE VFHM700	ﾎｰｽ	1	
-	24328-40265		HOSE VFHM750	ﾎｰｽ	1	
-	24328-40280		HOSE VFHM800	ﾎｰｽ	1	
A5	224T8-41002		REGULATOR-ASSY,FLOW	ﾚｷﾞｭﾚｰﾀｱｯｾﾝ	1	INC.27-36
27	NO PART NO.	#	PLATE	ﾌﾟﾚｰﾄ	1	
28	24609-43631		SPRING	ｽﾌﾟﾘﾝｸﾞ	1	
29	NO PART NO.	#	NIPPLE	ﾆｯﾌﾟﾙ	1	
30	03300-00360		O-RING	Oﾘﾝｸﾞ	1	(OLD PART)
-	03320-00360		O-RING	Oﾘﾝｸﾞ	1	(NEW PART)
31	NO PART NO.	#	SLEEVE	ｽﾘｰﾌﾞ	1	
32	NO PART NO.	#	CASE	ｹｰｽ	1	
33	NO PART NO.	#	PISTON	ﾋﾟｽﾄﾝ	1	
34	24459-42951		BALL	ﾎﾞｰﾙ	1	
35	214A8-44151		SPRING	ｽﾌﾟﾘﾝｸﾞ	1	
36	02110-00020		RING,SNAP	ｽﾅｯﾌﾟﾘﾝｸﾞ	1	
37	03320-00240		O-RING	Oﾘﾝｸﾞ	1	
38	224T8-02111		HOSE	ﾎｰｽ	1	
39	04710-06113		HOSE	ﾎｰｽ	1	
40	04911-00032		CLIP	ｸﾘｯﾌﾟ	1	
41	24329-46211		CLIP	ｸﾘｯﾌﾟ	1	

FIG.212 FORK & LIFT BRACKET [VFHM28C]

(M4040920) フォーク&リフトブラケット

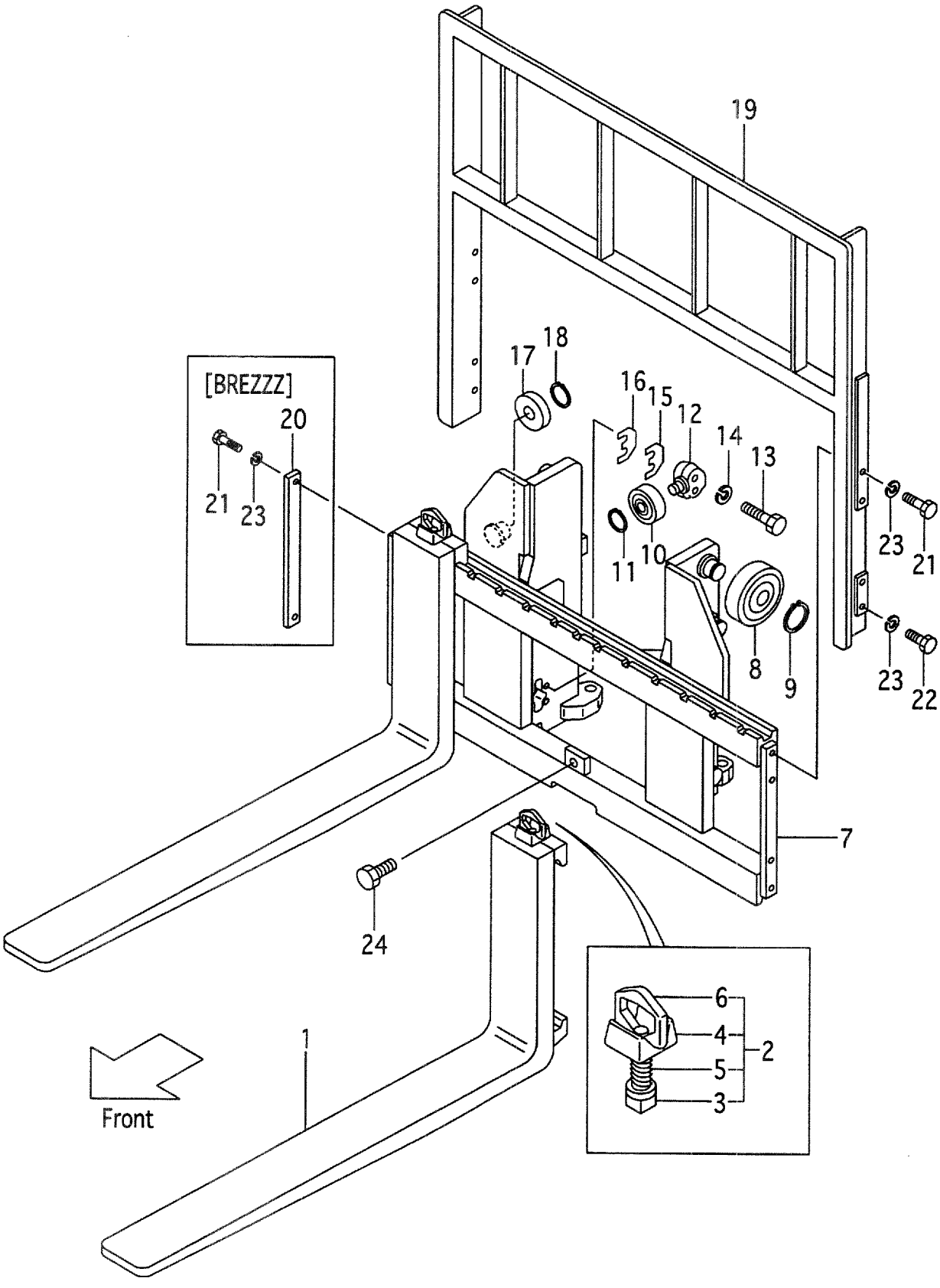

A:VFHM28C(FD45,FG45)

Item No	Part No.	Mark	Description		Req'd	Remarks : Serial No.
1	228A8-10613		FORK	ﾌｫｰｸ	2	MAST NO.1-209 (L=1070) INC.3-6
-	228A8-10614		FORK	ﾌｫｰｸ	2	MAST NO.210- (L=1070) INC.3-6
-	228A8-10603		FORK	ﾌｫｰｸ	2	MAST NO.1-209 [LF100] INC.3-6
-	228A8-10604		FORK	ﾌｫｰｸ	2	MAST NO.210- [LF100] INC.3-6
-	228A8-10613		FORK	ﾌｫｰｸ	2	MAST NO.1-209 [LF107] INC.3-6
-	228A8-10614		FORK	ﾌｫｰｸ	2	MAST NO.210- [LF107] INC.3-6
-	228A8-10623		FORK	ﾌｫｰｸ	2	MAST NO.1-209 [LF110] INC.3-6
-	228A8-10624		FORK	ﾌｫｰｸ	2	MAST NO.210- [LF110] INC.3-6
-	228A8-10633		FORK	ﾌｫｰｸ	2	MAST NO.1-209 [LF120] INC.3-6
-	228A8-10634		FORK	ﾌｫｰｸ	2	MAST NO.210- [LF120] INC.3-6
-	228A8-10643		FORK	ﾌｫｰｸ	2	MAST NO.1-209 [LF122] INC.3-6
-	228A8-10644		FORK	ﾌｫｰｸ	2	MAST NO.210- [LF122] INC.3-6
-	228A8-10743		FORK	ﾌｫｰｸ	2	MAST NO.1-209 [LF130] INC.3-6
-	228A8-10744		FORK	ﾌｫｰｸ	2	MAST NO.210- [LF130] INC.3-6
-	228A8-10653		FORK	ﾌｫｰｸ	2	MAST NO.1-209 [LF137] INC.3-6
-	228A8-10654		FORK	ﾌｫｰｸ	2	MAST NO.210- [LF137] INC.3-6
-	228A8-10753		FORK	ﾌｫｰｸ	2	MAST NO.1-209 [LF140] INC.3-6
-	228A8-10754		FORK	ﾌｫｰｸ	2	MAST NO.210- [LF140] INC.3-6
-	228A8-10763		FORK	ﾌｫｰｸ	2	MAST NO.1-209 [LF150] INC.3-6
-	228A8-10764		FORK	ﾌｫｰｸ	2	MAST NO.210- [LF150] INC.3-6
-	228A8-10663		FORK	ﾌｫｰｸ	2	MAST NO.1-209 [LF152] INC.3-6
-	228A8-10664		FORK	ﾌｫｰｸ	2	MAST NO.210- [LF152] INC.3-6
-	228A8-10773		FORK	ﾌｫｰｸ	2	MAST NO.1-209 [LF160] INC.3-6
-	228A8-10774		FORK	ﾌｫｰｸ	2	MAST NO.210- [LF160] INC.3-6
-	228A8-10673		FORK	ﾌｫｰｸ	2	MAST NO.1-209 [LF167] INC.3-6

FIG.212 FORK & LIFT BRACKET [VFHM28C]

(M4040920) フォーク&リフトブラケット

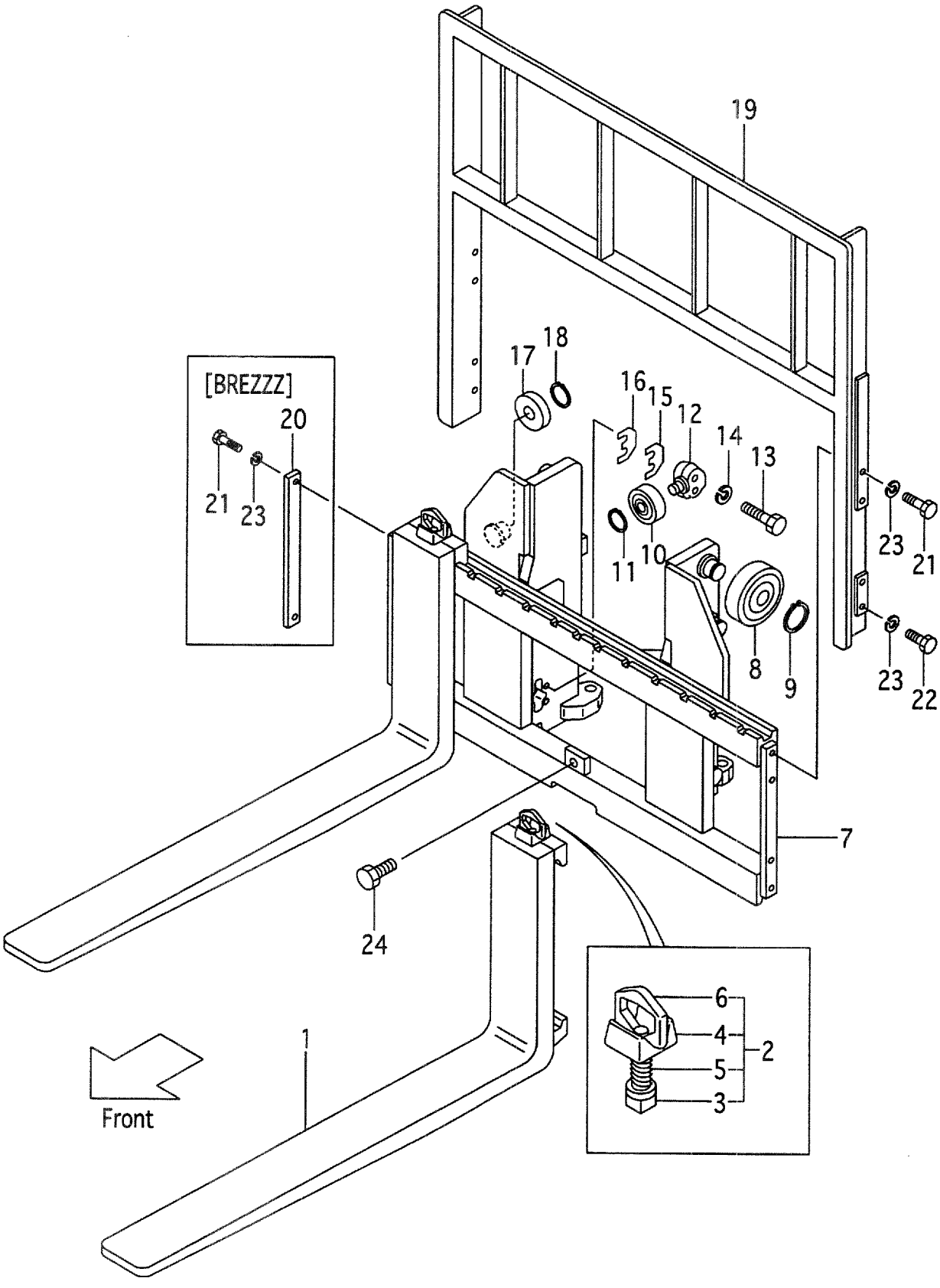

A:VFHM28C(FD45,FG45)

Item No	Part No.	Mark	Description		Req'd	Remarks : Serial No.
-	228A8-10674		FORK	ﾌｫｰｸ	2	MAST NO.210- [LF167] INC.3-6
-	228A8-10783		FORK	ﾌｫｰｸ	2	MAST NO.1-209 [LF170] INC.3-6
-	228A8-10784		FORK	ﾌｫｰｸ	2	MAST NO.210- [LF170] INC.3-6
-	228A8-10793		FORK	ﾌｫｰｸ	2	MAST NO.1-209 [LF180] INC.3-6
-	228A8-10794		FORK	ﾌｫｰｸ	2	MAST NO.210- [LF180] INC.3-6
-	228A8-10683		FORK	ﾌｫｰｸ	2	MAST NO.1-209 [LF182] INC.3-6
-	228A8-10684		FORK	ﾌｫｰｸ	2	MAST NO.210- [LF182] INC.3-6
-	228A8-10803		FORK	ﾌｫｰｸ	2	MAST NO.1-209 [LF190] INC.3-6
-	228A8-10804		FORK	ﾌｫｰｸ	2	MAST NO.210- [LF190] INC.3-6
-	228A8-10693		FORK	ﾌｫｰｸ	2	MAST NO.1-209 [LF197] INC.3-6
-	228A8-10694		FORK	ﾌｫｰｸ	2	MAST NO.210- [LF197] INC.3-6
-	228A8-10813		FORK	ﾌｫｰｸ	2	MAST NO.1-201 [LF200] INC.3-6
-	228A8-10814		FORK	ﾌｫｰｸ	2	MAST NO.202- [LF200] INC.3-6
-	228A8-10823		FORK	ﾌｫｰｸ	2	MAST NO.1-201 [LF210] INC.3-6
-	228A8-10824		FORK	ﾌｫｰｸ	2	MAST NO.202- [LF210] INC.3-6
-	228A8-10703		FORK	ﾌｫｰｸ	2	MAST NO.1-201 [LF212] INC.3-6
-	228A8-10704		FORK	ﾌｫｰｸ	2	MAST NO.202- [LF212] INC.3-6
-	228A8-10713		FORK	ﾌｫｰｸ	2	MAST NO.1-201 [LF220] INC.3-6
-	228A8-10714		FORK	ﾌｫｰｸ	2	MAST NO.202- [LF220] INC.3-6
-	228A8-10723		FORK	ﾌｫｰｸ	2	MAST NO.1-201 [LF227] INC.3-6
-	228A8-10724		FORK	ﾌｫｰｸ	2	MAST NO.202- [LF227] INC.3-6
-	228A8-10733		FORK	ﾌｫｰｸ	2	MAST NO.1-201 [LF230] INC.3-6
-	228A8-10734		FORK	ﾌｫｰｸ	2	MAST NO.202- [LF230] INC.3-6
2	214J8-11001		STOPPER,FORK	ｽﾄｯﾊﾟｱｯｾﾝ	2	MAST NO.1-305 INC.3-6
-	214J8-11002		STOPPER,FORK	ｽﾄｯﾊﾟ	2	MAST NO.306-
3	NO PART NO.	#	STOPPER	ｽﾄｯﾊﾟ	2	MAST NO.1-305

FIG.212 FORK & LIFT BRACKET [VFHM28C]

(M4040920) フォーク&リフトブラケット

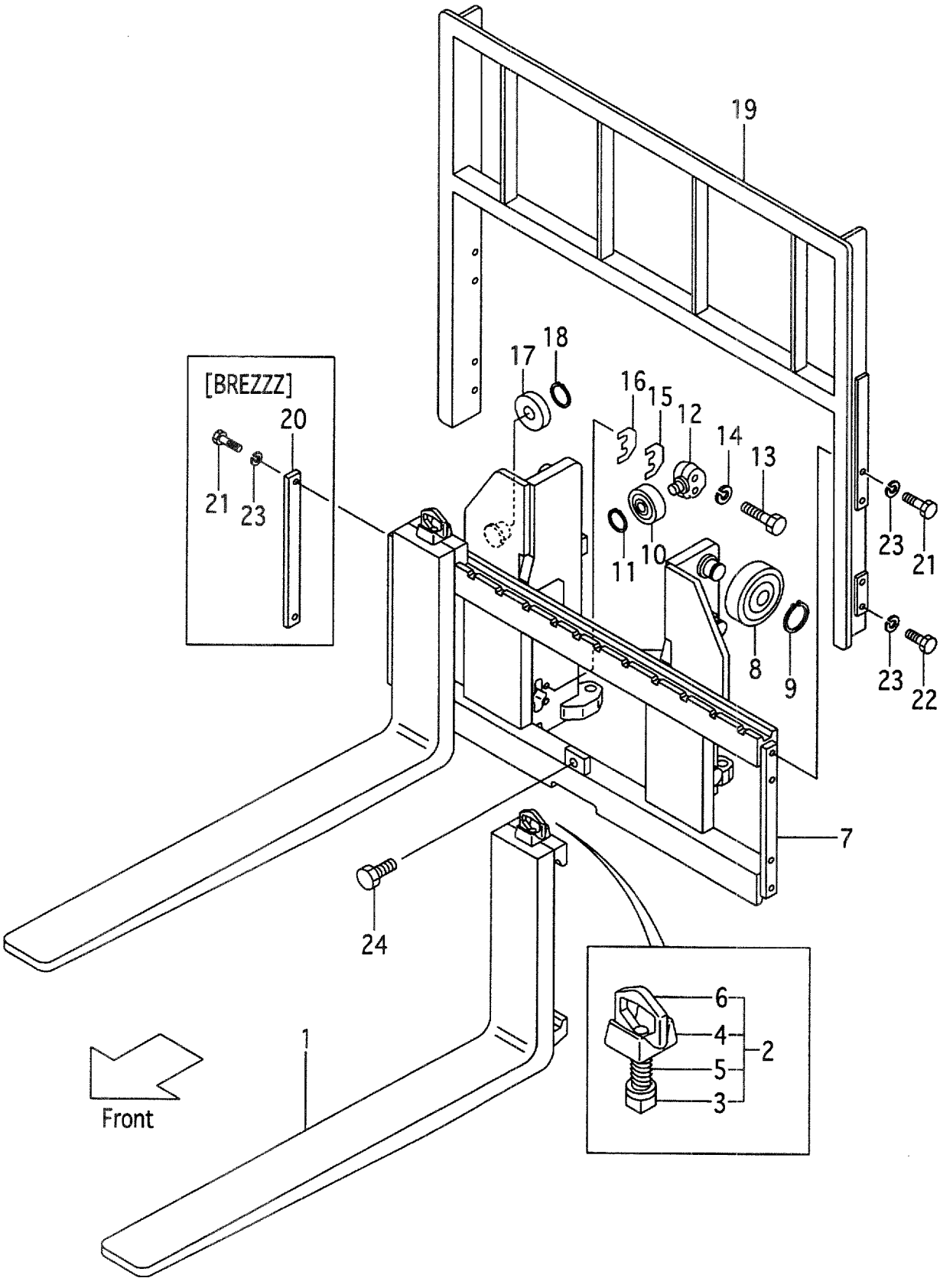

A:VFHM28C (FD45, FG45)

Item No	Part No.	Mark	Description		Req'd	Remarks : Serial No.
4	214J8-12001		HEAD	ﾍｯﾄﾞ	2	MAST NO.1-305
5	214J8-12031		SPRING	ｽﾌﾟﾘﾝｸﾞ	2	MAST NO.1-305
6	214A8-12021		HANDLE	ﾊﾝﾄﾞﾙ	2	MAST NO.1-305
7	228C0-90001		BRACKET,LIFT	ﾌﾞﾗｹｯﾄ	1	
-	228C0-91101		BRACKET,LIFT	ﾌﾞﾗｹｯﾄ	1	[LBR002]
-	528C1-62101		BRACKET,LIFT	ﾌﾞﾗｹｯﾄ	1	[WFY168][WFY183][WFY200]
-	528C1-62111		BRACKET,LIFT	ﾌﾞﾗｹｯﾄ	1	[WFY135][WFY138][WFY145] [WFY146][WFY154][WFY180]
-	528C1-62151		BRACKET,LIFT	ﾌﾞﾗｹｯﾄ	1	[LBR002/WFY168]
8	24609-42111		ROLLER,END	ﾛｰﾗ	6	
-	24609-42121		ROLLER,END	ﾛｰﾗ	(4)	(UPPER & LOWER)
9	02100-00045		RING,SNAP	ｽﾅｯﾌﾟﾘﾝｸﾞ	6	
10	22198-22341		ROLLER,END,91.5	ﾛｰﾗ	2	
11	02100-00030		RING,SNAP	ｽﾅｯﾌﾟﾘﾝｸﾞ	2	
12	24609-42131		SHAFT	ｼｬﾌﾄ	2	
13	01103-16065		BOLT	ﾎﾞﾙﾄ	4	
14	02011-00016		WASHER	ﾜｯｼｬ	4	
15	24609-42151		SHIM,T-1.0	ｼﾑ	8	
16	24609-42161		SHIM,T-0.2	ｼﾑ	4	
17	22198-22341		ROLLER,END,91.5	ﾛｰﾗ	2	
-	22198-22341		ROLLER,END,91.5	ﾛｰﾗ	2	[WFY168][WFY183][WFY200]
-	22198-22341		ROLLER,END,91.5	ﾛｰﾗ	4	[LBR002][LBR002/WFY168]
-	22198-22341		ROLLER,END,91.5	ﾛｰﾗ	4	[WFY135][WFY138][WFY145] [WFY146][WFY154][WFY180]
-	24258-33401		ROLLER,END,92.0	ﾛｰﾗ	(2)	
-	24258-33401		ROLLER,END,92.0	ﾛｰﾗ	(2)	[WFY168][WFY183][WFY200]
-	24258-33401		ROLLER,END,92.0	ﾛｰﾗ	(4)	[LBR002][LBR002/WFY168]
-	24258-33401		ROLLER,END,92.0	ﾛｰﾗ	(4)	[WFY135][WFY138][WFY145] [WFY146][WFY154][WFY180]
18	02100-00030		RING,SNAP	ｽﾅｯﾌﾟﾘﾝｸﾞ	2	
-	02100-00030		RING,SNAP	ｽﾅｯﾌﾟﾘﾝｸﾞ	2	[WFY168][WFY183][WFY200]
-	02100-00030		RING,SNAP	ｽﾅｯﾌﾟﾘﾝｸﾞ	4	[LBR002][LBR002/WFY168]
-	02100-00030		RING,SNAP	ｽﾅｯﾌﾟﾘﾝｸﾞ	4	[WFY135][WFY138][WFY145] [WFY146][WFY154][WFY180]
19	224T8-22301		BACKREST	ﾊﾞｯｸﾚｽﾄ	1	
-	524T2-74001		BACKREST	ﾊﾞｯｸﾚｽﾄ	1	[EXA][EXC]
-	524T1-64301		BACKREST	ﾊﾞｯｸﾚｽﾄ	1	[WFY168][WBR]
-	524T1-64311		BACKREST	ﾊﾞｯｸﾚｽﾄ	1	[WFY180][WWB]
-	224T8-22601		BACKREST	ﾊﾞｯｸﾚｽﾄ	1	[HBR130]
-	224T8-22611		BACKREST	ﾊﾞｯｸﾚｽﾄ	1	[HBR140]
-	224T8-22621		BACKREST	ﾊﾞｯｸﾚｽﾄ	1	[HBR150]
-	224T8-22631		BACKREST	ﾊﾞｯｸﾚｽﾄ	1	[HBR160]
20	24450-92021		PLATE	ﾌﾟﾚｰﾄ	2	[BREZZZ]
21	01100-14030		BOLT	ﾎﾞﾙﾄ	4	
22	01100-14025		BOLT	ﾎﾞﾙﾄ	4	
23	02010-00014		WASHER	ﾜｯｼｬ	8	
-	02010-00014		WASHER	ﾜｯｼｬ	4	[BREZZZ]
24	01184-12025		BOLT	ﾎﾞﾙﾄ	1	

FIG.213 MAST [VFHM28C]

(M4040720) マスト

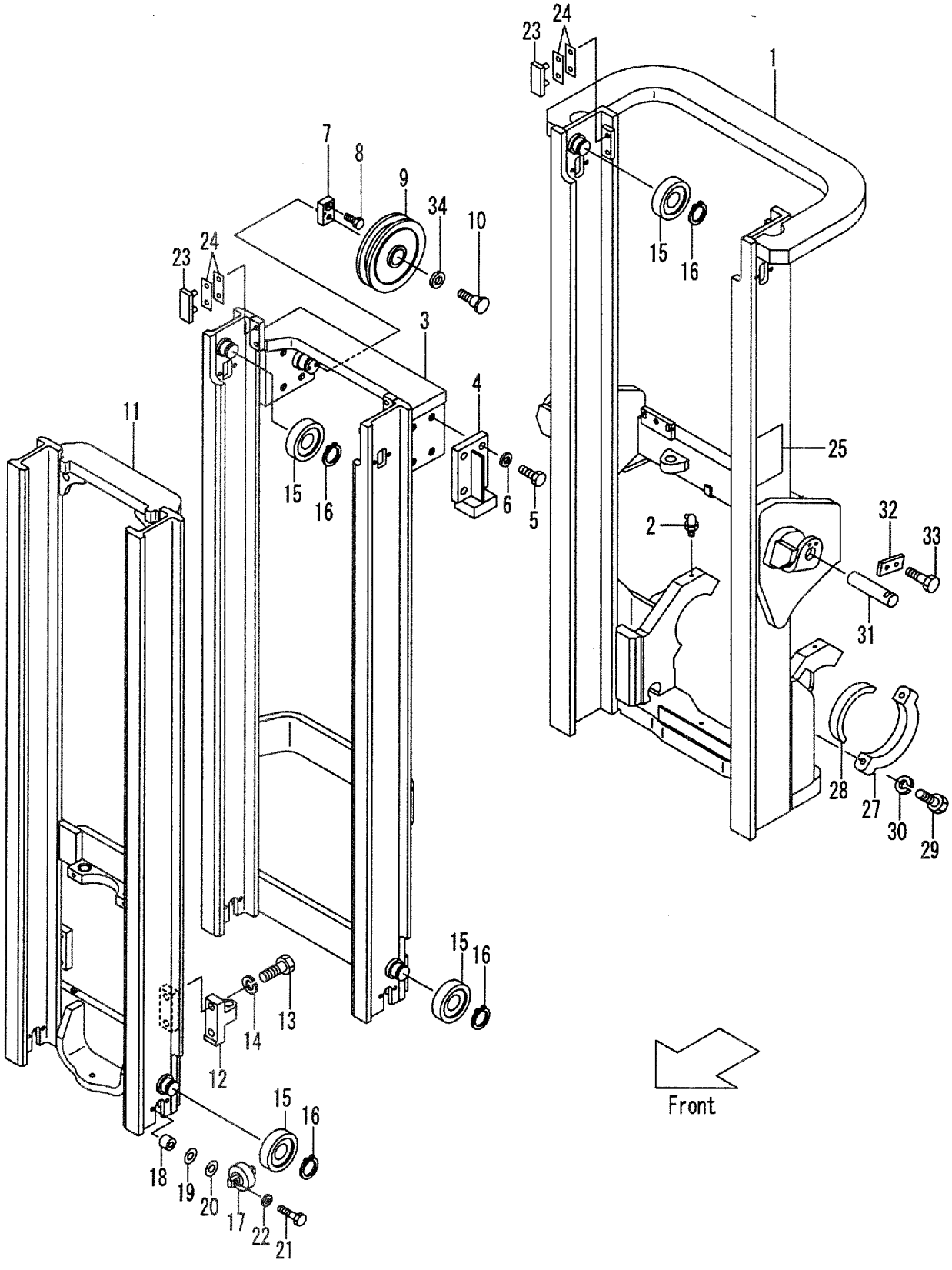

A:VFHM28C(FD45,FG45)

Item No	Part No.	Mark	Description	Req'd	Remarks : Serial No.
1	228C0-70011		MAST,OUTER VFHM360 アウタマスト	1	
-	228C0-70021		MAST,OUTER VFHM400 アウタマスト	1	
-	228C0-70001		MAST,OUTER VFHM435 アウタマスト	1	
-	228C0-70031		MAST,OUTER VFHM480 アウタマスト	1	
-	228C0-70041		MAST,OUTER VFHM500 アウタマスト	1	
-	228C0-70051		MAST,OUTER VFHM540 アウタマスト	1	
-	228C0-70061		MAST,OUTER VFHM550 アウタマスト	1	
-	228C0-70071		MAST,OUTER VFHM600 アウタマスト	1	
-	228C0-70081		MAST,OUTER VFHM650 アウタマスト	1	
-	228C0-70091		MAST,OUTER VFHM700 アウタマスト	1	
-	228C0-70101		MAST,OUTER VFHM750 アウタマスト	1	
-	228C0-70111		MAST,OUTER VFHM800 アウタマスト	1	
-	528C3-86211		MAST,OUTER VFHM360 アウタマスト	1	[RW][HC][EXR]
-	528C3-86221		MAST,OUTER VFHM400 アウタマスト	1	[RW][HC][EXR]
-	528C3-86201		MAST,OUTER VFHM435 アウタマスト	1	[RW][HC][EXR]
-	528C3-86231		MAST,OUTER VFHM480 アウタマスト	1	[RW][HC][EXR]
-	528C3-86241		MAST,OUTER VFHM500 アウタマスト	1	[RW][HC][EXR]
-	528C3-86251		MAST,OUTER VFHM540 アウタマスト	1	[RW][HC][EXR]
-	528C3-86261		MAST,OUTER VFHM550 アウタマスト	1	[RW][HC][EXR]
-	528C3-86271		MAST,OUTER VFHM600 アウタマスト	1	[RW][HC][EXR]
-	528C3-86281		MAST,OUTER VFHM650 アウタマスト	1	[RW][HC][EXR]
-	528C3-86291		MAST,OUTER VFHM700 アウタマスト	1	[RW][HC][EXR]
-	528C3-86301		MAST,OUTER VFHM750 アウタマスト	1	[RW][HC][EXR]
-	528C3-86311		MAST,OUTER VFHM800 アウタマスト	1	[RW][HC][EXR]
2	04901-00160		FITTING フィッティング	2	
3	228C0-70211		MAST,MIDDLE VFHM360 ミドルマスト	1	
-	228C0-70221		MAST,MIDDLE VFHM400 ミドルマスト	1	
-	228C0-70201		MAST,MIDDLE VFHM435 ミドルマスト	1	
-	228C0-70231		MAST,MIDDLE VFHM480 ミドルマスト	1	
-	228C0-70241		MAST,MIDDLE VFHM500 ミドルマスト	1	
-	228C0-70251		MAST,MIDDLE VFHM540 ミドルマスト	1	
-	228C0-70261		MAST,MIDDLE VFHM550 ミドルマスト	1	
-	228C0-70271		MAST,MIDDLE VFHM600 ミドルマスト	1	
-	228C0-70281		MAST,MIDDLE VFHM650 ミドルマスト	1	
-	228C0-70291		MAST,MIDDLE VFHM700 ミドルマスト	1	
-	228C0-70301		MAST,MIDDLE VFHM750 ミドルマスト	1	
-	228C0-70311		MAST,MIDDLE VFHM800 ミドルマスト	1	
4	224T0-73301		HEAD,PISTON ヘッド	2	
5	01103-22060		BOLT ボルト	8	
6	02011-00022		WASHER ワッシャ	8	
7	224T0-73031		BRACKET ブラケット	1	
8	01183-12030		BOLT ボルト	1	
9	22430-92201		PULLEY プーリ	1	MAST NO.1-239
-	22430-92202		PULLEY プーリ	1	MAST NO.240-
10	22430-92211		BOLT ボルト	1	MAST NO.1-239
-	22430-92212		BOLT ボルト	1	MAST NO.240-
11	228C0-70411		MAST,INNER VFHM360 インナマスト	1	
-	228C0-70421		MAST,INNER VFHM400 インナマスト	1	
-	228C0-70401		MAST,INNER VFHM435 インナマスト	1	
-	228C0-70431		MAST,INNER VFHM480 インナマスト	1	

FIG.213 MAST [VFHM28C]

(M4040720) マスト

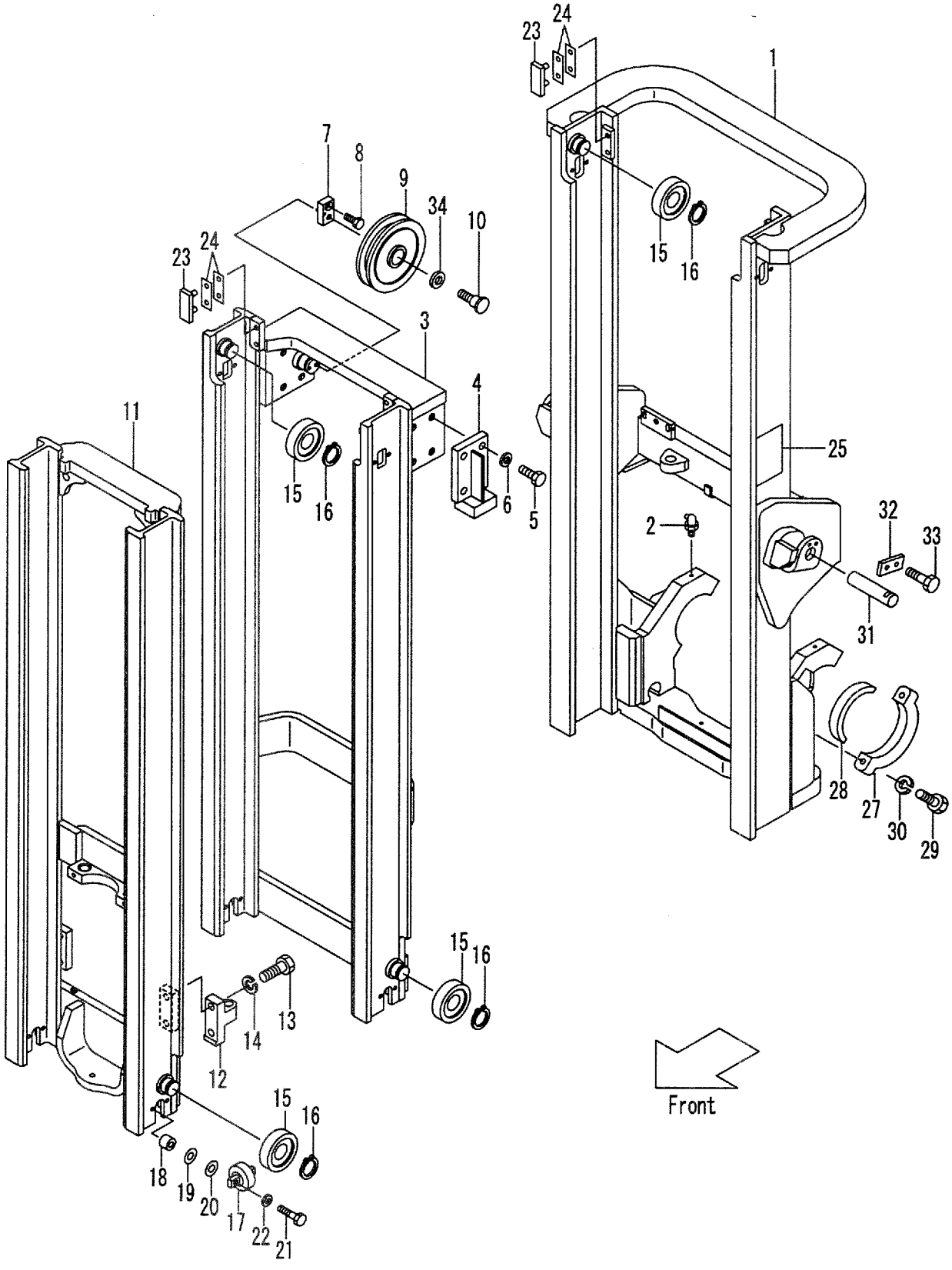

A:VFHM28C(FD45,FG45)

Item No	Part No.	Mark	Description		Req'd	Remarks : Serial No.
-	228C0-70441		MAST,INNER VFHM500	ｲﾝﾅﾏｽﾄ	1	
-	228C0-70451		MAST,INNER VFHM540	ｲﾝﾅﾏｽﾄ	1	
-	228C0-70461		MAST,INNER VFHM550	ｲﾝﾅﾏｽﾄ	1	
-	228C0-70471		MAST,INNER VFHM600	ｲﾝﾅﾏｽﾄ	1	
-	228C0-70481		MAST,INNER VFHM650	ｲﾝﾅﾏｽﾄ	1	
-	228C0-70491		MAST,INNER VFHM700	ｲﾝﾅﾏｽﾄ	1	
-	228C0-70501		MAST,INNER VFHM750	ｲﾝﾅﾏｽﾄ	1	
-	228C0-70511		MAST,INNER VFHM800	ｲﾝﾅﾏｽﾄ	1	
12	224T0-73121		BRACKET	ﾌﾞﾗｹｯﾄ	2	
13	01103-20055		BOLT	ﾎﾞﾙﾄ	4	
14	02011-00020		WASHER	ﾜｯｼｬ	4	
15	24609-42111		ROLLER,END,123.5	ﾛｰﾗ	8	
-	24609-42121		ROLLER,END,124.0	ﾛｰﾗ	(8)	
16	02100-00045		RING,SNAP	ｽﾅｯﾌﾟﾘﾝｸﾞ	8	
17	23458-32051		ROLLER,SIDE	ﾛｰﾗ	8	MAST NO.1-316
-	23458-32052		ROLLER,SIDE	ﾛｰﾗ	8	MAST NO.317-
18	23818-30071		SPACER	ｽﾍﾟｰｻ	16	
19	22548-34051		SHIM,T-0.5	ｼﾑ	16	
20	22548-34061		SHIM,T-1.0	ｼﾑ	32	
21	01100-12040		BOLT	ﾎﾞﾙﾄ	16	MAST NO.1-316
-	01184-12045		BOLT	ﾎﾞﾙﾄ	16	MAST NO.317-
22	02010-00012		WASHER	ﾜｯｼｬ	16	
23	22678-32001		SLIPPER,T-4	ｽﾘｯﾊﾟ	4	
-	23460-72501		SLIPPER,T-6	ｽﾘｯﾊﾟ	(4)	
24	22679-43231		SHIM,T-0.5	ｼﾑ	28	
25	23678-06002		PLATE,NAME	ﾌﾟﾚｰﾄ	1	
26	224W9-12021	+	DECAL	ﾃﾞｶﾙ	2	[HL/VFHM480-800] [BKH/VFHM480-800]
27	224T8-02201		CAP	ｷｬｯﾌﾟ	2	
28	224T8-02001		BUSHING	ﾌﾞｯｼﾝｸﾞ	2	
29	01103-20085		BOLT	ﾎﾞﾙﾄ	4	
30	02010-00020		WASHER	ﾜｯｼｬ	4	
31	224T8-52501		PIN	ﾋﾟﾝ	2	
32	23648-50161		PLATE	ﾌﾟﾚｰﾄ	2	
33	01184-10020		BOLT	ﾎﾞﾙﾄ	4	
34	02000-00020		WASHER	ﾜｯｼｬ	1	MAST NO.240-
35	228C0-93301	+	CHART,CAPACITY	ﾁｬｰﾄ	1	(VFHM360-500)
-	228C0-93311	+	CHART,CAPACITY	ﾁｬｰﾄ	1	(VFHM540-700)
-	514A3-82301	+	CHART,CAPACITY	ﾁｬｰﾄ	1	[EXB][EXC][EXE][EXN]
-	228C0-93321	+	CHART,CAPACITY	ﾁｬｰﾄ	1	[EXA/VFHM360-500]
-	228C0-93331	+	CHART,CAPACITY	ﾁｬｰﾄ	1	[EXA/VFHM540-700]
-	524T3-84031	+	CHART,CAPACITY	ﾁｬｰﾄ	1	(RUSSIAN)
-	514A3-82341	+	CHART,CAPACITY	ﾁｬｰﾄ	1	(FRENCH)
-	514A3-82331	+	CHART,CAPACITY	ﾁｬｰﾄ	1	(SPANISH)
-	514A3-82361	+	CHART,CAPACITY	ﾁｬｰﾄ	1	(DANISH)
-	514A3-82381	+	CHART,CAPACITY	ﾁｬｰﾄ	1	(GREEK)
-	514A3-82371	+	CHART,CAPACITY	ﾁｬｰﾄ	1	(ITALIAN)
-	514A3-82351	+	CHART,CAPACITY	ﾁｬｰﾄ	1	(DUTCH)
-	514A3-82391	+	CHART,CAPACITY	ﾁｬｰﾄ	1	(PORTUGUESE)
-	529F3-82101	+	CHART,CAPACITY	ﾁｬｰﾄ	1	(FINNISH)

FIG.213 MAST [VFHM28C]

(M4040720) マスト

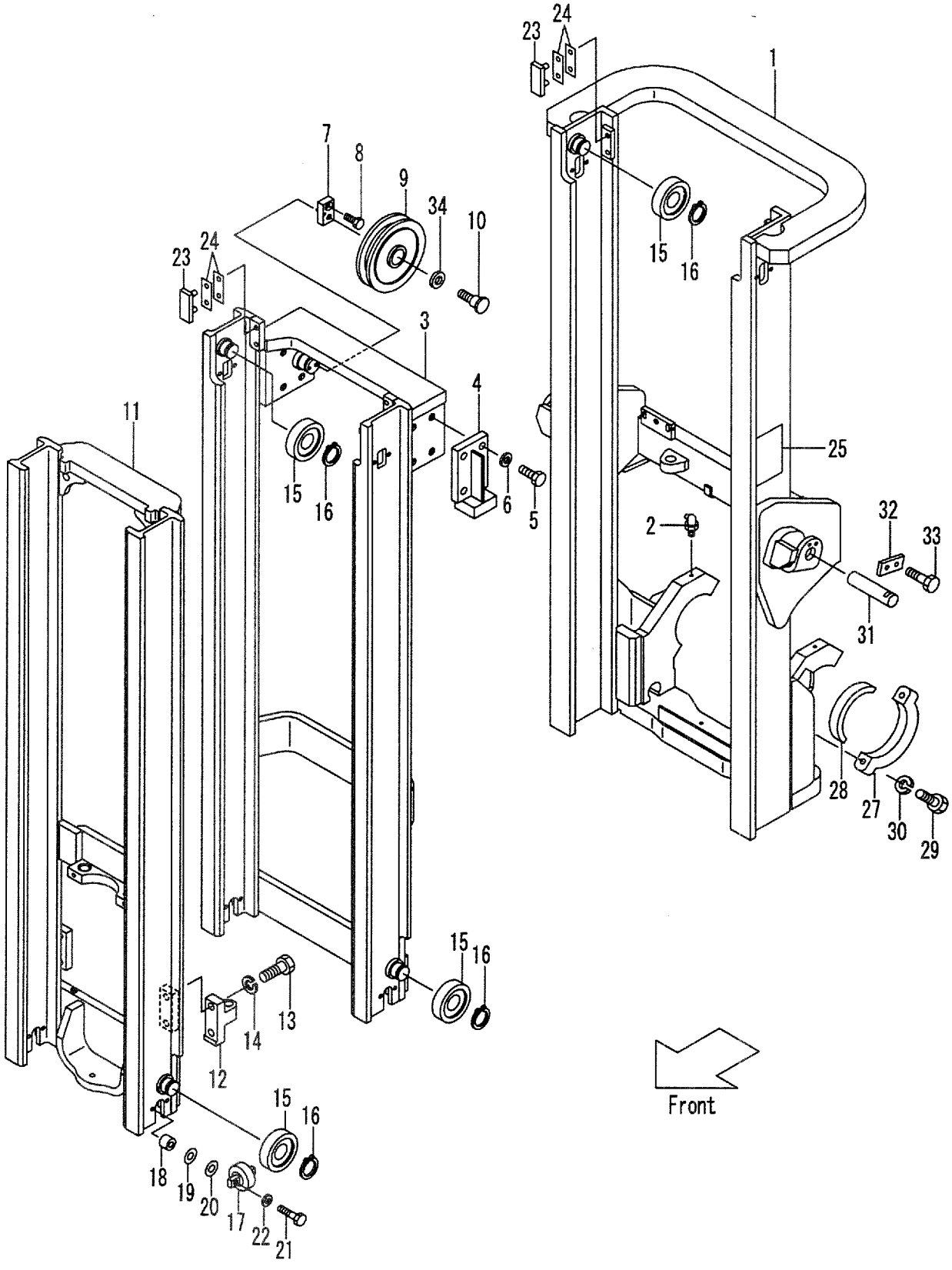

A:VFHM28C(FD45,FG45)

Item No	Part No.	Mark	Description	Req'd	Remarks : Serial No.
-	529F3-82111	+	CHART,CAPACITY チャート	1	(SWEDISH)

FIG.214 LAMP GUARD [(HL,HLG/HL,BKH)/VFHM28C](OLD PART)

(M40483D0) ﾗﾝﾌﾟｶﾞｰﾄﾞ

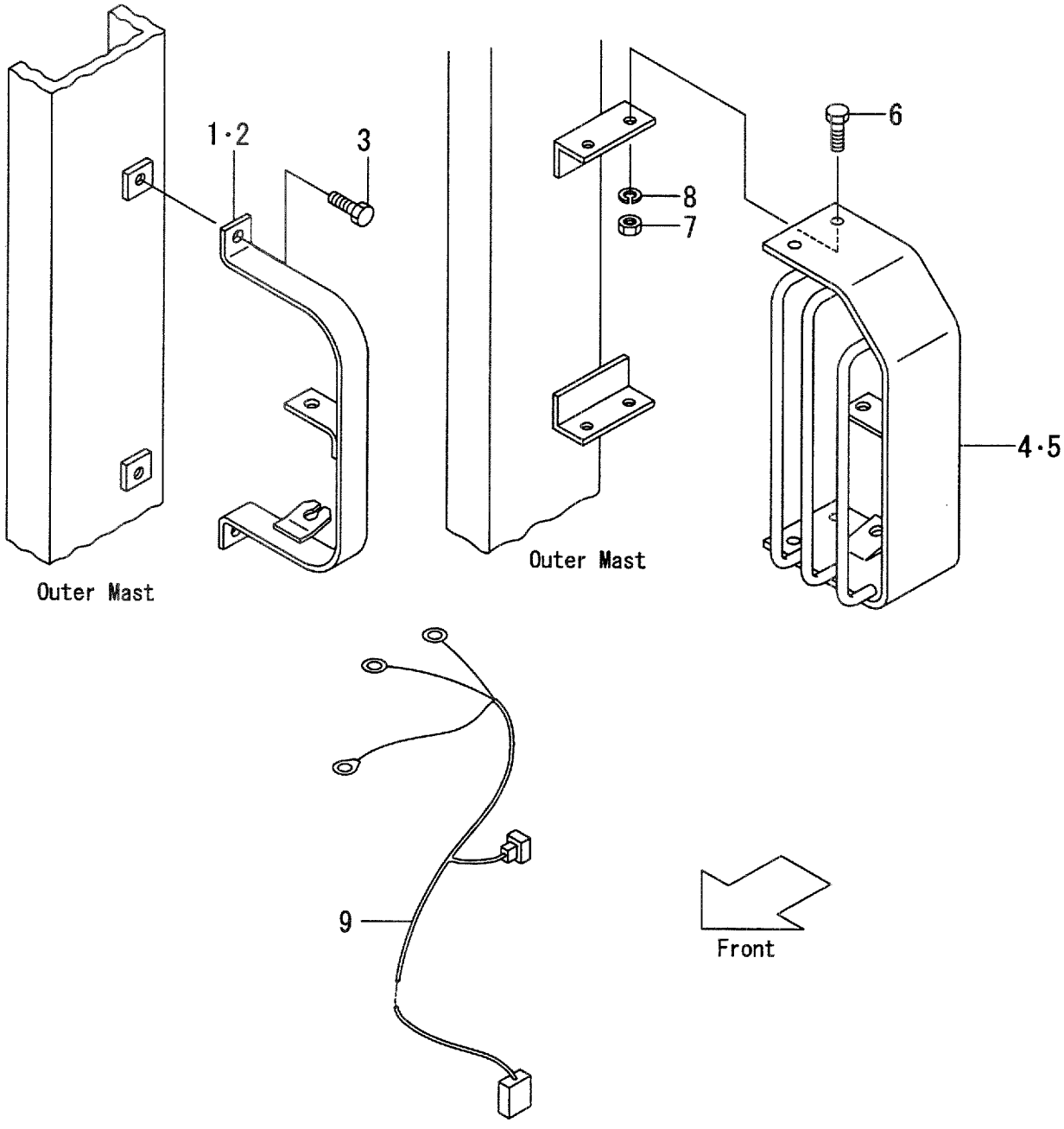

A:VFHM28C(FD45,FG45)

Item No	Part No.	Mark	Description		Req'd	Remarks : Serial No.
1	224W2-43001		BRACKET,LH	ﾌﾞﾗｹｯﾄ	1	[HL]
2	224W2-43011		BRACKET,RH	ﾌﾞﾗｹｯﾄ	1	[HL]
3	01184-12020		BOLT	ﾎﾞﾙﾄ	4	[HL]
4	224W2-43031		GUARD,HEAD-LAMP,LH	ｶﾞｰﾄﾞ	1	[HLG/HL][BKH]
5	224W2-43041		GUARD,HEAD-LAMP,RH	ｶﾞｰﾄﾞ	1	[HLG/HL][BKH]
6	01100-12030		BOLT	ﾎﾞﾙﾄ	8	[HLG/HL][BKH]
7	02010-00012		WASHER	ﾜｯｼｬ	8	[HLG/HL][BKH]
8	01400-00012		NUT	ﾅｯﾄ	8	[HLG/HL][BKH]
9	224W2-43081		WIRE-HARNESS	ﾜｲﾔﾊｰﾈｽ	2	[HL/VM360-435]
						[HGL/HL/VM360-435]
						[BKH/VM360-435]
-	224W2-43091		WIRE-HARNESS	ﾜｲﾔﾊｰﾈｽ	2	[HL/VM480-800]
						[HGL/HL/VM480-800]
						[BKH/VM480-800]

FIG.214A LAMP GUARD [(HL,BKH)/VFHM28C](NEW PART)

(M40483D1) ﾗﾝﾌﾟｶﾞｰﾄﾞ

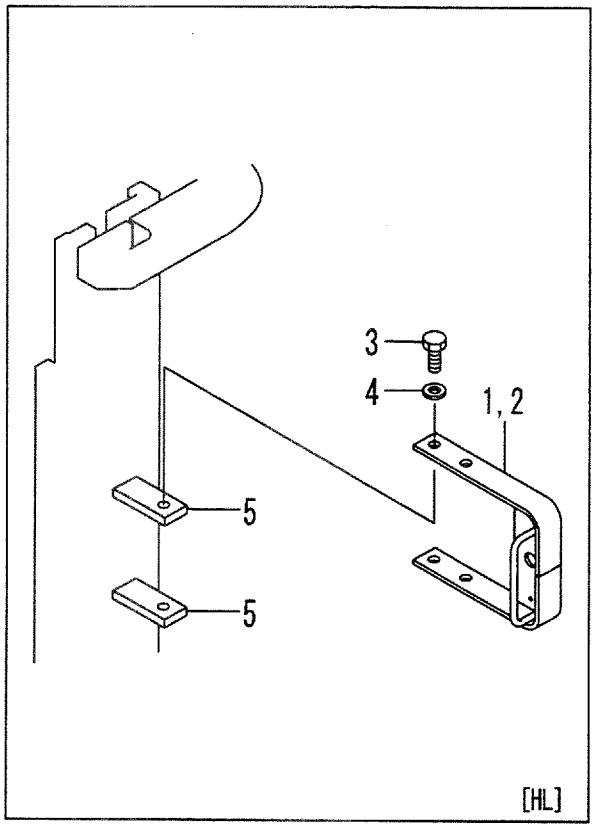

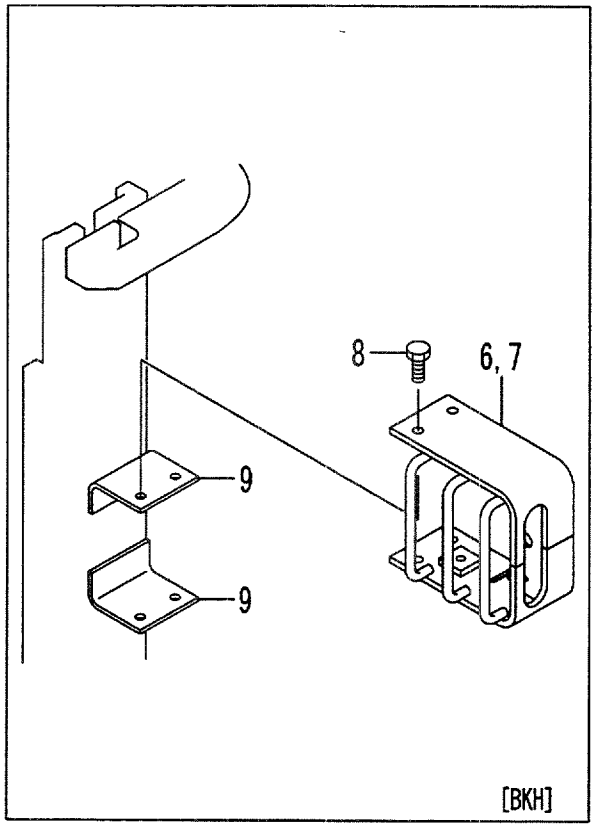

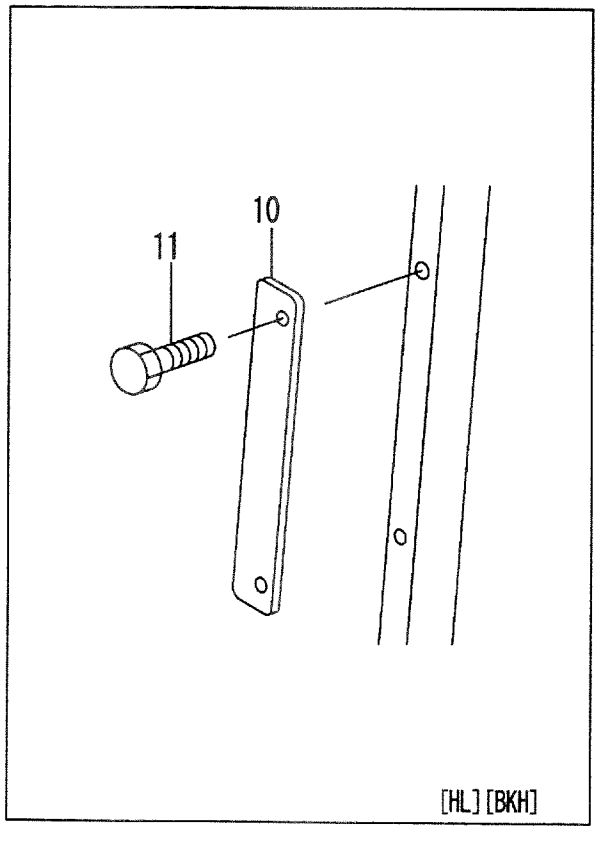

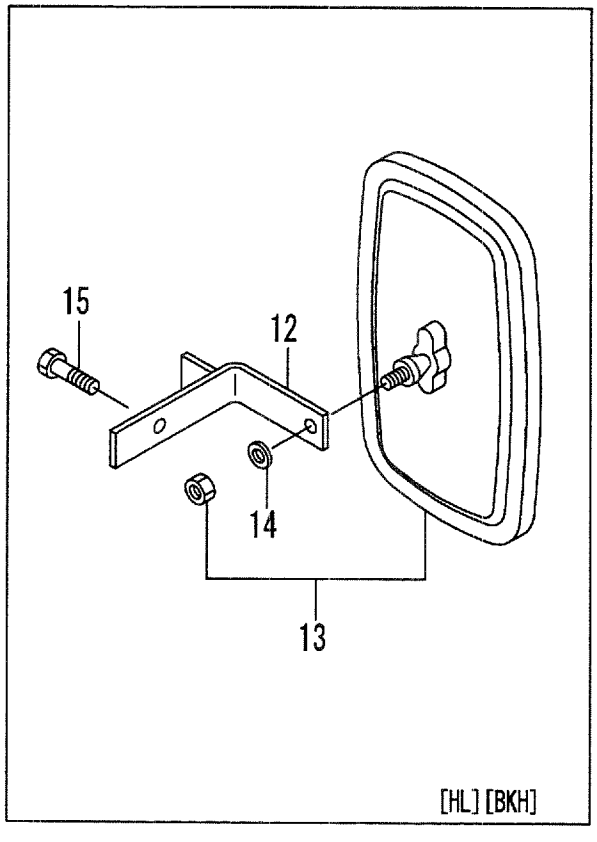

A:VFHM28C (FD45, FG45)

Item No	Part No.	Mark	Description		Req'd	Remarks : Serial No.
1	534A9-22011		BRACKET,LH	ﾌﾞﾗｹｯﾄ	1	[HL]
2	534A9-22001		BRACKET,RH	ﾌﾞﾗｹｯﾄ	1	[HL]
3	01100-12020		BOLT	ﾎﾞﾙﾄ	4	[HL]
4	02010-00012		WASHER	ﾜｯｼｬ	4	[HL]
5	535C9-22111		BLOCK,TAPPED	ﾌﾞﾛｯｸ	4	[HL]
6	534A4-22011		GUARD,LH	ｶﾞｰﾄﾞ	1	[BKH]
7	534A4-22001		GUARD,RH	ｶﾞｰﾄﾞ	1	[BKH]
8	01184-12020		BOLT & WASHER	ﾎﾞﾙﾄ&ﾜｯｼｬ	8	[BKH]
9	535C9-22101		BRACKET	ﾌﾞﾗｹｯﾄ	4	[BKH]
10	534A9-22301		PLATE	ﾌﾟﾚｰﾄ	2	[HL][BKH]
11	01100-08012		BOLT	ﾎﾞﾙﾄ	4	[HL][BKH]
12	535C9-22401		BRACKET	ﾌﾞﾗｹｯﾄ	2	[HL][BKH]
13	239A9-92001		MIRROR	ﾐﾗｰ	2	[HL][BKH]
14	222A9-32011		WASHER	ﾜｯｼｬ	2	[HL][BKH]
15	514A5-12021		BOLT	ﾎﾞﾙﾄ	2	[HL][BKH]
16	535C9-22301	+	WIRE-HARNESS	ﾜｲﾔﾊｰﾈｽ	2	[HL][BKH]
17	27732-42221	+	CLAMP	ｸﾗﾝﾌﾟ	4	[HL][BKH]
18	04913-11380	+	BAND	ﾊﾞﾝﾄﾞ	6	[HL][BKH]

FIG.215 LIFT CYLINDER (FRONT)[VFHM28C]

(M4040820) リフトシリンダ

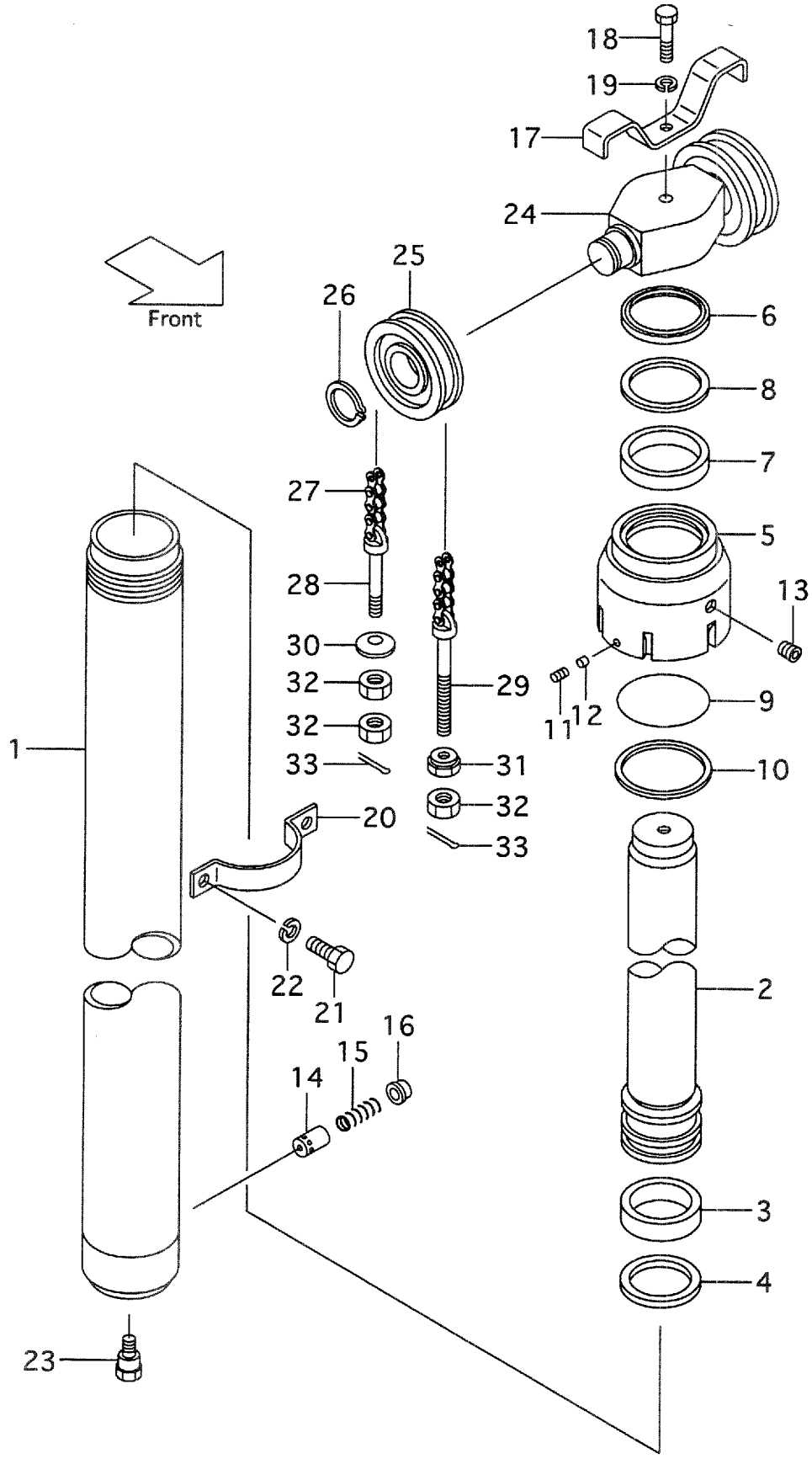

A:VFHM28C(FD45,FG45)

Item No	Part No.	Mark	Description	Req'd	Remarks : Serial No.
A1	228C0-80011		CYL-ASSY,LIFT VFHM360 ﾘﾌﾄｼﾘﾝﾀﾞｱｯｾﾝ	1	MAST NO.1-306 INC.1-16
-	228C0-80012		CYL-ASSY,LIFT VFHM360 ﾘﾌﾄｼﾘﾝﾀﾞｱｯｾﾝ	1	MAST NO.307- INC.1-16
-	228C0-80021		CYL-ASSY,LIFT VFHM400 ﾘﾌﾄｼﾘﾝﾀﾞｱｯｾﾝ	1	MAST NO.1-306 INC.1-16
-	228C0-80022		CYL-ASSY,LIFT VFHM400 ﾘﾌﾄｼﾘﾝﾀﾞｱｯｾﾝ	1	MAST NO.307- INC.1-16
-	228C0-80001		CYL-ASSY,LIFT VFHM435 ﾘﾌﾄｼﾘﾝﾀﾞｱｯｾﾝ	1	MAST NO.1-306 INC.1-16
-	228C0-80002		CYL-ASSY,LIFT VFHM435 ﾘﾌﾄｼﾘﾝﾀﾞｱｯｾﾝ	1	MAST NO.307- INC.1-16
-	228C0-80031		CYL-ASSY,LIFT VFHM480 ﾘﾌﾄｼﾘﾝﾀﾞｱｯｾﾝ	1	MAST NO.1-306 INC.1-16
-	228C0-80032		CYL-ASSY,LIFT VFHM480 ﾘﾌﾄｼﾘﾝﾀﾞｱｯｾﾝ	1	MAST NO.307- INC.1-16
-	228C0-80041		CYL-ASSY,LIFT VFHM500 ﾘﾌﾄｼﾘﾝﾀﾞｱｯｾﾝ	1	MAST NO.1-306 INC.1-16
-	228C0-80042		CYL-ASSY,LIFT VFHM500 ﾘﾌﾄｼﾘﾝﾀﾞｱｯｾﾝ	1	MAST NO.307- INC.1-16
-	228C0-80051		CYL-ASSY,LIFT VFHM540 ﾘﾌﾄｼﾘﾝﾀﾞｱｯｾﾝ	1	MAST NO.1-306 INC.1-16
-	228C0-80052		CYL-ASSY,LIFT VFHM540 ﾘﾌﾄｼﾘﾝﾀﾞｱｯｾﾝ	1	MAST NO.307- INC.1-16
-	228C0-80061		CYL-ASSY,LIFT VFHM550 ﾘﾌﾄｼﾘﾝﾀﾞｱｯｾﾝ	1	MAST NO.1-306 INC.1-16
-	228C0-80062		CYL-ASSY,LIFT VFHM550 ﾘﾌﾄｼﾘﾝﾀﾞｱｯｾﾝ	1	MAST NO.307- INC.1-16
-	228C0-80071		CYL-ASSY,LIFT VFHM600 ﾘﾌﾄｼﾘﾝﾀﾞｱｯｾﾝ	1	MAST NO.1-306 INC.1-16
-	228C0-80072		CYL-ASSY,LIFT VFHM600 ﾘﾌﾄｼﾘﾝﾀﾞｱｯｾﾝ	1	MAST NO.307- INC.1-16
-	228C0-80081		CYL-ASSY,LIFT VFHM650 ﾘﾌﾄｼﾘﾝﾀﾞｱｯｾﾝ	1	MAST NO.1-306 INC.1-16
-	228C0-80082		CYL-ASSY,LIFT VFHM650 ﾘﾌﾄｼﾘﾝﾀﾞｱｯｾﾝ	1	MAST NO.307- INC.1-16
-	228C0-80091		CYL-ASSY,LIFT VFHM700 ﾘﾌﾄｼﾘﾝﾀﾞｱｯｾﾝ	1	MAST NO.1-306 INC.1-16
-	228C0-80092		CYL-ASSY,LIFT VFHM700 ﾘﾌﾄｼﾘﾝﾀﾞｱｯｾﾝ	1	MAST NO.307- INC.1-16
-	228C0-80101		CYL-ASSY,LIFT VFHM750 ﾘﾌﾄｼﾘﾝﾀﾞｱｯｾﾝ	1	MAST NO.1-306 INC.1-16
-	228C0-80102		CYL-ASSY,LIFT VFHM750 ﾘﾌﾄｼﾘﾝﾀﾞｱｯｾﾝ	1	MAST NO.307- INC.1-16
-	228C0-80111		CYL-ASSY,LIFT VFHM800 ﾘﾌﾄｼﾘﾝﾀﾞｱｯｾﾝ	1	MAST NO.1-306 INC.1-16
-	228C0-80112		CYL-ASSY,LIFT VFHM800 ﾘﾌﾄｼﾘﾝﾀﾞｱｯｾﾝ	1	MAST NO.307- INC.1-16
1	228C0-80211		TUBE VFHM360 ﾁｭｰﾌﾞ	1	
-	228C0-80221		TUBE VFHM400 ﾁｭｰﾌﾞ	1	

FIG.215 LIFT CYLINDER (FRONT)[VFHM28C]

(M4040820) リフトシリンダ

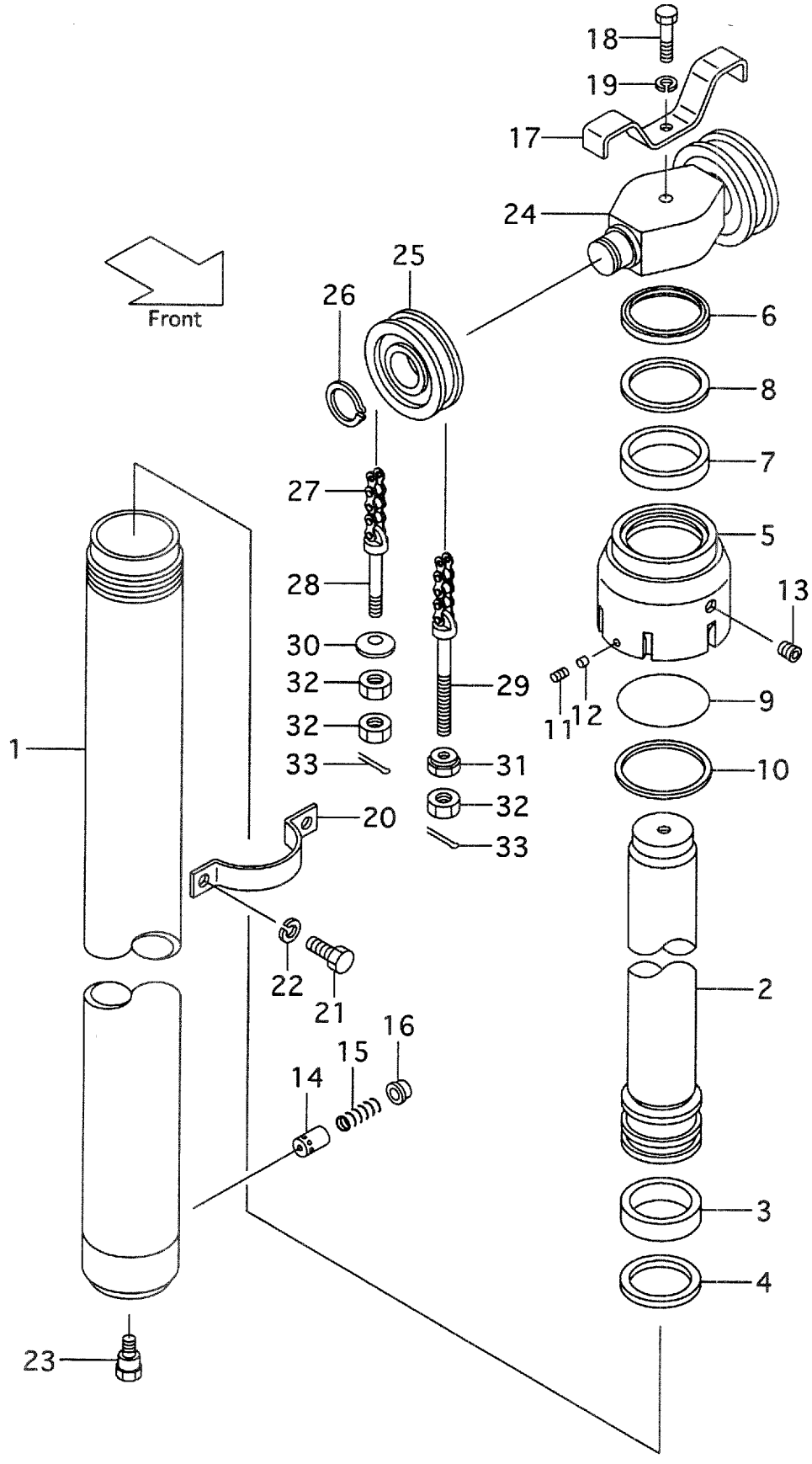

A:VFHM28C(FD45,FG45)

Item No	Part No.	Mark	Description		Req'd	Remarks : Serial No.
-	228C0-80201		TUBE VFHM435	ﾁｭｰﾌﾞ	1	
-	228C0-80231		TUBE VFHM480	ﾁｭｰﾌﾞ	1	
-	228C0-80241		TUBE VFHM500	ﾁｭｰﾌﾞ	1	
-	228C0-80251		TUBE VFHM540	ﾁｭｰﾌﾞ	1	
-	228C0-80261		TUBE VFHM550	ﾁｭｰﾌﾞ	1	
-	228C0-80271		TUBE VFHM600	ﾁｭｰﾌﾞ	1	
-	228C0-80281		TUBE VFHM650	ﾁｭｰﾌﾞ	1	
-	228C0-80291		TUBE VFHM700	ﾁｭｰﾌﾞ	1	
-	228C0-80301		TUBE VFHM750	ﾁｭｰﾌﾞ	1	
-	228C0-80311		TUBE VFHM800	ﾁｭｰﾌﾞ	1	
2	228C0-80411		ROD,PISTON VFHM360	ﾛｯﾄﾞ	1	
-	228C0-80421		ROD,PISTON VFHM400	ﾛｯﾄﾞ	1	
-	228C0-80401		ROD,PISTON VFHM435	ﾛｯﾄﾞ	1	
-	228C0-80431		ROD,PISTON VFHM480	ﾛｯﾄﾞ	1	
-	228C0-80441		ROD,PISTON VFHM500	ﾛｯﾄﾞ	1	
-	228C0-80451		ROD,PISTON VFHM540	ﾛｯﾄﾞ	1	
-	228C0-80461		ROD,PISTON VFHM550	ﾛｯﾄﾞ	1	
-	228C0-80471		ROD,PISTON VFHM600	ﾛｯﾄﾞ	1	
-	228C0-80481		ROD,PISTON VFHM650	ﾛｯﾄﾞ	1	
-	228C0-80491		ROD,PISTON VFHM700	ﾛｯﾄﾞ	1	
-	228C0-80501		ROD,PISTON VFHM750	ﾛｯﾄﾞ	1	
-	228C0-80511		ROD,PISTON VFHM800	ﾛｯﾄﾞ	1	
3	228C0-82431	*	WEARING	ｳｴｱﾘﾝｸﾞ	1	
4	228C0-82441	*	SEAL	ｼｰﾙ	1	
5	228C0-82501		CAP	ｷｬｯﾌﾟ	1	
6	228C0-82531	*	SEAL	ｼｰﾙ	1	
7	228C0-82511	*	PACKING	ﾊﾟｯｷﾝｸﾞ	1	
8	228C0-82521	*	RING	ﾘﾝｸﾞ	1	
9	03350-01400	*	O-RING	Oﾘﾝｸﾞ	1	
10	228C0-82541	*	RING	ﾘﾝｸﾞ	1	
11	25908-44101		PLUG	ﾌﾟﾗｸﾞ	1	
12	25908-44111		PLUG,NYLON	ﾌﾟﾗｸﾞ	1	
13	22518-40151		PLUG	ﾌﾟﾗｸﾞ	1	
14	24389-46011		PISTON	ﾋﾟｽﾄﾝ	1	
15	24389-46021		SPRING	ｽﾌﾟﾘﾝｸﾞ	1	MAST NO.1-306
-	224T0-53451		SPRING	ｽﾌﾟﾘﾝｸﾞ	1	MAST NO.307-
16	24310-82641		RETAINER	ﾘﾃｰﾅ	1	
17	24310-82291		STOPPER	ｽﾄｯﾊﾟ	1	
18	01103-16070		BOLT	ﾎﾞﾙﾄ	1	
19	02011-00016		WASHER	ﾜｯｼｬ	1	
20	228C0-82421		SUPPORT	ｻﾎﾟｰﾄ	1	
21	01103-12025		BOLT	ﾎﾞﾙﾄ	2	
22	02011-00012		WASHER	ﾜｯｼｬ	2	
23	224T0-82561		BOLT	ﾎﾞﾙﾄ	1	
A2	24310-80271		HEAD-ASSY,PISTON	ﾋﾟｽﾄﾝﾍｯﾄﾞｱｯｾﾝ	1	INC.24-26
24	24310-82281		HEAD,PISTON	ﾍｯﾄﾞ	1	
25	24609-41241		SHEAVE	ｼｰﾌﾞ	2	
26	02100-00050		RING,SNAP	ｽﾅｯﾌﾟﾘﾝｸﾞ	2	
27	23918-45531		CHAIN,LEAF VFHM360	ﾁｪｰﾝ	2	
-	23918-45551		CHAIN,LEAF VFHM400	ﾁｪｰﾝ	2	

FIG.215 LIFT CYLINDER (FRONT)[VFHM28C]

(M4040820) リフトシリンダ

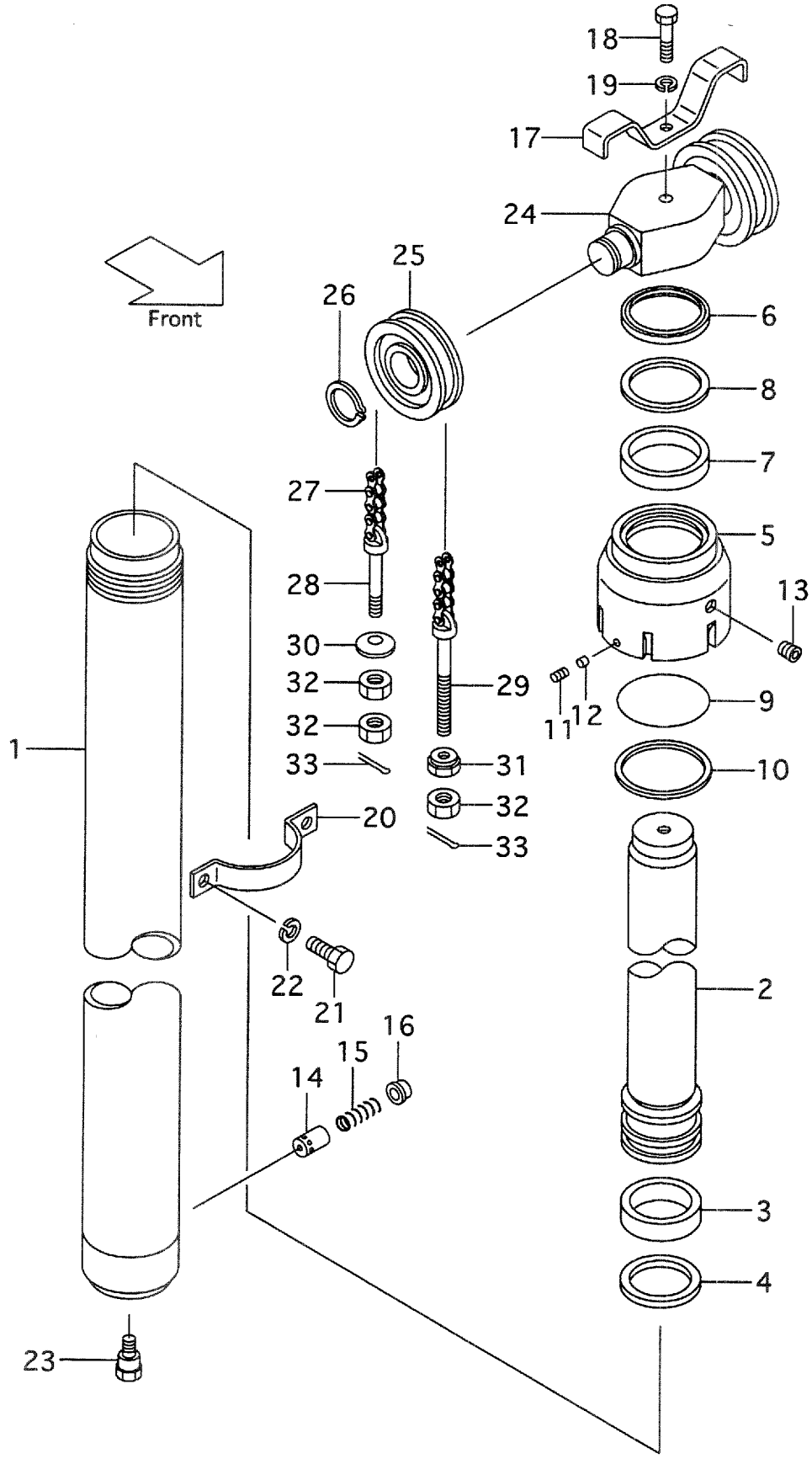

A:VFHM28C(FD45,FG45)

Item No	Part No.	Mark	Description	Req'd	Remarks : Serial No.
-	23918-45571		CHAIN,LEAF VFHM435 チェーン	2	
-	23918-45611		CHAIN,LEAF VFHM480 チェーン	2	
-	23918-45651		CHAIN,LEAF VFHM500 チェーン	2	
-	23918-45711		CHAIN,LEAF VFHM540 チェーン	2	
-	23918-45711		CHAIN,LEAF VFHM550 チェーン	2	
-	23918-45791		CHAIN,LEAF VFHM600 チェーン	2	
-	23918-45871		CHAIN,LEAF VFHM650 チェーン	2	
-	23918-45951		CHAIN,LEAF VFHM700 チェーン	2	
-	23918-46031		CHAIN,LEAF VFHM750 チェーン	2	
-	23918-46091		CHAIN,LEAF VFHM800 チェーン	2	
28	24329-45441		PIN ピン	2	
29	23918-42681		PIN ピン	2	
30	24319-45751		CONE コーン	2	
31	23818-30271		NUT ナット	2	
32	01402-00022		NUT ナット	6	
33	02200-03040		PIN,COTTER ピン	4	
K1	228C0-59801		KIT,OVERHAUL オーバホールキット	1	INC.3,4,6-10

FIG.216 LIFT CYLINDER (REAR)[VFHM28C]

(M4040850) リフトシリンダ

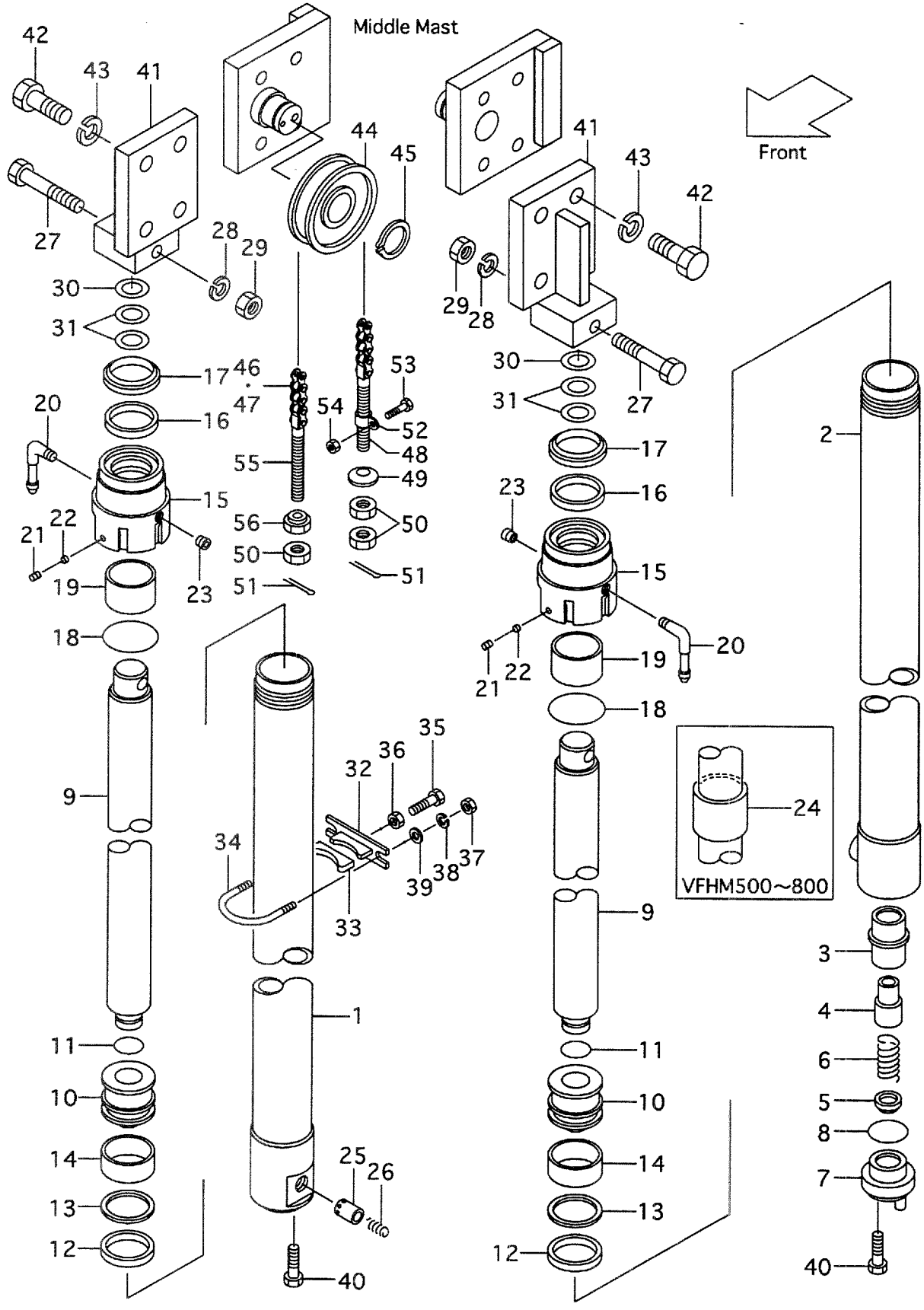

A:VFHM28C(FD45,FG45)

Item No	Part No.	Mark	Description	Req'd	Remarks : Serial No.
A1	228C0-81011		CYL-ASSY,LIFT,RH VFHM360 リフトシリンダアッセン	1	INC.1-23
-	228C0-81021		CYL-ASSY,LIFT,RH VFHM400 リフトシリンダアッセン	1	INC.1-23
-	228C0-81001		CYL-ASSY,LIFT,RH VFHM435 リフトシリンダアッセン	1	INC.1-23
-	228C0-81031		CYL-ASSY,LIFT,RH VFHM480 リフトシリンダアッセン	1	INC.1-23
-	228C0-81041		CYL-ASSY,LIFT,RH VFHM500 リフトシリンダアッセン	1	INC.1-23
-	228C0-81051		CYL-ASSY,LIFT,RH VFHM540 リフトシリンダアッセン	1	INC.1-23
-	228C0-81061		CYL-ASSY,LIFT,RH VFHM550 リフトシリンダアッセン	1	INC.1-23
-	228C0-81071		CYL-ASSY,LIFT,RH VFHM600 リフトシリンダアッセン	1	INC.1-23
-	228C0-81081		CYL-ASSY,LIFT,RH VFHM650 リフトシリンダアッセン	1	INC.1-23
-	228C0-81091		CYL-ASSY,LIFT,RH VFHM700 リフトシリンダアッセン	1	INC.1-23
-	228C0-81101		CYL-ASSY,LIFT,RH VFHM750 リフトシリンダアッセン	1	INC.1-23
-	228C0-81111		CYL-ASSY,LIFT,RH VFHM800 リフトシリンダアッセン	1	INC.1-23
-	228C0-81211		CYL-ASSY,LIFT,LH VFHM360 リフトシリンダアッセン	1	INC.2-23
-	228C0-81221		CYL-ASSY,LIFT,LH VFHM400 リフトシリンダアッセン	1	INC.2-23
-	228C0-81201		CYL-ASSY,LIFT,LH VFHM435 リフトシリンダアッセン	1	INC.2-23
-	228C0-81231		CYL-ASSY,LIFT,LH VFHM480 リフトシリンダアッセン	1	INC.2-23
-	228C0-81241		CYL-ASSY,LIFT,LH VFHM500 リフトシリンダアッセン	1	INC.2-23
-	228C0-81251		CYL-ASSY,LIFT,LH VFHM540 リフトシリンダアッセン	1	INC.2-23
-	228C0-81261		CYL-ASSY,LIFT,LH VFHM550 リフトシリンダアッセン	1	INC.2-23
-	228C0-81271		CYL-ASSY,LIFT,LH VFHM600 リフトシリンダアッセン	1	INC.2-23
-	228C0-81281		CYL-ASSY,LIFT,LH VFHM650 リフトシリンダアッセン	1	INC.2-23
-	228C0-81291		CYL-ASSY,LIFT,LH VFHM700 リフトシリンダアッセン	1	INC.2-23
-	228C0-81301		CYL-ASSY,LIFT,LH VFHM750 リフトシリンダアッセン	1	INC.2-23
-	228C0-81311		CYL-ASSY,LIFT,LH VFHM800 リフトシリンダアッセン	1	INC.2-23
1	228C0-81411		TUBE,RH VFHM360 チューブ	1	
-	228C0-81421		TUBE,RH VFHM400 チューブ	1	

FIG.216 LIFT CYLINDER (REAR)[VFHM28C]

(M4040850) リフトシリンダ

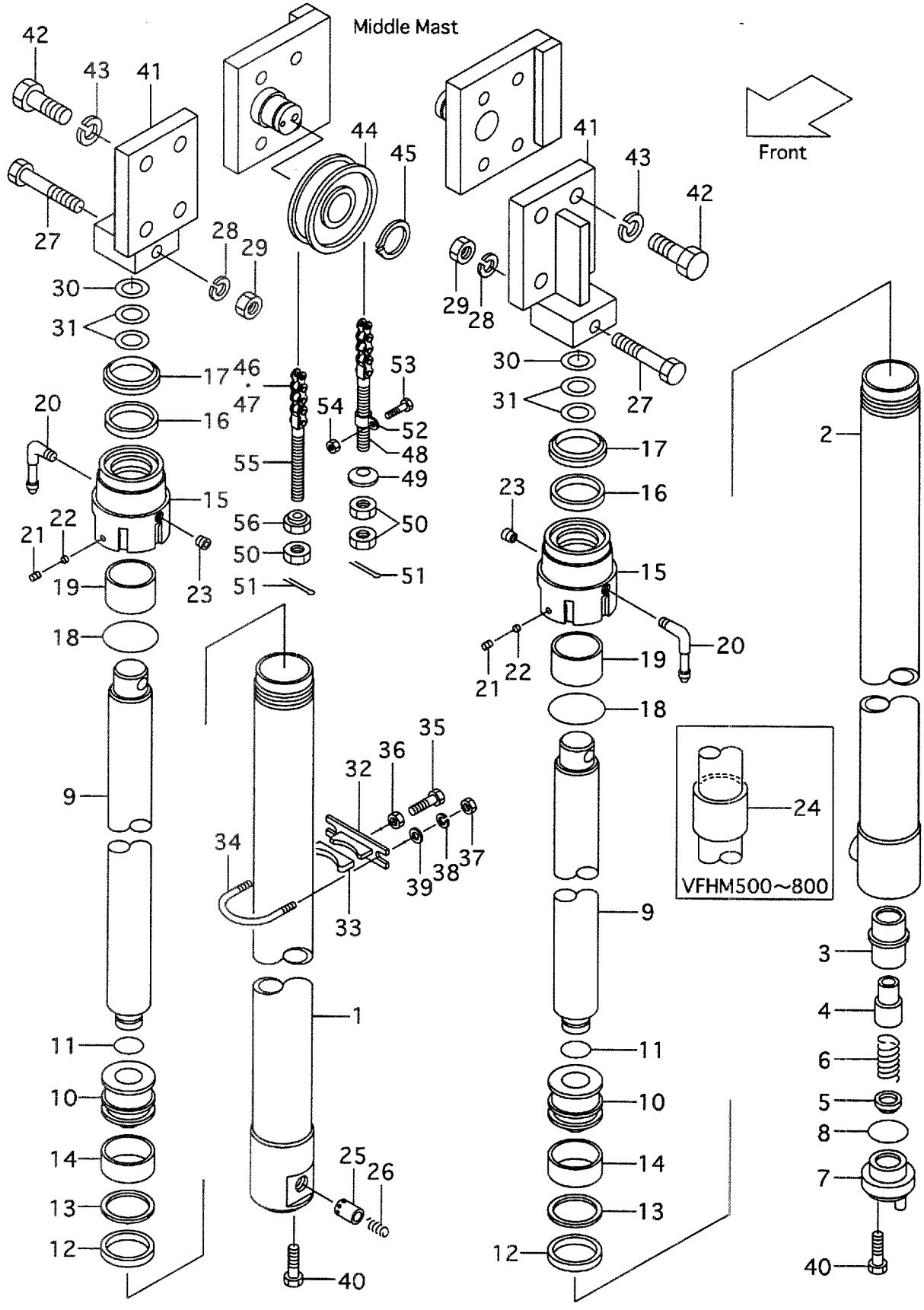

A:VFHM28C(FD45,FG45)

Item No	Part No.	Mark	Description		Req'd	Remarks : Serial No.
-	228C0-81401		TUBE,RH VFHM435	ﾁｭｰﾌﾞ	1	
-	228C0-81431		TUBE,RH VFHM480	ﾁｭｰﾌﾞ	1	
-	228C0-81441		TUBE,RH VFHM500	ﾁｭｰﾌﾞ	1	
-	228C0-81451		TUBE,RH VFHM540	ﾁｭｰﾌﾞ	1	
-	228C0-81461		TUBE,RH VFHM550	ﾁｭｰﾌﾞ	1	
-	228C0-81471		TUBE,RH VFHM600	ﾁｭｰﾌﾞ	1	
-	228C0-81481		TUBE,RH VFHM650	ﾁｭｰﾌﾞ	1	
-	228C0-81491		TUBE,RH VFHM700	ﾁｭｰﾌﾞ	1	
-	228C0-81501		TUBE,RH VFHM750	ﾁｭｰﾌﾞ	1	
-	228C0-81511		TUBE,RH VFHM800	ﾁｭｰﾌﾞ	1	
2	228C0-81611		TUBE,LH VFHM360	ﾁｭｰﾌﾞ	1	
-	228C0-81621		TUBE,LH VFHM400	ﾁｭｰﾌﾞ	1	
-	228C0-81601		TUBE,LH VFHM435	ﾁｭｰﾌﾞ	1	
-	228C0-81631		TUBE,LH VFHM480	ﾁｭｰﾌﾞ	1	
-	228C0-81641		TUBE,LH VFHM500	ﾁｭｰﾌﾞ	1	
-	228C0-81651		TUBE,LH VFHM540	ﾁｭｰﾌﾞ	1	
-	228C0-81661		TUBE,LH VFHM550	ﾁｭｰﾌﾞ	1	
-	228C0-81671		TUBE,LH VFHM600	ﾁｭｰﾌﾞ	1	
-	228C0-81681		TUBE,LH VFHM650	ﾁｭｰﾌﾞ	1	
-	228C0-81691		TUBE,LH VFHM700	ﾁｭｰﾌﾞ	1	
-	228C0-81701		TUBE,LH VFHM750	ﾁｭｰﾌﾞ	1	
-	228C0-81711		TUBE,LH VFHM800	ﾁｭｰﾌﾞ	1	
3	25790-83322		SLEEVE	ｽﾘｰﾌﾞ	1	(LH)
4	25790-83311		PISTON	ﾋﾟｽﾄﾝ	1	(LH)
5	25790-83341		CHECK	ﾁｪｯｸ	1	(LH)
6	25790-83351		SPRING	ｽﾌﾟﾘﾝｸﾞ	1	(LH)
7	228C0-83201		PLUG	ﾌﾟﾗｸﾞ	1	(LH)
8	03320-00400		O-RING	Oﾘﾝｸﾞ	1	(LH)
9	228C0-82811		ROD,PISTON VFHM360	ﾛｯﾄﾞ	2	
-	228C0-82821		ROD,PISTON VFHM400	ﾛｯﾄﾞ	2	
-	228C0-82801		ROD,PISTON VFHM435	ﾛｯﾄﾞ	2	
-	228C0-82831		ROD,PISTON VFHM480	ﾛｯﾄﾞ	2	
-	228C0-82841		ROD,PISTON VFHM500	ﾛｯﾄﾞ	2	
-	228C0-82851		ROD,PISTON VFHM540	ﾛｯﾄﾞ	2	
-	228C0-82861		ROD,PISTON VFHM550	ﾛｯﾄﾞ	2	
-	228C0-82871		ROD,PISTON VFHM600	ﾛｯﾄﾞ	2	
-	228C0-82881		ROD,PISTON VFHM650	ﾛｯﾄﾞ	2	
-	228C0-82891		ROD,PISTON VFHM700	ﾛｯﾄﾞ	2	
-	228C0-82901		ROD,PISTON VFHM750	ﾛｯﾄﾞ	2	
-	228C0-82911		ROD,PISTON VFHM800	ﾛｯﾄﾞ	2	
10	228C8-42501		PISTON	ﾋﾟｽﾄﾝ	2	
11	224T8-42512		RING,SNAP	ｽﾅｯﾌﾟﾘﾝｸﾞ	2	
12	22580-82471	*	PACKING	ﾊﾟｯｷﾝｸﾞ	2	
13	228C8-42541	*	RING,BACK-UP	ﾘﾝｸﾞ	2	
14	22580-82461	*	WEARING	ｳｴｱﾘﾝｸﾞ	2	
15	228C8-42401		CAP	ｷｬｯﾌﾟ	2	
16	224T8-46011	*	PACKING	ﾊﾟｯｷﾝｸﾞ	2	
17	224T8-46001	*	SEAL,DUST	ｼｰﾙ	2	
18	03340-00130	*	O-RING	Oﾘﾝｸﾞ	2	
19	23460-53171		BUSHING	ﾌﾞｯｼﾝｸﾞ	2	

FIG.216 LIFT CYLINDER (REAR)[VFHM28C]

(M4040850) リフトシリンダ

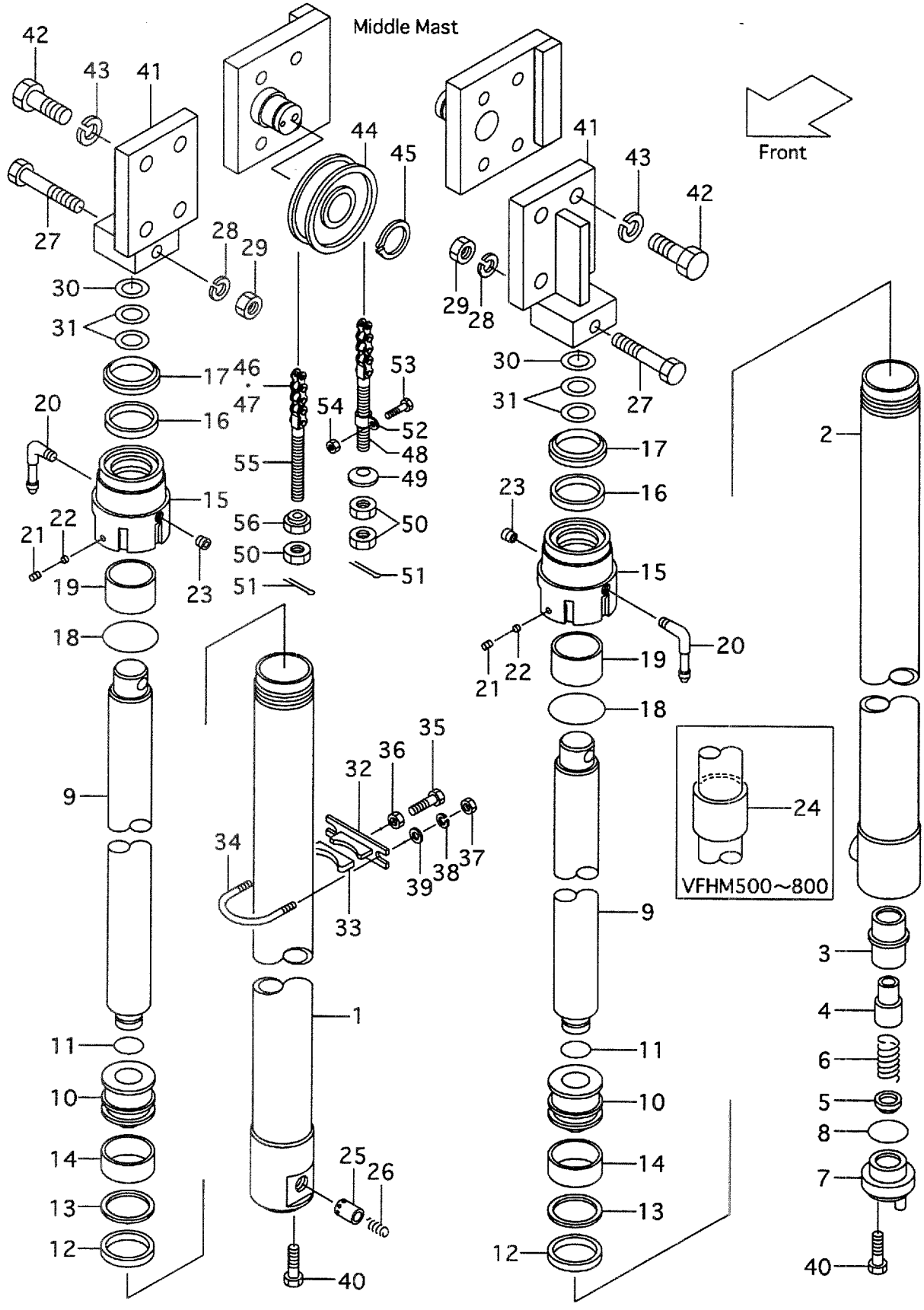

A:VFHM28C(FD45,FG45)

Item No	Part No.	Mark	Description		Req'd	Remarks : Serial No.
20	24329-45531		ELBOW	ｴﾙﾎﾞ	2	
21	25908-44101		PLUG	ﾌﾟﾗｸﾞ	2	
22	25908-44111		PLUG,NYLON	ﾌﾟﾗｸﾞ	2	
23	24329-45541		PLUG	ﾌﾟﾗｸﾞ	2	
24	224T8-42471		SPACER VFHM500	ｽﾍﾟｰｻ	2	
-	224T0-83301		SPACER VFHM540	ｽﾍﾟｰｻ	2	
-	224T0-83311		SPACER VFHM550	ｽﾍﾟｰｻ	2	
-	224T0-83321		SPACER VFHM600	ｽﾍﾟｰｻ	2	
-	224T0-83331		SPACER VFHM650	ｽﾍﾟｰｻ	2	
-	224T0-83341		SPACER VFHM700	ｽﾍﾟｰｻ	2	
-	224T0-83351		SPACER VFHM750	ｽﾍﾟｰｻ	2	
-	224T0-83361		SPACER VFHM800	ｽﾍﾟｰｻ	2	
25	228C8-42801		PISTON	ﾋﾟｽﾄﾝ	1	(RH)
26	25908-44281		SPRING	ｽﾌﾟﾘﾝｸﾞ	1	(RH)
27	01100-12090		BOLT	ﾎﾞﾙﾄ	2	
28	02010-00012		WASHER	ﾜｯｼｬ	2	
29	01400-00012		NUT	ﾅｯﾄ	2	
30	23917-42191		SHIM	ｼﾑ	2	
31	23679-43831		SHIM	ｼﾑ	4	
32	224T8-42711		SUPPORT	ｻﾎﾟｰﾄ	2	
33	214A8-42631		RUBBER	ﾗﾊﾞｰ	2	
34	228C8-42701		U-BOLT	Uﾎﾞﾙﾄ	2	
35	01120-16040		BOLT	ﾎﾞﾙﾄ	2	
36	01402-00016		NUT	ﾅｯﾄ	2	
37	01400-00010		NUT	ﾅｯﾄ	4	
38	02010-00010		WASHER	ﾜｯｼｬ	4	
39	02000-00010		WASHER	ﾜｯｼｬ	4	
40	214A0-82831		BOLT	ﾎﾞﾙﾄ	2	
41	224T0-73301		HEAD,PISTON	ﾍｯﾄﾞ	2	
42	01103-22060		BOLT	ﾎﾞﾙﾄ	8	
43	02011-00022		WASHER	ﾜｯｼｬ	8	
44	24609-41241		SHEAVE	ｼｰﾌﾞ	2	
45	02100-00050		RING,SNAP	ｽﾅｯﾌﾟﾘﾝｸﾞ	2	
46	23918-46051		CHAIN,LEAF VFHM360	ﾁｪｰﾝ	2	INC.47
-	23918-45951		CHAIN,LEAF VFHM400	ﾁｪｰﾝ	2	INC.47
-	23918-46051		CHAIN,LEAF VFHM435	ﾁｪｰﾝ	2	INC.47
-	23918-46171		CHAIN,LEAF VFHM480	ﾁｪｰﾝ	2	INC.47
-	23918-46251		CHAIN,LEAF VFHM500	ﾁｪｰﾝ	2	INC.47
-	23918-46351		CHAIN,LEAF VFHM540	ﾁｪｰﾝ	2	INC.47
-	23918-46371		CHAIN,LEAF VFHM550	ﾁｪｰﾝ	2	INC.47
-	23918-46371		CHAIN,LEAF VFHM550	ﾁｪｰﾝ	2	INC.47
-	23918-46091		CHAIN,LEAF VFHM600	ﾁｪｰﾝ	2	INC.47
-	23918-46191		CHAIN,LEAF VFHM650	ﾁｪｰﾝ	2	INC.47
-	23918-46251		CHAIN,LEAF VFHM700	ﾁｪｰﾝ	2	INC.47
-	23918-46331		CHAIN,LEAF VFHM750	ﾁｪｰﾝ	2	INC.47
-	23918-46411		CHAIN,LEAF VFHM800	ﾁｪｰﾝ	2	INC.47

FIG.216 LIFT CYLINDER (REAR)[VFHM28C]

(M4040850) リフトシリンダ

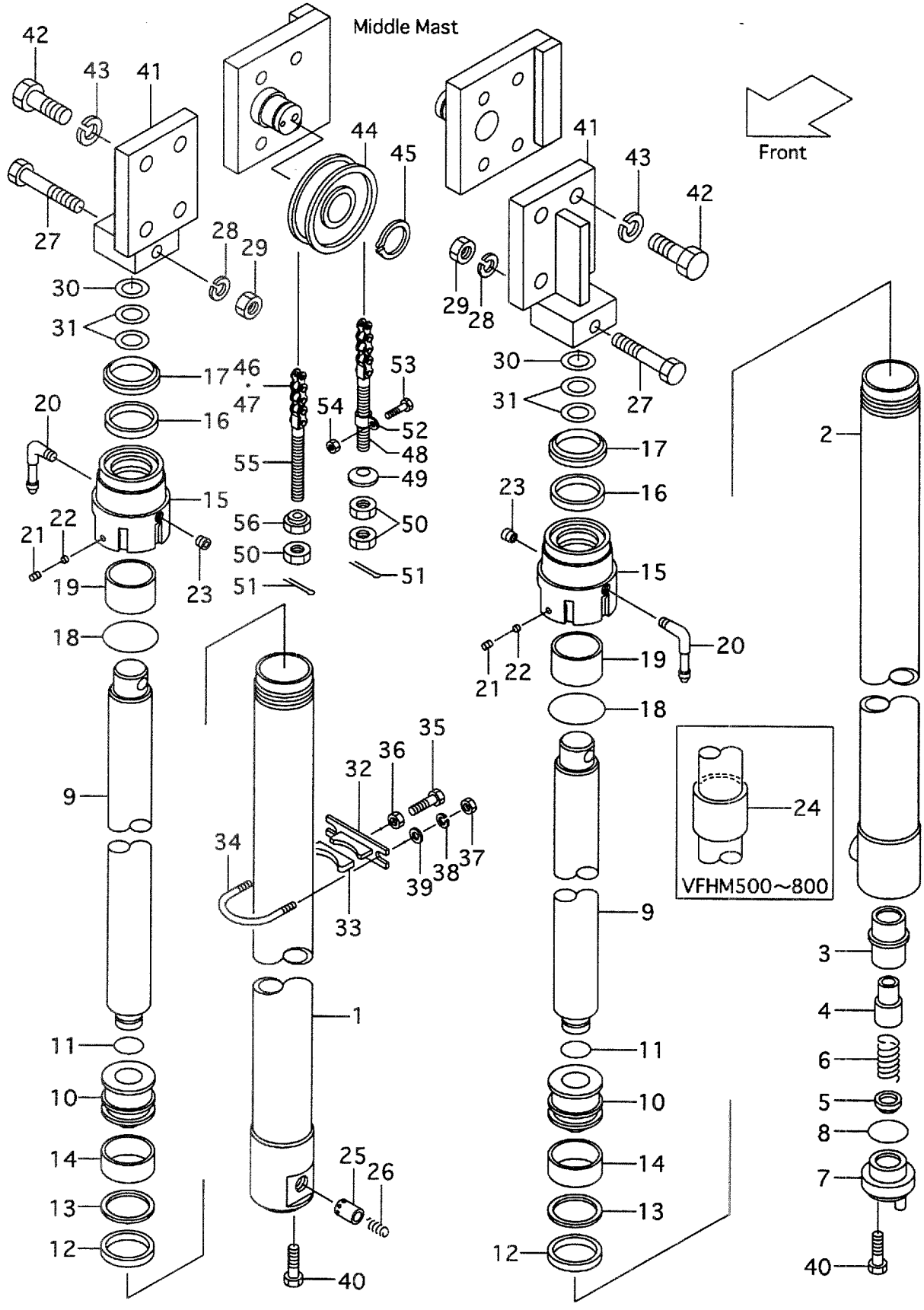

A:VFHM28C(FD45,FG45)

Item No	Part No.	Mark	Description		Req'd	Remarks : Serial No.
47	23958-42921		LINK	ﾘﾝｸ	2	
48	24329-45441		PIN	ﾋﾟﾝ	2	
49	24319-45751		CONE	ｺｰﾝ	2	
50	01402-00022		NUT	ﾅｯﾄ	6	
51	02200-03040		PIN,COTTER	ﾋﾟﾝ	4	
52	224T8-42621		CLIP	ｸﾘｯﾌﾟ	2	
53	01183-06016		BOLT	ﾎﾞﾙﾄ	2	
54	01400-00006		NUT	ﾅｯﾄ	2	
55	23918-42681		PIN	ﾋﾟﾝ	2	
56	23818-30271		NUT	ﾅｯﾄ	2	
K1	228C8-49803		KIT,OVERHAUL	ｵｰﾊﾞｰﾎｰﾙｷｯﾄ	2	INC.12-14,16-18

FIG.217 MAST PIPING [VFHM28C]

(M4040880) マストパイピング

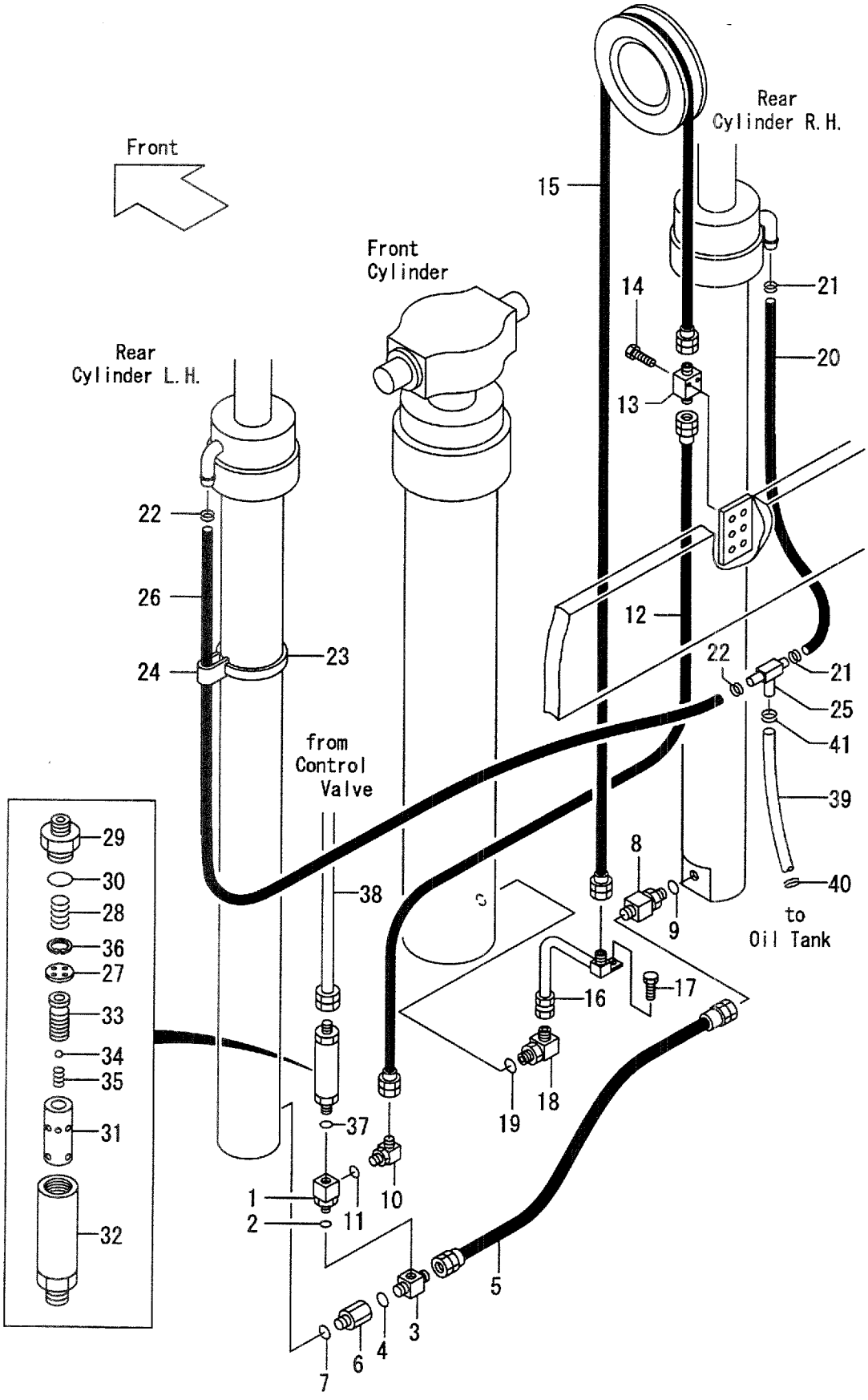

A:VFHM28C(FD45,FG45)

Item No	Part No.	Mark	Description		Req'd	Remarks : Serial No.
A1	224T0-91001		THREE-WAY-ASSY	ｽﾘｰｳｪｲｱｯｾﾝ	1	INC.1,2
1	NO PART NO.	#	THREE-WAY	ｽﾘｰｳｴｲ	1	
2	03320-00240		O-RING	Oﾘﾝｸﾞ	1	
A2	24609-43682		THREE-WAY-ASSY	ｽﾘｰｳｪｲｱｯｾﾝ	1	INC.3,4
3	NO PART NO.	#	THREE-WAY	ｽﾘｰｳｴｲ	1	
4	03320-00180		O-RING	Oﾘﾝｸﾞ	1	
5	224T8-42861		HOSE	ﾎｰｽ	1	
A3	228C0-91011		NIPPLE-ASSY	ﾆｯﾌﾟﾙｱｯｾﾝ	1	INC.6,7
6	NO PART NO.	#	NIPPLE	ﾆｯﾌﾟﾙ	1	
7	03320-00180	*	O-RING	Oﾘﾝｸﾞ	1	
A4	244T8-44001		NIPPLE-ASSY	ﾆｯﾌﾟﾙｱｯｾﾝ	1	INC.8,9
8	NO PART NO.	#	NIPPLE	ﾆｯﾌﾟﾙ	1	
9	03320-00240	*	O-RING	Oﾘﾝｸﾞ	1	
10	24310-92571		ELBOW	ｴﾙﾎﾞ	1	
11	03320-00240		O-RING	Oﾘﾝｸﾞ	1	
12	224T8-02101		HOSE	ﾎｰｽ	1	
13	224T0-92231		NIPPLE	ﾆｯﾌﾟﾙ	1	
14	01184-10060		BOLT	ﾎﾞﾙﾄ	2	
15	22650-92221		HOSE VFHM360	ﾎｰｽ	1	
-	228C0-93011		HOSE VFHM400	ﾎｰｽ	1	
-	228C0-93021		HOSE VFHM435	ﾎｰｽ	1	
-	228C0-93031		HOSE VFHM480	ﾎｰｽ	1	
-	228C0-93041		HOSE VFHM500	ﾎｰｽ	1	
-	228C0-93051		HOSE VFHM540	ﾎｰｽ	1	
-	24600-92251		HOSE VFHM550	ﾎｰｽ	1	
-	228C0-93061		HOSE VFHM600	ﾎｰｽ	1	
-	228C0-93071		HOSE VFHM650	ﾎｰｽ	1	
-	228C0-93081		HOSE VFHM700	ﾎｰｽ	1	
-	228C0-93091		HOSE VFHM750	ﾎｰｽ	1	
-	228C0-93101		HOSE VFHM800	ﾎｰｽ	1	
16	228C0-92301		PIPE	ﾊﾟｲﾌﾟ	1	
17	01186-10016		BOLT	ﾎﾞﾙﾄ	1	
18	24310-92571		ELBOW	ｴﾙﾎﾞ	1	
19	03320-00240		O-RING	Oﾘﾝｸﾞ	1	
20	24328-40070		HOSE VFHM360	ﾎｰｽ	1	
-	24328-40080		HOSE VFHM400	ﾎｰｽ	1	
-	24328-40095		HOSE VFHM435	ﾎｰｽ	1	
-	24328-40110		HOSE VFHM480	ﾎｰｽ	1	
-	24328-40120		HOSE VFHM500	ﾎｰｽ	1	
-	24328-40130		HOSE VFHM540	ﾎｰｽ	1	
-	24328-40135		HOSE VFHM550	ﾎｰｽ	1	
-	24328-40155		HOSE VFHM600	ﾎｰｽ	1	
-	24328-40175		HOSE VFHM650	ﾎｰｽ	1	
-	24328-40190		HOSE VFHM700	ﾎｰｽ	1	
-	24328-40215		HOSE VFHM750	ﾎｰｽ	1	
-	24328-40230		HOSE VFHM800	ﾎｰｽ	1	
21	04911-00022		CLIP	ｸﾘｯﾌﾟ	2	
22	24329-46201		CLIP	ｸﾘｯﾌﾟ	2	
23	23678-42411		BAND	ﾊﾞﾝﾄﾞ	4	
24	53675-54101		BAND	ﾊﾞﾝﾄﾞ	4	

FIG.217 MAST PIPING [VFHM28C]

(M4040880) マストパイピング

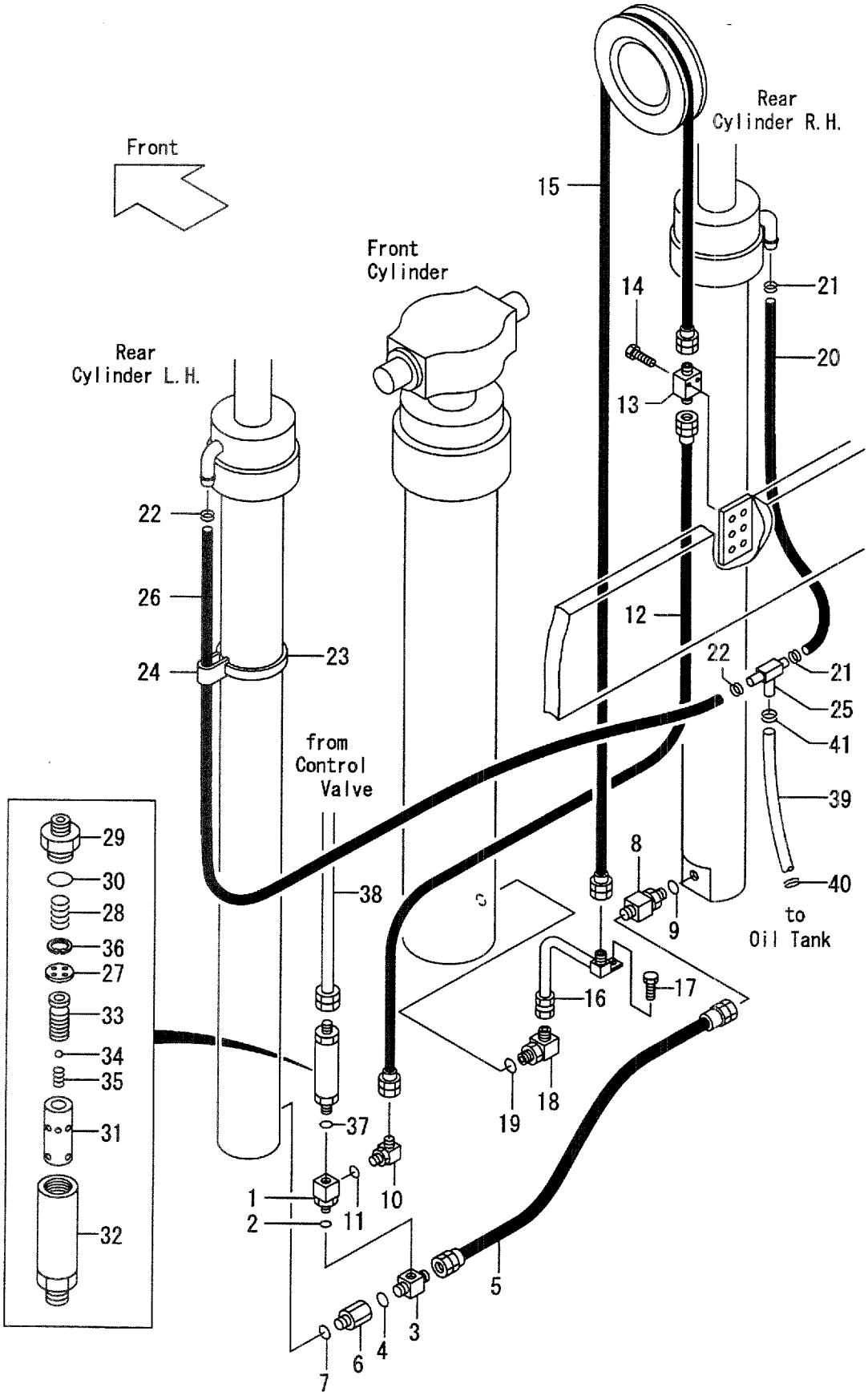

A:VFHM28C(FD45,FG45)

Item No	Part No.	Mark	Description		Req'd	Remarks : Serial No.
25	24329-46052		THREE-WAY	ｽﾘｰｳｴｲ	1	
26	24328-40120		HOSE VFHM360	ﾎｰｽ	1	
-	24328-40130		HOSE VFHM400	ﾎｰｽ	1	
-	24328-40145		HOSE VFHM435	ﾎｰｽ	1	
-	24328-40160		HOSE VFHM480	ﾎｰｽ	1	
-	24328-40170		HOSE VFHM500	ﾎｰｽ	1	
-	24328-40180		HOSE VFHM540	ﾎｰｽ	1	
-	24328-40185		HOSE VFHM550	ﾎｰｽ	1	
-	24328-40205		HOSE VFHM600	ﾎｰｽ	1	
-	24328-40225		HOSE VFHM650	ﾎｰｽ	1	
-	24328-40240		HOSE VFHM700	ﾎｰｽ	1	
-	24328-40265		HOSE VFHM750	ﾎｰｽ	1	
-	24328-40280		HOSE VFHM800	ﾎｰｽ	1	
A5	228C8-41002		REGULATOR-ASSY,FLOW	ﾚｷﾞｭﾚｰﾀｱｯｾﾝ	1	INC.27-36
27	NO PART NO.	#	PLATE	ﾌﾟﾚｰﾄ	1	
28	24609-43631		SPRING	ｽﾌﾟﾘﾝｸﾞ	2	
29	NO PART NO.	#	NIPPLE	ﾆｯﾌﾟﾙ	1	
30	03300-00360		O-RING	Oﾘﾝｸﾞ	1	(OLD PARTS)
-	03320-00360		O-RING	Oﾘﾝｸﾞ	1	(NEW PARTS)
31	NO PART NO.	#	SLEEVE	ｽﾘｰﾌﾞ	1	
32	NO PART NO.	#	CASE	ｹｰｽ	1	
33	NO PART NO.	#	PISTON	ﾋﾟｽﾄﾝ	1	
34	24459-42951		BALL	ﾎﾞｰﾙ	1	
35	214A8-44151		SPRING	ｽﾌﾟﾘﾝｸﾞ	1	
36	02110-00020		RING,SNAP	ｽﾅｯﾌﾟﾘﾝｸﾞ	1	
37	03320-00240		O-RING	Oﾘﾝｸﾞ	1	
38	224T8-02111		HOSE	ﾎｰｽ	1	
39	04710-06113		HOSE	ﾎｰｽ	1	
40	04911-00032		CLIP	ｸﾘｯﾌﾟ	1	
41	24329-46211		CLIP	ｸﾘｯﾌﾟ	1	

FIG.218 FORK & LIFT BRACKET [VFHM35H]

(M4040930) フォーク&リフトブラケット

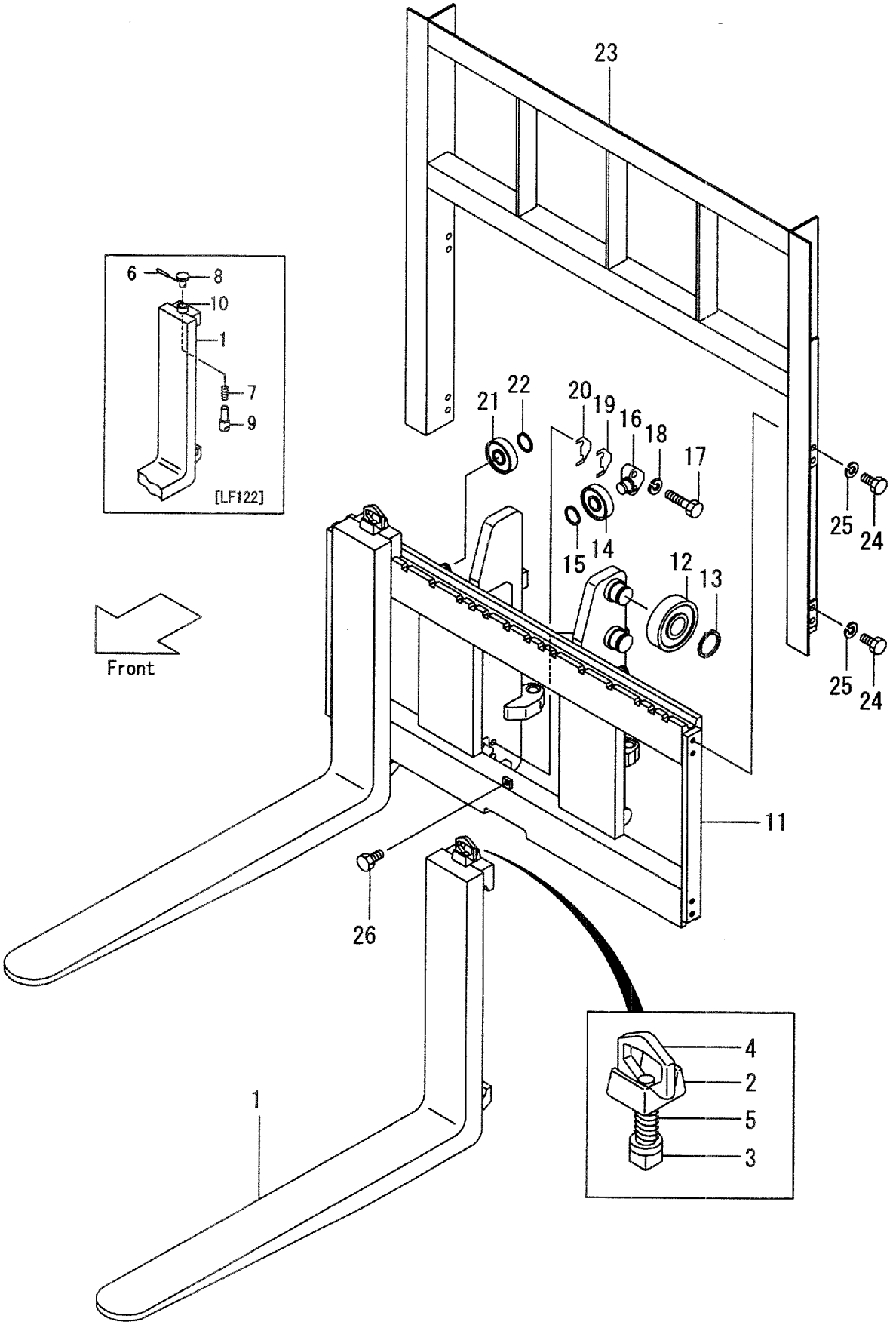

A:VFHM35H(FD50,FG50)

Item No	Part No.	Mark	Description		Req'd	Remarks : Serial No.
1	25788-10304		FORK	ﾌｫｰｸ	2	(L=1220) INC.6-10
-	25788-10304		FORK	ﾌｫｰｸ	2	[LF122] INC.6-10
-	25788-10314		FORK	ﾌｫｰｸ	2	[LF137] INC.2-5
-	25788-10324		FORK	ﾌｫｰｸ	2	[LF152] INC.2-5
-	25788-10334		FORK	ﾌｫｰｸ	2	[LF167] INC.2-5
-	25788-10344		FORK	ﾌｫｰｸ	2	[LF182] INC.2-5
-	25788-10354		FORK	ﾌｫｰｸ	2	[LF197] INC.2-5
-	25788-10364		FORK	ﾌｫｰｸ	2	[LF212] INC.2-5
-	25788-10374		FORK	ﾌｫｰｸ	2	[LF227] INC.2-5
A1	25788-11001		STOPPER-ASSY,FORK	ｽﾄｯﾊﾟｱｯｾﾝ	2	INC.2-5
2	214J8-12011		STOPPER	ｽﾄｯﾊﾟ	2	
3	25788-12301		HEAD	ﾍｯﾄﾞ	2	
4	214J8-12031		SPRING	ｽﾌﾟﾘﾝｸﾞ	2	
5	214A8-12021		HANDLE	ﾊﾝﾄﾞﾙ	2	
A2	25788-12501		STOPPER-ASSY,FORK	ｽﾄｯﾊﾟｱｯｾﾝ	2	INC.6-10
6	25788-12511		PIN	ﾋﾟﾝ	2	
7	25788-12521		SPRING	ｽﾌﾟﾘﾝｸﾞ	2	
8	25788-12531		KNOB	ﾉﾌﾞ	2	
9	25788-12541		PIN	ﾋﾟﾝ	2	
10	25788-12551		SLEEVE	ｽﾘｰﾌﾞ	2	
11	235H0-90001		BRACKET,LIFT	ﾌﾞﾗｹｯﾄ	1	
12	24609-42111		ROLLER,END	ﾛｰﾗ	6	
-	24609-42121		ROLLER,END	ﾛｰﾗ	(4)	(UPPER & LOWER)
13	02100-00045		RING,SNAP	ｽﾅｯﾌﾟﾘﾝｸﾞ	6	
14	22198-22341		ROLLER,END,91.5	ﾛｰﾗ	2	
15	02100-00030		RING,SNAP	ｽﾅｯﾌﾟﾘﾝｸﾞ	2	
16	24609-42131		SHAFT	ｼｬﾌﾄ	2	
17	01103-16065		BOLT	ﾎﾞﾙﾄ	4	
18	02011-00016		WASHER	ﾜｯｼｬ	4	
19	24609-42151		SHIM,T-1.0	ｼﾑ	8	
20	24609-42161		SHIM,T-0.2	ｼﾑ	4	
21	22198-22341		ROLLER,END,91.5	ﾛｰﾗ	2	
-	24258-33401		ROLLER,END,92.0	ﾛｰﾗ	(2)	
22	02100-00030		RING,SNAP	ｽﾅｯﾌﾟﾘﾝｸﾞ	2	
23	235H8-22301		BACKREST	ﾊﾞｯｸﾚｽﾄ	1	
24	01103-14030		BOLT	ﾎﾞﾙﾄ	8	
25	02011-00014		WASHER	ﾜｯｼｬ	8	
26	01184-12025		BOLT	ﾎﾞﾙﾄ	1	

FIG.219 MAST [VFHM35H]

(M4040730) マスト

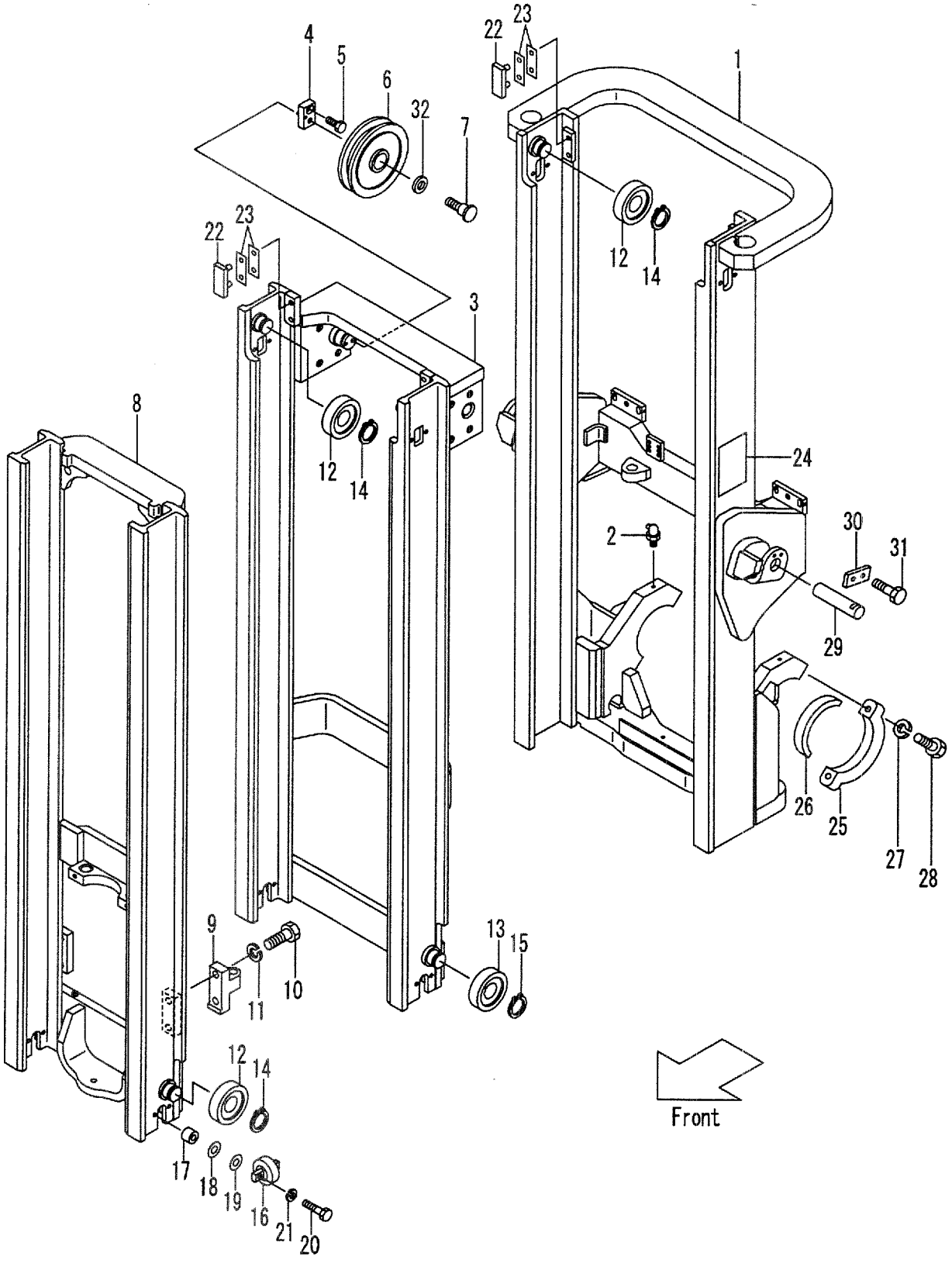

A:VFHM35H(FD50,FG50)

Item No	Part No.	Mark	Description	Req'd	Remarks : Serial No.
1	235H0-70011		MAST,OUTER VFHM360 ｱｳﾀﾏｽﾄ	1	
-	235H0-70021		MAST,OUTER VFHM400 ｱｳﾀﾏｽﾄ	1	
-	235H0-70001		MAST,OUTER VFHM435 ｱｳﾀﾏｽﾄ	1	
-	235H0-70031		MAST,OUTER VFHM480 ｱｳﾀﾏｽﾄ	1	
-	235H0-70041		MAST,OUTER VFHM500 ｱｳﾀﾏｽﾄ	1	
-	235H0-70051		MAST,OUTER VFHM540 ｱｳﾀﾏｽﾄ	1	
-	235H0-70061		MAST,OUTER VFHM550 ｱｳﾀﾏｽﾄ	1	
-	235H0-70071		MAST,OUTER VFHM600 ｱｳﾀﾏｽﾄ	1	
-	235H0-70081		MAST,OUTER VFHM650 ｱｳﾀﾏｽﾄ	1	
-	235H0-70091		MAST,OUTER VFHM700 ｱｳﾀﾏｽﾄ	1	
-	235H0-70101		MAST,OUTER VFHM750 ｱｳﾀﾏｽﾄ	1	
-	235H0-70111		MAST,OUTER VFHM800 ｱｳﾀﾏｽﾄ	1	
-	535H3-91211		MAST,OUTER VFHM360 ｱｳﾀﾏｽﾄ	1	[RW][HC][EXR]
-	535H3-91221		MAST,OUTER VFHM400 ｱｳﾀﾏｽﾄ	1	[RW][HC][EXR]
-	535H3-91201		MAST,OUTER VFHM435 ｱｳﾀﾏｽﾄ	1	[RW][HC][EXR]
-	535H3-91231		MAST,OUTER VFHM480 ｱｳﾀﾏｽﾄ	1	[RW][HC][EXR]
-	535H3-91241		MAST,OUTER VFHM500 ｱｳﾀﾏｽﾄ	1	[RW][HC][EXR]
-	535H3-91251		MAST,OUTER VFHM540 ｱｳﾀﾏｽﾄ	1	[RW][HC][EXR]
-	535H3-91261		MAST,OUTER VFHM550 ｱｳﾀﾏｽﾄ	1	[RW][HC][EXR]
-	535H3-91271		MAST,OUTER VFHM600 ｱｳﾀﾏｽﾄ	1	[RW][HC][EXR]
-	535H3-91281		MAST,OUTER VFHM650 ｱｳﾀﾏｽﾄ	1	[RW][HC][EXR]
-	535H3-91291		MAST,OUTER VFHM700 ｱｳﾀﾏｽﾄ	1	[RW][HC][EXR]
-	535H3-91301		MAST,OUTER VFHM750 ｱｳﾀﾏｽﾄ	1	[RW][HC][EXR]
-	535H3-91311		MAST,OUTER VFHM800 ｱｳﾀﾏｽﾄ	1	[RW][HC][EXR]
2	04901-00160		FITTING ﾌｨｯﾃｨﾝｸﾞ	2	
3	235H0-70211		MAST,MIDDLE VFHM360 ﾐﾄﾞﾙﾏｽﾄ	1	
-	235H0-70221		MAST,MIDDLE VFHM400 ﾐﾄﾞﾙﾏｽﾄ	1	
-	235H0-70201		MAST,MIDDLE VFHM435 ﾐﾄﾞﾙﾏｽﾄ	1	
-	235H0-70231		MAST,MIDDLE VFHM480 ﾐﾄﾞﾙﾏｽﾄ	1	
-	235H0-70241		MAST,MIDDLE VFHM500 ﾐﾄﾞﾙﾏｽﾄ	1	
-	235H0-70251		MAST,MIDDLE VFHM540 ﾐﾄﾞﾙﾏｽﾄ	1	
-	235H0-70261		MAST,MIDDLE VFHM550 ﾐﾄﾞﾙﾏｽﾄ	1	
-	235H0-70271		MAST,MIDDLE VFHM600 ﾐﾄﾞﾙﾏｽﾄ	1	
-	235H0-70281		MAST,MIDDLE VFHM650 ﾐﾄﾞﾙﾏｽﾄ	1	
-	235H0-70291		MAST,MIDDLE VFHM700 ﾐﾄﾞﾙﾏｽﾄ	1	
-	235H0-70301		MAST,MIDDLE VFHM750 ﾐﾄﾞﾙﾏｽﾄ	1	
-	235H0-70311		MAST,MIDDLE VFHM800 ﾐﾄﾞﾙﾏｽﾄ	1	
4	224T0-73031		BRACKET ﾌﾞﾗｹｯﾄ	1	
5	01183-12030		BOLT ﾎﾞﾙﾄ	1	
6	22430-92201		PULLEY ﾌﾟｰﾘ	1	MAST NO.1-2
-	22430-92202		PULLEY ﾌﾟｰﾘ	1	MAST NO.3-
7	22430-92211		BOLT ﾎﾞﾙﾄ	1	MAST NO.1-2
-	22430-92212		BOLT ﾎﾞﾙﾄ	1	MAST NO.3-
8	235H0-70411		MAST,INNER VFHM360 ｲﾝﾅﾏｽﾄ	1	
-	235H0-70421		MAST,INNER VFHM400 ｲﾝﾅﾏｽﾄ	1	
-	235H0-70401		MAST,INNER VFHM435 ｲﾝﾅﾏｽﾄ	1	
-	235H0-70431		MAST,INNER VFHM480 ｲﾝﾅﾏｽﾄ	1	
-	235H0-70441		MAST,INNER VFHM500 ｲﾝﾅﾏｽﾄ	1	
-	235H0-70451		MAST,INNER VFHM540 ｲﾝﾅﾏｽﾄ	1	
-	235H0-70461		MAST,INNER VFHM550 ｲﾝﾅﾏｽﾄ	1	

FIG.219 MAST [VFHM35H]

(M4040730) マスト

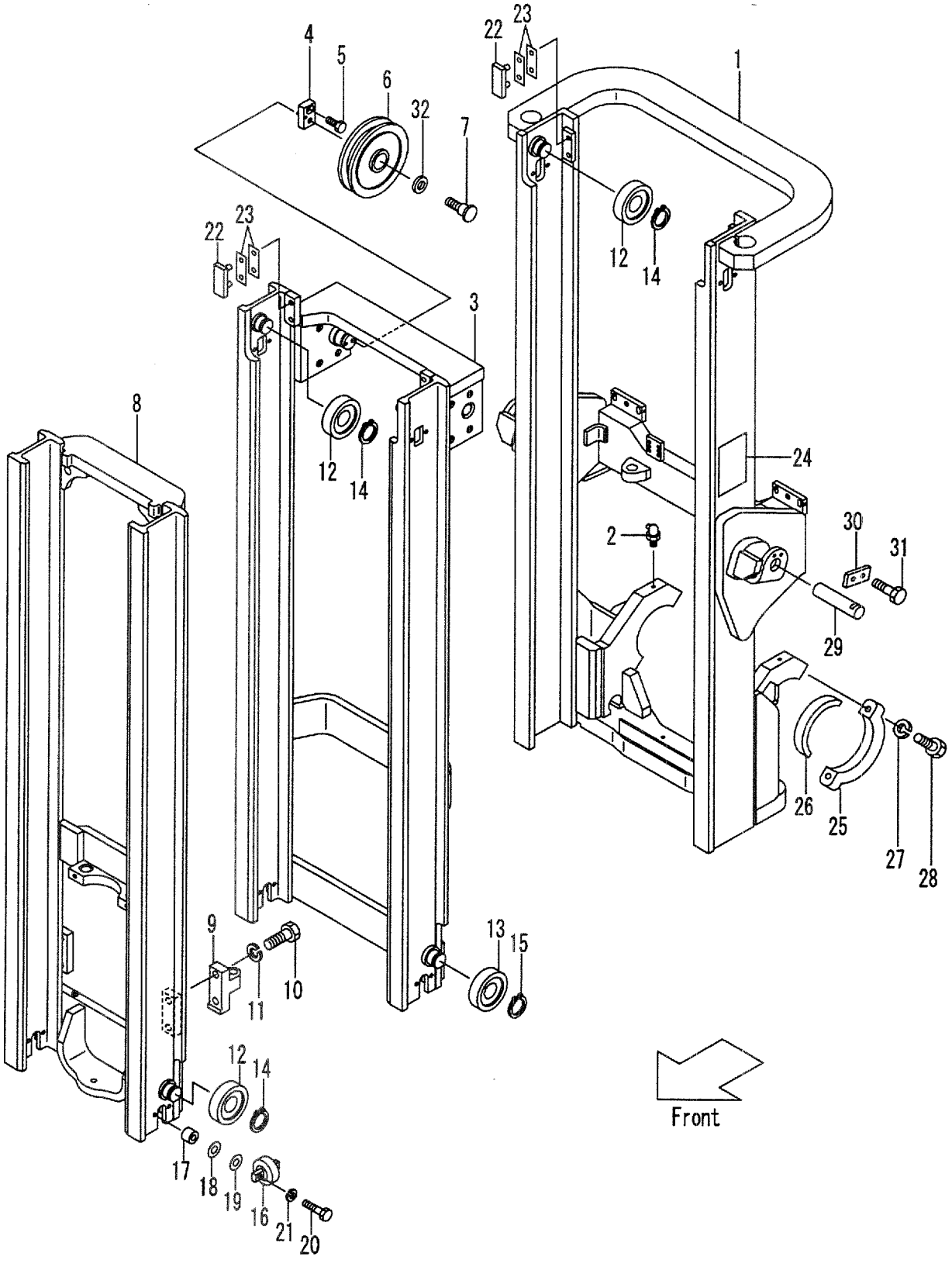

A:VFHM35H(FD50,FG50)

Item No	Part No.	Mark	Description		Req'd	Remarks : Serial No.
-	235H0-70471		MAST,INNER VFHM600	ｲﾝﾅﾏｽﾄ	1	
-	235H0-70481		MAST,INNER VFHM650	ｲﾝﾅﾏｽﾄ	1	
-	235H0-70491		MAST,INNER VFHM700	ｲﾝﾅﾏｽﾄ	1	
-	235H0-70501		MAST,INNER VFHM750	ｲﾝﾅﾏｽﾄ	1	
-	235H0-70511		MAST,INNER VFHM800	ｲﾝﾅﾏｽﾄ	1	
9	224T0-73121		BRACKET	ﾌﾞﾗｹｯﾄ	2	
10	01103-20055		BOLT	ﾎﾞﾙﾄ	4	
11	02011-00020		WASHER	ﾜｯｼｬ	4	
12	24609-42111		ROLLER,END,123.5	ﾛｰﾗ	6	
-	24609-42121		ROLLER,END,124.0	ﾛｰﾗ	(6)	
13	23818-20701		ROLLER,END,143.5	ﾛｰﾗ	2	
-	23958-22081		ROLLER,END,144.0	ﾛｰﾗ	(2)	
14	02100-00045		RING,SNAP	ｽﾅｯﾌﾟﾘﾝｸﾞ	6	
15	02100-00050		RING,SNAP	ｽﾅｯﾌﾟﾘﾝｸﾞ	2	
16	23458-32051		ROLLER,SIDE	ﾛｰﾗ	8	MAST NO.1-43
-	23458-32052		ROLLER,SIDE	ﾛｰﾗ	8	MAST NO.44-
17	23818-30071		SPACER	ｽﾍﾟｰｻ	16	
18	22548-34051		SHIM,T-0.5	ｼﾑ	16	
19	22548-34061		SHIM,T-1.0	ｼﾑ	32	
20	01100-12040		BOLT	ﾎﾞﾙﾄ	16	MAST NO.1-43
-	01184-12045		BOLT	ﾎﾞﾙﾄ	16	MAST NO.44-
21	02010-00012		WASHER	ﾜｯｼｬ	16	
22	22678-32001		SLIPPER,T-4	ｽﾘｯﾊﾟ	4	
-	23460-72501		SLIPPER,T-6	ｽﾘｯﾊﾟ	(4)	
23	22679-43231		SHIM	ｼﾑ	28	
24	23678-06002		PLATE,NAME	ﾌﾟﾚｰﾄ	1	
25	224T8-02201		CAP	ｷｬｯﾌﾟ	2	
26	224T8-02001		BUSHING	ﾌﾞｯｼﾝｸﾞ	2	
27	01103-20085		BOLT	ﾎﾞﾙﾄ	4	
28	02010-00020		WASHER	ﾜｯｼｬ	4	
29	224T8-52501		PIN	ﾋﾟﾝ	2	
30	23648-50161		PLATE	ﾌﾟﾚｰﾄ	2	
31	01184-10020		BOLT	ﾎﾞﾙﾄ	4	
32	02000-00020		WASHER	ﾜｯｼｬ	1	MAST NO.3-

FIG.220 LAMP GUARD [(HL,BKH)/VFHM35H]

(M4040740) ﾗﾝﾌﾟｶﾞｰﾄﾞ

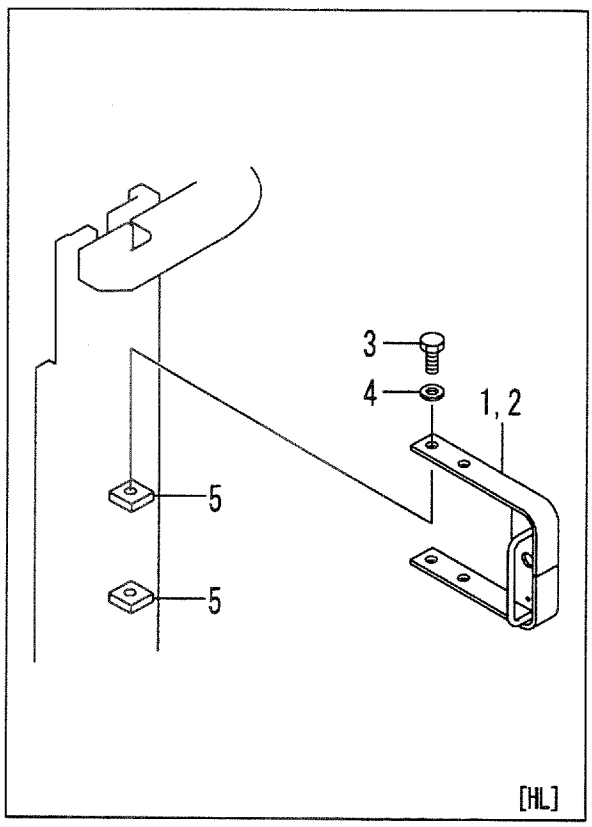

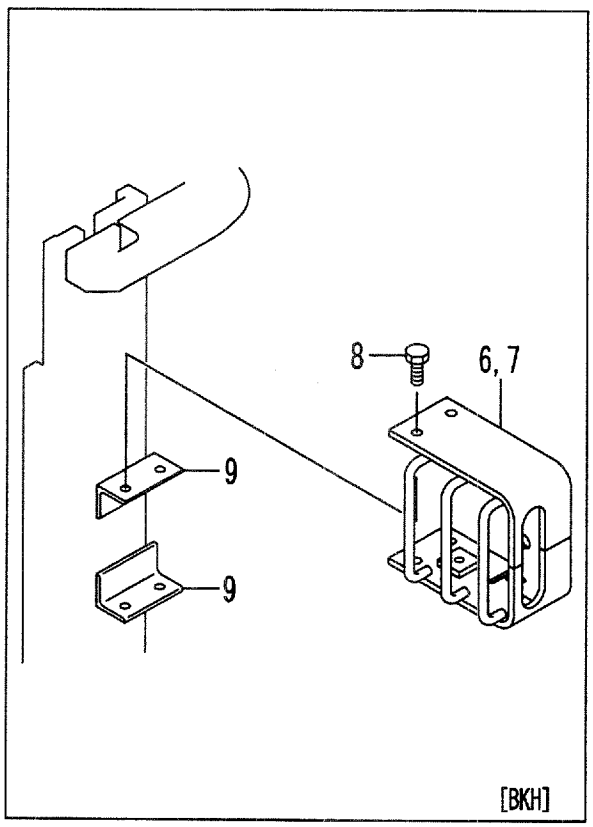

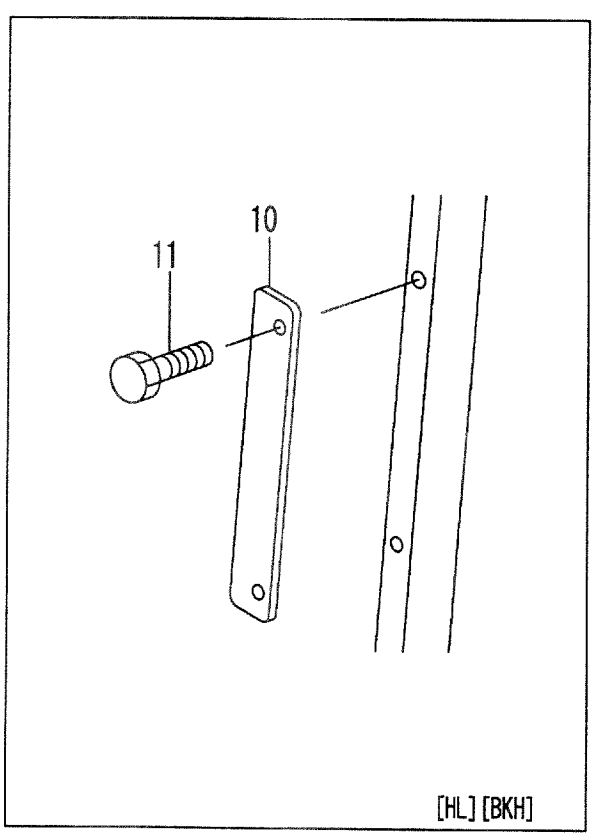

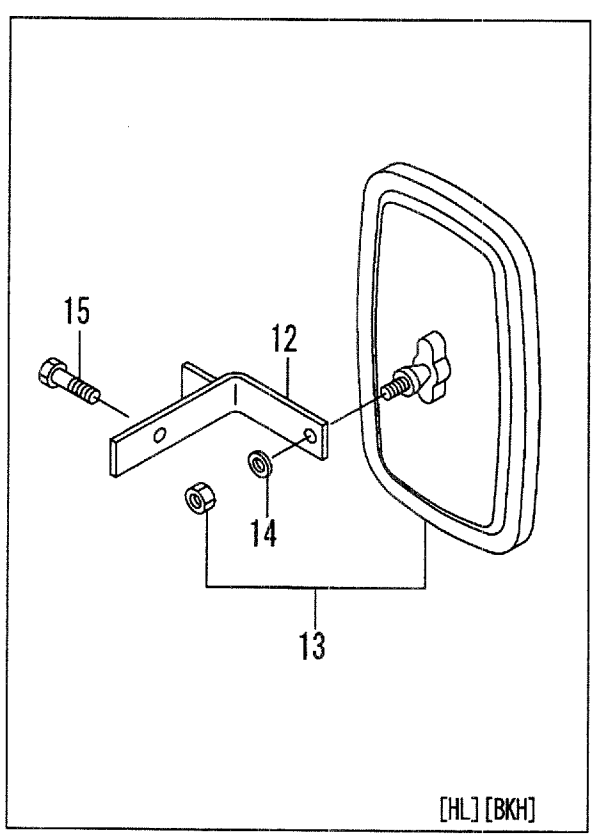

A:VFHM35H(FD50, FG50)

Item No	Part No.	Mark	Description		Req'd	Remarks : Serial No.
1	534A9-22011		BRACKET,LH	ﾌﾞﾗｹｯﾄ	1	[HL]
2	534A9-22001		BRACKET,RH	ﾌﾞﾗｹｯﾄ	1	[HL]
3	01100-12020		BOLT	ﾎﾞﾙﾄ	4	[HL]
4	02010-00012		WASHER	ﾜｯｼｬ	4	[HL]
5	534A9-22101		BLOCK,TAPPED	ﾌﾞﾛｯｸ	4	[HL]
6	534A4-22011		GUARD,LH	ｶﾞｰﾄﾞ	1	[BKH]
7	534A4-22001		GUARD,RH	ｶﾞｰﾄﾞ	1	[BKH]
8	01184-12020		BOLT & WASHER	ﾎﾞﾙﾄ&ﾜｯｼｬ	8	[BKH]
9	534A4-22101		BRACKET	ﾌﾞﾗｹｯﾄ	4	[BKH]
10	534A9-22301		PLATE	ﾌﾟﾚｰﾄ	2	[HL][BKH]
11	01100-08012		BOLT	ﾎﾞﾙﾄ	4	[HL][BKH]
12	535C9-22401		BRACKET	ﾌﾞﾗｹｯﾄ	2	[HL][BKH]
13	239A9-92001		MIRROR	ﾐﾗｰ	2	[HL][BKH]
14	222A9-32011		WASHER	ﾜｯｼｬ	2	[HL][BKH]
15	514A5-12021		BOLT	ﾎﾞﾙﾄ	2	[HL][BKH]
16	535C9-22301	+	WIRE-HARNESS	ﾜｲﾔﾊｰﾈｽ	2	[HL][BKH]
17	27732-42221	+	CLAMP	ｸﾗﾝﾌﾟ	4	[HL][BKH]
18	04913-11380	+	BAND	ﾊﾞﾝﾄﾞ	6	[HL][BKH]

FIG.221 LIFT CYLINDER (FRONT)[VFHM35H]

(M4040830) リフトシリンダ

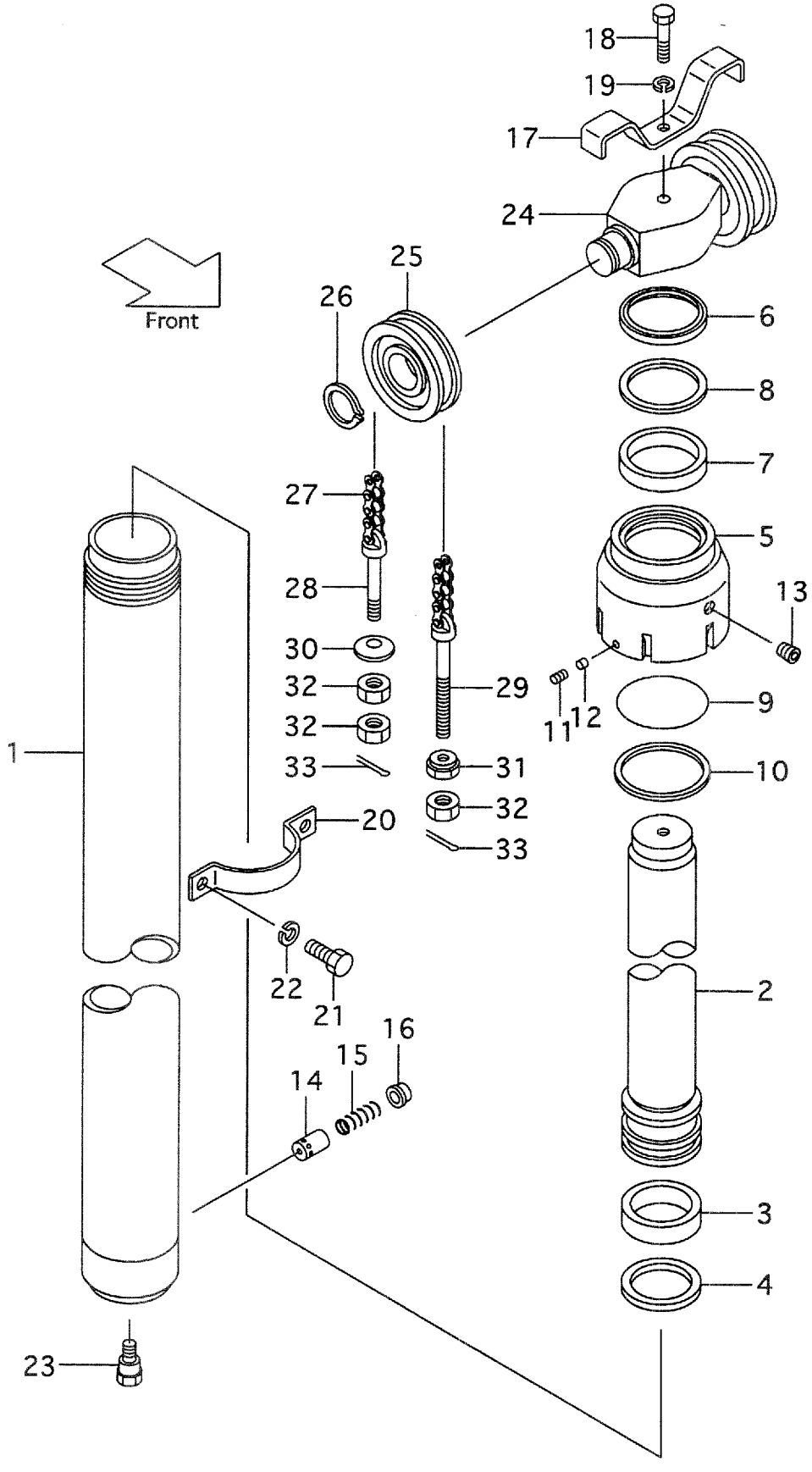

A:VFHM35H(FD50,FG50)

Item No	Part No.	Mark	Description	Req'd	Remarks : Serial No.
A1	228C0-80011		CYL-ASSY,LIFT VFHM360 ﾘﾌﾄｼﾘﾝﾀﾞｱｯｾﾝ	1	MAST NO.1-32 INC.1-16
-	228C0-80012		CYL-ASSY,LIFT VFHM360 ﾘﾌﾄｼﾘﾝﾀﾞｱｯｾﾝ	1	MAST NO.33- INC.1-16
-	228C0-80021		CYL-ASSY,LIFT VFHM400 ﾘﾌﾄｼﾘﾝﾀﾞｱｯｾﾝ	1	MAST NO.1-32 INC.1-16
-	228C0-80022		CYL-ASSY,LIFT VFHM400 ﾘﾌﾄｼﾘﾝﾀﾞｱｯｾﾝ	1	MAST NO.33- INC.1-16
-	228C0-80001		CYL-ASSY,LIFT VFHM435 ﾘﾌﾄｼﾘﾝﾀﾞｱｯｾﾝ	1	MAST NO.1-32 INC.1-16
-	228C0-80002		CYL-ASSY,LIFT VFHM435 ﾘﾌﾄｼﾘﾝﾀﾞｱｯｾﾝ	1	MAST NO.33- INC.1-16
-	228C0-80031		CYL-ASSY,LIFT VFHM480 ﾘﾌﾄｼﾘﾝﾀﾞｱｯｾﾝ	1	MAST NO.1-32 INC.1-16
-	228C0-80032		CYL-ASSY,LIFT VFHM480 ﾘﾌﾄｼﾘﾝﾀﾞｱｯｾﾝ	1	MAST NO.33- INC.1-16
-	228C0-80041		CYL-ASSY,LIFT VFHM500 ﾘﾌﾄｼﾘﾝﾀﾞｱｯｾﾝ	1	MAST NO.1-32 INC.1-16
-	228C0-80042		CYL-ASSY,LIFT VFHM500 ﾘﾌﾄｼﾘﾝﾀﾞｱｯｾﾝ	1	MAST NO.33- INC.1-16
-	228C0-80051		CYL-ASSY,LIFT VFHM540 ﾘﾌﾄｼﾘﾝﾀﾞｱｯｾﾝ	1	MAST NO.1-32 INC.1-16
-	228C0-80052		CYL-ASSY,LIFT VFHM540 ﾘﾌﾄｼﾘﾝﾀﾞｱｯｾﾝ	1	MAST NO.33- INC.1-16
-	228C0-80061		CYL-ASSY,LIFT VFHM550 ﾘﾌﾄｼﾘﾝﾀﾞｱｯｾﾝ	1	MAST NO.1-32 INC.1-16
-	228C0-80062		CYL-ASSY,LIFT VFHM550 ﾘﾌﾄｼﾘﾝﾀﾞｱｯｾﾝ	1	MAST NO.33- INC.1-16
-	228C0-80071		CYL-ASSY,LIFT VFHM600 ﾘﾌﾄｼﾘﾝﾀﾞｱｯｾﾝ	1	MAST NO.1-32 INC.1-16
-	228C0-80072		CYL-ASSY,LIFT VFHM600 ﾘﾌﾄｼﾘﾝﾀﾞｱｯｾﾝ	1	MAST NO.33- INC.1-16
-	228C0-80081		CYL-ASSY,LIFT VFHM650 ﾘﾌﾄｼﾘﾝﾀﾞｱｯｾﾝ	1	MAST NO.1-32 INC.1-16
-	228C0-80082		CYL-ASSY,LIFT VFHM650 ﾘﾌﾄｼﾘﾝﾀﾞｱｯｾﾝ	1	MAST NO.33- INC.1-16
-	228C0-80091		CYL-ASSY,LIFT VFHM700 ﾘﾌﾄｼﾘﾝﾀﾞｱｯｾﾝ	1	MAST NO.1-32 INC.1-16
-	228C0-80092		CYL-ASSY,LIFT VFHM700 ﾘﾌﾄｼﾘﾝﾀﾞｱｯｾﾝ	1	MAST NO.33- INC.1-16
-	228C0-80101		CYL-ASSY,LIFT VFHM750 ﾘﾌﾄｼﾘﾝﾀﾞｱｯｾﾝ	1	MAST NO.1-32 INC.1-16
-	228C0-80102		CYL-ASSY,LIFT VFHM750 ﾘﾌﾄｼﾘﾝﾀﾞｱｯｾﾝ	1	MAST NO.33- INC.1-16
-	228C0-80111		CYL-ASSY,LIFT VFHM800 ﾘﾌﾄｼﾘﾝﾀﾞｱｯｾﾝ	1	MAST NO.1-32 INC.1-16
-	228C0-80112		CYL-ASSY,LIFT VFHM800 ﾘﾌﾄｼﾘﾝﾀﾞｱｯｾﾝ	1	MAST NO.33- INC.1-16
1	228C0-80211		TUBE VFHM360 ﾁｭｰﾌﾞ	1	
-	228C0-80221		TUBE VFHM400 ﾁｭｰﾌﾞ	1	

FIG.221 LIFT CYLINDER (FRONT)[VFHM35H]

(M4040830) リフトシリンダ

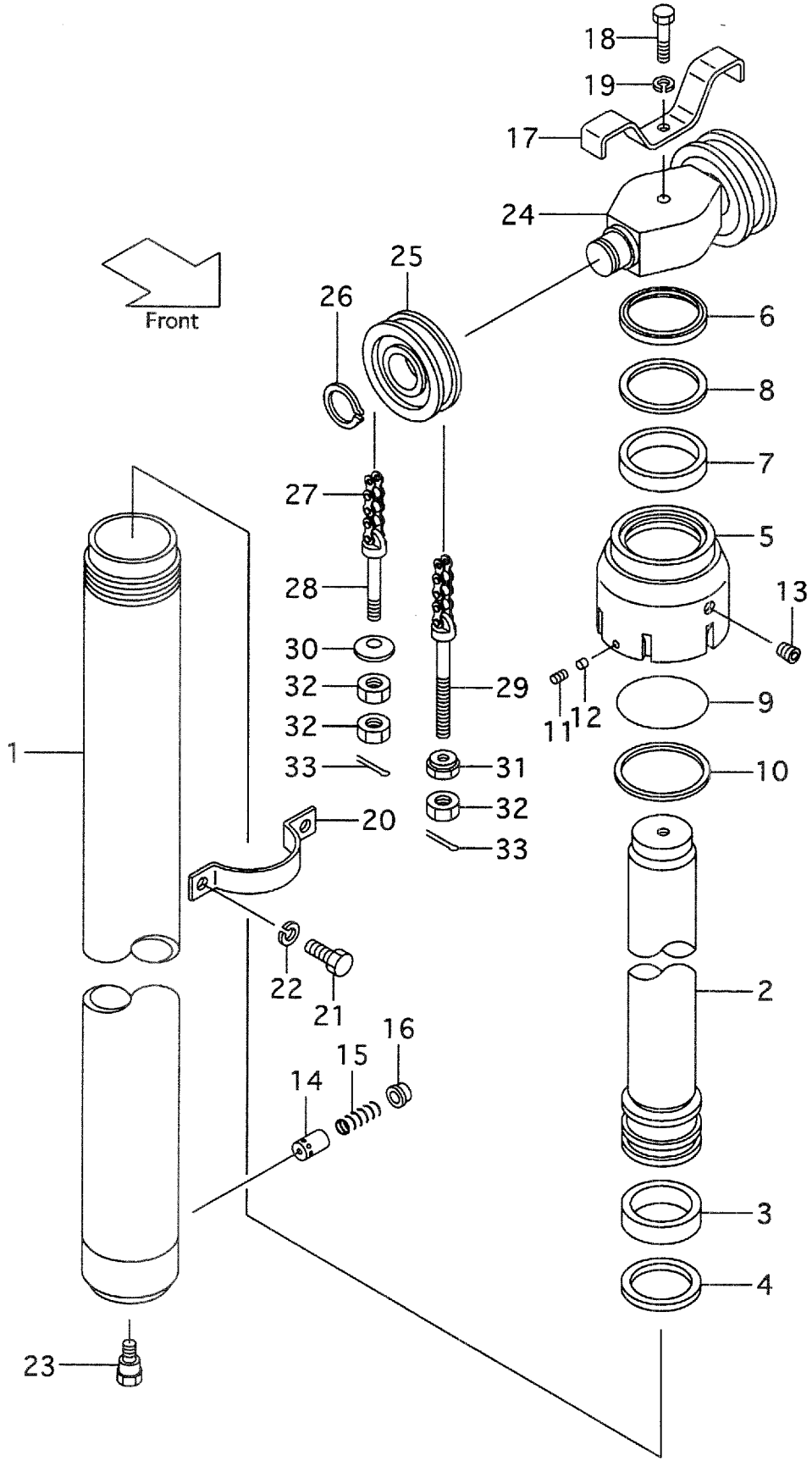

A:VFHM35H(FD50,FG50)

Item No	Part No.	Mark	Description		Req'd	Remarks : Serial No.
-	228C0-80201		TUBE VFHM435	ﾁｭｰﾌﾞ	1	
-	228C0-80231		TUBE VFHM480	ﾁｭｰﾌﾞ	1	
-	228C0-80241		TUBE VFHM500	ﾁｭｰﾌﾞ	1	
-	228C0-80251		TUBE VFHM540	ﾁｭｰﾌﾞ	1	
-	228C0-80261		TUBE VFHM550	ﾁｭｰﾌﾞ	1	
-	228C0-80271		TUBE VFHM600	ﾁｭｰﾌﾞ	1	
-	228C0-80281		TUBE VFHM650	ﾁｭｰﾌﾞ	1	
-	228C0-80291		TUBE VFHM700	ﾁｭｰﾌﾞ	1	
-	228C0-80301		TUBE VFHM750	ﾁｭｰﾌﾞ	1	
-	228C0-80311		TUBE VFHM800	ﾁｭｰﾌﾞ	1	
2	228C0-80411		ROD,PISTON VFHM360	ﾛｯﾄﾞ	1	
-	228C0-80421		ROD,PISTON VFHM400	ﾛｯﾄﾞ	1	
-	228C0-80401		ROD,PISTON VFHM435	ﾛｯﾄﾞ	1	
-	228C0-80431		ROD,PISTON VFHM480	ﾛｯﾄﾞ	1	
-	228C0-80441		ROD,PISTON VFHM500	ﾛｯﾄﾞ	1	
-	228C0-80451		ROD,PISTON VFHM540	ﾛｯﾄﾞ	1	
-	228C0-80461		ROD,PISTON VFHM550	ﾛｯﾄﾞ	1	
-	228C0-80471		ROD,PISTON VFHM600	ﾛｯﾄﾞ	1	
-	228C0-80481		ROD,PISTON VFHM650	ﾛｯﾄﾞ	1	
-	228C0-80491		ROD,PISTON VFHM700	ﾛｯﾄﾞ	1	
-	228C0-80501		ROD,PISTON VFHM750	ﾛｯﾄﾞ	1	
-	228C0-80511		ROD,PISTON VFHM800	ﾛｯﾄﾞ	1	
3	228C0-82431	*	WEARING	ｳｴｱﾘﾝｸﾞ	1	
4	228C0-82441	*	SEAL	ｼｰﾙ	1	
5	228C0-82501		CAP	ｷｬｯﾌﾟ	1	
6	228C0-82531	*	SEAL	ｼｰﾙ	1	
7	228C0-82511	*	PACKING	ﾊﾟｯｷﾝｸﾞ	1	
8	228C0-82521	*	RING	ﾘﾝｸﾞ	1	
9	03350-01400	*	O-RING	Oﾘﾝｸﾞ	1	
10	228C0-82541	*	RING	ﾘﾝｸﾞ	1	
11	25908-44101		PLUG	ﾌﾟﾗｸﾞ	1	
12	25908-44111		PLUG,NYLON	ﾌﾟﾗｸﾞ	1	
13	22518-40151		PLUG	ﾌﾟﾗｸﾞ	1	
14	24389-46011		PISTON	ﾋﾟｽﾄﾝ	1	
15	24389-46021		SPRING	ｽﾌﾟﾘﾝｸﾞ	1	MAST NO.1-32
-	224T0-53451		SPRING	ｽﾌﾟﾘﾝｸﾞ	1	MAST NO.33-
16	24310-82641		RETAINER	ﾘﾃｰﾅ	1	
17	24310-82291		STOPPER	ｽﾄｯﾊﾟ	1	
18	01103-16070		BOLT	ﾎﾞﾙﾄ	1	
19	02011-00016		WASHER	ﾜｯｼｬ	1	
20	228C0-82421		SUPPORT	ｻﾎﾟｰﾄ	1	
21	01103-12025		BOLT	ﾎﾞﾙﾄ	2	
22	02011-00012		WASHER	ﾜｯｼｬ	2	
23	224T0-82561		BOLT	ﾎﾞﾙﾄ	1	
A2	24310-80271		HEAD-ASSY,PISTON	ﾋﾟｽﾄﾝﾍｯﾄﾞｱｯｾﾝ	1	INC.24-26
24	24310-82281		HEAD,PISTON	ﾍｯﾄﾞ	1	
25	24609-41241		SHEAVE	ｼｰﾌﾞ	2	
26	02100-00050		RING,SNAP	ｽﾅｯﾌﾟﾘﾝｸﾞ	2	
27	23918-45531		CHAIN,LEAF VFHM360	ﾁｪｰﾝ	2	
-	23918-45551		CHAIN,LEAF VFHM400	ﾁｪｰﾝ	2	

FIG.221 LIFT CYLINDER (FRONT)[VFHM35H]

(M4040830) リフトシリンダ

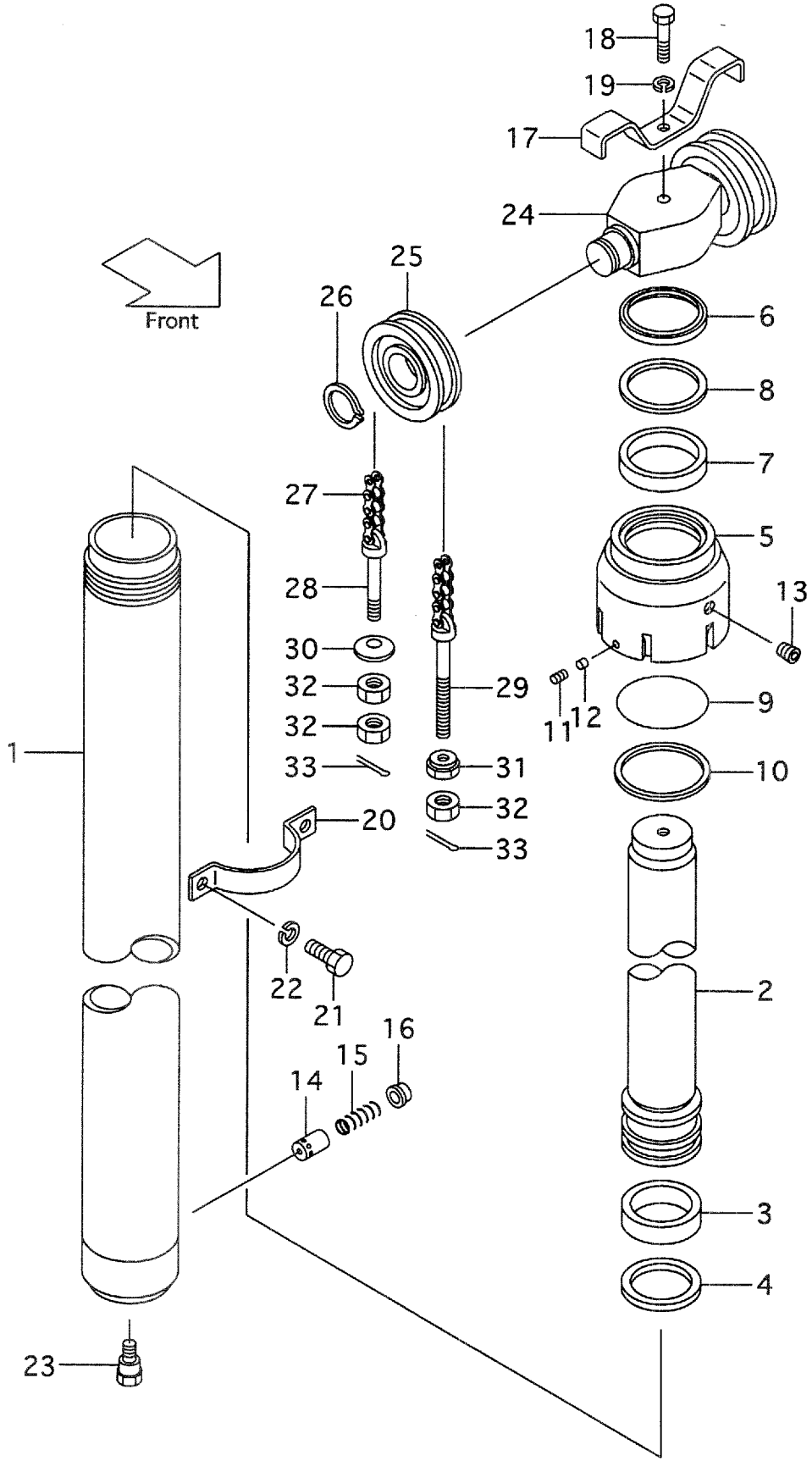

A:VFHM35H(FD50,FG50)

Item No	Part No.	Mark	Description	Req'd	Remarks : Serial No.
-	23918-45571		CHAIN,LEAF VFHM435 チェーン	2	
-	23918-45611		CHAIN,LEAF VFHM480 チェーン	2	
-	23918-45651		CHAIN,LEAF VFHM500 チェーン	2	
-	23918-45691		CHAIN,LEAF VFHM540 チェーン	2	
-	23918-45711		CHAIN,LEAF VFHM550 チェーン	2	
-	23918-45791		CHAIN,LEAF VFHM600 チェーン	2	
-	23918-45871		CHAIN,LEAF VFHM650 チェーン	2	
-	23918-45931		CHAIN,LEAF VFHM700 チェーン	2	
-	23918-46011		CHAIN,LEAF VFHM750 チェーン	2	
-	23918-46091		CHAIN,LEAF VFHM800 チェーン	2	
28	24329-45441		PIN ピン	2	
29	23918-42681		PIN ピン	2	
30	24319-45751		CONE コーン	2	
31	23818-30271		NUT ナット	2	
32	01402-00022		NUT ナット	6	
33	02200-03040		PIN,COTTER ピン	4	
K1	228C0-59801		KIT,OVERHAUL オーバホールキット	1	INC.3,4,6-10

FIG.222 LIFT CYLINDER (REAR)[VFHM35H]

(M4040860) リフトシリンダ

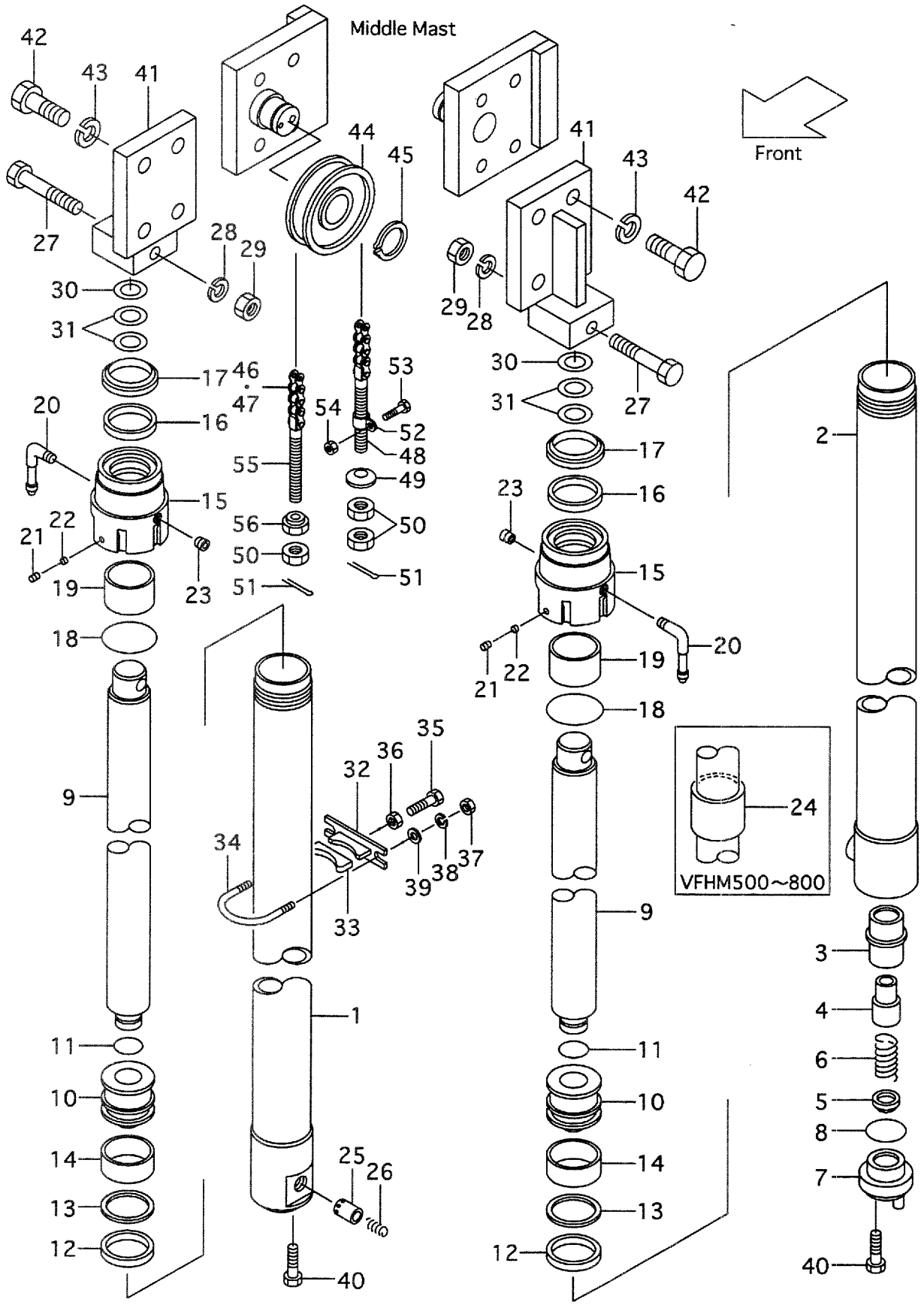

A:VFHM35H(FD50,FG50)

Item No	Part No.	Mark	Description	Req'd	Remarks : Serial No.
A1	228C0-81011		CYL-ASSY,LIFT,RH VFHM360 リフトシリンダアッセン	1	INC.1-23
-	228C0-81021		CYL-ASSY,LIFT,RH VFHM400 リフトシリンダアッセン	1	INC.1-23
-	228C0-81001		CYL-ASSY,LIFT,RH VFHM435 リフトシリンダアッセン	1	INC.1-23
-	228C0-81031		CYL-ASSY,LIFT,RH VFHM480 リフトシリンダアッセン	1	INC.1-23
-	228C0-81041		CYL-ASSY,LIFT,RH VFHM500 リフトシリンダアッセン	1	INC.1-23
-	228C0-81051		CYL-ASSY,LIFT,RH VFHM540 リフトシリンダアッセン	1	INC.1-23
-	228C0-81061		CYL-ASSY,LIFT,RH VFHM550 リフトシリンダアッセン	1	INC.1-23
-	228C0-81071		CYL-ASSY,LIFT,RH VFHM600 リフトシリンダアッセン	1	INC.1-23
-	228C0-81081		CYL-ASSY,LIFT,RH VFHM650 リフトシリンダアッセン	1	INC.1-23
-	228C0-81091		CYL-ASSY,LIFT,RH VFHM700 リフトシリンダアッセン	1	INC.1-23
-	228C0-81101		CYL-ASSY,LIFT,RH VFHM750 リフトシリンダアッセン	1	INC.1-23
-	228C0-81111		CYL-ASSY,LIFT,RH VFHM800 リフトシリンダアッセン	1	INC.1-23
-	228C0-81211		CYL-ASSY,LIFT,LH VFHM360 リフトシリンダアッセン	1	INC.2-23
-	228C0-81221		CYL-ASSY,LIFT,LH VFHM400 リフトシリンダアッセン	1	INC.2-23
-	228C0-81201		CYL-ASSY,LIFT,LH VFHM435 リフトシリンダアッセン	1	INC.2-23
-	228C0-81231		CYL-ASSY,LIFT,LH VFHM480 リフトシリンダアッセン	1	INC.2-23
-	228C0-81241		CYL-ASSY,LIFT,LH VFHM500 リフトシリンダアッセン	1	INC.2-23
-	228C0-81251		CYL-ASSY,LIFT,LH VFHM540 リフトシリンダアッセン	1	INC.2-23
-	228C0-81261		CYL-ASSY,LIFT,LH VFHM550 リフトシリンダアッセン	1	INC.2-23
-	228C0-81271		CYL-ASSY,LIFT,LH VFHM600 リフトシリンダアッセン	1	INC.2-23
-	228C0-81281		CYL-ASSY,LIFT,LH VFHM650 リフトシリンダアッセン	1	INC.2-23
-	228C0-81291		CYL-ASSY,LIFT,LH VFHM700 リフトシリンダアッセン	1	INC.2-23
-	228C0-81301		CYL-ASSY,LIFT,LH VFHM750 リフトシリンダアッセン	1	INC.2-23
-	228C0-81311		CYL-ASSY,LIFT,LH VFHM800 リフトシリンダアッセン	1	INC.2-23
1	228C0-81411		TUBE,RH VFHM360 チューブ	1	
-	228C0-81421		TUBE,RH VFHM400 チューブ	1	

FIG.222 LIFT CYLINDER (REAR)[VFHM35H]

(M4040860) リフトシリンダ

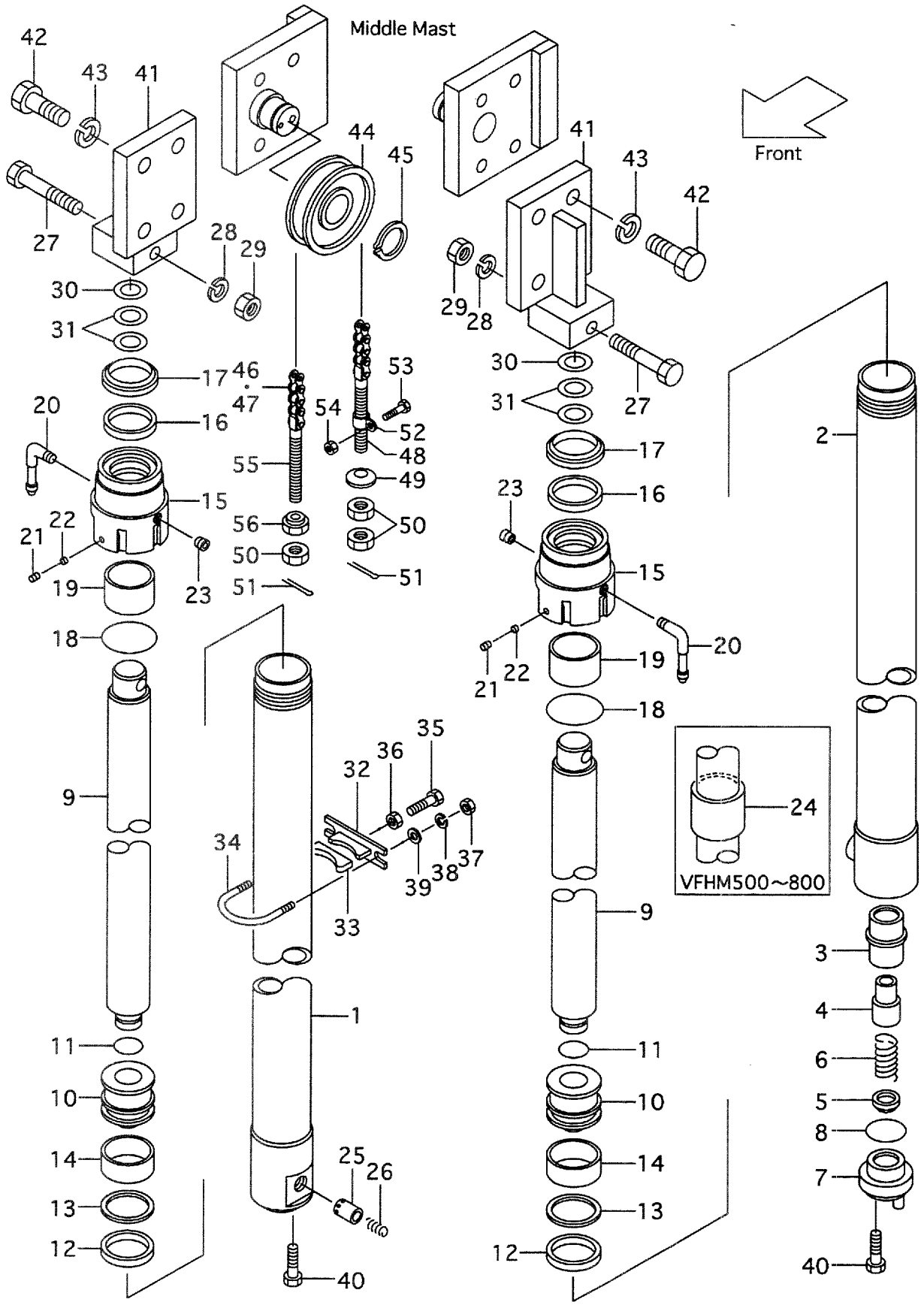

A:VFHM35H(FD50,FG50)

Item No	Part No.	Mark	Description		Req'd	Remarks : Serial No.
-	228C0-81401		TUBE,RH VFHM435	ﾁｭｰﾌﾞ	1	
-	228C0-81431		TUBE,RH VFHM480	ﾁｭｰﾌﾞ	1	
-	228C0-81441		TUBE,RH VFHM500	ﾁｭｰﾌﾞ	1	
-	228C0-81451		TUBE,RH VFHM540	ﾁｭｰﾌﾞ	1	
-	228C0-81461		TUBE,RH VFHM550	ﾁｭｰﾌﾞ	1	
-	228C0-81471		TUBE,RH VFHM600	ﾁｭｰﾌﾞ	1	
-	228C0-81481		TUBE,RH VFHM650	ﾁｭｰﾌﾞ	1	
-	228C0-81491		TUBE,RH VFHM700	ﾁｭｰﾌﾞ	1	
-	228C0-81501		TUBE,RH VFHM750	ﾁｭｰﾌﾞ	1	
-	228C0-81511		TUBE,RH VFHM800	ﾁｭｰﾌﾞ	1	
2	228C0-81611		TUBE,LH VFHM360	ﾁｭｰﾌﾞ	1	
-	228C0-81621		TUBE,LH VFHM400	ﾁｭｰﾌﾞ	1	
-	228C0-81601		TUBE,LH VFHM435	ﾁｭｰﾌﾞ	1	
-	228C0-81631		TUBE,LH VFHM480	ﾁｭｰﾌﾞ	1	
-	228C0-81641		TUBE,LH VFHM500	ﾁｭｰﾌﾞ	1	
-	228C0-81651		TUBE,LH VFHM540	ﾁｭｰﾌﾞ	1	
-	228C0-81661		TUBE,LH VFHM550	ﾁｭｰﾌﾞ	1	
-	228C0-81671		TUBE,LH VFHM600	ﾁｭｰﾌﾞ	1	
-	228C0-81681		TUBE,LH VFHM650	ﾁｭｰﾌﾞ	1	
-	228C0-81691		TUBE,LH VFHM700	ﾁｭｰﾌﾞ	1	
-	228C0-81701		TUBE,LH VFHM750	ﾁｭｰﾌﾞ	1	
-	228C0-81711		TUBE,LH VFHM800	ﾁｭｰﾌﾞ	1	
3	25790-83322		SLEEVE	ｽﾘｰﾌﾞ	1	(LH)
4	25790-83311		PISTON	ﾋﾟｽﾄﾝ	1	(LH)
5	25790-83341		CHECK	ﾁｪｯｸ	1	(LH)
6	25790-83351		SPRING	ｽﾌﾟﾘﾝｸﾞ	1	(LH)
7	228C0-83201		PLUG	ﾌﾟﾗｸﾞ	1	(LH)
8	03320-00400		O-RING	Oﾘﾝｸﾞ	1	(LH)
9	228C0-82811		ROD,PISTON VFHM360	ﾛｯﾄﾞ	2	
-	228C0-82821		ROD,PISTON VFHM400	ﾛｯﾄﾞ	2	
-	228C0-82801		ROD,PISTON VFHM435	ﾛｯﾄﾞ	2	
-	228C0-82831		ROD,PISTON VFHM480	ﾛｯﾄﾞ	2	
-	228C0-82841		ROD,PISTON VFHM500	ﾛｯﾄﾞ	2	
-	228C0-82851		ROD,PISTON VFHM540	ﾛｯﾄﾞ	2	
-	228C0-82861		ROD,PISTON VFHM550	ﾛｯﾄﾞ	2	
-	228C0-82871		ROD,PISTON VFHM600	ﾛｯﾄﾞ	2	
-	228C0-82881		ROD,PISTON VFHM650	ﾛｯﾄﾞ	2	
-	228C0-82891		ROD,PISTON VFHM700	ﾛｯﾄﾞ	2	
-	228C0-82901		ROD,PISTON VFHM750	ﾛｯﾄﾞ	2	
-	228C0-81911		ROD,PISTON VFHM800	ﾛｯﾄﾞ	2	
10	228C8-42501		PISTON	ﾋﾟｽﾄﾝ	2	
11	224T8-42512		RING,SNAP	ｽﾅｯﾌﾟﾘﾝｸﾞ	2	
12	22580-82471	*	PACKING	ﾊﾟｯｷﾝｸﾞ	2	
13	228C8-42541	*	RING,BACK-UP	ﾘﾝｸﾞ	2	
14	22580-82461	*	WEARING	ｳｴｱﾘﾝｸﾞ	2	
15	228C8-42401		CAP	ｷｬｯﾌﾟ	2	
16	224T8-46011	*	PACKING	ﾊﾟｯｷﾝｸﾞ	2	
17	224T8-46001	*	SEAL,DUST	ｼｰﾙ	2	
18	03340-00130	*	O-RING	Oﾘﾝｸﾞ	2	

FIG.222 LIFT CYLINDER (REAR)[VFHM35H]

(M4040860) リフトシリンダ

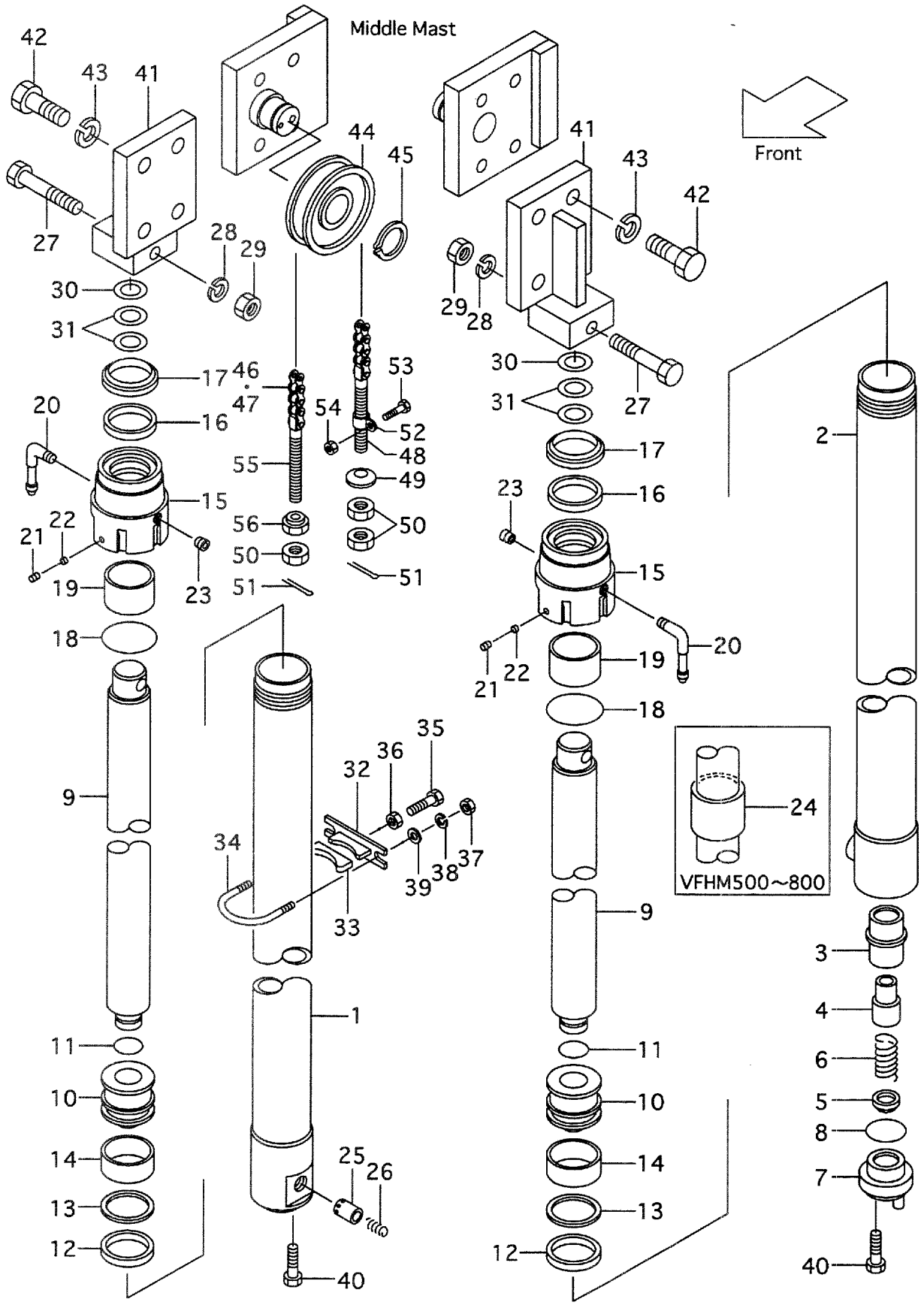

A:VFHM35H(FD50,FG50)

Item No	Part No.	Mark	Description		Req'd	Remarks : Serial No.
19	23460-53171		BUSHING	ﾌﾞｯｼﾝｸﾞ	2	
20	24329-45531		ELBOW	ｴﾙﾎﾞ	2	
21	25908-44101		PLUG	ﾌﾟﾗｸﾞ	2	
22	25908-44111		PLUG,NYLON	ﾌﾟﾗｸﾞ	2	
23	24329-45541		PLUG	ﾌﾟﾗｸﾞ	2	
24	224T8-42471		SPACER VFHM500	ｽﾍﾟｰｻ	2	
-	224T8-83301		SPACER VFHM540	ｽﾍﾟｰｻ	2	
-	224T8-83311		SPACER VFHM550	ｽﾍﾟｰｻ	2	
-	224T8-83321		SPACER VFHM600	ｽﾍﾟｰｻ	2	
-	224T8-83331		SPACER VFHM650	ｽﾍﾟｰｻ	2	
-	224T8-83341		SPACER VFHM700	ｽﾍﾟｰｻ	2	
-	224T8-83351		SPACER VFHM750	ｽﾍﾟｰｻ	2	
-	224T8-83361		SPACER VFHM800	ｽﾍﾟｰｻ	2	
25	228C8-42801		PISTON	ﾋﾟｽﾄﾝ	1	(RH)
26	25908-44281		SPRING	ｽﾌﾟﾘﾝｸﾞ	1	(RH)
27	01100-12090		BOLT	ﾎﾞﾙﾄ	2	
28	02010-00012		WASHER	ﾜｯｼｬ	2	
29	01400-00012		NUT	ﾅｯﾄ	2	
30	23917-42191		SHIM	ｼﾑ	2	
31	23679-43831		SHIM	ｼﾑ	4	
32	224T8-42711		SUPPORT	ｻﾎﾟｰﾄ	2	(VFHM360-550)
-	224T8-42711		SUPPORT	ｻﾎﾟｰﾄ	4	(VFHM600-800)
33	214A8-42631		RUBBER	ﾗﾊﾞｰ	2	(VFHM360-550)
-	214A8-42631		RUBBER	ﾗﾊﾞｰ	4	(VFHM600-800)
34	228C8-42701		U-BOLT	Uﾎﾞﾙﾄ	2	(VFHM360-550)
-	228C8-42701		U-BOLT	Uﾎﾞﾙﾄ	4	(VFHM600-800)
35	01120-16040		BOLT	ﾎﾞﾙﾄ	2	(VFHM360-550)
-	01120-16040		BOLT	ﾎﾞﾙﾄ	4	(VFHM600-800)
36	01402-00016		NUT	ﾅｯﾄ	2	(VFHM360-550)
-	01402-00016		NUT	ﾅｯﾄ	4	(VFHM600-800)
37	01400-00010		NUT	ﾅｯﾄ	4	(VFHM360-550)
-	01400-00010		NUT	ﾅｯﾄ	8	(VFHM600-800)
38	02010-00010		WASHER	ﾜｯｼｬ	4	(VFHM360-550)
-	02010-00010		WASHER	ﾜｯｼｬ	8	(VFHM600-800)
39	02000-00010		WASHER	ﾜｯｼｬ	4	(VFHM360-550)
-	02000-00010		WASHER	ﾜｯｼｬ	8	(VFHM600-800)
40	235H8-40501		BOLT	ﾎﾞﾙﾄ	2	
41	224T0-73301		HEAD,PISTON	ﾍｯﾄﾞ	2	
42	01103-22060		BOLT	ﾎﾞﾙﾄ	8	
43	02011-00022		WASHER	ﾜｯｼｬ	8	
44	24609-41241		SHEAVE	ｼｰﾌﾞ	2	
45	02100-00050		RING,SNAP	ｽﾅｯﾌﾟﾘﾝｸﾞ	2	
46	23918-45871		CHAIN,LEAF VFHM360	ﾁｪｰﾝ	2	INC.47
-	23918-45971		CHAIN,LEAF VFHM400	ﾁｪｰﾝ	2	INC.47
-	23918-46071		CHAIN,LEAF VFHM435	ﾁｪｰﾝ	2	INC.47
-	23918-46191		CHAIN,LEAF VFHM480	ﾁｪｰﾝ	2	INC.47
-	23918-46271		CHAIN,LEAF VFHM500	ﾁｪｰﾝ	2	INC.47
-	23918-46371		CHAIN,LEAF VFHM540	ﾁｪｰﾝ	2	INC.47
-	23918-46391		CHAIN,LEAF VFHM550	ﾁｪｰﾝ	2	

FIG.222 LIFT CYLINDER (REAR)[VFHM35H]

(M4040860) リフトシリンダ

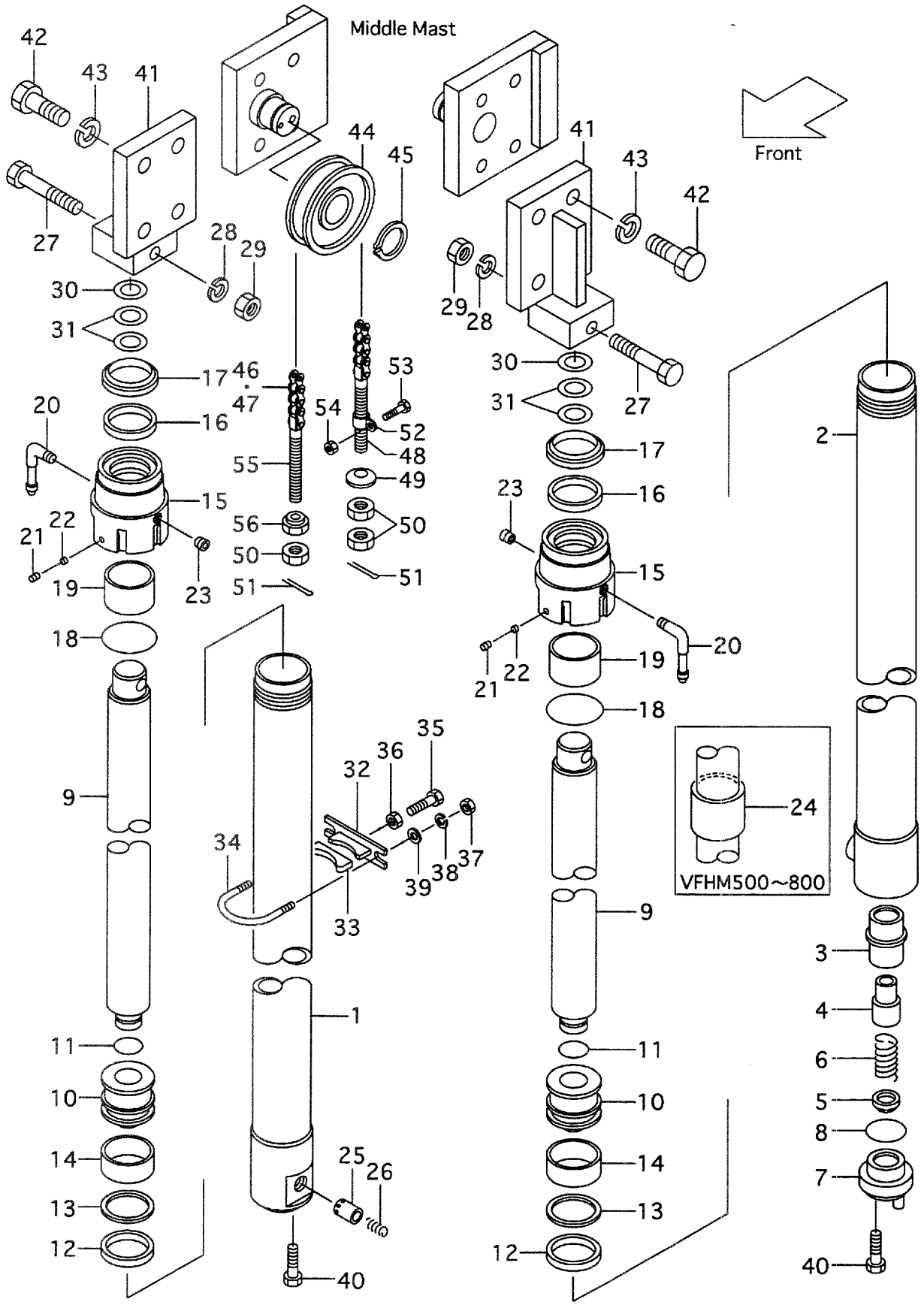

A:VFHM35H(FD50,FG50)

Item No	Part No.	Mark	Description	Req'd	Remarks : Serial No.
-	23918-46391		CHAIN,LEAF VFHM550 チェーン	2	INC.47
-	23918-46131		CHAIN,LEAF VFHM600 チェーン	2	INC.47
-	23918-46211		CHAIN,LEAF VFHM650 チェーン	2	INC.47
-	23918-46271		CHAIN,LEAF VFHM700 チェーン	2	INC.47
-	23918-46351		CHAIN,LEAF VFHM750 チェーン	2	INC.47
-	23918-46431		CHAIN,LEAF VFHM800 チェーン	2	INC.47
47	23958-42921		LINK リンク	2	
48	24329-45441		PIN ピン	2	
49	24319-45751		CONE コーン	2	
50	01402-00022		NUT ナット	6	
51	02200-03040		PIN,COTTER ピン	4	
52	224T8-42621		CLIP クリップ	2	
53	01183-06016		BOLT ボルト	2	
54	01400-00006		NUT ナット	2	
55	23918-42681		PIN ピン	2	
56	23818-30271		NUT ナット	2	
K1	228C8-49803		KIT,OVERHAUL オーバホールキット	2	INC.12-14,16-18

FIG.223 MAST PIPING [VFHM35H]

(M4040890) マストパイピング

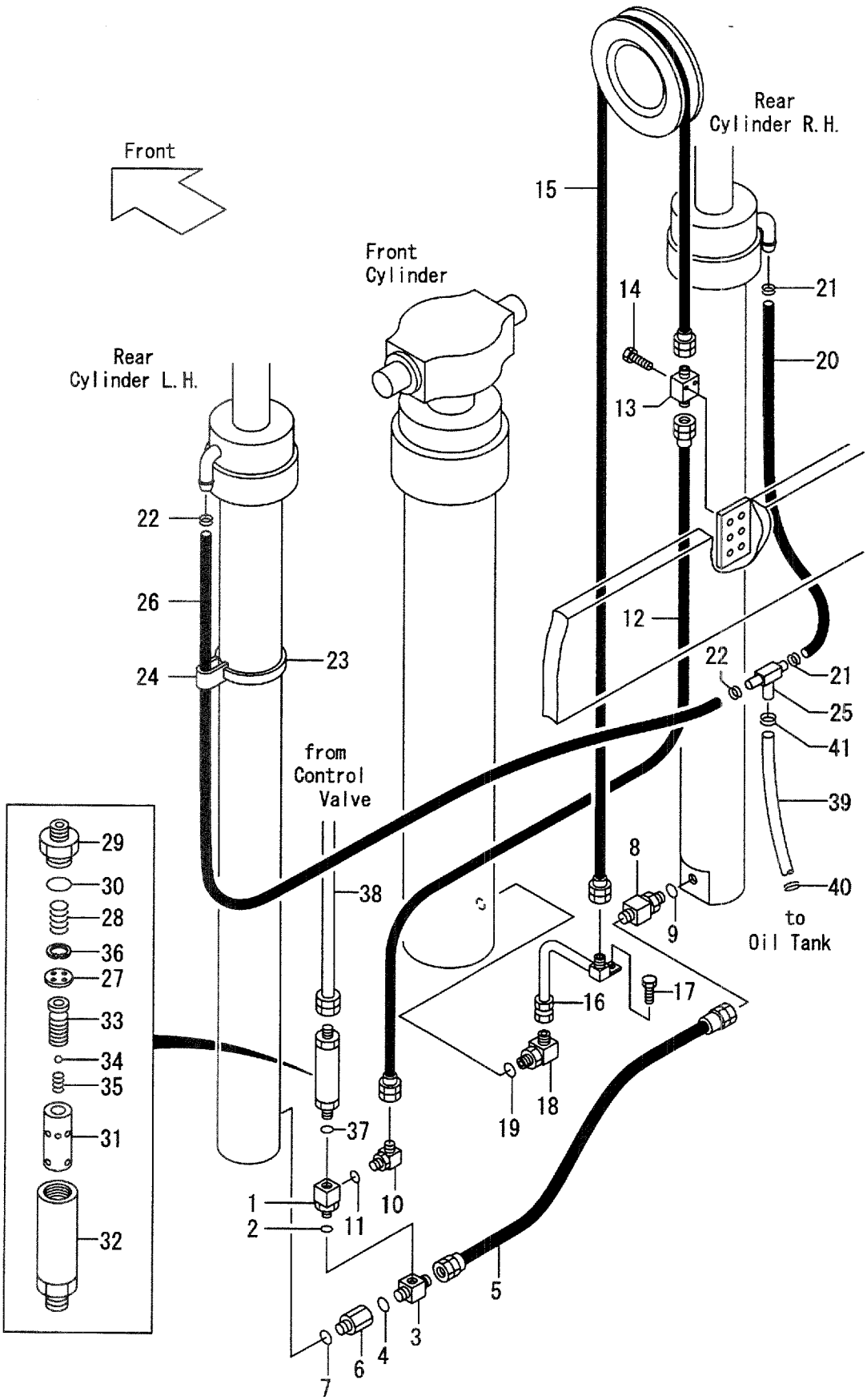

A:VFHM35H(FD50,FG50)

Item No	Part No.	Mark	Description		Req'd	Remarks : Serial No.
A1	224T0-91001		THREE-WAY-ASSY	ｽﾘｰｳｪｲｱｯｾﾝ	1	INC.1,2
1	NO PART NO.	#	THREE-WAY	ｽﾘｰｳｴｲ	1	
2	03320-00240		O-RING	Oﾘﾝｸﾞ	1	
A2	24609-43682		THREE-WAY-ASSY	ｽﾘｰｳｪｲｱｯｾﾝ	1	INC.3,4
3	NO PART NO.	#	THREE-WAY	ｽﾘｰｳｴｲ	1	
4	03320-00180		O-RING	Oﾘﾝｸﾞ	1	
5	224T8-42861		HOSE	ﾎｰｽ	1	
A3	228C0-91011		NIPPLE-ASSY	ﾆｯﾌﾟﾙｱｯｾﾝ	1	INC.6,7
6	NO PART NO.	#	NIPPLE	ﾆｯﾌﾟﾙ	1	
7	03320-00180	*	O-RING	Oﾘﾝｸﾞ	1	
A4	244T8-44001		NIPPLE-ASSY	ﾆｯﾌﾟﾙｱｯｾﾝ	1	INC.8,9
8	NO PART NO.	#	NIPPLE	ﾆｯﾌﾟﾙ	1	
9	03320-00240	*	O-RING	Oﾘﾝｸﾞ	1	
10	24310-92571		ELBOW	ｴﾙﾎﾞ	1	
11	03320-00240		O-RING	Oﾘﾝｸﾞ	1	
12	224T8-02101		HOSE	ﾎｰｽ	1	
13	224T0-92231		NIPPLE	ﾆｯﾌﾟﾙ	1	
14	01184-10060		BOLT	ﾎﾞﾙﾄ	1	
15	22430-92641		HOSE VFHM360	ﾎｰｽ	1	
-	224T0-93131		HOSE VFHM400	ﾎｰｽ	1	
-	235H0-93011		HOSE VFHM435	ﾎｰｽ	1	
-	235H0-93021		HOSE VFHM480	ﾎｰｽ	1	
-	235H0-93031		HOSE VFHM500	ﾎｰｽ	1	
-	235H0-93041		HOSE VFHM540	ﾎｰｽ	1	
-	235H0-93051		HOSE VFHM550	ﾎｰｽ	1	
-	235H0-93061		HOSE VFHM600	ﾎｰｽ	1	
-	235H0-93071		HOSE VFHM650	ﾎｰｽ	1	
-	235H0-93081		HOSE VFHM700	ﾎｰｽ	1	
-	235H0-93091		HOSE VFHM750	ﾎｰｽ	1	
-	235H0-93101		HOSE VFHM800	ﾎｰｽ	1	
16	228C0-92301		PIPE	ﾊﾟｲﾌﾟ	1	
17	01186-10016		BOLT	ﾎﾞﾙﾄ	1	
18	24310-92571		ELBOW	ｴﾙﾎﾞ	1	
19	03320-00240		O-RING	Oﾘﾝｸﾞ	1	
20	24328-40070		HOSE VFHM360	ﾎｰｽ	1	
-	24328-40080		HOSE VFHM400	ﾎｰｽ	1	
-	24328-40095		HOSE VFHM435	ﾎｰｽ	1	
-	24328-40110		HOSE VFHM480	ﾎｰｽ	1	
-	24328-40120		HOSE VFHM500	ﾎｰｽ	1	
-	24328-40130		HOSE VFHM540	ﾎｰｽ	1	
-	24328-40135		HOSE VFHM550	ﾎｰｽ	1	
-	24328-40155		HOSE VFHM600	ﾎｰｽ	1	
-	24328-40175		HOSE VFHM650	ﾎｰｽ	1	
-	24328-40190		HOSE VFHM700	ﾎｰｽ	1	
-	24328-40215		HOSE VFHM750	ﾎｰｽ	1	
-	24328-40230		HOSE VFHM800	ﾎｰｽ	1	
21	04911-00022		CLIP	ｸﾘｯﾌﾟ	2	
22	24329-46201		CLIP	ｸﾘｯﾌﾟ	2	
23	23678-42411		BAND	ﾊﾞﾝﾄﾞ	4	
24	53675-54101		BAND	ﾊﾞﾝﾄﾞ	4	

FIG.223 MAST PIPING [VFHM35H]

(M4040890) マストパイピング

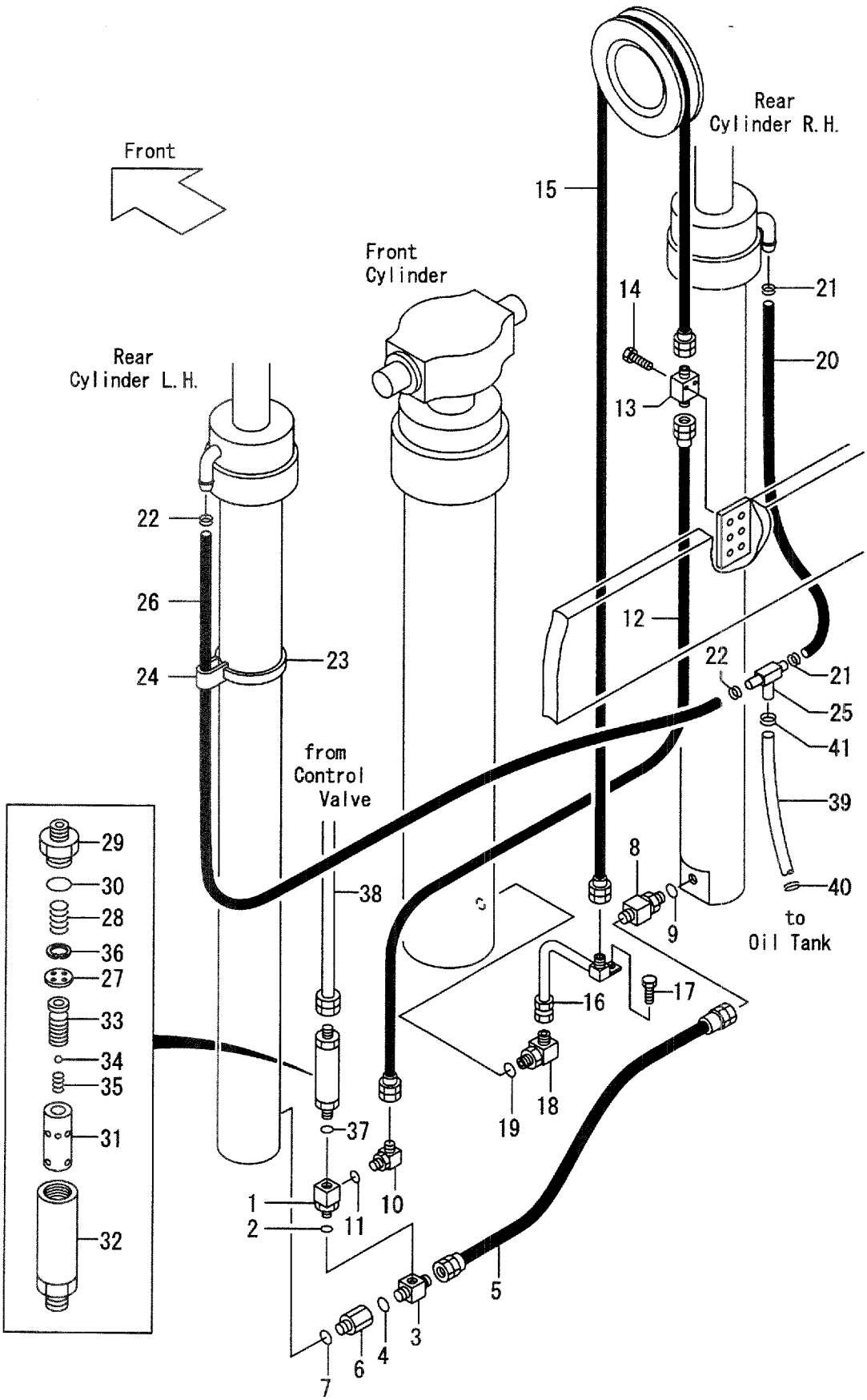

A:VFHM35H(FD50,FG50)

Item No	Part No.	Mark	Description		Req'd	Remarks : Serial No.
25	24329-46052		THREE-WAY	ｽﾘｰｳｴｲ	1	
26	24328-40120		HOSE VFHM360	ﾎｰｽ	1	
-	24328-40130		HOSE VFHM400	ﾎｰｽ	1	
-	24328-40145		HOSE VFHM435	ﾎｰｽ	1	
-	24328-40160		HOSE VFHM480	ﾎｰｽ	1	
-	24328-40170		HOSE VFHM500	ﾎｰｽ	1	
-	24328-40180		HOSE VFHM540	ﾎｰｽ	1	
-	24328-40185		HOSE VFHM550	ﾎｰｽ	1	
-	24328-40205		HOSE VFHM600	ﾎｰｽ	1	
-	24328-40225		HOSE VFHM650	ﾎｰｽ	1	
-	24328-40240		HOSE VFHM700	ﾎｰｽ	1	
-	24328-40265		HOSE VFHM750	ﾎｰｽ	1	
-	24328-40280		HOSE VFHM800	ﾎｰｽ	1	
A5	228C8-41002		REGULATOR-ASSY,FLOW	ﾚｷﾞｭﾚｰﾀｱｯｾﾝ	1	INC.27-36
27	NO PART NO.	#	PLATE	ﾌﾟﾚｰﾄ	1	
28	24609-43631		SPRING	ｽﾌﾟﾘﾝｸﾞ	2	
29	NO PART NO.	#	NIPPLE	ﾆｯﾌﾟﾙ	1	
30	03300-00360		O-RING	Oﾘﾝｸﾞ	1	
31	NO PART NO.	#	SLEEVE	ｽﾘｰﾌﾞ	1	
32	NO PART NO.	#	CASE	ｹｰｽ	1	
33	NO PART NO.	#	PISTON	ﾋﾟｽﾄﾝ	1	
34	24459-42951		BALL	ﾎﾞｰﾙ	1	
35	214A8-44151		SPRING	ｽﾌﾟﾘﾝｸﾞ	1	
36	02110-00020		RING,SNAP	ｽﾅｯﾌﾟﾘﾝｸﾞ	1	
37	03320-00240		O-RING	Oﾘﾝｸﾞ	1	
38	224T8-02111		HOSE	ﾎｰｽ	1	
39	04710-06113		HOSE	ﾎｰｽ	1	
40	04911-00032		CLIP	ｸﾘｯﾌﾟ	1	
41	24329-46211		CLIP	ｸﾘｯﾌﾟ	1	

PARTS NUMBER INDEX

Part No.	Fig.No.	Part No.	Fig.No.	Part No.	Fig.No.	Part No.	Fig.No.
B-C0013-40004	111	B-21001-00332	112A	B-21003-40072	112	B-21011-40801	122
B-C0013-40004	112	B-21001-00332	113A	B-21003-40072	113	B-21011-40801	123
B-C0013-40004	113	B-21001-00333	110	B-21003-40072	113	B-21011-40801	123
B-C0013-40006	120	B-21001-00333	111	B-21003-40072	121	B-21011-40801	123
B-C0013-40006	110A	B-21001-00333	112	B-21003-40072	122	B-21011-40827	110
B-C0013-40006	111A	B-21001-00333	113	B-2101A-40001	110	B-21011-40840	111
B-C0013-40006	112A	B-21001-00333	110A	B-2101A-40001	111	B-21011-40840	112
B-C0013-40006	113A	B-21001-00333	111A	B-2101A-40001	112	B-21011-40840	113
B-C0013-41008	111	B-21001-00333	112A	B-2101A-40001	113	B-21011-40840	122
B-C0013-41008	112	B-21001-00333	113A	B-2101A-40002	110	B-21011-42001	110
B-C0013-41008	113	B-21001-00334	110	B-2101A-40002	111	B-21011-42009	111
B-C0013-41049	122	B-21001-00334	110	B-2101A-40002	112	B-21011-42009	112
B-C0013-41049	110A	B-21001-00334	111	B-2101A-40002	113	B-21011-42009	113
B-C0013-41049	111A	B-21001-00334	111	B-2101A-40002	122	B-21011-42009	122
B-C0013-41049	112A	B-21001-00334	111	B-21011-40601	110	B-21013-30664	110
B-C0013-41049	113A	B-21001-00334	112	B-21011-40601	111	B-21013-30664	111
B-C0028-01601	110	B-21001-00334	112	B-21011-40601	111	B-21013-30664	112
B-T1451-10001	122	B-21001-00334	112	B-21011-40601	111	B-21013-30664	113
B-21001-00098	110	B-21001-00334	113	B-21011-40601	112	B-21013-30664	110A
B-21001-00098	111	B-21001-00334	113	B-21011-40601	112	B-21013-30664	111A
B-21001-00098	112	B-21001-00334	113	B-21011-40601	112	B-21013-30664	112A
B-21001-00098	113	B-21001-00334	120	B-21011-40601	113	B-21013-30664	113A
B-21001-00098	120	B-21001-00334	121	B-21011-40601	113	B-21013-40402	110
B-21001-00098	124	B-21001-00334	122	B-21011-40601	113	B-21013-40402	111
B-21001-00212	110	B-21001-00334	123	B-21011-40601	121	B-21013-40402	112
B-21001-00212	110	B-21001-00334	123	B-21011-40601	122	B-21013-40402	113
B-21001-00212	111	B-21001-00334	123	B-21011-40601	123	B-21013-40402	124
B-21001-00212	111	B-21001-00581	120	B-21011-40601	123	B-21013-40402	110A
B-21001-00212	112	B-21001-00690	110	B-21011-40601	123	B-21013-40402	111A
B-21001-00212	112	B-21001-00690	110	B-21011-40701	110	B-21013-40402	112A
B-21001-00212	113	B-21001-00690	111	B-21011-40701	110	B-21013-40402	113A
B-21001-00212	113	B-21001-00690	111	B-21011-40701	111	B-21013-40666	110
B-21001-00212	121	B-21001-00690	111	B-21011-40701	111	B-21013-40666	111
B-21001-00212	124	B-21001-00690	112	B-21011-40701	111	B-21013-40666	112
B-21001-00213	110	B-21001-00690	112	B-21011-40701	112	B-21013-40666	113
B-21001-00213	110	B-21001-00690	112	B-21011-40701	112	B-21013-40666	121
B-21001-00213	111	B-21001-00690	113	B-21011-40701	112	B-21013-40666	110A
B-21001-00213	111	B-21001-00690	113	B-21011-40701	113	B-21013-40666	111A
B-21001-00213	112	B-21001-00690	113	B-21011-40701	113	B-21013-40666	112A
B-21001-00213	112	B-21001-00690	121	B-21011-40701	113	B-21013-40666	113A
B-21001-00213	113	B-21001-00690	122	B-21011-40701	121	B-21013-41868	110
B-21001-00213	113	B-21001-00690	123	B-21011-40701	122	B-21013-47307	111
B-21001-00213	121	B-21001-00690	123	B-21011-40701	123	B-21013-47307	112
B-21001-00213	124	B-21001-00690	123	B-21011-40701	123	B-21013-47307	113
B-21001-00258	110	B-21001-90241	120	B-21011-40701	123	B-21013-47307	123
B-21001-00258	111	B-21003-40010	110	B-21011-40727	111	B-21013-47307	123
B-21001-00258	112	B-21003-40010	110	B-21011-40727	112	B-21013-47307	123
B-21001-00258	113	B-21003-40010	111	B-21011-40727	113	B-21013-47307	111A
B-21001-00258	124	B-21003-40010	112	B-21011-40801	110	B-21013-47307	112A
B-21001-00266	110	B-21003-40010	113	B-21011-40801	110	B-21013-47307	113A
B-21001-00266	111	B-21003-40010	122	B-21011-40801	111	B-21021-40401	110
B-21001-00266	112	B-21003-40071	110	B-21011-40801	111	B-21021-40401	110A
B-21001-00266	113	B-21003-40071	111	B-21011-40801	111	B-21021-40402	110
B-21001-00266	122	B-21003-40071	112	B-21011-40801	112	B-21021-40402	110A
B-21001-00332	110	B-21003-40071	113	B-21011-40801	112	B-21031-40401	111
B-21001-00332	111	B-21003-40072	110	B-21011-40801	112	B-21031-40401	111A
B-21001-00332	112	B-21003-40072	110	B-21011-40801	113	B-21031-40402	111
B-21001-00332	113	B-21003-40072	111	B-21011-40801	113	B-21031-40402	111A
B-21001-00332	110A	B-21003-40072	111	B-21011-40801	113	B-21041-40401	112
B-21001-00332	111A	B-21003-40072	112	B-21011-40801	121	B-21041-40401	112A

PARTS NUMBER INDEX

Part No.	Fig.No.	Part No.	Fig.No.	Part No.	Fig.No.	Part No.	Fig.No.
B-21041-40402	112	B-21111-40708	112	B-91111-60102	123	C-52-11218-15161	61A
B-21041-40402	112A	B-21111-40708	113	B-92702-06221	110	C-52-11218-25151	61
B-21051-40401	113A	B-21111-40708	122	B-92702-06221	110	C-52-11218-25151	61A
B-21051-40402	113A	B-21111-40907	111	B-92702-06221	111	C-52-11218-25151	62
B-21111-40407	110	B-21111-40907	111	B-92702-06221	111	C-52-11218-25161	61
B-21111-40407	111	B-21111-40907	112	B-92702-06221	112	C-52-11218-25161	61A
B-21111-40407	111	B-21111-40907	112	B-92702-06221	112	C-52-11230-09010	61
B-21111-40407	112	B-21111-40907	113	B-92702-06221	113	C-52-11230-09010	61A
B-21111-40407	112	B-21111-40907	113	B-92702-06221	113	C-52-11230-09010	62
B-21111-40407	113	B-21111-40907	121	B-92702-06221	121	C-52-11232-54540	61
B-21111-40407	113	B-21111-40907	122	B-92702-06221	123	C-52-11232-54540	61A
B-21111-40407	121	B-21111-40907	123	B-92702-06221	123	C-52-11239-51270	61
B-21111-40407	123	B-21111-40907	123	B-92702-06221	123	C-52-11239-51270	61A
B-21111-40407	123	B-21111-40907	123	B-92703-06221	122	C-52-11242-13300	61
B-21111-40407	123	B-21111-43001	110	B-94101-10252	110	C-52-11242-13300	61A
B-21111-40504	110	B-21111-43001	110	B-94101-10252	111	C-52-11242-23300	61
B-21111-40504	110	B-21111-43001	111	B-94101-10252	111	C-52-11242-23300	61A
B-21111-40504	111	B-21111-43001	111	B-94101-10252	111	C-52-11242-54010	61
B-21111-40504	111	B-21111-43001	111	B-94101-10252	112	C-52-11242-54010	61A
B-21111-40504	111	B-21111-43001	112	B-94101-10252	112	C-52-11246-54071	61
B-21111-40504	112	B-21111-43001	112	B-94101-10252	112	C-52-11246-54071	61A
B-21111-40504	112	B-21111-43001	112	B-94101-10252	113	C-52-11249-55310	61
B-21111-40504	112	B-21111-43001	113	B-94101-10252	113	C-52-11249-55310	61A
B-21111-40504	113	B-21111-43001	113	B-94101-10252	113	C-52-11252-11000	62
B-21111-40504	113	B-21111-43001	113	B-94101-10252	121	C-52-11252-14580	62
B-21111-40504	113	B-21111-43001	121	B-94101-10252	122	C-52-11252-14601	62
B-21111-40504	121	B-21111-43001	122	B-94101-10252	123	C-52-11252-15260	62
B-21111-40504	122	B-21111-43001	123	B-94101-10252	123	C-52-11252-21000	62
B-21111-40504	123	B-21111-43001	123	B-94101-10252	123	C-52-11252-24580	62
B-21111-40504	123	B-21111-43001	123	B-97703-00221	111	C-52-11252-24601	62
B-21111-40504	123	B-21113-40058	110	B-97703-00221	112	C-52-11252-25260	62
B-21111-40602	110	B-21113-40058	111	B-97703-00221	113	C-52-11252-52002	62
B-21111-40602	110	B-21113-40058	112	BK-6A09100001	46	C-52-11252-52350	62
B-21111-40602	111	B-21113-40058	113	BK-6B11500000	46	C-52-11252-54070	62
B-21111-40602	111	B-21113-40058	110A	BK-6500220000	46	C-52-11252-55081	62
B-21111-40602	111	B-21113-40058	111A	BK-6540100400	46	C-52-11252-58990	62
B-21111-40602	112	B-21113-40058	112A	BK-8051112010	46	C-52-11252-59032	62
B-21111-40602	112	B-21113-40058	113A	C-K2-11218-02310	61	C-52-11254-13300	62
B-21111-40602	112	B-21113-40308	111	C-K2-11218-02310	61A	C-52-11254-15160	62
B-21111-40602	113	B-21113-40308	112	C-K2-11239-52002	61	C-52-11254-23300	62
B-21111-40602	113	B-21113-40308	113	C-K2-11239-52002	61A	C-52-11254-25160	62
B-21111-40602	113	B-21113-40308	111A	C-K2-11252-52311	62	C-52-11254-54030	62
B-21111-40602	121	B-21113-40308	112A	C-K2-11252-73013	62	C-52-11254-54110	62
B-21111-40602	122	B-21113-40308	113A	C-K2-11252-73023	62	C-52-11254-55270	62
B-21111-40602	123	B-21731-30801	120	C-K2-11254-52204	62	C-52-11255-10004	61
B-21111-40602	123	B-91111-60102	110	C-K2-11255-83012	61	C-52-11255-11002	61
B-21111-40602	123	B-91111-60102	110	C-K2-11255-83013	61A	C-52-11255-11002	61A
B-21111-40706	110	B-91111-60102	111	C-K2-11255-83022	61	C-52-11255-14500	61
B-21111-40706	111	B-91111-60102	111	C-K2-11255-83023	61A	C-52-11255-14500	61A
B-21111-40706	111	B-91111-60102	111	C-51-B2101-02322	62	C-52-11255-14530	61
B-21111-40706	112	B-91111-60102	112	C-52-10901-64550	61	C-52-11255-14530	61A
B-21111-40706	112	B-91111-60102	112	C-52-10901-64550	61A	C-52-11255-20004	61
B-21111-40706	113	B-91111-60102	112	C-52-10901-64550	62	C-52-11255-21002	61
B-21111-40706	113	B-91111-60102	113	C-52-10901-64560	61	C-52-11255-21002	61A
B-21111-40706	121	B-91111-60102	113	C-52-10901-64560	61A	C-52-11255-24500	61
B-21111-40706	123	B-91111-60102	113	C-52-10901-64560	62	C-52-11255-24500	61A
B-21111-40706	123	B-91111-60102	121	C-52-11218-15151	61	C-52-11255-24530	61
B-21111-40706	123	B-91111-60102	122	C-52-11218-15151	61A	C-52-11255-24530	61A
B-21111-40708	110	B-91111-60102	123	C-52-11218-15151	62	C-52-11255-52003	61
B-21111-40708	111	B-91111-60102	123	C-52-11218-15161	61	C-52-11255-52003	61A

PARTS NUMBER INDEX

Part No.	Fig.No.	Part No.	Fig.No.	Part No.	Fig.No.	Part No.	Fig.No.
C-52-11255-52350	61	01030-04018	22	01100-08020	33	01100-14030	162
C-52-11255-52350	61A	01030-04020	22	01100-08020	70	01100-14030	167
C-52-11255-54010	61	01030-04020	23	01100-08020	70	01100-14030	177
C-52-11255-54010	61A	01030-04020	27	01100-08020	70	01100-14030	183
C-52-11255-54110	61	01030-04020	40	01100-08020	71	01100-14030	183
C-52-11255-54110	61A	01030-05010	144	01100-08025	85	01100-14030	188
C-52-11255-58990	61	01030-05010	149	01100-08030	150	01100-14030	194
C-52-11255-58990	61A	01030-05012	149	01100-08050	94	01100-14030	194
C-52-13207-14500	62	01030-05015	149	01100-08065	141	01100-14030	206
C-52-13207-24500	62	01030-05015	149	01100-10020	150	01100-14030	212
C-52-51308-54160	62	01030-05065	22	01100-10025	125	01100-16080	85
C-52-51510-04160	61	01030-06010	158	01100-10125	141	01100-20085	95
C-52-51510-04160	61A	01030-06010	168	01100-12020	174	01100-20100	70
C-52-81002-04131	61	01030-06012	149	01100-12020	201	01100-20100	70
C-52-81002-04131	61A	01031-04012	149	01100-12020	220	01100-20100	70
C-52-81002-04131	62	01066-10012	136	01100-12020	154A	01100-20100	71
C-90-0527-0612	62	01066-10012	136A	01100-12020	164A	01103-08012	47
C-90-2120-1400	62	01100-04040	88	01100-12020	179A	01103-08012	49
C-90-2300-0600	62	01100-06012	118	01100-12020	190A	01103-08016	149
C-90-2300-1201	61	01100-06012	119	01100-12020	208A	01103-08016	45
C-90-2300-1201	61A	01100-06012	150	01100-12020	214A	01103-08016	47
C-90-3100-1615	62	01100-06016	87	01100-12030	154	01103-08016	49
C-90-9200-0800	61	01100-06016	88	01100-12030	159	01103-08020	149
C-90-9200-0800	61A	01100-06020	23	01100-12030	164	01103-08020	44
FA4846-80403	105	01100-06020	40	01100-12030	169	01103-08025	133
FC-MM-4987	105	01100-06050	22	01100-12030	179	01103-08025	43
FC-MP-3169	105	01100-06055	125	01100-12030	190	01103-08025	54
FC-WM-641-S	105	01100-06060	39	01100-12030	208	01103-08025	55
FC-WM-637-14	105	01100-08012	150	01100-12030	214	01103-08025	55
FC-WM-637-16	105	01100-08012	174	01100-12030	208A	01103-08065	54
FC-WM-637-18	105	01100-08012	201	01100-12040	207	01103-08065	55
FC-WM-637-19	105	01100-08012	220	01100-12040	213	01103-08075	54
FC-WM-637-26	105	01100-08012	4	01100-12040	219	01103-08075	55
FC-WM-637-4L	105	01100-08012	5	01100-12045	153	01103-08100	54
FC-WM-637-4R	105	01100-08012	6	01100-12045	158	01103-08100	55
FC-WM-637-5LC	105	01100-08012	154A	01100-12045	163	01103-10020	46
FC-WM-637-5R	105	01100-08012	164A	01100-12045	168	01103-10020	48
FC-WM-637-6	105	01100-08012	179A	01100-12045	173	01103-10025	46
FC-WM-641-1	105	01100-08012	190A	01100-12045	178	01103-10025	48
FC-WM-641-2	105	01100-08012	208A	01100-12045	184	01103-10030	108
FC-WM-641-7	105	01100-08012	214A	01100-12045	189	01103-10030	43
FC-WM-641-8	105	01100-08016	148	01100-12045	195	01103-10030	46
FC-WM-641-9	105	01100-08016	149	01100-12045	200	01103-10030	48
FC-XP-1393	105	01100-08018	182	01100-12090	210	01103-10035	43
FC-XP-1397	105	01100-08018	182	01100-12090	216	01103-10035	56
FC-XP-5023	105	01100-08018	182	01100-12090	222	01103-10040	185
FC-XP-5254	105	01100-08018	182	01100-12100	185	01103-10040	196
R-400-00384-15	109	01100-08018	193	01100-12100	196	01103-10045	108
R-400-50647-27	109	01100-08018	193	01100-14025	152	01103-10050	56
R-402-00012-12	109	01100-08018	193	01100-14025	157	01103-10070	43
R-402-00483-05	109	01100-08018	193	01100-14025	162	01103-10070	46
R-402-00516-38	109	01100-08018	205	01100-14025	167	01103-10070	48
R-402-00681-00	109	01100-08018	205	01100-14025	177	01103-10095	46
S-8008-148	64	01100-08018	205	01100-14025	183	01103-10095	48
S-8206-010	64	01100-08018	205	01100-14025	188	01103-12025	180
S-8208-047	64	01100-08020	149	01100-14025	194	01103-12025	191
S-8340-236	64	01100-08020	150	01100-14025	206	01103-12025	203
01030-02012	63	01100-08020	22	01100-14025	212	01103-12025	209
01030-04010	150	01100-08020	31	01100-14030	152	01103-12025	215
01030-04016	149	01100-08020	32	01100-14030	157	01103-12025	221

PARTS NUMBER INDEX

Part No.	Fig.No.	Part No.	Fig.No.	Part No.	Fig.No.	Part No.	Fig.No.
01103-12035	60	01103-20085	207	01130-10020	60	01183-08016	4
01103-12045	43	01103-20085	213	01170-05045	54	01183-08016	8
01103-12070	43	01103-20085	219	01170-05045	55	01183-08016	9
01103-14025	199	01103-22060	207	01171-06025	85	01183-08016	35
01103-14030	172	01103-22060	210	01181-06010	142	01183-08016	36
01103-14030	199	01103-22060	213	01181-06010	142	01183-08016	70
01103-14030	218	01103-22060	216	01181-08016	101	01183-08016	70
01103-14040	60	01103-22060	222	01181-08016	101	01183-08016	70
01103-16030	148	01106-08020	108	01181-08016	101	01183-08016	85
01103-16030	158	01106-10035	41	01181-08016	101	01183-08016	89
01103-16030	168	01106-10040	41	01181-08025	5	01183-08016	90
01103-16030	85	01106-10045	42	01181-08025	6	01183-08020	101
01103-16030	86	01106-10050	41	01182-10030	13	01183-08020	142
01103-16040	158	01106-12035	58	01182-10030	14	01183-08020	149
01103-16040	168	01106-12035	59	01182-12030	15	01183-08020	150
01103-16040	71	01106-14030	108	01183-04010	134	01183-08020	7
01103-16045	155	01106-14050	60	01183-04010	151	01183-08020	8
01103-16045	165	01110-10020	150	01183-05012	147	01183-08020	9
01103-16045	175	01110-10025	108	01183-06010	134	01183-08020	90
01103-16055	136	01110-30200	98	01183-06010	142	01183-08025	126
01103-16055	136A	01111-16025	39	01183-06010	151	01183-08025	4
01103-16065	148	01111-16025	46	01183-06012	116	01183-08025	11
01103-16065	152	01111-16025	48	01183-06012	117	01183-08025	18
01103-16065	157	01116-10020	42	01183-06012	7	01183-08025	18
01103-16065	160	01116-10020	43	01183-06012	8	01183-08025	19
01103-16065	162	01116-10020	46	01183-06012	18	01183-08025	19
01103-16065	167	01116-10020	48	01183-06012	19	01183-08025	20
01103-16065	170	01116-10030	108	01183-06012	20	01183-08025	20
01103-16065	172	01116-10040	46	01183-06012	26	01183-08025	85
01103-16065	177	01116-10040	48	01183-06012	26	01183-08025	85
01103-16065	183	01116-10045	46	01183-06012	31	01183-08025	85
01103-16065	188	01116-10045	48	01183-06012	31	01183-08035	57
01103-16065	194	01120-10035	89	01183-06012	32	01183-08035	85
01103-16065	199	01120-10035	90	01183-06012	33	01183-08040	85
01103-16065	206	01120-12035	90	01183-06012	33	01183-08045	142
01103-16065	212	01120-16035	70	01183-06016	155	01183-10025	101
01103-16065	218	01120-16035	70	01183-06016	160	01183-10025	102
01103-16070	180	01120-16035	70	01183-06016	165	01183-10025	102
01103-16070	191	01120-16040	155	01183-06016	170	01183-12030	207
01103-16070	203	01120-16040	155	01183-06016	175	01183-12030	213
01103-16070	209	01120-16040	160	01183-06016	210	01183-12030	219
01103-16070	215	01120-16040	160	01183-06016	216	01184-08012	43
01103-16070	221	01120-16040	165	01183-06016	222	01184-08015	185
01103-20045	178	01120-16040	165	01183-06016	8	01184-08015	196
01103-20045	189	01120-16040	170	01183-06016	87	01184-08020	187
01103-20045	200	01120-16040	170	01183-06016	88	01184-08020	198
01103-20045	99	01120-16040	175	01183-06030	40	01184-10020	136
01103-20055	207	01120-16040	175	01183-08012	18	01184-10020	153
01103-20055	213	01120-16040	181	01183-08012	18	01184-10020	156
01103-20055	219	01120-16040	186	01183-08012	19	01184-10020	158
01103-20085	153	01120-16040	192	01183-08012	19	01184-10020	161
01103-20085	158	01120-16040	197	01183-08012	20	01184-10020	163
01103-20085	163	01120-16040	204	01183-08012	20	01184-10020	166
01103-20085	168	01120-16040	216	01183-08016	100	01184-10020	168
01103-20085	173	01120-16040	222	01183-08016	101	01184-10020	171
01103-20085	178	01120-16040	222	01183-08016	102	01184-10020	173
01103-20085	184	01120-16045	181	01183-08016	142	01184-10020	176
01103-20085	189	01120-16045	186	01183-08016	149	01184-10020	178
01103-20085	195	01120-16045	210	01183-08016	151	01184-10020	181
01103-20085	200	01123-10045	44	01183-08016	3	01184-10020	182

PARTS NUMBER INDEX

Part No.	Fig.No.	Part No.	Fig.No.	Part No.	Fig.No.	Part No.	Fig.No.
01184-10020	184	01184-12025	218	01186-10016	211	01400-00006	155
01184-10020	186	01184-12025	65	01186-10016	217	01400-00006	160
01184-10020	187	01184-12025	65	01186-10016	223	01400-00006	165
01184-10020	189	01184-12045	207	01186-10016	35	01400-00006	170
01184-10020	192	01184-12045	213	01186-10016	36	01400-00006	175
01184-10020	193	01184-12045	219	01186-10020	142	01400-00006	210
01184-10020	195	01184-12050	116	01186-10020	142	01400-00006	216
01184-10020	197	01184-12050	116	01186-10020	87	01400-00006	222
01184-10020	198	01184-12050	117	01186-10020	88	01400-00006	23
01184-10020	200	01184-12050	117	01186-10025	101	01400-00006	34
01184-10020	204	01184-12050	118	01186-10025	101	01400-00006	40
01184-10020	205	01184-12050	118	01186-10025	102	01400-00006	87
01184-10020	207	01184-12050	119	01186-10025	128	01400-00006	87
01184-10020	213	01184-12050	119	01186-10025	5	01400-00006	88
01184-10020	219	01185-06012	135	01186-10025	15	01400-00006	88
01184-10020	18	01185-06012	24	01186-10025	16	01400-00008	104
01184-10020	19	01185-06012	34	01186-10025	43	01400-00008	106
01184-10020	20	01185-06016	21	01186-10025	44	01400-00008	107
01184-10020	89	01185-06025	63	01186-10025	72	01400-00008	143
01184-10020	90	01185-08012	126	01186-10025	94	01400-00008	149
01184-10020	136A	01185-08012	127	01186-10030	15	01400-00008	149
01184-10025	89	01185-08012	131	01186-10030	24	01400-00008	150
01184-10025	90	01185-08012	132	01186-10030	35	01400-00008	1
01184-10040	146	01185-08012	11	01186-10030	36	01400-00008	4
01184-10050	89	01185-08012	12	01186-10030	87	01400-00008	5
01184-10060	211	01185-08012	97	01186-10030	88	01400-00008	6
01184-10060	217	01185-08016	100	01186-10035	94	01400-00008	18
01184-10060	223	01185-08016	128	01186-10040	101	01400-00008	19
01184-12020	154	01185-08016	135	01186-12020	147	01400-00008	20
01184-12020	159	01185-08016	135	01186-12025	72	01400-00008	22
01184-12020	164	01185-08016	135	01186-12025	99	01400-00008	31
01184-12020	169	01185-08016	3	01186-12030	148	01400-00008	32
01184-12020	174	01185-08016	3	01186-12035	85	01400-00008	33
01184-12020	179	01185-08016	9	01186-12035	85	01400-00008	57
01184-12020	190	01185-08016	9	01186-12040	116	01400-00008	90
01184-12020	201	01185-08016	10	01186-12040	117	01400-00008	94
01184-12020	208	01185-08016	10	01186-12040	118	01400-00008	104A
01184-12020	214	01185-08016	12	01186-12040	119	01400-00008	105A
01184-12020	220	01185-08020	103	01186-12040	134	01400-00008	143A
01184-12020	154A	01185-08020	103	01186-12040	147	01400-00010	101
01184-12020	164A	01185-08020	125	01186-12050	116	01400-00010	142
01184-12020	179A	01185-08020	134	01186-12050	117	01400-00010	142
01184-12020	190A	01185-08020	5	01186-12050	118	01400-00010	155
01184-12020	208A	01185-08020	7	01186-12050	119	01400-00010	155
01184-12020	208A	01185-08020	8	01212-08020	149	01400-00010	160
01184-12020	214A	01185-08020	18	01212-12030	2	01400-00010	160
01184-12025	108	01185-08020	19	01219-10030	151	01400-00010	165
01184-12025	152	01185-08020	20	01219-14030	151	01400-00010	165
01184-12025	157	01185-08020	31	01220-08090	151	01400-00010	170
01184-12025	162	01185-08020	32	01221-10060	133	01400-00010	170
01184-12025	167	01185-08020	33	01231-06030	151	01400-00010	175
01184-12025	172	01185-08025	103	01400-00004	23	01400-00010	175
01184-12025	177	01185-08025	35	01400-00004	40	01400-00010	181
01184-12025	183	01185-08025	36	01400-00005	149	01400-00010	185
01184-12025	188	01185-08040	125	01400-00005	149	01400-00010	186
01184-12025	191	01185-10016	15	01400-00006	101	01400-00010	192
01184-12025	194	01185-10016	16	01400-00006	102	01400-00010	196
01184-12025	199	01185-10020	151	01400-00006	142	01400-00010	197
01184-12025	206	01186-08020	147	01400-00006	142	01400-00010	204
01184-12025	212	01186-08025	39	01400-00006	148	01400-00010	210

PARTS NUMBER INDEX

Part No.	Fig.No.	Part No.	Fig.No.	Part No.	Fig.No.	Part No.	Fig.No.
01400-00010	216	01402-00012	196	01412-10030	71	02000-00010	165
01400-00010	222	01402-00012	90	01412-10030	83	02000-00010	165
01400-00010	222	01402-00014	64	01412-10030	83	02000-00010	170
01400-00010	15	01402-00016	155	01412-10030	83	02000-00010	170
01400-00010	44	01402-00016	155	01412-10030	83	02000-00010	175
01400-00010	70	01402-00016	160	01420-00006	18	02000-00010	175
01400-00010	70	01402-00016	160	01420-00006	19	02000-00010	181
01400-00010	70	01402-00016	165	01420-00006	20	02000-00010	185
01400-00010	71	01402-00016	165	01420-00008	18	02000-00010	186
01400-00012	116	01402-00016	170	01420-00008	20	02000-00010	192
01400-00012	116	01402-00016	170	02000-00002	63	02000-00010	196
01400-00012	117	01402-00016	175	02000-00004	23	02000-00010	197
01400-00012	117	01402-00016	175	02000-00004	40	02000-00010	204
01400-00012	118	01402-00016	181	02000-00006	100	02000-00010	210
01400-00012	118	01402-00016	186	02000-00006	101	02000-00010	216
01400-00012	119	01402-00016	192	02000-00006	102	02000-00010	222
01400-00012	119	01402-00016	197	02000-00006	148	02000-00010	222
01400-00012	154	01402-00016	204	02000-00006	150	02000-00010	13
01400-00012	159	01402-00016	210	02000-00006	158	02000-00010	14
01400-00012	164	01402-00016	216	02000-00006	168	02000-00010	15
01400-00012	169	01402-00016	222	02000-00006	26	02000-00010	16
01400-00012	179	01402-00016	222	02000-00006	26	02000-00010	63
01400-00012	185	01402-00016	70	02000-00006	87	02000-00010	70
01400-00012	190	01402-00016	70	02000-00006	87	02000-00010	70
01400-00012	196	01402-00016	70	02000-00006	87	02000-00010	70
01400-00012	208	01402-00022	155	02000-00006	88	02000-00010	71
01400-00012	210	01402-00022	160	02000-00006	88	02000-00010	87
01400-00012	214	01402-00022	165	02000-00006	88	02000-00010	88
01400-00012	216	01402-00022	170	02000-00006	90	02000-00010	89
01400-00012	222	01402-00022	175	02000-00006	94	02000-00010	89
01400-00012	87	01402-00022	180	02000-00008	100	02000-00010	90
01400-00012	88	01402-00022	185	02000-00008	101	02000-00010	90
01400-00012	208A	01402-00022	191	02000-00008	101	02000-00016	133
01400-00016	85	01402-00022	196	02000-00008	101	02000-00016	134
01400-10010	108	01402-00022	203	02000-00008	102	02000-00016	1
01400-10014	133	01402-00022	209	02000-00008	102	02000-00016	2
01400-10014	60	01402-00022	210	02000-00008	102	02000-00020	207
01400-10016	136	01402-00022	215	02000-00008	116	02000-00020	213
01400-10016	79	01402-00022	216	02000-00008	117	02000-00020	219
01400-10016	80	01402-00022	221	02000-00008	118	02000-00020	99
01400-10016	80	01402-00022	222	02000-00008	119	02000-00024	43
01400-10016	81	01402-00022	69	02000-00008	141	02000-20010	185
01400-10016	82	01402-00022	69	02000-00008	143	02000-20010	196
01400-10016	136A	01402-00022	69	02000-00008	148	02010-00002	63
01400-10020	58	01402-00024	70	02000-00008	149	02010-00004	23
01400-10020	59	01402-00024	70	02000-00008	150	02010-00004	40
01400-10020	70	01402-00024	70	02000-00008	5	02010-00004	88
01400-10020	70	01402-00027	60	02000-00008	7	02010-00005	144
01400-10020	70	01402-10018	83	02000-00008	8	02010-00006	101
01400-10020	71	01402-10018	83	02000-00008	90	02010-00006	102
01400-10024	83	01405-00008	90	02000-00008	143A	02010-00006	118
01400-10024	83	01407-00024	70	02000-00010	100	02010-00006	119
01400-20010	13	01407-00024	70	02000-00010	108	02010-00006	125
01400-20010	14	01407-00024	70	02000-00010	141	02010-00006	142
01402-00008	19	01412-10016	69	02000-00010	146	02010-00006	142
01402-00008	85	01412-10016	69	02000-00010	150	02010-00006	144
01402-00010	151	01412-10016	69	02000-00010	155	02010-00006	148
01402-00010	89	01412-10020	70	02000-00010	155	02010-00006	150
01402-00010	90	01412-10020	70	02000-00010	160	02010-00006	18
01402-00012	185	01412-10020	70	02000-00010	160	02010-00006	19

PARTS NUMBER INDEX

Part No.	Fig.No.	Part No.	Fig.No.	Part No.	Fig.No.	Part No.	Fig.No.
02010-00006	20	02010-00010	216	02010-00014	183	02011-00012	209
02010-00006	23	02010-00010	222	02010-00014	183	02011-00012	215
02010-00006	39	02010-00010	222	02010-00014	188	02011-00012	221
02010-00006	40	02010-00010	13	02010-00014	188	02011-00012	43
02010-00006	87	02010-00010	14	02010-00014	194	02011-00012	58
02010-00006	88	02010-00010	60	02010-00014	194	02011-00012	59
02010-00008	104	02010-00010	70	02010-00014	206	02011-00012	60
02010-00008	106	02010-00010	70	02010-00014	206	02011-00014	108
02010-00008	107	02010-00010	70	02010-00014	212	02011-00014	172
02010-00008	133	02010-00010	71	02010-00014	212	02011-00014	199
02010-00008	143	02010-00012	116	02010-00016	148	02011-00014	199
02010-00008	148	02010-00012	117	02010-00016	39	02011-00014	218
02010-00008	149	02010-00012	118	02010-00016	85	02011-00014	60
02010-00008	149	02010-00012	119	02010-00020	153	02011-00016	136
02010-00008	149	02010-00012	153	02010-00020	158	02011-00016	148
02010-00008	150	02010-00012	154	02010-00020	163	02011-00016	152
02010-00008	182	02010-00012	158	02010-00020	168	02011-00016	155
02010-00008	182	02010-00012	159	02010-00020	173	02011-00016	157
02010-00008	182	02010-00012	163	02010-00020	178	02011-00016	158
02010-00008	182	02010-00012	164	02010-00020	184	02011-00016	160
02010-00008	193	02010-00012	168	02010-00020	189	02011-00016	162
02010-00008	193	02010-00012	169	02010-00020	195	02011-00016	165
02010-00008	193	02010-00012	173	02010-00020	200	02011-00016	167
02010-00008	193	02010-00012	174	02010-00020	207	02011-00016	168
02010-00008	205	02010-00012	178	02010-00020	213	02011-00016	170
02010-00008	205	02010-00012	179	02010-00020	219	02011-00016	172
02010-00008	205	02010-00012	184	02010-00020	70	02011-00016	175
02010-00008	205	02010-00012	185	02010-00020	70	02011-00016	177
02010-00008	1	02010-00012	189	02010-00020	70	02011-00016	180
02010-00008	4	02010-00012	190	02010-00020	71	02011-00016	183
02010-00008	5	02010-00012	195	02010-00020	95	02011-00016	188
02010-00008	6	02010-00012	196	02010-00030	98	02011-00016	191
02010-00008	22	02010-00012	200	02010-20010	185	02011-00016	194
02010-00008	70	02010-00012	201	02010-20010	196	02011-00016	199
02010-00008	70	02010-00012	207	02011-00008	108	02011-00016	203
02010-00008	70	02010-00012	208	02011-00008	43	02011-00016	206
02010-00008	71	02010-00012	210	02011-00008	44	02011-00016	209
02010-00008	94	02010-00012	213	02011-00008	47	02011-00016	212
02010-00008	104A	02010-00012	214	02011-00008	49	02011-00016	215
02010-00008	105A	02010-00012	216	02011-00008	54	02011-00016	218
02010-00008	143A	02010-00012	219	02011-00008	55	02011-00016	221
02010-00010	108	02010-00012	220	02011-00010	108	02011-00016	46
02010-00010	141	02010-00012	222	02011-00010	185	02011-00016	48
02010-00010	150	02010-00012	154A	02011-00010	196	02011-00016	71
02010-00010	155	02010-00012	164A	02011-00010	41	02011-00016	79
02010-00010	155	02010-00012	179A	02011-00010	42	02011-00016	80
02010-00010	160	02010-00012	190A	02011-00010	42	02011-00016	80
02010-00010	160	02010-00012	208A	02011-00010	43	02011-00016	81
02010-00010	165	02010-00012	208A	02011-00010	43	02011-00016	82
02010-00010	165	02010-00012	214A	02011-00010	46	02011-00016	85
02010-00010	170	02010-00014	152	02011-00010	46	02011-00016	86
02010-00010	170	02010-00014	152	02011-00010	46	02011-00016	136A
02010-00010	175	02010-00014	157	02011-00010	46	02011-00020	178
02010-00010	175	02010-00014	157	02011-00010	48	02011-00020	189
02010-00010	181	02010-00014	162	02011-00010	48	02011-00020	200
02010-00010	186	02010-00014	162	02011-00010	48	02011-00020	207
02010-00010	192	02010-00014	167	02011-00010	48	02011-00020	213
02010-00010	197	02010-00014	167	02011-00012	180	02011-00020	219
02010-00010	204	02010-00014	177	02011-00012	191	02011-00020	99
02010-00010	210	02010-00014	177	02011-00012	203	02011-00022	207

PARTS NUMBER INDEX

Part No.	Fig.No.	Part No.	Fig.No.	Part No.	Fig.No.	Part No.	Fig.No.
02011-00022	210	02100-00030	43	02110-00020	176	02200-32020	89
02011-00022	213	02100-00032	44	02110-00020	182	02200-32020	89
02011-00022	216	02100-00035	47	02110-00020	187	02200-32020	90
02011-00022	222	02100-00035	49	02110-00020	193	02200-32032	69
02030-00027	60	02100-00040	45	02110-00020	198	02200-32032	69
02100-00010	63	02100-00040	50	02110-00020	205	02200-32032	69
02100-00017	133	02100-00040	51	02110-00020	211	02212-10020	43
02100-00020	66	02100-00040	52	02110-00020	217	02212-10020	46
02100-00025	43	02100-00040	53	02110-00020	223	02212-10020	48
02100-00025	71	02100-00045	206	02110-00030	54	02212-10020	54
02100-00030	152	02100-00045	207	02110-00030	55	02212-10020	55
02100-00030	152	02100-00045	212	02110-00037	66	02212-10020	58
02100-00030	152	02100-00045	213	02110-00047	133	02212-10020	59
02100-00030	152	02100-00045	218	02110-00068	136	02212-10025	56
02100-00030	152	02100-00045	219	02110-00068	136A	02212-10025	60
02100-00030	157	02100-00045	45	02110-00082	84	02212-13025	84
02100-00030	157	02100-00050	152	02110-00090	45	02262-06015	100
02100-00030	157	02100-00050	153	02110-00110	185	02262-06015	87
02100-00030	157	02100-00050	155	02110-00110	196	02262-06015	88
02100-00030	157	02100-00050	157	02200-02016	116	02262-08025	116
02100-00030	162	02100-00050	158	02200-02016	117	02262-08025	117
02100-00030	162	02100-00050	160	02200-02016	118	02262-08025	118
02100-00030	162	02100-00050	162	02200-02016	119	02262-08025	119
02100-00030	162	02100-00050	163	02200-02016	90	02262-08030	90
02100-00030	167	02100-00050	165	02200-03025	104	02262-10030	89
02100-00030	167	02100-00050	167	02200-03025	90	02262-10030	89
02100-00030	167	02100-00050	168	02200-03040	155	02262-10030	90
02100-00030	167	02100-00050	170	02200-03040	160	02262-10030	90
02100-00030	172	02100-00050	172	02200-03040	165	02280-10010	60
02100-00030	172	02100-00050	173	02200-03040	170	02360-04013	133
02100-00030	177	02100-00050	175	02200-03040	175	02360-06022	44
02100-00030	177	02100-00050	177	02200-03040	180	02432-01008	137
02100-00030	177	02100-00050	178	02200-03040	185	02432-01008	137
02100-00030	177	02100-00050	180	02200-03040	191	02432-01008	138
02100-00030	177	02100-00050	183	02200-03040	196	02432-01008	138
02100-00030	183	02100-00050	184	02200-03040	203	03000-06214	45
02100-00030	183	02100-00050	188	02200-03040	209	03000-06214	47
02100-00030	188	02100-00050	189	02200-03040	210	03000-06214	49
02100-00030	188	02100-00050	191	02200-03040	215	03000-06303	133
02100-00030	188	02100-00050	194	02200-03040	216	03000-06308	47
02100-00030	188	02100-00050	195	02200-03040	221	03000-06308	49
02100-00030	188	02100-00050	199	02200-03040	222	03000-06308	51
02100-00030	194	02100-00050	200	02200-04035	60	03000-06308	52
02100-00030	194	02100-00050	203	02200-04040	70	03000-06308	53
02100-00030	199	02100-00050	209	02200-04040	70	03000-06310	47
02100-00030	199	02100-00050	210	02200-04040	70	03000-06310	49
02100-00030	199	02100-00050	215	02200-06055	71	03000-06310	51
02100-00030	199	02100-00050	216	02200-06055	83	03000-06310	52
02100-00030	206	02100-00050	219	02200-06055	83	03000-06310	53
02100-00030	206	02100-00050	221	02200-06055	83	03010-06904	66
02100-00030	206	02100-00050	222	02200-06055	83	03041-06310	185
02100-00030	206	02100-00055	45	02200-16010	87	03041-06310	196
02100-00030	206	02100-00055	50	02200-16010	87	03071-30211	70
02100-00030	212	02100-00070	45	02200-16010	87	03071-30211	70
02100-00030	212	02100-00070	47	02200-16010	88	03071-30211	70
02100-00030	212	02100-00070	49	02200-16010	88	03071-30211	71
02100-00030	212	02110-00020	156	02200-16010	88	03071-30214	70
02100-00030	212	02110-00020	161	02200-16016	90	03071-30214	70
02100-00030	218	02110-00020	166	02200-32016	87	03071-30214	70
02100-00030	218	02110-00020	171	02200-32016	88	03071-30214	71

PARTS NUMBER INDEX

Part No.	Fig.No.	Part No.	Fig.No.	Part No.	Fig.No.	Part No.	Fig.No.
03071-30216	58	03320-00180	187	03320-00240	217	04000-00400	115
03071-30216	59	03320-00180	193	03320-00240	217	04011-00404	41
03071-30219	58	03320-00180	193	03320-00240	217	04012-00404	133
03071-30219	59	03320-00180	193	03320-00240	217	04012-00404	135
03146-13201	70	03320-00180	193	03320-00240	217	04012-00404	42
03146-13201	70	03320-00180	198	03320-00240	223	04012-00404	42
03146-13201	70	03320-00180	198	03320-00240	223	04012-00404	43
03190-00013	44	03320-00180	198	03320-00240	223	04015-00404	41
03190-99060	63	03320-00180	205	03320-00240	223	04100-00406	41
03192-00011	70	03320-00180	205	03320-00240	223	04100-00406	43
03192-00011	70	03320-00180	205	03320-00340	181	04134-00202	84
03192-00011	70	03320-00180	205	03320-00340	186	04134-00606	187
03192-00011	71	03320-00180	211	03320-00340	192	04134-00606	198
03192-00016	58	03320-00180	211	03320-00340	197	04139-00404	134
03192-00016	59	03320-00180	217	03320-00340	204	04150-00303	128
03192-10011	70	03320-00180	217	03320-00340	210	04150-20303	114
03192-10011	70	03320-00180	223	03320-00360	156	04150-20303	115
03192-10011	70	03320-00180	223	03320-00360	161	04150-20303	133
03192-10011	71	03320-00240	108	03320-00360	166	04671-03150	134
03192-10016	58	03320-00240	114	03320-00360	171	04671-04220	134
03192-10016	59	03320-00240	114	03320-00360	182	04671-04250	134
03211-09501	70	03320-00240	115	03320-00360	187	04671-04415	134
03211-09501	70	03320-00240	115	03320-00360	193	04671-04430	134
03211-09501	70	03320-00240	156	03320-00360	198	04671-04445	134
03211-09501	71	03320-00240	156	03320-00360	205	04671-04460	134
03217-11501	58	03320-00240	156	03320-00360	211	04700-14120	125
03217-11501	59	03320-00240	161	03320-00360	217	04710-04016	96
03217-14501	58	03320-00240	161	03320-00400	216	04710-04040	129
03217-14501	59	03320-00240	161	03320-00400	222	04710-04040	129
03300-00360	156	03320-00240	166	03340-00100	155	04710-04040	130
03300-00360	161	03320-00240	166	03340-00100	160	04710-04040	130
03300-00360	166	03320-00240	166	03340-00100	210	04710-04050	129
03300-00360	171	03320-00240	171	03340-00130	165	04710-04050	130
03300-00360	176	03320-00240	171	03340-00130	170	04710-04050	1
03300-00360	182	03320-00240	171	03340-00130	175	04710-04117	129
03300-00360	193	03320-00240	176	03340-00130	216	04710-04117	130
03300-00360	211	03320-00240	176	03340-00130	222	04710-04130	129
03300-00360	217	03320-00240	176	03350-00550	83	04710-04130	130
03300-00360	223	03320-00240	181	03350-00550	83	04710-04150	129
03310-00450	108	03320-00240	182	03350-00650	181	04710-04150	130
03320-00110	84	03320-00240	182	03350-00650	186	04710-04170	129
03320-00140	114	03320-00240	186	03350-00650	192	04710-04170	130
03320-00140	115	03320-00240	187	03350-00650	197	04710-04190	129
03320-00140	128	03320-00240	187	03350-00650	204	04710-06018	126
03320-00140	129	03320-00240	187	03350-00850	136	04710-06020	126
03320-00140	130	03320-00240	192	03350-00850	84	04710-06020	127
03320-00140	133	03320-00240	193	03350-00850	136A	04710-06097	126
03320-00180	125	03320-00240	193	03350-01100	185	04710-06102	126
03320-00180	125	03320-00240	197	03350-01100	196	04710-06113	156
03320-00180	156	03320-00240	198	03350-01250	180	04710-06113	161
03320-00180	161	03320-00240	198	03350-01250	209	04710-06113	166
03320-00180	166	03320-00240	198	03350-01400	180	04710-06113	171
03320-00180	171	03320-00240	204	03350-01400	191	04710-06113	176
03320-00180	176	03320-00240	205	03350-01400	203	04710-06113	211
03320-00180	182	03320-00240	205	03350-01400	215	04710-06113	217
03320-00180	182	03320-00240	211	03350-01400	221	04710-06113	223
03320-00180	182	03320-00240	211	03370-01100	185	04710-06120	127
03320-00180	182	03320-00240	211	03370-01100	196	04710-06147	126
03320-00180	187	03320-00240	211	04000-00200	114	04710-06410	134
03320-00180	187	03320-00240	211	04000-00200	115	04710-06440	134

PARTS NUMBER INDEX

Part No.	Fig.No.	Part No.	Fig.No.	Part No.	Fig.No.	Part No.	Fig.No.
04901-00100	70	04911-00030	131	04913-11100	20	06711-90016	73
04901-00100	70	04911-00030	132	04913-11100	20	06711-90016	74
04901-00100	70	04911-00030	132	04913-11200	18	06712-75016	77
04901-00160	153	04911-00030	134	04913-11200	19	06712-75016	77
04901-00160	158	04911-00032	156	04913-11200	20	06712-82515	73
04901-00160	163	04911-00032	161	04913-11200	65	06712-82515	74
04901-00160	168	04911-00032	166	04913-11200	65	06712-82515	74
04901-00160	173	04911-00032	171	04913-11200	66	06712-82515	77
04901-00160	178	04911-00032	176	04913-11380	174	06716-30015	73
04901-00160	184	04911-00032	182	04913-11380	201	06716-30015	73
04901-00160	189	04911-00032	187	04913-11380	220	06716-30015	74
04901-00160	195	04911-00032	193	04913-11380	154A	06716-30015	74
04901-00160	200	04911-00032	198	04913-11380	164A	06731-00120	77
04901-00160	207	04911-00032	205	04913-11380	179A	06731-00120	77
04901-00160	213	04911-00032	211	04913-11380	190A	06801-70012	81
04901-00160	219	04911-00032	217	04913-11380	208A	06801-90016	75
04901-00160	70	04911-00032	223	04913-11380	214A	06802-30015	75
04901-00160	70	04911-00044	9	04914-00019	96	06802-30015	75
04901-00160	70	04911-00048	9	05000-07001	18	06802-75016	78
04901-00160	70	04911-00048	10	05000-07001	19	06802-82515	75
04901-00160	70	04911-00050	7	05100-07001	18	06806-70012	81
04901-00160	70	04911-00050	8	05100-07001	19	06806-70012	81
04901-00160	71	04911-00050	8	06001-70012	79	06841-70012	82
04901-00190	70	04911-00050	11	06001-70012	80	06841-75016	78
04901-00190	70	04911-00050	12	06001-75016	77	06841-90016	76
04901-00190	70	04911-00053	125	06001-82515	74	06843-70012	82
04901-00190	71	04911-00055	125	06001-82515	77	06843-75016	78
04901-00190	89	04911-00055	7	06001-90016	73	06843-90016	76
04901-00190	90	04911-00055	8	06001-90016	74	06851-70012	82
04901-00191	136	04911-00060	7	06006-30015	73	06851-75016	78
04901-00191	136A	04911-00065	7	06006-30015	73	06851-90016	76
04911-00021	130	04911-00080	3	06006-30015	74	06853-70012	82
04911-00022	129	04911-00080	4	06006-30015	74	114A4-12001	64
04911-00022	129	04911-00085	3	06006-70012	79	114A4-12011	64
04911-00022	129	04911-00090	3	06006-70012	79	115G3-82041	55
04911-00022	129	04911-00090	4	06006-70012	80	115G3-82111	43
04911-00022	130	04911-00090	6	06006-70012	80	115G3-82111	46
04911-00022	130	04911-00095	3	06006-75016	77	115G3-82111	48
04911-00022	130	04911-00095	4	06006-75016	77	115G3-82651	43
04911-00022	150	04911-00095	5	06006-82515	73	116G4-10012	64
04911-00022	156	04911-00095	6	06006-82515	74	116G4-10013	64
04911-00022	161	04911-00095	6	06006-82515	77	116G4-10052	64
04911-00022	166	04911-00100	3	06701-70012	79	116G4-10053	64
04911-00022	171	04911-00100	4	06701-70012	80	116G4-12052	64
04911-00022	176	04911-00105	3	06701-75016	77	116G4-12053	64
04911-00022	211	04911-00105	4	06701-82515	73	12003-12021	43
04911-00022	217	04911-00110	3	06701-82515	74	12003-42052	44
04911-00022	223	04911-00110	4	06701-82515	74	12003-42061	44
04911-00022	1	04913-10100	18	06701-82515	77	12003-42421	44
04911-00022	35	04913-10100	19	06701-90016	73	12003-42451	44
04911-00022	36	04913-10100	20	06701-90016	74	12003-42461	44
04911-00022	36	04913-10200	18	06702-75016	77	12163-82232	47
04911-00024	142	04913-10200	19	06702-75016	77	12163-82232	49
04911-00028	142	04913-10200	20	06706-30015	73	12163-82541	133
04911-00028	143	04913-10200	24	06706-30015	73	12163-82541	43
04911-00028	143A	04913-10200	25	06706-30015	74	12163-82541	44
04911-00030	126	04913-11100	18	06706-30015	74	12163-82541	44
04911-00030	126	04913-11100	18	06711-70012	79	124T3-12013	43
04911-00030	127	04913-11100	19	06711-70012	80	124T3-12022	43
04911-00030	131	04913-11100	19	06711-75016	77	124T3-12031	43

PARTS NUMBER INDEX

Part No.	Fig.No.	Part No.	Fig.No.	Part No.	Fig.No.	Part No.	Fig.No.
124T3-12071	43	124T3-42751	50	124U3-80461	52	128E3-80231	52
124T3-12161	43	124T3-42761	45	124U3-82011	51	128E3-80241	52
124T3-12201	43	124T3-43001	45	124U3-82011	52	128E3-80251	49
124T3-12251	43	124T3-43001	50	124U3-82021	51	128E3-80251	53
124T3-12261	43	124T3-43021	45	124U3-82041	46	128E3-80261	53
124T3-40351	45	124T3-43021	50	124U3-82041	48	128E3-80441	53
124T3-40351	45	124T3-43041	45	124U3-82081	46	128E3-82002	48
124T3-40351	50	124T3-43041	47	124U3-82081	48	128E3-82021	49
124T3-40351	50	124T3-43041	49	124U3-82091	43	128E3-82061	52
124T3-40402	43	124T3-43051	43	124U3-82091	46	128E3-82101	53
124T3-42011	45	124T3-43051	44	124U3-82091	48	128E3-82191	53
124T3-42031	45	124T3-43071	44	124U3-82101	46	128E7-10201	108
124T3-42051	45	124T3-43081	44	124U3-82101	48	128E7-10201	108
124T3-42051	50	124T3-43091	45	124U3-82111	56	128E7-10201	109
124T3-42081	45	124T3-43101	45	124U3-82122	56	128E7-10201	109
124T3-42081	50	124T3-50001	60	124U3-82181	56	130C2-60301	23
124T3-42091	45	124T3-50201	60	124U3-82201	47	130C3-82731	54
124T3-42091	50	124T3-50202	60	124U3-82201	49	130C3-82731	55
124T3-42101	45	124T3-50351	60	124U3-82211	47	130C3-82741	55
124T3-42101	50	124T3-50381	60	124U3-82211	49	130C3-82751	54
124T3-42111	45	124T3-50501	60	124U3-82242	51	130C3-82751	55
124T3-42111	50	124T3-52021	60	124U3-82242	52	130C3-83011	54
124T3-42122	45	124T3-52051	60	124U3-82242	53	130C3-83011	55
124T3-42122	47	124T3-52071	60	124U3-82251	51	130C3-83041	55
124T3-42122	49	124T3-52081	60	124U3-82251	52	130C3-83081	55
124T3-42123	45	124T3-52091	60	124U3-82251	53	130C4-10201	65
124T3-42123	47	124T3-52101	60	124U3-82261	51	130C4-10201	65
124T3-42123	49	124T3-52111	60	124U3-82261	52	135C2-50001	41
124T3-42141	44	124T3-52121	60	124U3-82271	47	135C2-50001	43
124T3-42161	44	124T3-52131	60	124U3-82272	47	135C3-12001	43
124T3-42181	45	124T3-52181	60	124U3-82311	46	135C3-12002	43
124T3-42192	43	124T3-52191	60	124U3-82311	48	135C3-12011	43
124T3-42202	44	124T3-52201	60	124U3-82351	51	135C3-12021	45
124T3-42241	44	124T3-52211	60	124U3-82351	52	135C3-12031	43
124T3-42301	45	124T3-52221	60	124U3-82351	53	135C3-12051	43
124T3-42311	45	124T3-52231	60	124U3-82361	51	135C3-12061	43
124T3-42331	45	124T3-52241	60	124U3-82361	52	135C3-12071	43
124T3-42331	50	124T3-52261	60	124U3-82361	53	135C3-12081	43
124T3-42381	45	124T3-52271	60	124U3-82411	47	135C3-12111	43
124T3-42421	45	124T3-52281	60	124U3-82411	49	135C3-12201	43
124T3-42421	45	124T3-52291	60	124U3-82421	47	135C3-42001	45
124T3-42421	50	124T3-52301	60	124U3-82421	49	135C3-42011	43
124T3-42421	50	124T3-52321	60	124U3-82431	46	135C3-42021	45
124T3-42431	45	124T3-52351	60	124U3-82431	48	135C3-42041	43
124T3-42431	45	124T3-52381	58	124U3-82481	56	135C3-42051	43
124T3-42431	50	124T3-52381	59	124U3-82501	46	135C3-42061	44
124T3-42431	50	124T3-52401	60	124U3-82521	43	135C3-42101	44
124T3-42471	44	124T3-52411	60	124U3-82521	46	135C7-10021	108
124T3-42481	45	124T3-59801	60	124U3-82521	48	135C7-10021	108
124T3-42491	45	124U3-80221	46	124U3-82541	46	135C7-10021	109
124T3-42491	50	124U3-80221	48	124U3-82541	48	135C7-10021	109
124T3-42501	45	124U3-80221	56	124W7-10301	108	135E2-50001	42
124T3-42531	44	124U3-80251	47	124W7-10301	108	135E2-50001	46
124T3-42651	47	124U3-80251	51	124W7-10301	109	135E2-50051	42
124T3-42661	47	124U3-80261	51	124W7-10301	109	135E2-50051	46
124T3-42681	44	124U3-80281	56	124W7-10351	109	135E3-80101	46
124T3-42711	44	124U3-80401	46	125Y3-82101	51	135E3-80101	48
124T3-42721	44	124U3-80412	56	125Y3-82101	52	135E3-80102	46
124T3-42731	45	124U3-80422	56	125Y3-82101	53	135E3-80161	47
124T3-42751	45	124U3-80461	51	128E3-80231	49	135E3-80201	47

PARTS NUMBER INDEX

Part No.	Fig.No.	Part No.	Fig.No.	Part No.	Fig.No.	Part No.	Fig.No.
135E3-80201	54	135N2-62011	23	15943-82431	51	20314-30161	70
135E3-80301	47	135N3-80201	49	15943-82431	52	20314-30161	70
135E3-80301	51	135N3-80201	55	15943-82471	51	20314-30161	70
135E3-80401	54	135N3-82001	55	15943-82471	52	20314-30161	71
135E3-80411	54	13913-52081	60	15943-82471	53	20317-60331	126
135E3-80411	55	14354-12271	64	15943-82481	51	20317-60331	11
135E3-82011	54	14603-52131	60	15943-82481	52	205A2-63311	23
135E3-82021	54	15573-42011	45	15943-82481	53	205A2-63311	40
135E3-82021	55	15573-42011	45	15943-82491	51	20712-40275	20
135E3-82031	54	15573-42011	50	15943-82491	52	20801-03091	5
135E3-82041	54	15573-42011	50	15943-82491	53	20801-03391	4
135E3-82051	54	15573-42151	43	15943-82501	51	20802-42161	18
135E3-82051	55	15573-42151	44	15943-82501	52	20802-42161	19
135E3-82081	46	15573-42151	58	15943-82501	53	20803-71011	61
135E3-82081	46	15573-42151	59	15943-82511	51	20803-71011	61A
135E3-82081	48	15583-82051	54	15943-82511	52	20803-71021	61
135E3-82081	48	15583-82051	55	15943-82511	53	20803-71021	61A
135E3-82191	51	15583-82521	46	15943-82641	54	20803-71101	61
135E3-82191	52	15583-82521	48	15943-82641	55	20803-71101	61A
135E3-82191	53	15583-82531	133	15943-82651	54	20959-30302	22
135E3-82201	51	15583-82551	44	15943-82651	55	20959-30302	28
135E3-82201	52	15583-82561	44	15943-82661	54	20959-30302	29
135E3-82201	53	15594-12251	64	15943-82661	55	20959-30302	29
135H2-50001	42	15793-82711	54	15943-82701	56	20959-30302	29
135H2-50001	48	15793-82711	55	15943-82741	54	20959-30302	29
135H2-50051	42	15793-82721	54	15943-82741	55	20959-30302	30
135H2-50051	48	15793-82721	55	15943-82751	54	210F2-42051	154
135H2-60201	19	15793-82861	54	15943-82751	55	210F2-42051	159
135H2-60201	23	15793-82861	55	15943-82761	54	210F2-42051	179
135H2-62011	23	15843-52071	60	15943-82761	55	210F2-42051	208
135H3-80121	48	15843-52081	60	15943-82771	54	210F2-42071	154
135H3-80161	49	15843-52091	60	15943-82771	55	210F2-42071	159
135H3-80201	49	15843-52171	60	15943-82781	54	210F2-42071	179
135H3-80201	55	15913-42511	45	15943-82781	55	210F2-42071	208
135H3-80301	49	15913-42511	50	15943-82791	54	210F9-12051	137
135H3-80301	52	15943-80261	51	15943-82791	55	211F8-22261	181
135H3-80311	49	15943-80261	52	15943-82801	54	211F8-22261	186
135H3-80311	53	15943-80261	53	15943-82801	55	211F8-22261	192
135H3-80401	55	15943-82271	46	15943-82881	54	211F8-22261	197
135H3-82011	55	15943-82271	48	15943-82881	55	211F8-22271	181
135H3-82031	54	15943-82281	46	15943-83311	19	211F8-22271	186
135H3-82031	55	15943-82281	48	15943-83311	20	211F8-22271	192
135H3-82041	54	15943-82291	46	15953-52091	60	211F8-22271	197
135H3-82041	55	15943-82291	48	16382-55091	55	21152-42091	19
135H3-82061	55	15943-82301	46	16402-54331	25	21152-42091	20
135L2-50001	42	15943-82301	48	16402-54331	47	21152-42091	20
135L2-50001	46	15943-82311	46	173A2-65121	63	21159-12501	137
135L2-50051	42	15943-82311	48	17912-52141	88	21162-42011	134
135L2-50051	46	15943-82391	51	19502-52501	44	212T9-12031	138
135L3-80201	47	15943-82391	52	201B2-32111	15	21232-32551	13
135L3-80201	54	15943-82391	53	201B2-32111	16	21232-32551	14
135L3-82001	54	15943-82401	51	201B2-32121	15	21232-32551	15
135L3-82001	55	15943-82401	52	201B2-32121	16	21232-32551	16
135N2-50001	42	15943-82401	53	201C3-82081	108	21232-42142	20
135N2-50001	48	15943-82411	51	20224-30061	70	21236-82031	104
135N2-50051	42	15943-82411	52	20224-30061	70	21236-82041	104
135N2-50051	48	15943-82411	53	20224-30061	70	21236-82051	104
135N2-60201	20	15943-82421	51	20233-50281	60	21237-52051	95
135N2-60201	23	15943-82421	52	20313-50071	60	21237-52062	95
135N2-60301	23	15943-82421	53	20313-50091	60	21239-12011	137

PARTS NUMBER INDEX

Part No.	Fig.No.	Part No.	Fig.No.	Part No.	Fig.No.	Part No.	Fig.No.
21239-12011	138	214A4-12161	64	214A8-02721	138	214A8-52051	136
21239-12011	138	214A5-22001	87	214A8-02721	138	214A8-52051	71
21239-12011	138	214A5-22001	88	214A8-02721	138	214A8-52051	136A
21239-12011	138	214A5-22051	87	214A8-02721	138	214A9-20101	139
21239-12501	137	214A5-22051	88	214A8-02721	138	214A9-20101	139
21240-52131	146	214A5-52121	94	214A8-12021	152	214A9-20101	139
21240-52131	146	214A5-52131	94	214A8-12021	157	214A9-20101	140
214A0-82831	155	214A5-52241	94	214A8-12021	162	214J0-81282	181
214A0-82831	160	214A5-53001	94	214A8-12021	167	214J8-11001	152
214A0-82831	165	214A5-53011	137	214A8-12021	172	214J8-11001	157
214A0-82831	170	214A5-53031	94	214A8-12021	177	214J8-11001	162
214A0-82831	181	214A6-42252	39	214A8-12021	183	214J8-11001	167
214A0-82831	186	214A6-42252	99	214A8-12021	188	214J8-11001	177
214A0-82831	192	214A6-42252	99	214A8-12021	194	214J8-11001	183
214A0-82831	197	214A6-42481	148	214A8-12021	199	214J8-11001	188
214A0-82831	210	214A6-42771	21	214A8-12021	206	214J8-11001	194
214A0-82831	216	214A6-42771	24	214A8-12021	212	214J8-11001	206
214A2-12001	7	214A6-42771	25	214A8-12021	218	214J8-11001	212
214A2-12001	8	214A6-42771	25	214A8-42631	155	214J8-11002	152
214A2-12001	13	214A6-42771	38	214A8-42631	155	214J8-11002	157
214A2-12001	14	214A6-42771	39	214A8-42631	160	214J8-11002	162
214A2-12011	7	214A7-42071	116	214A8-42631	160	214J8-11002	167
214A2-12011	8	214A7-42071	116	214A8-42631	165	214J8-11002	177
214A2-12021	7	214A7-42071	117	214A8-42631	165	214J8-11002	183
214A2-12021	8	214A7-42071	117	214A8-42631	170	214J8-11002	188
214A2-12111	7	214A7-42071	117	214A8-42631	170	214J8-11002	194
214A2-12111	8	214A7-42071	118	214A8-42631	175	214J8-11002	206
214A2-12121	7	214A7-42071	118	214A8-42631	175	214J8-11002	212
214A2-12121	8	214A7-42071	118	214A8-42631	181	214J8-12001	152
214A2-12141	7	214A7-42071	118	214A8-42631	186	214J8-12001	157
214A2-12141	8	214A7-42071	119	214A8-42631	192	214J8-12001	162
214A2-40202	20	214A7-42071	119	214A8-42631	197	214J8-12001	167
214A2-40202	22	214A7-42071	119	214A8-42631	204	214J8-12001	177
214A2-40401	18	214A7-42071	119	214A8-42631	210	214J8-12001	183
214A2-40401	19	214A7-42071	119	214A8-42631	216	214J8-12001	188
214A2-40401	20	214A7-42181	116	214A8-42631	222	214J8-12001	194
214A2-40501	27	214A7-42181	116	214A8-42631	222	214J8-12001	206
214A2-40501	31	214A7-42181	117	214A8-43081	156	214J8-12001	212
214A2-40501	32	214A7-42181	117	214A8-43081	161	214J8-12011	199
214A2-42141	137	214A7-42181	118	214A8-43081	166	214J8-12011	218
214A2-42141	138	214A7-42181	118	214A8-43081	171	214J8-12031	152
214A2-42161	22	214A7-42181	119	214A8-43081	176	214J8-12031	157
214A2-42162	22	214A7-42181	119	214A8-43081	182	214J8-12031	162
214A2-42311	27	214A7-42191	116	214A8-43081	187	214J8-12031	167
214A2-42331	18	214A7-42191	117	214A8-43081	193	214J8-12031	172
214A2-42331	19	214A7-42191	118	214A8-43081	198	214J8-12031	177
214A2-42331	20	214A7-42191	119	214A8-43081	205	214J8-12031	183
214A2-43081	208A	214A7-42201	116	214A8-44151	156	214J8-12031	188
214A2-43121	154	214A7-42201	117	214A8-44151	161	214J8-12031	194
214A2-43121	159	214A7-42201	118	214A8-44151	166	214J8-12031	199
214A2-43121	179	214A7-42201	119	214A8-44151	171	214J8-12031	206
214A2-43121	208	214A7-62331	129	214A8-44151	176	214J8-12031	212
214A2-43131	154	214A7-62341	129	214A8-44151	182	214J8-12031	218
214A2-43131	159	214A8-02701	138	214A8-44151	187	214J8-42472	181
214A2-43131	179	214A8-02701	138	214A8-44151	193	214J8-42561	181
214A2-43131	208	214A8-02711	138	214A8-44151	198	214J8-42581	181
214A2-44001	34	214A8-02711	138	214A8-44151	205	214J8-46001	181
214A2-44041	34	214A8-02711	138	214A8-44151	211	214L2-52001	41
214A2-52002	57	214A8-02711	138	214A8-44151	217	214L7-62041	130
214A2-52012	57	214A8-02711	138	214A8-44151	223	214T2-42311	18

PARTS NUMBER INDEX

Part No.	Fig.No.	Part No.	Fig.No.	Part No.	Fig.No.	Part No.	Fig.No.
214T2-42311	19	216G2-43581	22	216G6-43601	102	22198-22341	162
214T2-42311	20	216G2-43591	22	216G6-52151	103	22198-22341	162
214T2-42321	18	216G2-43592	22	216G6-52301	103	22198-22341	167
214T2-42321	19	216G2-43601	22	216G6-82121	104	22198-22341	167
214T2-42321	20	216G2-43611	22	216G7-52121	96	22198-22341	167
215E2-22021	11	216G4-10101	64	216G7-52201	96	22198-22341	167
215E2-22021	12	216G4-10201	68	216G8-53011	136A	22198-22341	172
215E2-22041	11	216G4-12072	65	216G8-53051	136A	22198-22341	172
215E2-22041	12	216G4-12072	65	216G9-10101	137	22198-22341	177
215E4-12231	64	216G4-12091	21	216G9-12052	137	22198-22341	177
215E5-42131	90	216G4-12101	64	216G9-12062	137	22198-22341	177
215E5-42141	90	216G4-12111	64	216G9-12131	137	22198-22341	177
215E5-42151	90	216G4-12151	64	216G9-12131	138	22198-22341	177
216G2-22051	9	216G4-12161	64	216G9-12131	138	22198-22341	183
216G2-22051	10	216G4-12171	64	216H3-92171	100	22198-22341	183
216G2-22202	96	216G4-12181	64	216H3-92281	116	22198-22341	188
216G2-22202	97	216G4-12201	21	216H3-92281	117	22198-22341	188
216G2-22211	9	216G4-12211	21	216H3-92281	118	22198-22341	188
216G2-22211	10	216G4-12231	21	216H3-92281	119	22198-22341	188
216G2-40602	20	216G4-12251	65	216H5-42141	100	22198-22341	188
216G2-40602	22	216G4-12251	65	217G2-42021	18	22198-22341	194
216G2-40701	20	216G4-12571	68	217G2-42021	19	22198-22341	194
216G2-40701	22	216G4-12601	68	217G2-42021	20	22198-22341	199
216G2-40711	22	216G4-12611	68	22018-30261	185	22198-22341	199
216G2-40721	22	216G4-12621	68	22018-30261	196	22198-22341	199
216G2-40731	22	216G4-12631	68	221A1-12001	21	22198-22341	199
216G2-40731	22	216G4-12641	68	221A2-42031	100	22198-22341	206
216G2-40801	18	216G4-12651	68	22117-60161	135	22198-22341	206
216G2-40801	19	216G4-12661	68	22119-20012	139	22198-22341	206
216G2-40801	20	216G4-12671	68	22119-20012	140	22198-22341	206
216G2-42131	18	216G4-12681	68	22132-40041	22	22198-22341	206
216G2-42131	19	216G4-12711	68	22132-40202	22	22198-22341	212
216G2-42131	20	216G4-12741	68	22132-40202	28	22198-22341	212
216G2-42302	18	216G4-12751	68	22132-40202	29	22198-22341	212
216G2-42302	20	216G4-12761	68	22132-40202	29	22198-22341	212
216G2-43111	18	216G5-22081	100	22132-40202	29	22198-22341	212
216G2-43111	19	216G5-42261	24	22132-40202	30	22198-22341	218
216G2-43111	20	216G5-42261	25	22192-12111	7	22198-22341	218
216G2-43161	17	216G5-42261	25	22192-12111	8	22199-12401	70
216G2-43201	17	216G5-42261	38	22192-12121	7	22199-12401	70
216G2-43221	17	216G6-32101	98	22192-12121	8	22199-12401	70
216G2-43231	17	216G6-41001	100	22192-22091	10	22199-12401	70
216G2-43241	17	216G6-42351	100	22192-22091	12	22199-12401	70
216G2-43251	17	216G6-42401	100	22192-42301	20	22199-12401	70
216G2-43251	17	216G6-42451	100	22192-42411	22	22199-12401	70
216G2-43261	17	216G6-42481	100	22193-03001	58	22199-12401	70
216G2-43271	17	216G6-42541	100	22193-03001	59	22199-12401	70
216G2-43281	17	216G6-42752	103	22197-60231	66	22199-12401	89
216G2-43281	17	216G6-42762	103	22198-22341	152	22199-12401	90
216G2-43291	17	216G6-42911	101	22198-22341	152	22199-22001	139
216G2-43291	17	216G6-42911	102	22198-22341	152	22199-22001	140
216G2-43301	17	216G6-42911	148	22198-22341	152	22199-22261	139
216G2-43511	22	216G6-42921	101	22198-22341	152	22199-22261	140
216G2-43521	22	216G6-42921	102	22198-22341	157	222A2-42031	17
216G2-43531	22	216G6-42921	148	22198-22341	157	222A2-42031	17
216G2-43542	22	216G6-42931	101	22198-22341	157	222A2-42031	17
216G2-43551	22	216G6-42931	102	22198-22341	157	222A2-42031	17
216G2-43561	22	216G6-42931	148	22198-22341	157	222A2-42031	17
216G2-43562	22	216G6-43501	100	22198-22341	162	222A2-42031	17
216G2-43571	22	216G6-43601	101	22198-22341	162	222A2-42031	17

PARTS NUMBER INDEX

Part No.	Fig.No.	Part No.	Fig.No.	Part No.	Fig.No.	Part No.	Fig.No.
222A2-42031	17	22252-42001	22	224T0-40132	178	224T0-50062	180
222A2-42031	21	22256-42001	100	224T0-40141	178	224T0-50071	180
222A2-42331	17	223W1-00112	2	224T0-40142	178	224T0-50072	180
222A2-42331	17	223W2-22031	10	224T0-40151	178	224T0-50081	180
222A2-42331	17	223W2-32021	14	224T0-40152	178	224T0-50082	180
222A2-42331	17	223W2-42051	20	224T0-40161	178	224T0-50091	180
222A2-42331	17	223W2-42081	20	224T0-40162	178	224T0-50092	180
222A2-42341	17	223W2-42091	20	224T0-40201	178	224T0-50101	180
222A2-42361	17	223W2-50111	46	224T0-40202	178	224T0-50102	180
222A2-42401	17	223W2-50111	48	224T0-40211	178	224T0-50111	180
222A2-42401	17	223W5-22081	87	224T0-40212	178	224T0-50112	180
222A2-42511	18	223W5-22081	88	224T0-40221	178	224T0-50121	180
222A2-42511	19	223W5-22101	87	224T0-40222	178	224T0-50122	180
222A2-42511	28	223W5-22101	88	224T0-40231	178	224T0-50201	180
222A2-42511	29	223W7-62052	125	224T0-40232	178	224T0-50211	180
222A2-42511	29	22314-40101	79	224T0-40241	178	224T0-50221	180
222A2-42511	30	22314-40101	80	224T0-40242	178	224T0-50231	180
222A5-52111	94	22314-40101	80	224T0-40251	178	224T0-50241	180
222A6-42451	101	22314-40101	81	224T0-40252	178	224T0-50251	180
222A6-42451	102	22314-40101	82	224T0-40261	178	224T0-50261	180
222A6-42451	102	22354-42001	79	224T0-40262	178	224T0-50271	180
222A6-42451	102	22354-42001	80	224T0-40271	178	224T0-50281	180
222A6-42461	101	22354-42001	80	224T0-40272	178	224T0-50291	180
222A6-42461	101	22354-42001	81	224T0-40281	178	224T0-50301	180
222A6-42461	101	22354-42001	82	224T0-40282	178	224T0-50311	180
222A6-42461	102	22354-42011	79	224T0-40291	178	224T0-50321	180
222A6-42461	102	22354-42011	80	224T0-40292	178	224T0-50401	180
222A6-42461	102	22354-42011	80	224T0-40301	178	224T0-50411	180
222A9-32011	174	22354-42011	81	224T0-40302	178	224T0-50421	180
222A9-32011	201	22354-42011	82	224T0-40311	178	224T0-50431	180
222A9-32011	220	224C0-59811	192	224T0-40312	178	224T0-50441	180
222A9-32011	85	224C0-59811	197	224T0-40321	178	224T0-50451	180
222A9-32011	85	224C0-59811	204	224T0-40322	178	224T0-50461	180
222A9-32011	154A	224T0-40001	178	224T0-40331	178	224T0-50471	180
222A9-32011	164A	224T0-40002	178	224T0-40332	178	224T0-50481	180
222A9-32011	179A	224T0-40011	178	224T0-40341	178	224T0-50491	180
222A9-32011	190A	224T0-40012	178	224T0-40342	178	224T0-50501	180
222A9-32011	208A	224T0-40021	178	224T0-40351	178	224T0-50511	180
222A9-32011	214A	224T0-40022	178	224T0-40352	178	224T0-50521	180
222W9-12201	138	224T0-40031	178	224T0-40361	178	224T0-50601	181
222W9-12211	138	224T0-40032	178	224T0-40362	178	224T0-50611	181
22214-30321	70	224T0-40041	178	224T0-43001	178	224T0-50621	181
22214-30321	70	224T0-40042	178	224T0-43001	189	224T0-50631	181
22214-30321	70	224T0-40051	178	224T0-43001	200	224T0-50641	181
22216-30051	98	224T0-40052	178	224T0-43051	178	224T0-50651	181
22250-52931	180	224T0-40061	178	224T0-43051	189	224T0-50661	181
22250-52931	209	224T0-40062	178	224T0-43051	200	224T0-50671	181
22252-32241	125	224T0-40071	178	224T0-50001	180	224T0-50681	181
22252-32241	13	224T0-40072	178	224T0-50002	180	224T0-50691	181
22252-32241	13	224T0-40081	178	224T0-50011	180	224T0-50701	181
22252-32241	14	224T0-40082	178	224T0-50012	180	224T0-50711	181
22252-32241	14	224T0-40091	178	224T0-50021	180	224T0-50721	181
22252-32241	15	224T0-40092	178	224T0-50022	180	224T0-50731	181
22252-32241	16	224T0-40101	178	224T0-50031	180	224T0-50741	181
22252-32251	7	224T0-40102	178	224T0-50032	180	224T0-50751	181
22252-32251	8	224T0-40111	178	224T0-50041	180	224T0-50761	181
22252-32251	13	224T0-40112	178	224T0-50042	180	224T0-50801	181
22252-32251	14	224T0-40121	178	224T0-50051	180	224T0-50811	181
22252-32251	15	224T0-40122	178	224T0-50052	180	224T0-50821	181
22252-32251	16	224T0-40131	178	224T0-50061	180	224T0-50831	181

PARTS NUMBER INDEX

Part No.	Fig.No.	Part No.	Fig.No.	Part No.	Fig.No.	Part No.	Fig.No.
224T0-50841	181	224T0-51551	181	224T0-60141	205	224T0-70401	207
224T0-50851	181	224T0-51561	181	224T0-60151	182	224T0-70411	207
224T0-50861	181	224T0-51601	181	224T0-60151	193	224T0-70421	207
224T0-50871	181	224T0-51611	181	224T0-60161	182	224T0-70431	207
224T0-50881	181	224T0-51621	181	224T0-60161	193	224T0-70441	207
224T0-50891	181	224T0-51631	181	224T0-60161	205	224T0-70451	207
224T0-50901	181	224T0-51641	181	224T0-60171	182	224T0-70461	207
224T0-50911	181	224T0-51651	181	224T0-60171	193	224T0-70471	207
224T0-50921	181	224T0-51661	181	224T0-60181	182	224T0-70481	207
224T0-50931	181	224T0-51671	181	224T0-60181	193	224T0-70491	207
224T0-50941	181	224T0-51681	181	224T0-60191	182	224T0-70501	207
224T0-50951	181	224T0-51691	181	224T0-60191	193	224T0-70511	207
224T0-50961	181	224T0-51701	181	224T0-60191	205	224T0-73031	207
224T0-51001	181	224T0-51711	181	224T0-60201	182	224T0-73031	213
224T0-51011	181	224T0-51721	181	224T0-60201	193	224T0-73031	219
224T0-51021	181	224T0-51731	181	224T0-60211	182	224T0-73121	207
224T0-51031	181	224T0-51741	181	224T0-60211	193	224T0-73121	213
224T0-51041	181	224T0-51751	181	224T0-60211	205	224T0-73121	219
224T0-51051	181	224T0-51761	181	224T0-60221	182	224T0-73301	207
224T0-51061	181	224T0-53011	181	224T0-60221	193	224T0-73301	210
224T0-51071	181	224T0-53031	181	224T0-60221	205	224T0-73301	213
224T0-51081	181	224T0-53301	181	224T0-60231	182	224T0-73301	216
224T0-51091	181	224T0-53301	186	224T0-60231	193	224T0-73301	222
224T0-51101	181	224T0-53301	192	224T0-60231	205	224T0-80001	209
224T0-51111	181	224T0-53301	197	224T0-60241	182	224T0-80002	209
224T0-51121	181	224T0-53301	204	224T0-60241	193	224T0-80011	209
224T0-51131	181	224T0-53311	181	224T0-60241	205	224T0-80012	209
224T0-51141	181	224T0-53311	186	224T0-60251	182	224T0-80021	180
224T0-51151	181	224T0-53311	192	224T0-60251	193	224T0-80021	209
224T0-51201	181	224T0-53311	197	224T0-60261	182	224T0-80022	180
224T0-51211	181	224T0-53311	204	224T0-60261	193	224T0-80022	209
224T0-51221	181	224T0-53361	180	224T0-61001	177	224T0-80031	180
224T0-51231	181	224T0-53361	191	224T0-62201	182	224T0-80031	209
224T0-51241	181	224T0-53361	203	224T0-62201	193	224T0-80032	180
224T0-51251	181	224T0-53371	180	224T0-62201	205	224T0-80032	209
224T0-51261	181	224T0-53371	191	224T0-62501	182	224T0-80041	209
224T0-51281	181	224T0-53371	203	224T0-70001	207	224T0-80042	209
224T0-51291	181	224T0-53401	181	224T0-70011	207	224T0-80051	180
224T0-51301	181	224T0-53451	180	224T0-70021	207	224T0-80051	209
224T0-51311	181	224T0-53451	191	224T0-70031	207	224T0-80052	180
224T0-51321	181	224T0-53451	203	224T0-70041	207	224T0-80052	209
224T0-51331	181	224T0-53451	209	224T0-70051	207	224T0-80061	209
224T0-51341	181	224T0-53451	215	224T0-70061	207	224T0-80062	209
224T0-51351	181	224T0-53451	221	224T0-70071	207	224T0-80071	180
224T0-51361	181	224T0-59801	180	224T0-70081	207	224T0-80071	209
224T0-51401	181	224T0-59801	209	224T0-70091	207	224T0-80072	180
224T0-51411	181	224T0-59811	181	224T0-70101	207	224T0-80072	209
224T0-51421	181	224T0-60001	177	224T0-70111	207	224T0-80081	209
224T0-51431	181	224T0-60101	182	224T0-70201	207	224T0-80082	209
224T0-51441	181	224T0-60101	193	224T0-70211	207	224T0-80091	209
224T0-51451	181	224T0-60101	205	224T0-70221	207	224T0-80092	209
224T0-51461	181	224T0-60111	182	224T0-70231	207	224T0-80101	209
224T0-51471	181	224T0-60111	193	224T0-70241	207	224T0-80102	209
224T0-51481	181	224T0-60121	182	224T0-70251	207	224T0-80111	209
224T0-51491	181	224T0-60121	193	224T0-70261	207	224T0-80112	209
224T0-51501	181	224T0-60131	182	224T0-70271	207	224T0-80201	209
224T0-51511	181	224T0-60131	193	224T0-70281	207	224T0-80211	209
224T0-51521	181	224T0-60131	205	224T0-70291	207	224T0-80221	180
224T0-51531	181	224T0-60141	182	224T0-70301	207	224T0-80221	209
224T0-51541	181	224T0-60141	193	224T0-70311	207	224T0-80231	180

PARTS NUMBER INDEX

Part No.	Fig.No.	Part No.	Fig.No.	Part No.	Fig.No.	Part No.	Fig.No.
224T0-80231	209	224T0-81482	210	224T0-83361	210	224T8-02101	211
224T0-80241	209	224T0-81492	210	224T0-83361	216	224T8-02101	217
224T0-80251	180	224T0-81502	210	224T0-90001	206	224T8-02101	223
224T0-80251	209	224T0-81512	210	224T0-91001	211	224T8-02111	211
224T0-80261	209	224T0-81602	210	224T0-91001	217	224T8-02111	217
224T0-80271	180	224T0-81612	210	224T0-91001	223	224T8-02111	223
224T0-80271	209	224T0-81622	210	224T0-91011	182	224T8-02201	153
224T0-80281	209	224T0-81632	210	224T0-91011	193	224T8-02201	158
224T0-80291	209	224T0-81642	210	224T0-91011	205	224T8-02201	163
224T0-80301	209	224T0-81652	210	224T0-91011	211	224T8-02201	168
224T0-80311	209	224T0-81662	210	224T0-91101	206	224T8-02201	173
224T0-80401	209	224T0-81672	210	224T0-92231	211	224T8-02201	178
224T0-80411	209	224T0-81682	210	224T0-92231	217	224T8-02201	184
224T0-80421	180	224T0-81692	210	224T0-92231	223	224T8-02201	189
224T0-80421	209	224T0-81702	210	224T0-92301	211	224T8-02201	195
224T0-80431	180	224T0-81712	210	224T0-93111	211	224T8-02201	200
224T0-80431	209	224T0-81801	210	224T0-93121	211	224T8-02201	207
224T0-80441	209	224T0-81811	210	224T0-93131	211	224T8-02201	213
224T0-80451	180	224T0-81821	210	224T0-93131	223	224T8-02201	219
224T0-80451	209	224T0-81831	210	224T0-93141	211	224T8-20001	152
224T0-80461	209	224T0-81841	210	224T0-93151	211	224T8-20001	157
224T0-80471	180	224T0-81851	210	224T0-93161	211	224T8-21001	152
224T0-80471	209	224T0-81861	210	224T0-93171	211	224T8-21001	157
224T0-80481	209	224T0-81871	210	224T0-93181	211	224T8-22301	152
224T0-80491	209	224T0-81881	210	224T0-93191	211	224T8-22301	157
224T0-80501	209	224T0-81891	210	224T0-93201	211	224T8-22301	162
224T0-80511	209	224T0-81901	210	224T0-93211	211	224T8-22301	167
224T0-81001	210	224T0-81911	210	224T0-93221	211	224T8-22301	177
224T0-81011	210	224T0-82421	180	224T0-93301	207	224T8-22301	183
224T0-81021	210	224T0-82421	209	224T0-93311	207	224T8-22301	188
224T0-81031	210	224T0-82501	180	224T0-93341	207	224T8-22301	194
224T0-81041	210	224T0-82501	209	224T0-93351	207	224T8-22301	206
224T0-81051	210	224T0-82511	180	224T0-93361	207	224T8-22301	212
224T0-81061	210	224T0-82511	209	224T0-93371	207	224T8-22601	152
224T0-81071	210	224T0-82521	180	224T0-93401	207	224T8-22601	157
224T0-81081	210	224T0-82521	209	224T0-93411	207	224T8-22601	162
224T0-81091	210	224T0-82531	180	224T4-30201	70	224T8-22601	167
224T0-81101	210	224T0-82531	209	224T4-30201	70	224T8-22601	177
224T0-81111	210	224T0-82541	180	224T4-30201	70	224T8-22601	188
224T0-81201	210	224T0-82541	209	224T8-02001	153	224T8-22601	206
224T0-81211	210	224T0-82561	180	224T8-02001	158	224T8-22601	212
224T0-81221	210	224T0-82561	185	224T8-02001	163	224T8-22611	152
224T0-81231	210	224T0-82561	191	224T8-02001	168	224T8-22611	157
224T0-81241	210	224T0-82561	196	224T8-02001	173	224T8-22611	162
224T0-81251	210	224T0-82561	203	224T8-02001	178	224T8-22611	167
224T0-81261	210	224T0-82561	209	224T8-02001	184	224T8-22611	177
224T0-81271	181	224T0-82561	215	224T8-02001	189	224T8-22611	188
224T0-81271	210	224T0-82561	221	224T8-02001	195	224T8-22611	206
224T0-81281	210	224T0-83301	210	224T8-02001	200	224T8-22611	212
224T0-81291	210	224T0-83301	216	224T8-02001	207	224T8-22621	152
224T0-81301	210	224T0-83311	210	224T8-02001	213	224T8-22621	157
224T0-81311	210	224T0-83311	216	224T8-02001	219	224T8-22621	162
224T0-81402	210	224T0-83321	210	224T8-02101	156	224T8-22621	167
224T0-81412	210	224T0-83321	216	224T8-02101	161	224T8-22621	177
224T0-81422	210	224T0-83331	210	224T8-02101	166	224T8-22621	188
224T0-81432	210	224T0-83331	216	224T8-02101	171	224T8-22621	206
224T0-81442	210	224T0-83341	210	224T8-02101	176	224T8-22621	212
224T0-81452	210	224T0-83341	216	224T8-02101	182	224T8-22631	152
224T0-81462	210	224T0-83351	210	224T8-02101	193	224T8-22631	157
224T0-81472	210	224T0-83351	216	224T8-02101	205	224T8-22631	162

PARTS NUMBER INDEX

Part No.	Fig.No.	Part No.	Fig.No.	Part No.	Fig.No.	Part No.	Fig.No.
224T8-22631	167	224T8-30302	153	224T8-40232	160	224T8-40561	160
224T8-22631	177	224T8-30311	153	224T8-40242	155	224T8-40612	160
224T8-22631	188	224T8-30312	153	224T8-40242	160	224T8-41002	156
224T8-22631	206	224T8-30321	153	224T8-40252	155	224T8-41002	161
224T8-22631	212	224T8-30322	153	224T8-40252	160	224T8-41002	182
224T8-30001	153	224T8-30331	153	224T8-40262	155	224T8-41002	211
224T8-30002	153	224T8-30332	153	224T8-40262	160	224T8-42402	155
224T8-30011	153	224T8-30341	153	224T8-40272	155	224T8-42402	160
224T8-30012	153	224T8-30342	153	224T8-40272	160	224T8-42402	210
224T8-30021	153	224T8-30351	153	224T8-40282	155	224T8-42412	155
224T8-30022	153	224T8-30352	153	224T8-40282	160	224T8-42412	160
224T8-30031	153	224T8-30361	153	224T8-40292	155	224T8-42412	210
224T8-30032	153	224T8-30362	153	224T8-40292	160	224T8-42471	155
224T8-30041	153	224T8-31111	153	224T8-40302	155	224T8-42471	160
224T8-30042	153	224T8-31111	163	224T8-40302	160	224T8-42471	165
224T8-30051	153	224T8-31111	173	224T8-40312	155	224T8-42471	170
224T8-30052	153	224T8-31111	178	224T8-40312	160	224T8-42471	175
224T8-30061	153	224T8-31111	189	224T8-40322	155	224T8-42471	210
224T8-30062	153	224T8-31111	200	224T8-40322	160	224T8-42471	216
224T8-30071	153	224T8-40001	155	224T8-40332	155	224T8-42471	222
224T8-30072	153	224T8-40001	160	224T8-40332	160	224T8-42481	155
224T8-30081	153	224T8-40011	155	224T8-40342	155	224T8-42481	160
224T8-30082	153	224T8-40011	160	224T8-40342	160	224T8-42481	165
224T8-30091	153	224T8-40021	155	224T8-40352	155	224T8-42481	170
224T8-30092	153	224T8-40021	160	224T8-40352	160	224T8-42481	175
224T8-30101	153	224T8-40031	155	224T8-40362	155	224T8-42501	210
224T8-30102	153	224T8-40031	160	224T8-40362	160	224T8-42512	210
224T8-30111	153	224T8-40041	155	224T8-40401	155	224T8-42512	216
224T8-30112	153	224T8-40041	160	224T8-40401	160	224T8-42512	222
224T8-30121	153	224T8-40051	155	224T8-40411	155	224T8-42521	155
224T8-30122	153	224T8-40051	160	224T8-40411	160	224T8-42521	160
224T8-30131	153	224T8-40061	155	224T8-40421	155	224T8-42521	210
224T8-30132	153	224T8-40061	160	224T8-40421	160	224T8-42531	155
224T8-30141	153	224T8-40071	155	224T8-40431	155	224T8-42531	160
224T8-30142	153	224T8-40071	160	224T8-40431	160	224T8-42531	210
224T8-30151	153	224T8-40081	155	224T8-40441	155	224T8-42541	155
224T8-30152	153	224T8-40081	160	224T8-40441	160	224T8-42541	160
224T8-30161	153	224T8-40091	155	224T8-40451	155	224T8-42541	210
224T8-30162	153	224T8-40091	160	224T8-40451	160	224T8-42621	155
224T8-30201	153	224T8-40101	155	224T8-40461	155	224T8-42621	160
224T8-30202	153	224T8-40101	160	224T8-40461	160	224T8-42621	165
224T8-30211	153	224T8-40111	155	224T8-40471	155	224T8-42621	170
224T8-30212	153	224T8-40111	160	224T8-40471	160	224T8-42621	175
224T8-30221	153	224T8-40121	155	224T8-40481	155	224T8-42621	210
224T8-30222	153	224T8-40121	160	224T8-40481	160	224T8-42621	216
224T8-30231	153	224T8-40131	155	224T8-40491	155	224T8-42621	222
224T8-30232	153	224T8-40131	160	224T8-40491	160	224T8-42701	155
224T8-30241	153	224T8-40141	155	224T8-40501	155	224T8-42701	155
224T8-30242	153	224T8-40141	160	224T8-40501	160	224T8-42701	160
224T8-30251	153	224T8-40151	155	224T8-40511	155	224T8-42701	160
224T8-30252	153	224T8-40151	160	224T8-40511	160	224T8-42701	181
224T8-30261	153	224T8-40161	155	224T8-40521	155	224T8-42701	186
224T8-30262	153	224T8-40161	160	224T8-40521	160	224T8-42701	192
224T8-30271	153	224T8-40202	155	224T8-40531	155	224T8-42701	197
224T8-30272	153	224T8-40202	160	224T8-40531	160	224T8-42701	204
224T8-30281	153	224T8-40212	155	224T8-40541	155	224T8-42701	210
224T8-30282	153	224T8-40212	160	224T8-40541	160	224T8-42711	155
224T8-30291	153	224T8-40222	155	224T8-40551	155	224T8-42711	155
224T8-30292	153	224T8-40222	160	224T8-40551	160	224T8-42711	160
224T8-30301	153	224T8-40232	155	224T8-40561	155	224T8-42711	160

PARTS NUMBER INDEX

Part No.	Fig.No.	Part No.	Fig.No.	Part No.	Fig.No.	Part No.	Fig.No.
224T8-42711	165	224T8-46011	170	224T8-52501	184	224U8-30161	158
224T8-42711	165	224T8-46011	175	224T8-52501	189	224U8-30162	158
224T8-42711	170	224T8-46011	210	224T8-52501	195	224U8-30201	158
224T8-42711	170	224T8-46011	216	224T8-52501	200	224U8-30211	158
224T8-42711	175	224T8-46011	222	224T8-52501	207	224U8-30221	158
224T8-42711	175	224T8-49803	155	224T8-52501	213	224U8-30231	158
224T8-42711	181	224T8-49803	160	224T8-52501	219	224U8-30241	158
224T8-42711	186	224T8-49803	210	224T8-52551	136	224U8-30251	158
224T8-42711	192	224T8-50001	136	224T8-52551	136A	224U8-30261	158
224T8-42711	197	224T8-50011	136	224T8-52701	136A	224U8-30271	158
224T8-42711	204	224T8-50021	136	224T8-52711	136A	224U8-30281	158
224T8-42711	210	224T8-50031	136	224T8-53001	136A	224U8-30291	158
224T8-42711	216	224T8-50041	136	224T8-53011	136A	224U8-30301	158
224T8-42711	222	224T8-50051	136	224T8-53021	136A	224U8-30311	158
224T8-42711	222	224T8-50061	136	224T8-53031	136A	224U8-30321	158
224T8-42801	155	224T8-50071	136	224T8-59801	136	224U8-30331	158
224T8-42801	160	224T8-50081	136	224T8-59801	136A	224U8-30341	158
224T8-42801	210	224T8-50091	136	224T8-83301	222	224U8-30351	158
224T8-42861	156	224T8-50102	136	224T8-83311	222	224U8-30361	158
224T8-42861	161	224T8-50112	136	224T8-83321	222	224U8-32001	158
224T8-42861	166	224T8-50301	136	224T8-83331	222	224U8-32001	168
224T8-42861	171	224T8-50301	136A	224T8-83341	222	224U8-42001	160
224T8-42861	176	224T8-50501	136	224T8-83351	222	224U8-42001	170
224T8-42861	182	224T8-50501	136A	224T8-83361	222	224W2-12541	7
224T8-42861	193	224T8-51001	136A	224T9-12201	137	224W2-12541	7
224T8-42861	205	224T8-51011	136A	224T9-12201	138	224W2-12541	8
224T8-42861	211	224T8-52112	136	224T9-12211	137	224W2-22001	97
224T8-42861	217	224T8-52112	136A	224T9-12211	138	224W2-22071	9
224T8-42861	223	224T8-52121	136	224U8-30001	158	224W2-22071	9
224T8-43001	187	224T8-52121	136A	224U8-30002	158	224W2-32301	13
224T8-43001	198	224T8-52131	136	224U8-30011	158	224W2-32301	14
224T8-43011	187	224T8-52131	136A	224U8-30012	158	224W2-32301	14
224T8-43011	198	224T8-52141	136	224U8-30021	158	224W2-32301	15
224T8-44001	156	224T8-52141	136A	224U8-30022	158	224W2-32301	16
224T8-44001	161	224T8-52151	136	224U8-30031	158	224W2-32311	13
224T8-44001	166	224T8-52151	136A	224U8-30032	158	224W2-32311	14
224T8-44001	171	224T8-52161	136	224U8-30041	158	224W2-32311	14
224T8-44001	176	224T8-52161	136A	224U8-30042	158	224W2-32311	15
224T8-44001	211	224T8-52221	136	224U8-30051	158	224W2-32311	16
224T8-44021	156	224T8-52221	136A	224U8-30052	158	224W2-42371	18
224T8-44021	161	224T8-52231	136	224U8-30061	158	224W2-42371	19
224T8-44021	166	224T8-52231	136A	224U8-30062	158	224W2-42411	18
224T8-44021	171	224T8-52291	136	224U8-30071	158	224W2-42411	19
224T8-44021	176	224T8-52291	136A	224U8-30072	158	224W2-42421	18
224T8-46001	155	224T8-52301	136	224U8-30081	158	224W2-42421	19
224T8-46001	160	224T8-52301	136A	224U8-30082	158	224W2-42431	18
224T8-46001	165	224T8-52311	136	224U8-30091	158	224W2-42431	19
224T8-46001	170	224T8-52311	136A	224U8-30092	158	224W2-42431	20
224T8-46001	175	224T8-52321	136	224U8-30101	158	224W2-42701	17
224T8-46001	181	224T8-52321	136A	224U8-30102	158	224W2-42701	17
224T8-46001	186	224T8-52331	136	224U8-30111	158	224W2-43001	164
224T8-46001	192	224T8-52331	136A	224U8-30112	158	224W2-43001	169
224T8-46001	197	224T8-52421	136	224U8-30121	158	224W2-43001	190
224T8-46001	204	224T8-52421	136A	224U8-30122	158	224W2-43001	208
224T8-46001	210	224T8-52501	153	224U8-30131	158	224W2-43001	214
224T8-46001	216	224T8-52501	158	224U8-30132	158	224W2-43001	208A
224T8-46001	222	224T8-52501	163	224U8-30141	158	224W2-43011	164
224T8-46011	155	224T8-52501	168	224U8-30142	158	224W2-43011	169
224T8-46011	160	224T8-52501	173	224U8-30151	158	224W2-43011	190
224T8-46011	165	224T8-52501	178	224U8-30152	158	224W2-43011	208

PARTS NUMBER INDEX

Part No.	Fig.No.	Part No.	Fig.No.	Part No.	Fig.No.	Part No.	Fig.No.
224W2-43011	214	224W4-30311	70	224W5-32501	93	224W7-82031	133
224W2-43011	208A	224W4-30311	70	224W5-32511	93	224W7-82031	133
224W2-43031	164	224W4-30401	70	224W5-32521	93	224W7-82041	133
224W2-43031	169	224W4-30401	70	224W5-40101	89	224W7-82051	133
224W2-43031	190	224W4-30401	70	224W5-40121	89	224W7-82061	133
224W2-43031	208	224W4-30451	70	224W5-40152	89	224W7-82071	133
224W2-43031	214	224W4-30451	70	224W5-40201	89	224W7-82131	133
224W2-43031	208A	224W4-30451	70	224W5-40201	92	224W9-12021	213
224W2-43041	164	224W4-32102	70	224W5-42142	89	224W9-12071	137
224W2-43041	169	224W4-32102	70	224W5-42161	89	224W9-12071	138
224W2-43041	190	224W4-32102	70	224W5-42181	89	224W9-12091	137
224W2-43041	214	224W4-32301	70	224W5-42201	89	224W9-12201	137
224W2-43041	208A	224W4-32301	70	224W5-42201	90	224W9-12211	137
224W2-43081	154	224W4-32301	70	224W5-42401	92	224X0-40001	184
224W2-43081	159	224W4-32341	70	224W5-42401	93	224X0-40002	184
224W2-43081	164	224W4-32341	70	224W5-42411	92	224X0-40011	184
224W2-43081	169	224W4-32341	70	224W5-42431	92	224X0-40012	184
224W2-43081	179	224W4-32461	70	224W5-42431	93	224X0-40021	184
224W2-43081	190	224W4-32461	70	224W5-42441	92	224X0-40022	184
224W2-43081	208	224W4-32461	70	224W5-42451	92	224X0-40031	184
224W2-43081	208	224W4-32501	70	224W6-12601	70	224X0-40032	184
224W2-43081	208	224W4-32501	70	224W6-12601	70	224X0-40041	184
224W2-43081	208	224W4-32501	70	224W6-12601	70	224X0-40042	184
224W2-43081	214	224W4-39801	70	224W6-12601	71	224X0-40051	184
224W2-43081	208A	224W4-39801	70	224W6-12611	70	224X0-40052	184
224W2-43091	154	224W4-39801	70	224W6-12611	70	224X0-40061	184
224W2-43091	159	224W4-39801	70	224W6-12611	70	224X0-40062	184
224W2-43091	164	224W4-39811	70	224W6-12611	71	224X0-40071	184
224W2-43091	169	224W4-39811	70	224W6-42391	99	224X0-40072	184
224W2-43091	179	224W4-39811	70	224W7-22201	108	224X0-40201	184
224W2-43091	190	224W4-39811	70	224W7-22211	108	224X0-40211	184
224W2-43091	208	224W4-50112	83	224W7-22221	108	224X0-40221	184
224W2-43091	208	224W4-50112	83	224W7-22231	108	224X0-40231	184
224W2-43091	208	224W4-50112	83	224W7-42251	119	224X0-40241	184
224W2-43091	214	224W4-50121	83	224W7-60151	125	224X0-40251	184
224W2-43091	208A	224W4-50121	83	224W7-60221	108	224X0-40261	184
224W3-02001	58	224W4-50301	83	224W7-60311	129	224X0-40271	184
224W3-02011	58	224W4-50301	83	224W7-60331	128	224X0-50001	185
224W3-02011	59	224W4-50301	83	224W7-60351	129	224X0-50002	185
224W3-02051	61	224W4-52001	83	224W7-60451	125	224X0-50002	196
224W3-02051	61A	224W4-52001	83	224W7-60451	125	224X0-50003	196
224W3-70201	61	224W4-52061	69	224W7-60461	125	224X0-50011	185
224W3-70211	61	224W4-52061	69	224W7-60552	125	224X0-50012	185
224W3-92001	57	224W4-52061	69	224W7-62021	126	224X0-50012	196
224W3-92021	57	224W4-52071	69	224W7-62031	126	224X0-50013	196
224W3-92201	57	224W4-52071	69	224W7-62051	65	224X0-50021	185
224W3-92221	57	224W4-52071	69	224W7-62051	65	224X0-50022	185
224W4-22001	69	224W5-20101	87	224W7-62101	126	224X0-50022	196
224W4-22001	69	224W5-22051	87	224W7-62231	129	224X0-50023	196
224W4-22001	69	224W5-30101	89	224W7-62231	130	224X0-50031	185
224W4-30201	70	224W5-30202	89	224W7-62281	126	224X0-50032	185
224W4-30201	70	224W5-30202	93	224W7-62291	126	224X0-50032	196
224W4-30201	70	224W5-32401	93	224W7-62301	128	224X0-50033	196
224W4-30211	70	224W5-32421	93	224W7-62321	125	224X0-50041	185
224W4-30211	70	224W5-32441	93	224W7-62351	125	224X0-50042	185
224W4-30211	70	224W5-32451	93	224W7-62391	125	224X0-50042	196
224W4-30251	70	224W5-32461	93	224W7-62391	125	224X0-50043	196
224W4-30251	70	224W5-32471	93	224W7-80101	133	224X0-50051	185
224W4-30251	70	224W5-32481	93	224W7-82011	133	224X0-50052	185
224W4-30311	70	224W5-32491	93	224W7-82021	133	224X0-50052	196

PARTS NUMBER INDEX

Part No.	Fig.No.	Part No.	Fig.No.	Part No.	Fig.No.	Part No.	Fig.No.
224X0-50053	196	224X0-50262	185	224X0-50651	185	224X0-52101	196
224X0-50061	185	224X0-50262	196	224X0-50651	196	224X0-52131	185
224X0-50062	185	224X0-50271	185	224X0-50651	196	224X0-52131	196
224X0-50062	196	224X0-50272	185	224X0-50652	196	224X0-52191	185
224X0-50063	196	224X0-50272	196	224X0-50652	196	224X0-52191	196
224X0-50071	185	224X0-50401	185	224X0-50661	185	224X0-60001	183
224X0-50072	185	224X0-50402	185	224X0-50661	185	224X0-60002	183
224X0-50072	196	224X0-50402	196	224X0-50661	196	224X0-60002	194
224X0-50073	196	224X0-50411	185	224X0-50661	196	224X0-62501	187
224X0-50101	185	224X0-50412	185	224X0-50662	196	224X0-62501	198
224X0-50102	185	224X0-50412	196	224X0-50662	196	224X0-62511	187
224X0-50102	196	224X0-50421	185	224X0-50671	185	224X0-62511	187
224X0-50103	196	224X0-50422	185	224X0-50671	185	224X0-62511	198
224X0-50111	185	224X0-50422	196	224X0-50671	196	224X0-62511	198
224X0-50112	185	224X0-50431	185	224X0-50671	196	224X0-62531	187
224X0-50112	196	224X0-50432	185	224X0-50672	196	224X0-62531	198
224X0-50113	196	224X0-50432	196	224X0-50672	196	224X0-62541	187
224X0-50121	185	224X0-50441	185	224X0-51001	186	224X0-62541	198
224X0-50122	185	224X0-50442	185	224X0-51001	197	224X0-62551	187
224X0-50122	196	224X0-50442	196	224X0-51011	186	224X0-62551	198
224X0-50123	196	224X0-50451	185	224X0-51011	197	224X0-62561	187
224X0-50131	185	224X0-50452	185	224X0-51021	186	224X0-62561	198
224X0-50132	185	224X0-50452	196	224X0-51021	197	224X0-62571	187
224X0-50132	196	224X0-50461	185	224X0-51031	186	224X0-62571	198
224X0-50133	196	224X0-50462	185	224X0-51031	197	224X0-62731	187
224X0-50141	185	224X0-50462	196	224X0-51041	186	224X0-62731	198
224X0-50142	185	224X0-50471	185	224X0-51041	197	224X0-62741	187
224X0-50142	196	224X0-50472	185	224X0-51051	186	224X0-62741	198
224X0-50143	196	224X0-50472	196	224X0-51051	197	224X0-62751	187
224X0-50151	185	224X0-50601	185	224X0-51061	186	224X0-62751	198
224X0-50152	185	224X0-50601	185	224X0-51061	197	224X0-62761	187
224X0-50152	196	224X0-50601	196	224X0-51071	186	224X0-62761	198
224X0-50153	196	224X0-50601	196	224X0-51071	197	224X0-62771	187
224X0-50161	185	224X0-50602	196	224X0-51201	186	224X0-62771	187
224X0-50162	185	224X0-50602	196	224X0-51201	197	224X0-62771	187
224X0-50162	196	224X0-50611	185	224X0-51211	186	224X0-62771	187
224X0-50163	196	224X0-50611	185	224X0-51211	197	224X0-62771	198
224X0-50171	185	224X0-50611	196	224X0-51221	186	224X0-62771	198
224X0-50172	185	224X0-50611	196	224X0-51221	197	224X0-62771	198
224X0-50172	196	224X0-50612	196	224X0-51231	186	224X0-62771	198
224X0-50173	196	224X0-50612	196	224X0-51231	197	224X0-62781	187
224X0-50201	185	224X0-50621	185	224X0-51241	186	224X0-62782	187
224X0-50202	185	224X0-50621	185	224X0-51241	197	224X0-62782	198
224X0-50202	196	224X0-50621	196	224X0-51251	186	224X0-62851	187
224X0-50211	185	224X0-50621	196	224X0-51251	197	224X0-62851	198
224X0-50212	185	224X0-50622	196	224X0-51261	186	224X0-62871	187
224X0-50212	196	224X0-50622	196	224X0-51261	197	224X0-62872	187
224X0-50221	185	224X0-50631	185	224X0-51271	186	224X0-62872	198
224X0-50222	185	224X0-50631	185	224X0-51271	197	224X0-62881	187
224X0-50222	196	224X0-50631	196	224X0-52001	185	224X0-62882	187
224X0-50231	185	224X0-50631	196	224X0-52001	196	224X0-62882	198
224X0-50232	185	224X0-50632	196	224X0-52061	185	224X0-62891	187
224X0-50232	196	224X0-50632	196	224X0-52061	196	224X0-62891	198
224X0-50241	185	224X0-50641	185	224X0-52071	185	224X0-62921	187
224X0-50242	185	224X0-50641	185	224X0-52071	196	224X0-62921	198
224X0-50242	196	224X0-50641	196	224X0-52081	185	224X3-92061	90
224X0-50251	185	224X0-50641	196	224X0-52081	196	224X5-40131	90
224X0-50252	185	224X0-50642	196	224X0-52091	185	224X5-40171	90
224X0-50252	196	224X0-50642	196	224X0-52091	196	224X5-40181	90
224X0-50261	185	224X0-50651	185	224X0-52101	185	224X5-40201	90

Part No.	Fig.No.	Part No.	Fig.No.	Part No.	Fig.No.	Part No.	Fig.No.
224X5-40201	92	22548-34061	189	22678-32001	219	228A8-10614	162
224X5-42101	90	22548-34061	195	22678-42601	136A	228A8-10614	162
224X5-42131	90	22548-34061	200	22678-42611	7	228A8-10614	167
224X5-42181	90	22548-34061	207	22678-42611	7	228A8-10614	167
224X5-42201	90	22548-34061	213	22678-42621	136A	228A8-10614	188
224X5-42221	90	22548-34061	219	22678-42631	136A	228A8-10614	188
224X7-60361	130	22570-53201	181	22679-12102	147	228A8-10614	194
224X7-60551	125	22580-82461	165	22679-43231	153	228A8-10614	194
224X7-62001	130	22580-82461	170	22679-43231	158	228A8-10614	212
224X7-62051	134	22580-82461	175	22679-43231	163	228A8-10614	212
22430-92201	207	22580-82461	216	22679-43231	168	228A8-10623	162
22430-92201	213	22580-82461	222	22679-43231	173	228A8-10623	167
22430-92201	219	22580-82471	165	22679-43231	178	228A8-10623	188
22430-92202	207	22580-82471	170	22679-43231	184	228A8-10623	212
22430-92202	213	22580-82471	175	22679-43231	189	228A8-10624	162
22430-92202	219	22580-82471	216	22679-43231	195	228A8-10624	167
22430-92211	207	22580-82471	222	22679-43231	200	228A8-10624	188
22430-92211	213	22614-30280	70	22679-43231	207	228A8-10624	194
22430-92211	219	22614-30280	70	22679-43231	213	228A8-10624	212
22430-92212	207	22614-30280	70	22679-43231	219	228A8-10633	162
22430-92212	213	22614-30280	71	22679-47301	143	228A8-10633	167
22430-92212	219	22650-92122	199	22679-47301	143A	228A8-10633	188
22430-92641	223	22650-92221	217	22679-47861	208A	228A8-10633	212
22452-22001	11	22654-32121	70	228A3-02011	58	228A8-10634	162
225N2-42031	20	22654-32121	70	228A3-02011	59	228A8-10634	167
225N2-42031	20	22654-32121	70	228A3-02021	59	228A8-10634	188
225N9-12001	138	22654-32121	71	228A3-02031	59	228A8-10634	194
225N9-12031	138	22654-32201	70	228A3-72001	62	228A8-10634	212
225R9-12001	138	22654-32201	70	228A3-72011	62	228A8-10643	162
225R9-12031	138	22654-32201	70	228A4-32071	70	228A8-10643	167
225R9-12051	138	22654-32201	71	228A4-32071	70	228A8-10643	188
225R9-12071	138	22654-32281	70	228A4-32071	70	228A8-10643	212
225R9-12111	138	22654-32281	70	228A4-32071	71	228A8-10644	162
225R9-12121	138	22654-32281	70	228A4-32081	70	228A8-10644	167
22518-40151	180	22654-32281	71	228A4-32081	70	228A8-10644	188
22518-40151	191	22655-42261	43	228A4-32081	70	228A8-10644	194
22518-40151	203	22657-82221	131	228A4-32081	71	228A8-10644	212
22518-40151	209	22657-82221	132	228A4-32151	70	228A8-10653	162
22518-40151	215	22658-52301	181	228A4-32151	70	228A8-10653	167
22518-40151	221	22658-52301	186	228A4-32151	70	228A8-10653	188
22548-34051	153	22658-52301	192	228A4-32151	71	228A8-10653	212
22548-34051	158	22658-52301	197	228A4-40301	79	228A8-10654	162
22548-34051	163	22658-52301	204	228A4-40301	80	228A8-10654	167
22548-34051	168	22672-42501	31	228A8-10603	162	228A8-10654	188
22548-34051	173	22672-42501	32	228A8-10603	167	228A8-10654	194
22548-34051	178	22678-22501	51	228A8-10603	188	228A8-10654	212
22548-34051	184	22678-22501	52	228A8-10603	212	228A8-10663	162
22548-34051	189	22678-22501	53	228A8-10604	162	228A8-10663	167
22548-34051	195	22678-32001	153	228A8-10604	167	228A8-10663	188
22548-34051	200	22678-32001	158	228A8-10604	188	228A8-10663	212
22548-34051	207	22678-32001	163	228A8-10604	194	228A8-10664	162
22548-34051	213	22678-32001	168	228A8-10604	212	228A8-10664	167
22548-34051	219	22678-32001	173	228A8-10613	162	228A8-10664	188
22548-34061	153	22678-32001	178	228A8-10613	162	228A8-10664	194
22548-34061	158	22678-32001	184	228A8-10613	167	228A8-10664	212
22548-34061	163	22678-32001	189	228A8-10613	167	228A8-10673	162
22548-34061	168	22678-32001	195	228A8-10613	188	228A8-10673	167
22548-34061	173	22678-32001	200	228A8-10613	188	228A8-10673	188
22548-34061	178	22678-32001	207	228A8-10613	212	228A8-10673	212
22548-34061	184	22678-32001	213	228A8-10613	212	228A8-10674	162

PARTS NUMBER INDEX

Part No.	Fig.No.	Part No.	Fig.No.	Part No.	Fig.No.	Part No.	Fig.No.
228A8-10674	167	228A8-10743	188	228A8-10804	212	228C0-40232	189
228A8-10674	188	228A8-10743	212	228A8-10813	162	228C0-40241	189
228A8-10674	194	228A8-10744	162	228A8-10813	167	228C0-40241	200
228A8-10674	212	228A8-10744	167	228A8-10813	188	228C0-40242	189
228A8-10683	162	228A8-10744	188	228A8-10813	212	228C0-40242	200
228A8-10683	167	228A8-10744	194	228A8-10814	162	228C0-40251	189
228A8-10683	188	228A8-10744	212	228A8-10814	167	228C0-40252	189
228A8-10683	212	228A8-10753	162	228A8-10814	188	228C0-40261	189
228A8-10684	162	228A8-10753	167	228A8-10814	194	228C0-40261	200
228A8-10684	167	228A8-10753	188	228A8-10814	212	228C0-40262	189
228A8-10684	188	228A8-10753	212	228A8-10823	162	228C0-40262	200
228A8-10684	194	228A8-10754	162	228A8-10823	167	228C0-40271	189
228A8-10684	212	228A8-10754	167	228A8-10823	188	228C0-40272	189
228A8-10693	162	228A8-10754	188	228A8-10823	212	228C0-40281	189
228A8-10693	167	228A8-10754	194	228A8-10824	162	228C0-40282	189
228A8-10693	188	228A8-10754	212	228A8-10824	167	228C0-40291	189
228A8-10693	212	228A8-10763	162	228A8-10824	188	228C0-40291	200
228A8-10694	162	228A8-10763	167	228A8-10824	194	228C0-40292	189
228A8-10694	167	228A8-10763	188	228A8-10824	212	228C0-40292	200
228A8-10694	188	228A8-10763	212	228C0-40001	189	228C0-40301	189
228A8-10694	194	228A8-10764	162	228C0-40002	189	228C0-40302	189
228A8-10694	212	228A8-10764	167	228C0-40011	189	228C0-40311	189
228A8-10703	162	228A8-10764	188	228C0-40012	189	228C0-40311	200
228A8-10703	167	228A8-10764	194	228C0-40021	189	228C0-40312	189
228A8-10703	188	228A8-10764	212	228C0-40022	189	228C0-40312	200
228A8-10703	212	228A8-10773	162	228C0-40031	189	228C0-40321	189
228A8-10704	162	228A8-10773	167	228C0-40032	189	228C0-40321	200
228A8-10704	167	228A8-10773	188	228C0-40041	189	228C0-40322	189
228A8-10704	188	228A8-10773	212	228C0-40042	189	228C0-40322	200
228A8-10704	194	228A8-10774	162	228C0-40051	189	228C0-40331	189
228A8-10704	212	228A8-10774	167	228C0-40052	189	228C0-40331	200
228A8-10713	162	228A8-10774	188	228C0-40061	189	228C0-40332	189
228A8-10713	167	228A8-10774	194	228C0-40062	189	228C0-40332	200
228A8-10713	188	228A8-10774	212	228C0-40071	189	228C0-40341	189
228A8-10713	212	228A8-10783	162	228C0-40072	189	228C0-40341	200
228A8-10714	162	228A8-10783	167	228C0-40081	189	228C0-40342	189
228A8-10714	167	228A8-10783	188	228C0-40082	189	228C0-40342	200
228A8-10714	188	228A8-10783	212	228C0-40091	189	228C0-40351	189
228A8-10714	194	228A8-10784	162	228C0-40092	189	228C0-40352	189
228A8-10714	212	228A8-10784	167	228C0-40101	189	228C0-40361	189
228A8-10723	162	228A8-10784	188	228C0-40102	189	228C0-40362	189
228A8-10723	167	228A8-10784	194	228C0-40111	189	228C0-50001	180
228A8-10723	188	228A8-10784	212	228C0-40112	189	228C0-50001	191
228A8-10723	212	228A8-10793	162	228C0-40121	189	228C0-50001	203
228A8-10724	162	228A8-10793	167	228C0-40122	189	228C0-50002	180
228A8-10724	167	228A8-10793	188	228C0-40131	189	228C0-50002	191
228A8-10724	188	228A8-10793	212	228C0-40132	189	228C0-50002	203
228A8-10724	194	228A8-10794	162	228C0-40141	189	228C0-50011	180
228A8-10724	212	228A8-10794	167	228C0-40142	189	228C0-50011	191
228A8-10733	162	228A8-10794	188	228C0-40151	189	228C0-50011	203
228A8-10733	167	228A8-10794	194	228C0-40152	189	228C0-50012	180
228A8-10733	188	228A8-10794	212	228C0-40161	189	228C0-50012	191
228A8-10733	212	228A8-10803	162	228C0-40162	189	228C0-50012	203
228A8-10734	162	228A8-10803	167	228C0-40201	189	228C0-50021	180
228A8-10734	167	228A8-10803	188	228C0-40202	189	228C0-50021	191
228A8-10734	188	228A8-10803	212	228C0-40211	189	228C0-50021	203
228A8-10734	194	228A8-10804	162	228C0-40212	189	228C0-50022	180
228A8-10734	212	228A8-10804	167	228C0-40221	189	228C0-50022	191
228A8-10743	162	228A8-10804	188	228C0-40222	189	228C0-50022	203
228A8-10743	167	228A8-10804	194	228C0-40231	189	228C0-50031	180

Part No.	Fig.No.	Part No.	Fig.No.	Part No.	Fig.No.	Part No.	Fig.No.
228C0-50031	191	228C0-50201	191	228C0-50471	191	228C0-50901	192
228C0-50031	203	228C0-50201	203	228C0-50471	203	228C0-50911	192
228C0-50032	180	228C0-50211	180	228C0-50481	180	228C0-50921	192
228C0-50032	191	228C0-50211	191	228C0-50481	191	228C0-50931	192
228C0-50032	203	228C0-50211	203	228C0-50481	203	228C0-50941	192
228C0-50041	180	228C0-50221	180	228C0-50491	180	228C0-50951	192
228C0-50041	191	228C0-50221	191	228C0-50491	191	228C0-50961	192
228C0-50041	203	228C0-50221	203	228C0-50491	203	228C0-51001	181
228C0-50042	180	228C0-50231	180	228C0-50501	180	228C0-51001	186
228C0-50042	191	228C0-50231	191	228C0-50501	191	228C0-51001	192
228C0-50042	203	228C0-50231	203	228C0-50501	203	228C0-51001	197
228C0-50051	180	228C0-50241	180	228C0-50511	180	228C0-51001	204
228C0-50051	191	228C0-50241	191	228C0-50511	191	228C0-51011	181
228C0-50051	203	228C0-50241	203	228C0-50511	203	228C0-51011	192
228C0-50052	180	228C0-50251	180	228C0-50521	180	228C0-51011	204
228C0-50052	191	228C0-50251	191	228C0-50521	191	228C0-51021	181
228C0-50052	203	228C0-50251	203	228C0-50521	203	228C0-51021	192
228C0-50061	180	228C0-50261	180	228C0-50601	186	228C0-51021	204
228C0-50061	191	228C0-50261	191	228C0-50601	192	228C0-51031	181
228C0-50061	203	228C0-50261	203	228C0-50601	197	228C0-51031	192
228C0-50062	180	228C0-50271	180	228C0-50611	192	228C0-51031	204
228C0-50062	191	228C0-50271	191	228C0-50621	192	228C0-51041	181
228C0-50062	203	228C0-50271	203	228C0-50631	192	228C0-51041	186
228C0-50071	180	228C0-50281	180	228C0-50641	186	228C0-51041	192
228C0-50071	191	228C0-50281	191	228C0-50641	192	228C0-51041	197
228C0-50071	203	228C0-50281	203	228C0-50641	197	228C0-51041	204
228C0-50072	180	228C0-50291	180	228C0-50651	186	228C0-51051	181
228C0-50072	191	228C0-50291	191	228C0-50651	192	228C0-51051	186
228C0-50072	203	228C0-50291	203	228C0-50651	197	228C0-51051	192
228C0-50081	180	228C0-50301	180	228C0-50661	186	228C0-51051	197
228C0-50081	191	228C0-50301	191	228C0-50661	192	228C0-51051	204
228C0-50081	203	228C0-50301	203	228C0-50661	197	228C0-51061	181
228C0-50082	180	228C0-50311	180	228C0-50671	186	228C0-51061	186
228C0-50082	191	228C0-50311	191	228C0-50671	192	228C0-51061	192
228C0-50082	203	228C0-50311	203	228C0-50671	197	228C0-51061	197
228C0-50091	180	228C0-50321	180	228C0-50681	186	228C0-51061	204
228C0-50091	191	228C0-50321	191	228C0-50681	192	228C0-51071	181
228C0-50091	203	228C0-50321	203	228C0-50681	197	228C0-51071	186
228C0-50092	180	228C0-50401	180	228C0-50691	186	228C0-51071	192
228C0-50092	191	228C0-50401	191	228C0-50691	192	228C0-51071	197
228C0-50092	203	228C0-50401	203	228C0-50691	197	228C0-51071	204
228C0-50101	180	228C0-50411	180	228C0-50701	186	228C0-51081	181
228C0-50101	191	228C0-50411	191	228C0-50701	192	228C0-51081	186
228C0-50101	203	228C0-50411	203	228C0-50701	197	228C0-51081	192
228C0-50102	180	228C0-50421	180	228C0-50711	192	228C0-51081	197
228C0-50102	191	228C0-50421	191	228C0-50721	192	228C0-51081	204
228C0-50102	203	228C0-50421	203	228C0-50731	192	228C0-51091	181
228C0-50111	180	228C0-50431	180	228C0-50741	192	228C0-51091	186
228C0-50111	191	228C0-50431	191	228C0-50751	192	228C0-51091	192
228C0-50111	203	228C0-50431	203	228C0-50761	192	228C0-51091	197
228C0-50112	180	228C0-50441	180	228C0-50801	192	228C0-51091	204
228C0-50112	191	228C0-50441	191	228C0-50811	192	228C0-51101	181
228C0-50112	203	228C0-50441	203	228C0-50821	192	228C0-51101	186
228C0-50121	180	228C0-50451	180	228C0-50831	192	228C0-51101	192
228C0-50121	191	228C0-50451	191	228C0-50841	192	228C0-51101	197
228C0-50121	203	228C0-50451	203	228C0-50851	192	228C0-51101	204
228C0-50122	180	228C0-50461	180	228C0-50861	192	228C0-51111	181
228C0-50122	191	228C0-50461	191	228C0-50871	192	228C0-51111	192
228C0-50122	203	228C0-50461	203	228C0-50881	192	228C0-51111	204
228C0-50201	180	228C0-50471	180	228C0-50891	192	228C0-51121	181

PARTS NUMBER INDEX

Part No.	Fig.No.	Part No.	Fig.No.	Part No.	Fig.No.	Part No.	Fig.No.
228C0-51121	192	228C0-51351	192	228C0-51651	192	228C0-60001	188
228C0-51121	204	228C0-51351	204	228C0-51651	197	228C0-61001	188
228C0-51131	181	228C0-51361	181	228C0-51661	186	228C0-62501	193
228C0-51131	192	228C0-51361	192	228C0-51661	192	228C0-62501	205
228C0-51131	204	228C0-51361	204	228C0-51661	197	228C0-70001	213
228C0-51141	181	228C0-51401	186	228C0-51661	204	228C0-70011	213
228C0-51141	192	228C0-51401	192	228C0-51671	186	228C0-70021	213
228C0-51141	204	228C0-51401	197	228C0-51671	192	228C0-70031	213
228C0-51151	181	228C0-51401	204	228C0-51671	197	228C0-70041	213
228C0-51151	192	228C0-51411	192	228C0-51681	186	228C0-70051	213
228C0-51151	204	228C0-51421	192	228C0-51681	192	228C0-70061	213
228C0-51161	181	228C0-51431	192	228C0-51681	197	228C0-70071	213
228C0-51161	192	228C0-51431	204	228C0-51691	186	228C0-70081	213
228C0-51161	204	228C0-51441	186	228C0-51691	192	228C0-70091	213
228C0-51201	181	228C0-51441	192	228C0-51691	197	228C0-70101	213
228C0-51201	192	228C0-51441	197	228C0-51691	204	228C0-70111	213
228C0-51201	204	228C0-51441	204	228C0-51701	186	228C0-70201	213
228C0-51211	181	228C0-51451	186	228C0-51701	192	228C0-70211	213
228C0-51211	192	228C0-51451	192	228C0-51701	197	228C0-70221	213
228C0-51211	204	228C0-51451	197	228C0-51711	192	228C0-70231	213
228C0-51221	181	228C0-51461	186	228C0-51711	204	228C0-70241	213
228C0-51221	192	228C0-51461	192	228C0-51721	192	228C0-70251	213
228C0-51221	204	228C0-51461	197	228C0-51721	204	228C0-70261	213
228C0-51231	181	228C0-51461	204	228C0-51731	192	228C0-70271	213
228C0-51231	192	228C0-51471	186	228C0-51731	204	228C0-70281	213
228C0-51231	204	228C0-51471	192	228C0-51741	192	228C0-70291	213
228C0-51241	181	228C0-51471	197	228C0-51741	204	228C0-70301	213
228C0-51241	192	228C0-51481	186	228C0-51751	192	228C0-70311	213
228C0-51241	204	228C0-51481	192	228C0-51761	192	228C0-70401	213
228C0-51251	181	228C0-51481	197	228C0-53011	181	228C0-70411	213
228C0-51251	192	228C0-51491	186	228C0-53011	186	228C0-70421	213
228C0-51251	204	228C0-51491	192	228C0-53011	192	228C0-70431	213
228C0-51261	181	228C0-51491	197	228C0-53011	197	228C0-70441	213
228C0-51261	192	228C0-51491	204	228C0-53011	204	228C0-70451	213
228C0-51261	204	228C0-51501	186	228C0-53021	181	228C0-70461	213
228C0-51271	181	228C0-51501	192	228C0-53021	186	228C0-70471	213
228C0-51271	192	228C0-51501	197	228C0-53021	192	228C0-70481	213
228C0-51271	204	228C0-51511	192	228C0-53021	197	228C0-70491	213
228C0-51281	181	228C0-51511	204	228C0-53021	204	228C0-70501	213
228C0-51281	192	228C0-51521	192	228C0-53301	181	228C0-70511	213
228C0-51281	204	228C0-51521	204	228C0-53301	181	228C0-80001	215
228C0-51291	181	228C0-51531	192	228C0-53301	186	228C0-80001	221
228C0-51291	192	228C0-51531	204	228C0-53301	192	228C0-80002	215
228C0-51291	204	228C0-51541	192	228C0-53301	197	228C0-80002	221
228C0-51301	181	228C0-51541	204	228C0-53301	204	228C0-80011	215
228C0-51301	192	228C0-51551	192	228C0-53311	181	228C0-80011	221
228C0-51301	204	228C0-51561	192	228C0-53311	186	228C0-80012	215
228C0-51311	181	228C0-51601	186	228C0-53311	192	228C0-80012	221
228C0-51311	192	228C0-51601	192	228C0-53311	197	228C0-80021	180
228C0-51311	204	228C0-51601	197	228C0-53311	204	228C0-80021	191
228C0-51321	181	228C0-51601	204	228C0-53401	181	228C0-80021	203
228C0-51321	192	228C0-51611	192	228C0-53401	186	228C0-80021	215
228C0-51321	204	228C0-51621	192	228C0-53401	192	228C0-80021	221
228C0-51331	181	228C0-51631	192	228C0-53401	197	228C0-80022	180
228C0-51331	192	228C0-51631	204	228C0-53401	204	228C0-80022	191
228C0-51331	204	228C0-51641	186	228C0-59801	180	228C0-80022	203
228C0-51341	181	228C0-51641	192	228C0-59801	191	228C0-80022	215
228C0-51341	192	228C0-51641	197	228C0-59801	203	228C0-80022	221
228C0-51341	204	228C0-51641	204	228C0-59801	215	228C0-80031	180
228C0-51351	181	228C0-51651	186	228C0-59801	221	228C0-80031	191

PARTS NUMBER INDEX

Part No.	Fig.No.	Part No.	Fig.No.	Part No.	Fig.No.	Part No.	Fig.No.
228C0-80031	203	228C0-80221	221	228C0-80501	215	228C0-81441	216
228C0-80031	215	228C0-80231	180	228C0-80501	221	228C0-81441	222
228C0-80031	221	228C0-80231	191	228C0-80511	215	228C0-81451	216
228C0-80032	180	228C0-80231	203	228C0-80511	221	228C0-81451	222
228C0-80032	191	228C0-80231	215	228C0-81001	216	228C0-81461	216
228C0-80032	203	228C0-80231	221	228C0-81001	222	228C0-81461	222
228C0-80032	215	228C0-80241	215	228C0-81011	216	228C0-81471	216
228C0-80032	221	228C0-80241	221	228C0-81011	222	228C0-81471	222
228C0-80041	215	228C0-80251	180	228C0-81021	216	228C0-81481	216
228C0-80041	221	228C0-80251	191	228C0-81021	222	228C0-81481	222
228C0-80042	215	228C0-80251	203	228C0-81031	216	228C0-81491	216
228C0-80042	221	228C0-80251	215	228C0-81031	222	228C0-81491	222
228C0-80051	180	228C0-80251	221	228C0-81041	216	228C0-81501	216
228C0-80051	191	228C0-80261	215	228C0-81041	222	228C0-81501	222
228C0-80051	203	228C0-80261	221	228C0-81051	216	228C0-81511	216
228C0-80051	215	228C0-80271	180	228C0-81051	222	228C0-81511	222
228C0-80051	221	228C0-80271	191	228C0-81061	216	228C0-81601	216
228C0-80052	180	228C0-80271	203	228C0-81061	222	228C0-81601	222
228C0-80052	191	228C0-80271	215	228C0-81071	216	228C0-81611	216
228C0-80052	203	228C0-80271	221	228C0-81071	222	228C0-81611	222
228C0-80052	215	228C0-80281	215	228C0-81081	216	228C0-81621	216
228C0-80052	221	228C0-80281	221	228C0-81081	222	228C0-81621	222
228C0-80061	215	228C0-80291	215	228C0-81091	216	228C0-81631	216
228C0-80061	221	228C0-80291	221	228C0-81091	222	228C0-81631	222
228C0-80062	215	228C0-80301	215	228C0-81101	216	228C0-81641	216
228C0-80062	221	228C0-80301	221	228C0-81101	222	228C0-81641	222
228C0-80071	180	228C0-80311	215	228C0-81111	216	228C0-81651	216
228C0-80071	191	228C0-80311	221	228C0-81111	222	228C0-81651	222
228C0-80071	203	228C0-80401	215	228C0-81201	216	228C0-81661	216
228C0-80071	215	228C0-80401	221	228C0-81201	222	228C0-81661	222
228C0-80071	221	228C0-80411	215	228C0-81211	216	228C0-81671	216
228C0-80072	180	228C0-80411	221	228C0-81211	222	228C0-81671	222
228C0-80072	191	228C0-80421	180	228C0-81221	216	228C0-81681	216
228C0-80072	203	228C0-80421	191	228C0-81221	222	228C0-81681	222
228C0-80072	215	228C0-80421	203	228C0-81231	216	228C0-81691	216
228C0-80072	221	228C0-80421	215	228C0-81231	222	228C0-81691	222
228C0-80081	215	228C0-80421	221	228C0-81241	216	228C0-81701	216
228C0-80081	221	228C0-80431	180	228C0-81241	222	228C0-81701	222
228C0-80082	215	228C0-80431	191	228C0-81251	216	228C0-81711	216
228C0-80082	221	228C0-80431	203	228C0-81251	222	228C0-81711	222
228C0-80091	215	228C0-80431	215	228C0-81261	216	228C0-81911	222
228C0-80091	221	228C0-80431	221	228C0-81261	222	228C0-82421	180
228C0-80092	215	228C0-80441	215	228C0-81271	216	228C0-82421	191
228C0-80092	221	228C0-80441	221	228C0-81271	222	228C0-82421	203
228C0-80101	215	228C0-80451	180	228C0-81281	216	228C0-82421	215
228C0-80101	221	228C0-80451	191	228C0-81281	222	228C0-82421	221
228C0-80102	215	228C0-80451	203	228C0-81291	216	228C0-82431	180
228C0-80102	221	228C0-80451	215	228C0-81291	222	228C0-82431	191
228C0-80111	215	228C0-80451	221	228C0-81301	216	228C0-82431	203
228C0-80111	221	228C0-80461	215	228C0-81301	222	228C0-82431	215
228C0-80112	215	228C0-80461	221	228C0-81311	216	228C0-82431	221
228C0-80112	221	228C0-80471	180	228C0-81311	222	228C0-82441	180
228C0-80201	215	228C0-80471	191	228C0-81401	216	228C0-82441	191
228C0-80201	221	228C0-80471	203	228C0-81401	222	228C0-82441	203
228C0-80211	215	228C0-80471	215	228C0-81411	216	228C0-82441	215
228C0-80211	221	228C0-80471	221	228C0-81411	222	228C0-82441	221
228C0-80221	180	228C0-80481	215	228C0-81421	216	228C0-82501	180
228C0-80221	191	228C0-80481	221	228C0-81421	222	228C0-82501	191
228C0-80221	203	228C0-80491	215	228C0-81431	216	228C0-82501	203
228C0-80221	215	228C0-80491	221	228C0-81431	222	228C0-82501	215

PARTS NUMBER INDEX

Part No.	Fig.No.	Part No.	Fig.No.	Part No.	Fig.No.	Part No.	Fig.No.
228C0-82501	221	228C0-93091	217	228C8-30242	163	228C8-40111	165
228C0-82511	180	228C0-93101	217	228C8-30242	173	228C8-40111	170
228C0-82511	191	228C0-93301	213	228C8-30251	163	228C8-40121	165
228C0-82511	203	228C0-93311	213	228C8-30252	163	228C8-40121	170
228C0-82511	215	228C0-93321	213	228C8-30261	163	228C8-40131	165
228C0-82511	221	228C0-93331	213	228C8-30261	173	228C8-40131	170
228C0-82521	180	228C5-42001	89	228C8-30262	163	228C8-40141	165
228C0-82521	191	228C5-42021	89	228C8-30262	173	228C8-40141	170
228C0-82521	203	228C8-20001	162	228C8-30271	163	228C8-40151	165
228C0-82521	215	228C8-20001	167	228C8-30272	163	228C8-40151	170
228C0-82521	221	228C8-21001	162	228C8-30281	163	228C8-40161	165
228C0-82531	180	228C8-21001	167	228C8-30282	163	228C8-40161	170
228C0-82531	191	228C8-30001	163	228C8-30291	163	228C8-40201	165
228C0-82531	203	228C8-30002	163	228C8-30291	173	228C8-40201	170
228C0-82531	215	228C8-30011	163	228C8-30292	163	228C8-40201	175
228C0-82531	221	228C8-30012	163	228C8-30292	173	228C8-40211	165
228C0-82541	180	228C8-30021	163	228C8-30301	163	228C8-40211	170
228C0-82541	191	228C8-30022	163	228C8-30302	163	228C8-40211	175
228C0-82541	203	228C8-30031	163	228C8-30311	163	228C8-40221	165
228C0-82541	215	228C8-30032	163	228C8-30311	173	228C8-40221	170
228C0-82541	221	228C8-30041	163	228C8-30312	163	228C8-40221	175
228C0-82801	216	228C8-30042	163	228C8-30312	173	228C8-40231	165
228C0-82801	222	228C8-30051	163	228C8-30321	163	228C8-40231	170
228C0-82811	216	228C8-30052	163	228C8-30321	173	228C8-40231	175
228C0-82811	222	228C8-30061	163	228C8-30322	163	228C8-40241	165
228C0-82821	216	228C8-30062	163	228C8-30322	173	228C8-40241	170
228C0-82821	222	228C8-30071	163	228C8-30331	163	228C8-40241	175
228C0-82831	216	228C8-30072	163	228C8-30331	173	228C8-40251	165
228C0-82831	222	228C8-30081	163	228C8-30332	163	228C8-40251	170
228C0-82841	216	228C8-30082	163	228C8-30332	173	228C8-40251	175
228C0-82841	222	228C8-30091	163	228C8-30341	163	228C8-40261	165
228C0-82851	216	228C8-30092	163	228C8-30341	173	228C8-40261	170
228C0-82851	222	228C8-30101	163	228C8-30342	163	228C8-40261	175
228C0-82861	216	228C8-30102	163	228C8-30342	173	228C8-40271	165
228C0-82861	222	228C8-30111	163	228C8-30351	163	228C8-40271	170
228C0-82871	216	228C8-30112	163	228C8-30352	163	228C8-40271	175
228C0-82871	222	228C8-30121	163	228C8-30361	163	228C8-40281	165
228C0-82881	216	228C8-30122	163	228C8-30362	163	228C8-40281	170
228C0-82881	222	228C8-30131	163	228C8-40001	165	228C8-40281	175
228C0-82891	216	228C8-30132	163	228C8-40001	170	228C8-40291	165
228C0-82891	222	228C8-30141	163	228C8-40011	165	228C8-40291	170
228C0-82901	216	228C8-30142	163	228C8-40011	170	228C8-40291	175
228C0-82901	222	228C8-30151	163	228C8-40021	165	228C8-40301	165
228C0-82911	216	228C8-30152	163	228C8-40021	170	228C8-40301	170
228C0-83201	216	228C8-30161	163	228C8-40031	165	228C8-40301	175
228C0-83201	222	228C8-30162	163	228C8-40031	170	228C8-40311	165
228C0-90001	212	228C8-30201	163	228C8-40041	165	228C8-40311	170
228C0-91011	217	228C8-30201	173	228C8-40041	170	228C8-40311	175
228C0-91011	223	228C8-30202	163	228C8-40051	165	228C8-40321	165
228C0-91101	212	228C8-30202	173	228C8-40051	170	228C8-40321	170
228C0-92301	217	228C8-30211	163	228C8-40061	165	228C8-40321	175
228C0-92301	223	228C8-30212	163	228C8-40061	170	228C8-40331	165
228C0-93011	217	228C8-30221	163	228C8-40071	165	228C8-40331	170
228C0-93021	217	228C8-30222	163	228C8-40071	170	228C8-40331	175
228C0-93031	217	228C8-30231	163	228C8-40081	165	228C8-40341	165
228C0-93041	217	228C8-30231	173	228C8-40081	170	228C8-40341	170
228C0-93051	217	228C8-30232	163	228C8-40091	165	228C8-40341	175
228C0-93061	217	228C8-30232	173	228C8-40091	170	228C8-40351	165
228C0-93071	217	228C8-30241	163	228C8-40101	165	228C8-40351	170
228C0-93081	217	228C8-30241	173	228C8-40101	170	228C8-40351	175

Part No.	Fig.No.	Part No.	Fig.No.	Part No.	Fig.No.	Part No.	Fig.No.
228C8-40361	165	228C8-42501	216	228E8-30091	168	229F2-42421	17
228C8-40361	170	228C8-42501	222	228E8-30092	168	229F2-42421	17
228C8-40361	175	228C8-42541	165	228E8-30101	168	229F2-42421	17
228C8-40401	165	228C8-42541	170	228E8-30102	168	229F2-42421	17
228C8-40401	170	228C8-42541	175	228E8-30111	168	229F2-42431	17
228C8-40401	175	228C8-42541	216	228E8-30112	168	229F6-42201	38
228C8-40411	165	228C8-42541	222	228E8-30121	168	229F6-42201	39
228C8-40411	170	228C8-42701	165	228E8-30122	168	229F6-42201	99
228C8-40421	165	228C8-42701	165	228E8-30131	168	229F6-42211	38
228C8-40421	170	228C8-42701	170	228E8-30132	168	229F6-42211	39
228C8-40431	165	228C8-42701	170	228E8-30141	168	22959-12052	138
228C8-40431	170	228C8-42701	175	228E8-30142	168	230C1-02041	85
228C8-40431	175	228C8-42701	175	228E8-30151	168	230C1-02041	86
228C8-40441	165	228C8-42701	216	228E8-30152	168	230C1-02061	3
228C8-40441	170	228C8-42701	222	228E8-30161	168	230C1-02071	3
228C8-40441	175	228C8-42701	222	228E8-30162	168	230C1-02081	3
228C8-40451	165	228C8-42801	165	228E8-30201	168	230C1-02091	3
228C8-40451	170	228C8-42801	170	228E8-30211	168	230C2-40101	17
228C8-40461	165	228C8-42801	175	228E8-30221	168	230C2-40101	18
228C8-40461	170	228C8-42801	216	228E8-30231	168	230C2-40101	19
228C8-40461	175	228C8-42801	222	228E8-30241	168	230C2-40151	17
228C8-40471	165	228C8-49803	165	228E8-30251	168	230C2-40161	17
228C8-40471	170	228C8-49803	175	228E8-30261	168	230C2-40351	18
228C8-40481	165	228C8-49803	216	228E8-30271	168	230C2-40351	19
228C8-40481	170	228C8-49803	222	228E8-30281	168	230C2-40351	22
228C8-40491	165	228C9-12201	137	228E8-30291	168	230C2-40401	63
228C8-40491	170	228C9-12201	138	228E8-30301	168	230C2-40411	63
228C8-40491	175	228C9-12211	137	228E8-30311	168	230C2-42031	63
228C8-40501	165	228C9-12211	138	228E8-30321	168	230C2-42161	23
228C8-40501	170	228E0-40003	195	228E8-30331	168	230C2-42201	19
228C8-40511	165	228E0-40013	195	228E8-30341	168	230C2-42211	17
228C8-40511	170	228E0-40023	195	228E8-30351	168	230C2-42211	17
228C8-40511	175	228E0-40033	195	228E8-30361	168	230C2-42221	17
228C8-40521	165	228E0-40043	195	228E9-12111	137	230C4-12501	21
228C8-40521	170	228E0-40053	195	228E9-12111	138	230C4-22201	65
228C8-40521	175	228E0-40063	195	228X0-40201	195	230C4-22201	65
228C8-40531	165	228E0-40073	195	228X0-40211	195	230C5-12101	85
228C8-40531	170	228E2-42111	25	228X0-40221	195	230C5-22011	87
228C8-40531	175	228E2-42111	25	228X0-40231	195	230C5-22011	88
228C8-40541	165	228E3-02001	59	228X0-40241	195	230C5-55011	94
228C8-40541	170	228E5-42001	90	228X0-40251	195	230C5-55021	94
228C8-40541	175	228E5-42021	90	228X0-40261	195	230C5-55031	94
228C8-40551	165	228E8-30001	168	228X0-40271	195	230C5-55041	94
228C8-40551	170	228E8-30002	168	22859-12033	138	230C5-55051	94
228C8-40561	165	228E8-30011	168	22859-12033	138	230C5-55061	94
228C8-40561	170	228E8-30012	168	229F2-22071	97	230C5-55071	94
228C8-41002	166	228E8-30021	168	229F2-22151	96	230C5-55081	94
228C8-41002	171	228E8-30022	168	229F2-22151	96	230C5-55101	94
228C8-41002	176	228E8-30031	168	229F2-22151	97	230C5-55111	94
228C8-41002	187	228E8-30032	168	229F2-22151	97	230C5-55121	94
228C8-41002	193	228E8-30041	168	229F2-22161	96	230C6-40501	100
228C8-41002	198	228E8-30042	168	229F2-22161	97	230C6-42401	100
228C8-41002	205	228E8-30051	168	229F2-22161	97	230C6-42411	100
228C8-41002	217	228E8-30052	168	229F2-22161	97	230C6-42421	100
228C8-41002	223	228E8-30061	168	229F2-22171	97	230C6-43001	100
228C8-42401	165	228E8-30062	168	229F2-22191	142	230C6-43001	100
228C8-42401	170	228E8-30071	168	229F2-22191	142	230C7-40091	116
228C8-42401	175	228E8-30072	168	229F2-42141	141	230C7-40091	117
228C8-42401	216	228E8-30081	168	229F2-42141	148	230C7-40091	118
228C8-42401	222	228E8-30082	168	229F2-42161	26	230C7-40091	119

PARTS NUMBER INDEX

Part No.	Fig.No.	Part No.	Fig.No.	Part No.	Fig.No.	Part No.	Fig.No.
230C7-40191	116	234A6-82051	104A	234A6-82251	104A	235C1-00301	3
230C7-40191	117	234A6-82051	105A	234A6-82251	105A	235C1-00311	3
230C7-40191	118	234A6-82061	106	234A6-82261	106	235C1-00311	4
230C7-40191	119	234A6-82061	104A	234A6-82261	104A	235C1-00351	3
230C7-40291	117	234A6-82061	105A	234A6-82261	105A	235C1-00351	4
230C7-40291	118	234A6-82071	106	234A6-82271	106	235C1-00371	3
230C7-40291	119	234A6-82071	104A	234A6-82271	104A	235C1-02031	3
230C7-40391	118	234A6-82071	105A	234A6-82271	105A	235C1-02031	4
230C7-40391	119	234A6-82081	106	234A6-82281	106	235C1-02051	1
230C7-40491	119	234A6-82081	104A	234A6-82281	104A	235C1-02051	1
230C7-60201	114	234A6-82081	105A	234A6-82281	105A	235C1-02051	2
230C7-60201	115	234A6-82091	106	234A6-82291	106	235C1-02051	2
230C9-12071	137	234A6-82091	104A	234A6-82291	104A	235C1-02061	1
230C9-32001	99	234A6-82091	105A	234A6-82291	105A	235C1-02061	2
23019-20011	139	234A6-82101	106	234A6-82301	106	235C1-02071	1
23019-20011	140	234A6-82101	104A	234A6-82301	104A	235C1-02071	2
23031-12002	21	234A6-82101	105A	234A6-82301	105A	235C1-02151	1
232A8-42201	185	234A6-82111	106	234A7-52101	96	235C1-02151	2
232A8-42201	196	234A6-82111	104A	23442-20041	10	235C1-02211	3
232W2-42181	17	234A6-82111	105A	23442-20041	11	235C1-02251	43
232W2-42181	17	234A6-82121	106	23442-20041	12	235C2-12011	7
232W2-42201	17	234A6-82121	104A	23442-20131	11	235C2-12021	7
232W2-42211	17	234A6-82121	105A	23442-20131	12	235C2-12031	7
232W9-10101	138	234A6-82131	106	23442-20161	12	235C2-20051	97
232W9-12011	138	234A6-82131	104A	23456-42181	100	235C2-22011	9
232W9-12021	138	234A6-82131	105A	23457-60331	66	235C2-22011	10
232W9-12051	138	234A6-82141	106	23457-62141	66	235C2-22011	11
23200-72221	1	234A6-82141	104A	23458-22101	207	235C2-22011	12
23200-72221	2	234A6-82141	105A	23458-32051	207	235C2-22101	9
23232-42072	18	234A6-82151	106	23458-32051	213	235C2-22101	10
23232-42072	19	234A6-82151	104A	23458-32051	219	235C2-32001	13
23232-42072	20	234A6-82151	105A	23458-32052	207	235C2-32051	13
23235-40091	89	234A6-82161	106	23458-32052	213	235C2-32051	14
23235-40091	90	234A6-82161	104A	23458-32052	219	235C2-32051	14
23252-22001	10	234A6-82161	105A	23460-53171	155	235C2-40101	18
23252-22001	12	234A6-82171	106	23460-53171	160	235C2-40101	19
23302-42311	31	234A6-82171	104A	23460-53171	165	235C2-40111	18
23302-42311	32	234A6-82171	105A	23460-53171	170	235C2-40111	19
23307-60301	66	234A6-82181	106	23460-53171	175	235C2-40111	20
23329-12051	138	234A6-82181	104A	23460-53171	181	235C2-40301	18
234A6-43121	101	234A6-82181	105A	23460-53171	186	235C2-40301	19
234A6-81001	106	234A6-82191	106	23460-53171	192	235C2-40301	20
234A6-81001	104A	234A6-82191	104A	23460-53171	197	235C2-42021	18
234A6-81001	105A	234A6-82191	105A	23460-53171	204	235C2-42021	19
234A6-82001	106	234A6-82201	106	23460-53171	210	235C2-42051	18
234A6-82001	104A	234A6-82201	104A	23460-53171	216	235C2-42061	18
234A6-82001	105A	234A6-82201	105A	23460-53171	222	235C2-42071	18
234A6-82011	106	234A6-82211	106	23460-53181	181	235C2-42071	19
234A6-82011	104A	234A6-82211	104A	23460-53181	186	235C2-42071	20
234A6-82011	105A	234A6-82211	105A	23460-53181	192	235C2-42101	18
234A6-82021	106	234A6-82221	106	23460-53181	197	235C2-42101	19
234A6-82021	104A	234A6-82221	104A	23460-53181	204	235C2-42101	22
234A6-82021	105A	234A6-82221	105A	23460-72501	207	235C2-42111	22
234A6-82031	106	234A6-82231	106	23460-72501	213	235C2-42121	18
234A6-82031	104A	234A6-82231	104A	23460-72501	219	235C2-42121	19
234A6-82031	105A	234A6-82231	105A	23469-12122	137	235C2-42121	20
234A6-82041	106	234A6-82241	106	235A9-12011	137	235C2-42131	22
234A6-82041	104A	234A6-82241	104A	235A9-12011	138	235C2-42141	22
234A6-82041	105A	234A6-82241	105A	235C1-00101	1	235C2-42171	18
234A6-82051	106	234A6-82251	106	235C1-00102	1	235C2-42171	19

Part No.	Fig.No.	Part No.	Fig.No.	Part No.	Fig.No.	Part No.	Fig.No.
235C2-42191	18	235C7-30201	110	235C8-50031	136A	235H0-40071	200
235C2-42191	19	235C7-30201	116	235C8-50041	136A	235H0-40072	200
235C2-42191	20	235C7-30202	116	235C8-50051	136A	235H0-40081	200
235C2-42231	18	235C7-30202	110A	235C8-50061	136A	235H0-40082	200
235C2-42231	19	235C7-30301	111	235C8-50071	136A	235H0-40091	200
235C5-10101	85	235C7-30301	117	235C8-50081	136A	235H0-40092	200
235C5-10131	85	235C7-30302	117	235C8-50091	136A	235H0-40101	200
235C5-10141	85	235C7-30302	111A	235C8-50101	136A	235H0-40102	200
235C5-10161	85	235C7-30401	112	235C8-50111	136A	235H0-40111	200
235C5-10161	85	235C7-30401	118	235C8-52001	136	235H0-40112	200
235C5-10171	85	235C7-30402	118	235C8-52001	136A	235H0-40121	200
235C5-10171	85	235C7-30402	112A	235C9-12011	137	235H0-40122	200
235C5-10171	85	235C7-30501	113	235C9-12011	138	235H0-40131	200
235C5-12151	101	235C7-30501	119	235C9-12021	137	235H0-40132	200
235C5-12151	102	235C7-30502	119	235C9-12021	138	235H0-40141	200
235C5-12151	102	235C7-30502	113A	235C9-12031	137	235H0-40142	200
235C5-12151	85	235C7-40091	116	235C9-12031	138	235H0-40151	200
235C5-12151	86	235C7-40091	117	235C9-12041	137	235H0-40152	200
235C5-12161	101	235C7-40091	118	235C9-12041	138	235H0-40161	200
235C5-12161	102	235C7-40091	119	235E1-00101	1	235H0-40162	200
235C5-12161	102	235C7-40191	116	235E2-10201	7	235H0-40201	200
235C5-12161	85	235C7-40191	117	235E2-10201	8	235H0-40202	200
235C5-12161	86	235C7-40191	118	235E2-10202	7	235H0-40211	200
235C5-12171	85	235C7-40191	119	235E2-10202	8	235H0-40212	200
235C5-12181	85	235C7-40291	117	235E2-10401	7	235H0-40221	200
235C5-12301	85	235C7-40291	118	235E2-10401	8	235H0-40222	200
235C5-22021	87	235C7-40291	119	235E2-10402	7	235H0-40231	200
235C5-22021	88	235C7-40391	118	235E2-10402	8	235H0-40232	200
235C5-40211	89	235C7-40391	119	235E2-10501	7	235H0-40241	200
235C5-40251	89	235C7-40491	119	235E2-10501	8	235H0-40242	200
235C5-40251	92	235C7-42001	116	235E2-10502	7	235H0-40251	200
235C5-50101	94	235C7-42001	117	235E2-10502	8	235H0-40252	200
235C5-55001	94	235C7-42001	118	235E2-42011	19	235H0-40261	200
235C6-40011	99	235C7-42001	119	235E2-42021	19	235H0-40262	200
235C6-40101	99	235C7-42021	116	235E2-42023	19	235H0-40271	200
235C6-40401	101	235C7-42021	117	235E2-42201	19	235H0-40272	200
235C6-40401	102	235C7-42021	118	235E2-72301	19	235H0-40281	200
235C6-40402	101	235C7-42021	119	235E6-52301	103	235H0-40282	200
235C6-40402	102	235C7-50201	96	235F3-72011	62	235H0-40291	200
235C6-42101	99	235C7-52001	96	235F3-72111	62	235H0-40292	200
235C6-42111	99	235C7-60001	125	235F9-12011	137	235H0-50001	204
235C6-42151	101	235C7-60101	125	235F9-12011	138	235H0-50011	204
235C6-42151	101	235C7-62021	125	235G2-42011	19	235H0-50021	204
235C6-42161	101	235C7-62031	125	235G2-42021	19	235H0-50031	204
235C6-42171	101	235C7-62041	125	235G2-42023	19	235H0-50041	204
235C6-42171	102	235C7-62051	125	235G2-72301	19	235H0-50051	204
235C6-42201	101	235C7-62131	126	235H0-40001	200	235H0-50061	204
235C6-42201	102	235C7-62141	126	235H0-40002	200	235H0-50071	204
235C6-42202	101	235C7-62151	126	235H0-40011	200	235H0-50081	204
235C6-42202	102	235C7-62211	128	235H0-40012	200	235H0-50091	204
235C6-42301	100	235C7-62221	128	235H0-40021	200	235H0-50101	204
235C6-50011	103	235C7-62231	128	235H0-40022	200	235H0-50111	204
235C6-50101	103	235C7-62241	128	235H0-40031	200	235H0-50121	204
235C6-52101	103	235C7-80201	133	235H0-40032	200	235H0-50131	204
235C6-52111	103	235C7-82101	131	235H0-40041	200	235H0-50141	204
235C6-52201	103	235C7-82101	132	235H0-40042	200	235H0-50151	204
235C6-52301	103	235C7-82121	131	235H0-40051	200	235H0-50161	204
235C7-22011	108	235C8-50001	136A	235H0-40052	200	235H0-50201	204
235C7-22051	108	235C8-50011	136A	235H0-40061	200	235H0-50211	204
235C7-22061	108	235C8-50021	136A	235H0-40062	200	235H0-50221	204

PARTS NUMBER INDEX

Part No.	Fig.No.	Part No.	Fig.No.	Part No.	Fig.No.	Part No.	Fig.No.
235H0-50231	204	235H0-70281	219	235H6-42061	102	235H8-40021	175
235H0-50241	204	235H0-70291	219	235H6-42061	102	235H8-40031	175
235H0-50251	204	235H0-70301	219	235H7-62031	126	235H8-40041	175
235H0-50261	204	235H0-70311	219	235H7-62041	126	235H8-40051	175
235H0-50271	204	235H0-70401	219	235H8-20001	172	235H8-40061	175
235H0-50281	204	235H0-70411	219	235H8-22301	172	235H8-40071	175
235H0-50291	204	235H0-70421	219	235H8-22301	199	235H8-40081	175
235H0-50301	204	235H0-70431	219	235H8-22301	218	235H8-40091	175
235H0-50311	204	235H0-70441	219	235H8-30001	173	235H8-40101	175
235H0-50321	204	235H0-70451	219	235H8-30002	173	235H8-40111	175
235H0-50331	204	235H0-70461	219	235H8-30011	173	235H8-40121	175
235H0-50341	204	235H0-70471	219	235H8-30012	173	235H8-40131	175
235H0-50351	204	235H0-70481	219	235H8-30021	173	235H8-40141	175
235H0-50361	204	235H0-70491	219	235H8-30022	173	235H8-40151	175
235H0-51001	204	235H0-70501	219	235H8-30031	173	235H8-40161	175
235H0-51011	204	235H0-70511	219	235H8-30032	173	235H8-40201	175
235H0-51021	204	235H0-90001	218	235H8-30041	173	235H8-40211	175
235H0-51031	204	235H0-93011	223	235H8-30042	173	235H8-40221	175
235H0-51041	204	235H0-93021	223	235H8-30051	173	235H8-40231	175
235H0-51051	204	235H0-93031	223	235H8-30052	173	235H8-40241	175
235H0-51061	204	235H0-93041	223	235H8-30061	173	235H8-40251	175
235H0-51071	204	235H0-93051	223	235H8-30062	173	235H8-40261	175
235H0-51101	204	235H0-93061	223	235H8-30071	173	235H8-40271	175
235H0-51111	204	235H0-93071	223	235H8-30072	173	235H8-40501	175
235H0-51121	204	235H0-93081	223	235H8-30081	173	235H8-40501	204
235H0-51131	204	235H0-93091	223	235H8-30082	173	235H8-40501	222
235H0-51141	204	235H0-93101	223	235H8-30091	173	235H9-12011	137
235H0-51151	204	235H1-61101	199	235H8-30092	173	235H9-12011	138
235H0-51161	204	235H1-61111	199	235H8-30101	173	235H9-12201	137
235H0-51171	204	235H1-61121	199	235H8-30102	173	235H9-12201	138
235H0-60001	199	235H2-32001	14	235H8-30111	173	235H9-12211	137
235H0-61001	199	235H2-32051	13	235H8-30112	173	235H9-12211	138
235H0-61101	205	235H2-32051	14	235H8-30121	173	235L1-00011	2
235H0-61111	205	235H2-42101	19	235H8-30122	173	235L1-00101	2
235H0-61121	205	235H2-42101	22	235H8-30131	173	235L1-02021	3
235H0-61131	205	235H2-42111	22	235H8-30132	173	235L1-02021	4
235H0-61141	205	235H2-42121	22	235H8-30141	173	235L2-12001	8
235H0-61151	205	235H2-42131	22	235H8-30142	173	235L2-12011	8
235H0-61161	205	235H2-42141	22	235H8-30151	173	235L2-12021	8
235H0-61171	205	235H2-42151	22	235H8-30152	173	235L2-12031	8
235H0-70001	219	235H2-42161	22	235H8-30161	173	235L2-12071	8
235H0-70011	219	235H4-22001	69	235H8-30162	173	235L2-20011	97
235H0-70021	219	235H4-22001	69	235H8-30201	173	235L2-32001	14
235H0-70031	219	235H4-22001	69	235H8-30202	173	235L2-40201	17
235H0-70041	219	235H5-40201	90	235H8-30211	173	235L2-40201	20
235H0-70051	219	235H5-40201	90	235H8-30212	173	235L2-42011	20
235H0-70061	219	235H5-40201	92	235H8-30221	173	235L2-42021	20
235H0-70071	219	235H5-40201	92	235H8-30222	173	235L2-42023	20
235H0-70081	219	235H5-42101	92	235H8-30231	173	235L2-42051	20
235H0-70091	219	235H5-42101	92	235H8-30232	173	235L2-42071	20
235H0-70101	219	235H6-40101	101	235H8-30241	173	235L2-50201	46
235H0-70111	219	235H6-40101	102	235H8-30242	173	235L2-50201	48
235H0-70201	219	235H6-40101	102	235H8-30251	173	235L2-52101	46
235H0-70211	219	235H6-40201	101	235H8-30252	173	235L2-52101	48
235H0-70221	219	235H6-40201	102	235H8-30261	173	235L2-72301	20
235H0-70231	219	235H6-40201	102	235H8-30262	173	235L5-20001	87
235H0-70241	219	235H6-40301	101	235H8-30271	173	235L5-22041	87
235H0-70251	219	235H6-40301	102	235H8-30272	173	235L7-22011	108
235H0-70261	219	235H6-40301	102	235H8-40001	175	235M2-42011	20
235H0-70271	219	235H6-42061	101	235H8-40011	175	235M2-42021	20

PARTS NUMBER INDEX

Part No.	Fig.No.	Part No.	Fig.No.	Part No.	Fig.No.	Part No.	Fig.No.
235M2-42023	20	23655-42421	90	23818-20701	153	23818-30301	163
235M2-42031	19	23658-52401	136	23818-20701	157	23818-30301	168
235M2-42031	20	23658-52401	136A	23818-20701	158	23818-30301	173
235M2-72301	20	23659-12053	137	23818-20701	158	23818-30301	178
235N2-42001	20	23659-12054	137	23818-20701	162	23818-30301	184
235N2-42021	20	23659-12101	137	23818-20701	163	23818-30301	189
235N2-42101	20	23659-12101	138	23818-20701	163	23818-30301	195
235N2-42101	22	23659-12101	138	23818-20701	167	23818-30301	200
235N2-42111	22	23659-32011	22	23818-20701	168	23819-20011	139
23642-20043	97	23659-32021	22	23818-20701	168	23819-20011	139
23647-40121	90	23670-62301	187	23818-20701	172	23819-20011	140
23648-50161	153	23670-62301	198	23818-20701	173	23819-20021	139
23648-50161	158	23678-06002	153	23818-20701	173	23819-20021	139
23648-50161	163	23678-06002	158	23818-20701	177	23819-20021	140
23648-50161	168	23678-06002	163	23818-20701	178	23862-22021	10
23648-50161	173	23678-06002	168	23818-20701	178	23862-22021	12
23648-50161	178	23678-06002	173	23818-20701	183	23870-52821	43
23648-50161	181	23678-06002	178	23818-20701	184	23870-52821	56
23648-50161	184	23678-06002	184	23818-20701	184	23870-52871	133
23648-50161	186	23678-06002	189	23818-20701	188	23870-52871	181
23648-50161	189	23678-06002	195	23818-20701	189	23870-52871	185
23648-50161	192	23678-06002	200	23818-20701	189	23870-52871	186
23648-50161	195	23678-06002	207	23818-20701	194	23870-52871	192
23648-50161	197	23678-06002	213	23818-20701	195	23870-52871	196
23648-50161	200	23678-06002	219	23818-20701	195	23870-52871	197
23648-50161	204	23678-42411	156	23818-20701	199	23870-52871	204
23648-50161	207	23678-42411	161	23818-20701	200	23870-52871	47
23648-50161	213	23678-42411	166	23818-20701	200	23870-52871	49
23648-50161	219	23678-42411	171	23818-20701	219	23870-52871	51
23652-12051	7	23678-42411	176	23818-30071	153	23870-52871	52
23652-12051	8	23678-42411	211	23818-30071	158	23870-52871	53
23652-12051	13	23678-42411	217	23818-30071	163	23870-52871	54
23652-12051	14	23678-42411	223	23818-30071	168	23870-52871	55
23652-12051	15	23679-43831	210	23818-30071	173	239A9-92001	174
23652-12051	16	23679-43831	216	23818-30071	178	239A9-92001	220
23652-23051	9	23679-43831	222	23818-30071	184	239A9-92001	154A
23652-23051	9	23743-02061	58	23818-30071	189	239A9-92001	164A
23652-23051	9	23743-02061	59	23818-30071	195	239A9-92001	179A
23652-23051	10	23743-02071	58	23818-30071	200	239A9-92001	190A
23652-23051	11	23743-02071	59	23818-30071	207	239A9-92001	208A
23652-23051	11	23743-02082	58	23818-30071	213	239A9-92001	214A
23652-23051	12	23743-02082	59	23818-30071	219	23912-22031	9
23652-42221	19	23772-12071	7	23818-30271	155	23913-02041	72
23652-42221	20	23772-12071	8	23818-30271	160	23914-40102	74
23652-44001	18	23812-42002	18	23818-30271	165	23914-40102	77
23652-44001	19	23812-42002	19	23818-30271	170	23914-40202	74
23652-44001	19	23813-00071	72	23818-30271	175	23914-40202	77
23652-44001	20	23813-00081	72	23818-30271	180	23914-40302	73
23654-32081	70	23814-30064	70	23818-30271	185	23914-40302	74
23654-32081	70	23814-30064	70	23818-30271	191	23914-40302	74
23654-32081	70	23814-30064	70	23818-30271	196	23914-40302	77
23654-52021	69	23814-30064	71	23818-30271	203	23914-42021	73
23654-52021	69	23814-40251	73	23818-30271	209	23914-42021	74
23654-52021	69	23814-40251	74	23818-30271	210	23914-42021	74
23655-22101	100	23814-40302	79	23818-30271	215	23914-42021	77
23655-22101	87	23814-40302	80	23818-30271	216	23916-12422	95
23655-22101	88	23814-40311	79	23818-30271	221	23917-42091	116
23655-42421	89	23814-40311	80	23818-30271	222	23917-42101	117
23655-42421	89	23818-20701	152	23818-30301	153	23917-42111	118
23655-42421	90	23818-20701	153	23818-30301	158	23917-42161	116

PARTS NUMBER INDEX

Part No.	Fig.No.	Part No.	Fig.No.	Part No.	Fig.No.	Part No.	Fig.No.
23917-42161	117	23918-45591	203	23918-45891	170	23918-46171	160
23917-42161	118	23918-45591	209	23918-45891	203	23918-46171	165
23917-42161	119	23918-45611	180	23918-45891	209	23918-46171	175
23917-42191	210	23918-45611	180	23918-45891	210	23918-46171	180
23917-42191	216	23918-45611	191	23918-45911	155	23918-46171	191
23917-42191	222	23918-45611	203	23918-45911	170	23918-46171	203
23918-42681	155	23918-45611	215	23918-45911	180	23918-46171	216
23918-42681	160	23918-45611	221	23918-45911	180	23918-46191	155
23918-42681	165	23918-45631	185	23918-45911	191	23918-46191	160
23918-42681	170	23918-45631	196	23918-45931	221	23918-46191	175
23918-42681	175	23918-45631	203	23918-45951	165	23918-46191	180
23918-42681	180	23918-45631	209	23918-45951	180	23918-46191	210
23918-42681	185	23918-45651	180	23918-45951	191	23918-46191	210
23918-42681	191	23918-45651	180	23918-45951	203	23918-46191	216
23918-42681	196	23918-45651	191	23918-45951	209	23918-46191	222
23918-42681	203	23918-45651	215	23918-45951	215	23918-46211	155
23918-42681	209	23918-45651	221	23918-45951	216	23918-46211	165
23918-42681	210	23918-45671	180	23918-45971	160	23918-46211	170
23918-42681	215	23918-45671	191	23918-45971	175	23918-46211	222
23918-42681	216	23918-45671	203	23918-45971	180	23918-46231	155
23918-42681	221	23918-45671	209	23918-45971	222	23918-46231	155
23918-42681	222	23918-45691	180	23918-45991	155	23918-46231	160
23918-42921	170	23918-45691	180	23918-45991	160	23918-46231	170
23918-45491	180	23918-45691	180	23918-45991	210	23918-46251	160
23918-45491	191	23918-45691	180	23918-46011	155	23918-46251	165
23918-45491	203	23918-45691	191	23918-46011	170	23918-46251	175
23918-45511	180	23918-45691	191	23918-46011	221	23918-46251	216
23918-45511	180	23918-45691	203	23918-46031	165	23918-46251	216
23918-45511	185	23918-45691	203	23918-46031	170	23918-46271	160
23918-45511	191	23918-45691	221	23918-46031	209	23918-46271	165
23918-45511	196	23918-45711	180	23918-46031	215	23918-46271	165
23918-45511	203	23918-45711	209	23918-46051	160	23918-46271	170
23918-45531	180	23918-45711	215	23918-46051	165	23918-46271	175
23918-45531	180	23918-45711	215	23918-46051	175	23918-46271	210
23918-45531	185	23918-45711	221	23918-46051	210	23918-46271	222
23918-45531	191	23918-45731	209	23918-46051	216	23918-46271	222
23918-45531	196	23918-45751	203	23918-46051	216	23918-46291	160
23918-45531	203	23918-45771	180	23918-46071	160	23918-46291	170
23918-45531	203	23918-45771	180	23918-46071	170	23918-46291	175
23918-45531	209	23918-45771	191	23918-46071	175	23918-46291	175
23918-45531	215	23918-45791	160	23918-46071	180	23918-46291	210
23918-45531	221	23918-45791	209	23918-46071	191	23918-46311	155
23918-45551	180	23918-45791	210	23918-46071	203	23918-46311	160
23918-45551	180	23918-45791	215	23918-46071	222	23918-46311	170
23918-45551	180	23918-45791	221	23918-46091	160	23918-46311	210
23918-45551	185	23918-45811	170	23918-46091	160	23918-46331	155
23918-45551	191	23918-45811	180	23918-46091	180	23918-46331	170
23918-45551	196	23918-45811	191	23918-46091	215	23918-46331	216
23918-45551	215	23918-45811	203	23918-46091	216	23918-46351	165
23918-45551	221	23918-45831	180	23918-46091	221	23918-46351	170
23918-45571	185	23918-45851	180	23918-46111	155	23918-46351	210
23918-45571	196	23918-45851	191	23918-46111	170	23918-46351	216
23918-45571	209	23918-45851	203	23918-46111	209	23918-46351	222
23918-45571	215	23918-45871	160	23918-46111	210	23918-46371	155
23918-45571	221	23918-45871	180	23918-46131	155	23918-46371	165
23918-45591	180	23918-45871	215	23918-46131	170	23918-46371	175
23918-45591	180	23918-45871	221	23918-46131	170	23918-46371	216
23918-45591	185	23918-45871	222	23918-46131	210	23918-46371	216
23918-45591	191	23918-45891	160	23918-46131	222	23918-46371	222
23918-45591	196	23918-45891	160	23918-46151	165	23918-46391	155

Part No.	Fig.No.	Part No.	Fig.No.	Part No.	Fig.No.	Part No.	Fig.No.
23918-46391	175	24230-52701	185	24310-82281	215	24320-60601	182
23918-46391	222	24230-52701	187	24310-82281	221	24320-60601	187
23918-46391	222	24230-52701	193	24310-82291	180	24320-60601	193
23918-46411	155	24230-52701	196	24310-82291	191	24320-60601	198
23918-46411	160	24230-52701	198	24310-82291	203	24320-60601	205
23918-46411	165	24230-52701	205	24310-82291	209	24320-63601	187
23918-46411	216	24230-82071	185	24310-82291	215	24320-63601	198
23918-46431	155	24230-82071	196	24310-82291	221	24328-10503	152
23918-46431	165	24232-42051	18	24310-82641	180	24328-10503	157
23918-46431	175	24232-42051	19	24310-82641	191	24328-10503	177
23918-46431	222	24232-42051	20	24310-82641	203	24328-10503	183
23918-46451	155	24234-30551	69	24310-82641	209	24328-10503	206
23918-46451	165	24234-30551	69	24310-82641	215	24328-10513	152
23918-46451	170	24234-30551	69	24310-82641	221	24328-10513	152
23918-46451	175	24235-42091	89	24310-92571	182	24328-10513	157
23918-46471	165	24235-42091	90	24310-92571	193	24328-10513	157
23918-46471	175	24252-42011	19	24310-92571	211	24328-10513	177
23918-46491	165	24252-42011	20	24310-92571	211	24328-10513	206
23918-46491	175	24255-22101	87	24310-92571	217	24328-10514	152
23918-46511	175	24255-22101	88	24310-92571	217	24328-10514	152
23918-46551	155	24258-33401	152	24310-92571	223	24328-10514	157
23918-46571	165	24258-33401	152	24310-92571	223	24328-10514	157
23918-46611	175	24258-33401	152	24318-42011	84	24328-10514	177
23918-52131	185	24258-33401	152	24319-40152	172	24328-10514	177
23918-52131	196	24258-33401	157	24319-40152	177	24328-10514	183
23954-40102	73	24258-33401	157	24319-40152	183	24328-10514	183
23954-40102	74	24258-33401	157	24319-40152	194	24328-10514	206
23954-40302	73	24258-33401	157	24319-45751	155	24328-10514	206
23954-40302	74	24258-33401	162	24319-45751	160	24328-10523	152
23954-42011	73	24258-33401	162	24319-45751	165	24328-10523	157
23954-42011	74	24258-33401	162	24319-45751	170	24328-10523	177
23958-22081	152	24258-33401	167	24319-45751	175	24328-10523	183
23958-22081	153	24258-33401	167	24319-45751	209	24328-10523	206
23958-22081	157	24258-33401	167	24319-45751	210	24328-10533	152
23958-22081	158	24258-33401	172	24319-45751	215	24328-10533	157
23958-22081	162	24258-33401	177	24319-45751	216	24328-10533	177
23958-22081	163	24258-33401	177	24319-45751	221	24328-10533	183
23958-22081	167	24258-33401	177	24319-45751	222	24328-10533	206
23958-22081	168	24258-33401	177	24319-45781	155	24328-10543	152
23958-22081	172	24258-33401	188	24319-45781	160	24328-10543	157
23958-22081	173	24258-33401	188	24319-45781	165	24328-10543	177
23958-22081	177	24258-33401	188	24319-45781	170	24328-10543	206
23958-22081	178	24258-33401	188	24319-45781	175	24328-10544	152
23958-22081	183	24258-33401	199	24319-45791	155	24328-10544	157
23958-22081	184	24258-33401	199	24319-45791	160	24328-10544	177
23958-22081	188	24258-33401	199	24319-45791	165	24328-10544	183
23958-22081	189	24258-33401	206	24319-45791	170	24328-10544	206
23958-22081	194	24258-33401	206	24319-45791	175	24328-10553	152
23958-22081	195	24258-33401	206	24320-55001	185	24328-10553	157
23958-22081	199	24258-33401	206	24320-55001	196	24328-10553	177
23958-22081	200	24258-33401	212	24320-58491	180	24328-10553	206
23958-22081	219	24258-33401	212	24320-58491	209	24328-10554	152
23958-42921	155	24258-33401	212	24320-58521	182	24328-10554	157
23958-42921	160	24258-33401	212	24320-58521	193	24328-10554	177
23958-42921	210	24258-33401	218	24320-58521	205	24328-10554	183
23958-42921	216	24310-62001	162	24320-58581	182	24328-10554	206
23958-42921	222	24310-80271	209	24320-58581	187	24328-10563	152
23967-82011	131	24310-80271	215	24320-58581	193	24328-10563	157
23967-82011	132	24310-80271	221	24320-58581	198	24328-10563	177
24230-52701	182	24310-82281	209	24320-58581	205	24328-10563	206

PARTS NUMBER INDEX

Part No.	Fig.No.	Part No.	Fig.No.	Part No.	Fig.No.	Part No.	Fig.No.
24328-10564	152	24328-12304	152	24328-12373	157	24328-40110	223
24328-10564	157	24328-12304	157	24328-12373	177	24328-40120	156
24328-10564	177	24328-12304	177	24328-12373	206	24328-40120	156
24328-10564	183	24328-12304	183	24328-12374	152	24328-40120	161
24328-10564	206	24328-12304	206	24328-12374	157	24328-40120	161
24328-10573	152	24328-12313	152	24328-12374	177	24328-40120	166
24328-10573	157	24328-12313	157	24328-12374	183	24328-40120	166
24328-10573	177	24328-12313	177	24328-12374	206	24328-40120	171
24328-10573	206	24328-12313	206	24328-12383	152	24328-40120	171
24328-10574	152	24328-12314	152	24328-12383	157	24328-40120	176
24328-10574	157	24328-12314	157	24328-12383	177	24328-40120	176
24328-10574	177	24328-12314	177	24328-12383	206	24328-40120	211
24328-10574	183	24328-12314	183	24328-12384	152	24328-40120	211
24328-10574	206	24328-12314	206	24328-12384	157	24328-40120	217
24328-10583	152	24328-12323	152	24328-12384	177	24328-40120	217
24328-10583	157	24328-12323	157	24328-12384	183	24328-40120	223
24328-10583	177	24328-12323	177	24328-12384	206	24328-40120	223
24328-10583	206	24328-12323	206	24328-12393	152	24328-40130	156
24328-10584	152	24328-12324	152	24328-12393	157	24328-40130	156
24328-10584	157	24328-12324	157	24328-12393	177	24328-40130	161
24328-10584	177	24328-12324	177	24328-12393	206	24328-40130	161
24328-10584	183	24328-12324	183	24328-12394	152	24328-40130	166
24328-10584	206	24328-12324	206	24328-12394	157	24328-40130	166
24328-10593	152	24328-12333	152	24328-12394	177	24328-40130	171
24328-10593	157	24328-12333	157	24328-12394	183	24328-40130	171
24328-10593	177	24328-12333	177	24328-12394	206	24328-40130	176
24328-10593	206	24328-12333	206	24328-12603	177	24328-40130	176
24328-10594	152	24328-12334	152	24328-12604	177	24328-40130	211
24328-10594	157	24328-12334	157	24328-12604	183	24328-40130	211
24328-10594	177	24328-12334	177	24328-40070	211	24328-40130	217
24328-10594	183	24328-12334	183	24328-40070	217	24328-40130	217
24328-10594	206	24328-12334	206	24328-40070	223	24328-40130	223
24328-10603	152	24328-12343	152	24328-40080	156	24328-40130	223
24328-10603	157	24328-12343	157	24328-40080	161	24328-40135	211
24328-10603	206	24328-12343	177	24328-40080	166	24328-40135	217
24328-10604	152	24328-12343	206	24328-40080	171	24328-40135	223
24328-10604	157	24328-12344	152	24328-40080	176	24328-40140	156
24328-10604	206	24328-12344	157	24328-40080	211	24328-40140	156
24328-10613	152	24328-12344	177	24328-40080	217	24328-40140	156
24328-10613	157	24328-12344	183	24328-40080	223	24328-40140	161
24328-10613	177	24328-12344	206	24328-40090	156	24328-40140	161
24328-10613	206	24328-12353	152	24328-40090	161	24328-40140	161
24328-10614	152	24328-12353	157	24328-40090	166	24328-40140	166
24328-10614	157	24328-12353	177	24328-40090	171	24328-40140	166
24328-10614	177	24328-12353	206	24328-40090	176	24328-40140	166
24328-10614	183	24328-12354	152	24328-40095	156	24328-40140	171
24328-10614	206	24328-12354	157	24328-40095	161	24328-40140	171
24328-10623	152	24328-12354	177	24328-40095	166	24328-40140	171
24328-10623	157	24328-12354	183	24328-40095	171	24328-40140	176
24328-10623	177	24328-12354	206	24328-40095	176	24328-40140	176
24328-10623	206	24328-12363	152	24328-40095	211	24328-40145	156
24328-10624	152	24328-12363	157	24328-40095	217	24328-40145	156
24328-10624	157	24328-12363	177	24328-40095	223	24328-40145	161
24328-10624	177	24328-12363	206	24328-40105	156	24328-40145	161
24328-10624	183	24328-12364	152	24328-40105	161	24328-40145	166
24328-10624	206	24328-12364	157	24328-40105	166	24328-40145	166
24328-12303	152	24328-12364	177	24328-40105	171	24328-40145	171
24328-12303	157	24328-12364	183	24328-40105	176	24328-40145	171
24328-12303	177	24328-12364	206	24328-40110	211	24328-40145	176
24328-12303	206	24328-12373	152	24328-40110	217	24328-40145	176

Part No.	Fig.No.	Part No.	Fig.No.	Part No.	Fig.No.	Part No.	Fig.No.
24328-40145	211	24328-40190	166	24328-40250	166	24329-45561	198
24328-40145	217	24328-40190	166	24328-40250	171	24329-46052	156
24328-40145	223	24328-40190	171	24328-40250	176	24329-46052	161
24328-40155	156	24328-40190	171	24328-40260	156	24329-46052	166
24328-40155	161	24328-40190	176	24328-40260	161	24329-46052	171
24328-40155	166	24328-40190	211	24328-40260	166	24329-46052	176
24328-40155	171	24328-40190	217	24328-40260	171	24329-46052	211
24328-40155	176	24328-40190	223	24328-40260	176	24329-46052	217
24328-40155	211	24328-40195	156	24328-40265	156	24329-46052	223
24328-40155	217	24328-40195	161	24328-40265	161	24329-46201	156
24328-40155	223	24328-40195	166	24328-40265	166	24329-46201	161
24328-40160	156	24328-40195	171	24328-40265	171	24329-46201	166
24328-40160	161	24328-40195	176	24328-40265	176	24329-46201	171
24328-40160	166	24328-40200	156	24328-40265	211	24329-46201	176
24328-40160	171	24328-40200	161	24328-40265	217	24329-46201	211
24328-40160	176	24328-40200	166	24328-40265	223	24329-46201	217
24328-40160	211	24328-40200	171	24328-40280	211	24329-46201	223
24328-40160	217	24328-40200	176	24328-40280	217	24329-46211	156
24328-40160	223	24328-40205	211	24328-40280	223	24329-46211	161
24328-40170	156	24328-40205	217	24328-40290	156	24329-46211	166
24328-40170	156	24328-40205	223	24328-40290	161	24329-46211	171
24328-40170	161	24328-40210	156	24328-40290	166	24329-46211	176
24328-40170	161	24328-40210	156	24328-40290	171	24329-46211	211
24328-40170	166	24328-40210	161	24328-40290	176	24329-46211	217
24328-40170	166	24328-40210	161	24328-40315	156	24329-46211	223
24328-40170	171	24328-40210	166	24328-40315	161	24351-00111	5
24328-40170	171	24328-40210	166	24328-40315	166	24351-02221	5
24328-40170	176	24328-40210	171	24328-40315	171	24351-02221	6
24328-40170	176	24328-40210	171	24328-40315	176	24351-02231	5
24328-40170	211	24328-40210	176	24329-45441	155	24351-02231	6
24328-40170	217	24328-40210	176	24329-45441	160	24351-02241	4
24328-40170	223	24328-40215	211	24329-45441	165	24351-02241	5
24328-40175	156	24328-40215	217	24329-45441	170	24351-02241	6
24328-40175	161	24328-40215	223	24329-45441	175	24352-42441	22
24328-40175	166	24328-40225	156	24329-45441	180	24352-42451	22
24328-40175	171	24328-40225	161	24329-45441	185	24352-42521	18
24328-40175	176	24328-40225	166	24329-45441	191	24352-42521	19
24328-40175	211	24328-40225	171	24329-45441	196	24352-42531	18
24328-40175	217	24328-40225	176	24329-45441	203	24352-42531	19
24328-40175	223	24328-40225	211	24329-45441	209	24352-42551	18
24328-40180	156	24328-40225	217	24329-45441	210	24352-42551	19
24328-40180	161	24328-40225	223	24329-45441	215	24352-42552	18
24328-40180	166	24328-40230	211	24329-45441	216	24352-42552	19
24328-40180	171	24328-40230	217	24329-45441	221	24353-72001	58
24328-40180	176	24328-40230	223	24329-45441	222	24354-32311	72
24328-40180	211	24328-40235	156	24329-45531	165	24354-42301	70
24328-40180	217	24328-40235	161	24329-45531	170	24354-42301	70
24328-40180	223	24328-40235	166	24329-45531	175	24354-42301	70
24328-40185	156	24328-40235	171	24329-45531	216	24354-42301	71
24328-40185	161	24328-40235	176	24329-45531	222	24356-13011	182
24328-40185	166	24328-40240	156	24329-45541	165	24356-13011	187
24328-40185	171	24328-40240	161	24329-45541	170	24356-13011	193
24328-40185	176	24328-40240	166	24329-45541	175	24356-13011	198
24328-40185	211	24328-40240	171	24329-45541	216	24356-13011	205
24328-40185	217	24328-40240	176	24329-45541	222	24356-32171	98
24328-40185	223	24328-40240	211	24329-45541	46	24359-12001	137
24328-40190	156	24328-40240	217	24329-45541	47	24359-12001	138
24328-40190	156	24328-40240	223	24329-45541	48	24359-12001	138
24328-40190	161	24328-40250	156	24329-45541	49	24359-12001	138
24328-40190	161	24328-40250	161	24329-45561	187	24389-46011	180

PARTS NUMBER INDEX

Part No.	Fig.No.	Part No.	Fig.No.	Part No.	Fig.No.	Part No.	Fig.No.
24389-46011	191	24609-41241	155	24609-42161	194	25592-13021	8
24389-46011	203	24609-41241	160	24609-42161	199	25592-22051	9
24389-46011	209	24609-41241	165	24609-42161	206	25592-22051	10
24389-46011	215	24609-41241	170	24609-42161	212	25592-22051	11
24389-46011	221	24609-41241	175	24609-42161	218	25592-22051	12
24389-46021	180	24609-41241	180	24609-43631	156	25592-42121	18
24389-46021	191	24609-41241	191	24609-43631	161	25592-42121	19
24389-46021	203	24609-41241	203	24609-43631	166	25592-42121	20
24389-46021	209	24609-41241	209	24609-43631	171	25595-42071	89
24389-46021	215	24609-41241	210	24609-43631	176	25595-42071	90
24389-46021	221	24609-41241	215	24609-43631	182	25596-42361	100
24389-46031	114	24609-41241	216	24609-43631	187	25596-42361	149
24389-46031	115	24609-41241	221	24609-43631	193	25596-42361	22
244T8-44001	217	24609-41241	222	24609-43631	198	25596-42361	29
244T8-44001	223	24609-42111	206	24609-43631	205	25596-42361	29
24402-42051	20	24609-42111	207	24609-43631	211	25596-82031	104
24402-42052	20	24609-42111	212	24609-43631	217	25596-82041	104
24405-22021	87	24609-42111	213	24609-43631	223	25596-82111	104
24405-22021	88	24609-42111	218	24609-43671	187	25596-82121	104
24450-82241	185	24609-42111	219	24609-43671	198	25596-82201	104
24450-82241	196	24609-42121	206	24609-43682	156	25597-62201	35
24450-82251	185	24609-42121	207	24609-43682	161	25597-62201	36
24450-82251	196	24609-42121	212	24609-43682	166	25599-22001	139
24450-92021	152	24609-42121	213	24609-43682	171	25599-22001	139
24450-92021	157	24609-42121	218	24609-43682	176	25599-22001	139
24450-92021	167	24609-42121	219	24609-43682	182	25599-22001	140
24450-92021	177	24609-42131	152	24609-43682	187	25599-22051	139
24450-92021	183	24609-42131	157	24609-43682	193	25599-22051	140
24450-92021	188	24609-42131	162	24609-43682	198	25599-22061	139
24450-92021	194	24609-42131	167	24609-43682	205	25599-22061	140
24450-92021	206	24609-42131	172	24609-43682	211	25599-32001	100
24450-92021	212	24609-42131	177	24609-43682	217	25599-32021	100
24453-02061	58	24609-42131	183	24609-43682	223	256C2-92021	1
24453-02061	59	24609-42131	188	24611-02181	43	256C2-92021	2
24459-22011	139	24609-42131	194	24617-82021	131	256C5-12421	148
24459-22011	139	24609-42131	199	24634-30601	71	256C5-62551	40
24459-22011	140	24609-42131	206	25176-12371	70	256C9-52372	108
24459-42291	181	24609-42131	212	25176-12371	70	25781-02101	5
24459-42951	156	24609-42131	218	25176-12371	70	25782-42111	18
24459-42951	161	24609-42151	152	25176-12371	71	25782-42111	19
24459-42951	166	24609-42151	157	25176-12451	70	25782-42181	18
24459-42951	171	24609-42151	162	25176-12451	70	25782-42181	19
24459-42951	176	24609-42151	167	25176-12451	70	25782-42931	31
24459-42951	182	24609-42151	172	25176-12451	71	25782-42931	32
24459-42951	187	24609-42151	177	25277-82012	133	25784-32411	70
24459-42951	193	24609-42151	183	25277-82012	135	25784-32411	70
24459-42951	198	24609-42151	188	25277-82012	42	25784-32411	70
24459-42951	205	24609-42151	194	25277-82012	42	25784-32411	71
24459-42951	211	24609-42151	199	25277-82012	43	25784-32421	70
24459-42951	217	24609-42151	206	25278-42001	84	25784-32421	70
24459-42951	223	24609-42151	212	25302-42251	29	25784-32421	70
24469-42721	185	24609-42151	218	25302-42251	29	25784-32421	71
24469-42721	196	24609-42161	152	25302-42251	30	25784-52261	83
24600-92251	217	24609-42161	157	25307-60401	114	25784-52261	83
24602-42111	134	24609-42161	162	25307-60401	115	25784-52261	83
24602-42111	151	24609-42161	167	25307-82261	131	25784-52261	83
24602-42111	18	24609-42161	172	25369-47201	150	25785-22031	87
24602-42111	19	24609-42161	177	25369-48081	150	25785-22111	87
24603-02021	58	24609-42161	183	25412-22001	9	25785-22111	88
24607-82141	131	24609-42161	188	25592-13021	7	25786-40651	149

PARTS NUMBER INDEX

Part No.	Fig.No.	Part No.	Fig.No.	Part No.	Fig.No.	Part No.	Fig.No.
25787-80301	131	25790-83311	216	25908-44111	221	26314-17021	67
25787-80301	132	25790-83311	222	25908-44111	222	26402-37011	3
25787-82001	126	25790-83322	216	25908-44281	155	26402-42191	19
25787-82001	127	25790-83322	222	25908-44281	160	26402-42191	31
25787-82011	132	25790-83341	216	25908-44281	165	26402-42191	31
25788-10103	199	25790-83341	222	25908-44281	170	26402-42191	32
25788-10103	199	25790-83351	216	25908-44281	175	26402-42191	40
25788-10113	199	25790-83351	222	25908-44281	210	26609-17361	37
25788-10123	199	25808-43121	136	25908-44281	216	26609-17371	37
25788-10133	199	25808-43121	136A	25908-44281	222	26816-73091	150
25788-10143	199	25808-49811	136	25908-44461	187	27016-80602	107
25788-10153	199	25808-49811	136A	25908-44461	198	27029-12202	138
25788-10163	199	25812-42011	22	25951-02031	4	27042-42292	18
25788-10173	199	25812-42151	22	25951-02031	5	27042-42292	19
25788-10304	218	25812-42161	22	25951-02031	6	27042-42292	20
25788-10304	218	25814-32051	70	25952-32011	13	27042-42292	87
25788-10305	172	25814-32051	70	25952-42031	18	27042-42292	88
25788-10305	172	25814-32051	70	25952-42031	19	27042-42312	132
25788-10314	218	25814-32051	71	25954-50232	83	27042-42312	134
25788-10315	172	25815-42151	89	25954-50232	83	27042-42312	18
25788-10324	218	25816-42761	148	25954-50242	83	27042-42312	19
25788-10325	172	25844-32401	70	25954-50242	83	27042-42312	20
25788-10334	218	25844-32401	70	25954-50242	83	27042-42312	23
25788-10335	172	25844-32401	70	25954-52021	83	27042-42312	35
25788-10344	218	25844-32401	71	25954-52021	83	27042-42312	39
25788-10345	172	25902-12301	102	25954-52041	83	27042-42312	40
25788-10354	218	25904-50211	83	25954-52041	83	27042-63101	63
25788-10355	172	25904-50211	83	25954-52061	83	27042-63111	141
25788-10364	218	25904-50211	83	25954-52061	83	27042-63291	63
25788-10365	172	25904-50232	71	25954-52071	83	27042-63661	63
25788-10374	218	25908-44101	165	25954-52071	83	27042-64311	23
25788-10375	172	25908-44101	170	25954-52081	83	27042-64311	40
25788-11001	172	25908-44101	175	25954-52081	83	27047-42241	88
25788-11001	199	25908-44101	180	25954-52091	83	271A2-42401	22
25788-11001	218	25908-44101	181	25954-52091	83	271A2-62051	25
25788-12301	172	25908-44101	186	25954-59802	83	271A9-12251	137
25788-12301	199	25908-44101	191	25954-59802	83	271F4-12231	68
25788-12301	218	25908-44101	192	25954-59802	83	271F4-12241	68
25788-12501	172	25908-44101	197	25957-52031	96	27222-62021	35
25788-12501	199	25908-44101	203	25957-60551	114	27262-42092	35
25788-12501	218	25908-44101	204	25957-60551	115	273A9-12242	137
25788-12511	172	25908-44101	209	25957-60561	114	273A9-12242	138
25788-12511	199	25908-44101	215	25957-62011	108	27397-52101	44
25788-12511	218	25908-44101	216	25957-62201	9	27397-52101	47
25788-12521	172	25908-44101	221	25967-82111	131	27397-52101	49
25788-12521	199	25908-44101	222	26062-42881	20	27412-42301	22
25788-12521	218	25908-44111	165	26062-42881	31	27412-42301	27
25788-12531	172	25908-44111	170	26062-42881	31	27412-42331	22
25788-12531	199	25908-44111	175	26062-42881	32	27412-42331	27
25788-12531	218	25908-44111	180	26062-42881	33	27412-42371	27
25788-12541	172	25908-44111	181	26062-42881	33	27415-52151	94
25788-12541	199	25908-44111	186	26062-42881	40	27419-12061	138
25788-12541	218	25908-44111	191	26094-17001	67	27419-12062	137
25788-12551	172	25908-44111	192	26094-17021	67	27419-12071	138
25788-12551	199	25908-44111	197	26094-17081	67	27419-12072	137
25788-12551	218	25908-44111	203	26094-17091	67	27419-43321	158
25788-42221	84	25908-44111	204	26094-17101	67	27419-43321	168
25788-42491	185	25908-44111	209	26094-17111	67	27662-62711	149
25788-42491	196	25908-44111	215	26094-17141	67	27662-63041	149
25789-12051	137	25908-44111	216	26314-17001	67	277H2-62081	63

Part No.	Fig.No.	Part No.	Fig.No.	Part No.	Fig.No.	Part No.	Fig.No.
277H2-62082	63	29189-42011	150	51240-52441	143	514A3-82361	138
277H2-62091	63	29189-42031	150	51240-52441	143A	514A3-82361	207
277H2-62092	63	29189-42091	150	51240-52451	143	514A3-82361	213
277H2-62101	63	29189-42521	150	51240-52451	143A	514A3-82371	138
277H2-62102	63	29349-42631	150	51240-52481	143	514A3-82371	207
277H2-62151	63	29502-42301	31	51240-52481	146	514A3-82371	213
277H2-62171	63	29502-42301	32	51240-52481	146	514A3-82381	138
277H2-62172	63	29502-62611	40	51240-52481	143A	514A3-82381	207
277H2-62181	63	3906199	22	51240-52491	143	514A3-82381	213
277H2-62191	63	3956323	38	51240-52491	143A	514A3-82391	138
277H2-62201	63	3978251	150	51240-52501	143	514A3-82391	207
277H2-62251	63	3978251	35	51240-52501	143A	514A3-82391	213
277H2-62261	63	51152-82001	138	51240-52511	143	514A3-82601	79
277H2-62271	63	51152-82001	138	51240-52511	143A	514A3-82601	80
277H2-62291	63	51153-02001	138	51240-52521	143	514A3-82601	80
277H6-42681	101	51230-52081	142	51240-52521	143A	514A3-82601	81
277H6-82001	104	51230-52091	143	51240-52531	143	514A3-82601	82
277H6-82011	104	51230-52091	143A	51240-52531	143A	514A5-12011	101
277H6-82021	104	51230-52101	142	51240-52551	143	514A5-12011	101
277H6-82031	104	51230-52111	142	51240-52551	143A	514A5-12011	102
277H6-82041	104	51230-52121	142	513A0-52342	146	514A5-12011	85
277H6-82051	104	51230-52131	142	513A0-52351	142	514A5-12011	85
277H6-82061	104	51230-52141	142	513A0-52361	142	514A5-12011	85
277H6-82071	104	51230-52151	142	513A0-52371	142	514A5-12021	174
277H6-82081	104	51230-52161	142	513A2-72201	138	514A5-12021	201
277H6-82091	104	51230-52171	142	514A1-41021	33	514A5-12021	220
277H6-82101	104	51230-52181	142	514A1-41031	33	514A5-12021	85
277H6-82111	104	51230-52311	142	514A1-41061	33	514A5-12021	154A
277H6-82121	104	51230-52311	142	514A1-41071	33	514A5-12021	164A
277H6-82131	104	51230-52321	142	514A1-42041	33	514A5-12021	179A
277H6-82141	104	51230-52331	142	514A1-42041	33	514A5-12021	190A
277H6-82151	104	51232-82001	138	514A2-71001	138	514A5-12021	208A
277H6-82161	104	51232-82001	138	514A2-71011	138	514A5-12021	214A
277H6-82171	104	51232-82011	138	514A2-71021	138	514A5-12101	85
277H6-82181	104	51232-82021	138	514A2-72251	11	514A5-12701	85
277H6-82191	104	51232-82031	138	514A2-72351	138	514A5-12701	99
277H6-82201	104	51232-82032	138	514A2-82001	138	514A5-13471	85
277P8-22051	207	51233-02011	138	514A2-82011	138	514A5-32011	102
27732-42221	174	51233-02021	138	514A3-02001	138	514A5-32301	141
27732-42221	201	51233-02031	138	514A3-82001	138	514A5-32481	149
27732-42221	220	51233-83021	138	514A3-82011	138	514A5-32491	149
27732-42221	35	51233-83221	138	514A3-82021	138	514A5-32601	149
27732-42221	36	51233-83421	138	514A3-82031	138	514A5-42041	141
27732-42221	154A	51233-83621	138	514A3-82041	138	514A5-42051	141
27732-42221	164A	51233-83821	138	514A3-82051	138	514A5-42051	149
27732-42221	179A	51240-50401	146	514A3-82061	138	514A7-10201	27
27732-42221	190A	51240-52131	143	514A3-82071	138	514A7-10201	31
27732-42221	208A	51240-52131	143A	514A3-82301	138	514A7-10201	32
27732-42221	214A	51240-52151	143	514A3-82301	207	514A7-10212	18
27732-42311	28	51240-52151	143	514A3-82301	213	514A7-10212	19
27732-42311	29	51240-52151	146	514A3-82321	138	514A7-10212	22
27732-42311	29	51240-52151	146	514A3-82331	138	514A7-12101	27
27732-42311	30	51240-52151	143A	514A3-82331	207	514E0-92081	85
27732-42311	31	51240-52151	143A	514A3-82331	213	514E0-92091	85
27732-42311	32	51240-52161	143	514A3-82341	138	514T6-82021	75
27732-42311	33	51240-52161	143A	514A3-82341	207	514T7-20201	36
27732-42311	34	51240-52411	143	514A3-82341	213	514T7-22061	35
27912-40301	23	51240-52411	143A	514A3-82351	138	514T7-22061	36
27978-42421	181	51240-52421	143	514A3-82351	207	514T7-52101	25
29149-47041	150	51240-52421	143A	514A3-82351	213	516G1-42021	24

PARTS NUMBER INDEX

Part No.	Fig.No.	Part No.	Fig.No.	Part No.	Fig.No.	Part No.	Fig.No.
516G1-42021	25	516G3-82891	138	522A2-12301	130	522A2-18391	93
516G1-42021	25	516G3-82901	138	522A2-12321	130	522A2-18401	92
516G1-42021	38	516G5-10701	85	522A2-13011	89	522A2-18411	92
516G1-42021	39	516G5-10701	85	522A2-13021	89	522A2-18471	92
516G1-42151	31	516G5-10901	85	522A2-18011	92	522A2-18481	92
516G1-42151	32	516G5-11001	85	522A2-18011	93	522A2-18491	92
516G1-42211	33	516G5-13051	85	522A2-18021	92	522A2-18501	92
516G2-62051	138	516G5-13151	85	522A2-18021	93	522A2-18511	92
516G2-72701	138	516G5-13511	85	522A2-18031	92	522A2-18521	92
516G2-72711	138	516G5-13601	85	522A2-18031	93	522A2-18531	92
516G2-72731	138	516G6-12051	38	522A2-18041	92	522A2-18541	91
516G2-82001	138	516G6-20101	17	522A2-18041	93	522A2-18551	91
516G2-82001	138	516G6-20201	17	522A2-18051	92	522A2-18561	91
516G2-82011	138	516G6-22011	26	522A2-18051	93	522A2-18571	91
516G2-82021	138	516G6-22011	26	522A2-18061	92	522A2-18581	91
516G2-82031	138	516G6-22031	17	522A2-18071	92	522A2-18591	91
516G2-82051	138	516G6-22051	17	522A2-18071	93	522A2-42001	26
516G2-82061	138	516G6-22051	17	522A2-18081	92	522A2-42001	26
516G2-82071	138	516G6-90401	38	522A2-18081	93	522A3-82061	18
516G3-82073	138	516G6-90401	39	522A2-18091	92	522A3-82061	19
516G3-82101	138	516G6-92001	39	522A2-18091	93	522A3-82441	138
516G3-82111	138	516G6-92021	39	522A2-18101	92	522A3-82491	138
516G3-82121	138	516G6-92031	39	522A2-18101	93	522A3-82501	138
516G3-82131	138	516G6-92151	39	522A2-18111	92	522A3-82641	138
516G3-82141	138	516G6-92201	39	522A2-18111	93	522A3-82651	138
516G3-82151	138	516G6-92211	39	522A2-18121	92	522A3-82841	138
516G3-82161	138	516G7-22001	36	522A2-18121	93	522A3-83041	138
516G3-82171	138	516G7-50401	24	522A2-18131	92	522A3-83051	138
516G3-82181	138	516G7-50401	25	522A2-18131	93	522A3-83061	138
516G3-82191	138	516G7-50401	25	522A2-18161	92	522A3-83081	138
516G3-82201	138	516G8-92011	31	522A2-18161	93	522A3-83091	138
516G3-82211	138	516G8-92011	32	522A2-18171	92	522A3-83101	138
516G3-82221	138	516G8-92011	33	522A2-18171	93	522A3-83241	138
516G3-82231	138	516G9-92101	151	522A2-18181	93	522A3-83251	138
516G3-82241	138	516G9-92101	28	522A2-18201	92	522A3-83281	138
516G3-82251	138	516G9-92101	30	522A2-18201	93	522A3-83291	138
516G3-82261	138	517H8-80101	17	522A2-18211	92	522A3-83301	138
516G3-82271	138	52050-53141	143	522A2-18211	93	522A3-83441	138
516G3-82281	138	52050-53141	143A	522A2-18221	93	522A3-83451	138
516G3-82291	138	52050-53171	143	522A2-18231	92	522A3-83461	138
516G3-82301	138	52050-53171	143A	522A2-18241	92	522A3-83481	138
516G3-82311	138	52050-59871	144	522A2-18251	92	522A3-83491	138
516G3-82321	138	521A0-52101	146	522A2-18261	92	522A3-83501	138
516G3-82331	138	521A2-42111	27	522A2-18271	92	522A3-83641	138
516G3-82341	138	521A2-42121	27	522A2-18281	93	522A3-83651	138
516G3-82351	138	521A2-42131	27	522A2-18291	92	522A3-83661	138
516G3-82361	138	521A2-42141	27	522A2-18301	92	522A3-83681	138
516G3-82371	138	521A2-42181	27	522A2-18301	93	522A3-83691	138
516G3-82381	138	52125-32651	149	522A2-18311	92	522A3-83701	138
516G3-82391	138	52155-32161	149	522A2-18321	92	522A3-83841	138
516G3-82401	138	522A1-10201	4	522A2-18321	93	522A3-83861	138
516G3-82801	138	522A1-10201	5	522A2-18331	92	522A3-83881	138
516G3-82811	138	522A1-10201	6	522A2-18331	93	522A3-83891	138
516G3-82821	138	522A1-42051	31	522A2-18341	93	522A3-83901	138
516G3-82831	138	522A1-42051	32	522A2-18351	93	522A5-30211	149
516G3-82841	138	522A1-42061	31	522A2-18361	93	522A5-30241	149
516G3-82851	138	522A1-42061	32	522A2-18371	92	522A5-30401	149
516G3-82861	138	522A2-10401	89	522A2-18371	93	522A5-30411	149
516G3-82871	138	522A2-10401	91	522A2-18381	92	522A5-30421	149
516G3-82881	138	522A2-11601	91	522A2-18391	92	522A5-30561	149

PARTS NUMBER INDEX

Part No.	Fig.No.	Part No.	Fig.No.	Part No.	Fig.No.	Part No.	Fig.No.
522A5-30571	149	523W0-52111	143A	524T1-64301	152	524T3-86111	153
522A5-30581	149	523W0-52121	143	524T1-64301	157	524T3-86112	153
522A5-30591	149	523W0-52122	143A	524T1-64301	162	524T3-86121	153
522A5-30601	149	523W0-52131	143	524T1-64301	167	524T3-86122	153
522A5-30611	149	523W0-52131	143A	524T1-64301	177	524T3-86131	153
522A5-30621	149	523W0-52141	143	524T1-64301	188	524T3-86132	153
522A5-30631	149	523W0-52141	143A	524T1-64301	206	524T3-86141	153
522A5-30641	149	523W0-52151	144	524T1-64301	212	524T3-86142	153
522A5-30651	149	523W0-52191	144	524T1-64311	152	524T3-86151	153
522A5-30681	149	523W0-52201	144	524T1-64311	157	524T3-86152	153
522A5-30691	149	523W0-52231	143	524T1-64311	162	524T3-86161	153
522A5-32201	149	523W0-52231	146	524T1-64311	167	524T3-86162	153
522A5-32211	149	523W0-52231	146	524T1-64311	177	524T3-86201	207
522A5-32401	149	523W0-52231	143A	524T1-64311	188	524T3-86211	207
522A5-32421	149	523W0-52301	145	524T1-64311	206	524T3-86221	207
522A7-12051	17	523W0-52311	145	524T1-64311	212	524T3-86231	207
522A7-12051	17	523W0-52321	145	524T1-72001	15	524T3-86241	207
522A7-12051	17	523W0-52331	145	524T1-94001	168	524T3-86251	207
522A7-12301	17	523W0-52341	145	524T1-94011	168	524T3-86261	207
522A7-12301	17	523W0-52351	145	524T1-94021	168	524T3-86271	207
522A7-12301	17	523W0-52361	145	524T2-72301	138	524T3-86281	207
523U0-50121	142	523W0-52371	145	524T2-72311	138	524T3-86291	207
523U0-52311	142	523W0-52381	145	524T2-74001	152	524T3-86301	207
523U0-52321	142	523W0-52391	145	524T2-74001	157	524T3-86311	207
523U0-52331	142	523W0-52401	145	524T2-74001	162	524T7-32001	152
523U0-52361	142	523W0-52411	145	524T2-74001	167	524T7-32001	157
523U0-52371	142	523W0-52421	145	524T2-74001	177	524T7-32011	152
523U0-52381	142	523W0-52431	145	524T2-74001	188	524T7-32011	157
523U0-52381	142	523W0-52441	145	524T2-74001	206	524T7-32021	152
523U0-52392	142	523W0-52451	145	524T2-74001	212	524T7-32021	157
523U0-52402	142	523W0-52461	145	524T2-82011	138	524T7-32101	177
523U0-52411	142	523W0-52471	145	524T2-82041	138	524T7-32111	177
523U0-52431	142	523W0-52481	145	524T2-82071	138	524T7-32121	177
523U0-52441	142	523W0-52491	145	524T2-82071	138	524W0-82131	15
523U0-52451	142	523W0-52501	145	524T2-82081	138	524W0-82131	16
523U0-52461	142	523W0-52511	145	524T2-82081	138	524W1-92171	85
523W0-50101	143	523W0-52521	145	524T3-84031	207	524W1-92181	85
523W0-50101	143A	523W0-52531	145	524T3-84031	213	524W1-92411	85
523W0-50201	143	523W0-52541	145	524T3-86001	153	524W1-92421	85
523W0-50201	143A	523W0-52551	145	524T3-86002	153	524W2-40121	71
523W0-50211	143	523W0-52561	145	524T3-86011	153	524W2-40131	71
523W0-50212	143A	523W0-52571	145	524T3-86012	153	524W2-40202	71
523W0-52001	143	523W0-52581	145	524T3-86021	153	524W2-40202	84
523W0-52002	143A	523W0-52591	145	524T3-86022	153	524W2-40211	84
523W0-52011	143	523W2-70011	12	524T3-86031	153	524W2-40252	66
523W0-52011	143A	523W7-52001	25	524T3-86032	153	524W2-40252	67
523W0-52021	143	523W7-52001	25	524T3-86041	153	524W2-40401	84
523W0-52021	144	52319-29071	134	524T3-86042	153	524W2-40531	66
523W0-52021	143A	524T1-62001	152	524T3-86051	153	524W2-42101	71
523W0-52031	144	524T1-62001	157	524T3-86052	153	524W2-42261	84
523W0-52041	144	524T1-62011	152	524T3-86061	153	524W2-42351	84
523W0-52051	144	524T1-62011	157	524T3-86062	153	524W2-42401	71
523W0-52061	144	524T1-62051	152	524T3-86071	153	524W2-42491	71
523W0-52071	143	524T1-62051	157	524T3-86072	153	524W2-42531	66
523W0-52071	145	524T1-62101	206	524T3-86081	153	524W2-42541	127
523W0-52081	143	524T1-62111	206	524T3-86082	153	524W2-42551	127
523W0-52091	143	524T1-62151	206	524T3-86091	153	524W2-42601	67
523W0-52101	143	524T1-62201	177	524T3-86092	153	524W2-42611	67
523W0-52101	143A	524T1-62211	177	524T3-86101	153	524W2-42621	67
523W0-52111	143	524T1-62251	177	524T3-86102	153	524W2-42651	67

Part No.	Fig.No.	Part No.	Fig.No.	Part No.	Fig.No.	Part No.	Fig.No.
524W2-42661	67	524W3-86151	181	524W3-87032	178	524W5-42061	190
524W2-42671	67	524W3-86161	181	524W3-87041	178	524W7-12001	97
524W2-42701	127	524W3-86201	181	524W3-87042	178	524W7-12301	26
524W2-60201	61A	524W3-86211	181	524W3-87051	178	524W7-12301	26
524W2-60211	61A	524W3-86221	181	524W3-87052	178	524W7-40101	77
524W2-72151	138	524W3-86231	181	524W3-87061	178	524W7-40101	77
524W2-72161	138	524W3-86241	181	524W3-87062	178	524W7-40201	77
524W2-72301	138	524W3-86251	181	524W3-87071	178	524W7-40201	77
524W2-72311	138	524W3-86261	181	524W3-87072	178	524W7-52001	24
524W2-72401	1	524W3-86271	181	524W3-87081	178	524W7-52021	24
524W2-82011	138	524W3-86281	181	524W3-87082	178	524W7-52031	58
524W2-82041	138	524W3-86291	181	524W3-87091	178	524W7-62141	5
524W2-82071	138	524W3-86301	181	524W3-87092	178	52430-52551	146
524W2-82071	138	524W3-86311	181	524W3-87101	178	52580-53031	143
524W2-82081	138	524W3-86321	181	524W3-87102	178	52580-53031	143A
524W2-82081	138	524W3-86331	181	524W3-87111	178	52657-22051	150
524W2-82101	138	524W3-86341	181	524W3-87112	178	52672-72122	138
524W3-02101	138	524W3-86351	181	524W3-87121	178	52672-72122	138
524W3-82101	138	524W3-86361	181	524W3-87122	178	52672-82062	138
524W3-82111	138	524W3-86401	181	524W3-87131	178	52672-82072	138
524W3-82121	138	524W3-86411	181	524W3-87132	178	52672-82251	138
524W3-82131	138	524W3-86421	181	524W3-87141	178	528C1-62001	162
524W3-82141	138	524W3-86431	181	524W3-87142	178	528C1-62001	167
524W3-82151	138	524W3-86441	181	524W3-87151	178	528C1-62011	162
524W3-82161	138	524W3-86451	181	524W3-87152	178	528C1-62011	167
524W3-82171	138	524W3-86461	181	524W3-87161	178	528C1-62051	162
524W3-82181	138	524W3-86471	181	524W3-87162	178	528C1-62051	167
524W3-82191	138	524W3-86481	181	524W4-10101	134	528C1-62101	212
524W3-82301	178	524W3-86491	181	524W4-10101	135	528C1-62111	212
524W3-82311	178	524W3-86501	181	524W4-10201	135	528C1-62151	212
524W3-82321	178	524W3-86511	181	524W4-10301	135	528C1-62201	188
524W3-82331	178	524W3-86521	181	524W4-10401	135	528C1-62211	188
524W3-82341	178	524W3-86531	181	524W4-12001	65	528C1-62251	188
524W3-82351	178	524W3-86541	181	524W4-12001	65	528C2-72161	138
524W3-82361	178	524W3-86551	181	524W4-12001	65	528C2-72301	138
524W3-82371	178	524W3-86561	181	524W4-12081	135	528C2-72311	138
524W3-82381	178	524W3-86601	181	524W4-12092	135	528C2-82011	138
524W3-82391	178	524W3-86611	181	524W4-12121	134	528C2-82041	138
524W3-82401	178	524W3-86621	181	524W4-12141	135	528C2-82071	138
524W3-82411	178	524W3-86631	181	524W4-12151	135	528C2-82071	138
524W3-82421	178	524W3-86641	181	524W5-12091	148	528C2-82081	138
524W3-82431	178	524W3-86651	181	524W5-12091	28	528C2-82081	138
524W3-82441	178	524W3-86661	181	524W5-12091	29	528C3-86001	163
524W3-82451	178	524W3-86671	181	524W5-12091	29	528C3-86002	163
524W3-82461	178	524W3-86681	181	524W5-12091	30	528C3-86011	163
524W3-86001	181	524W3-86691	181	524W5-12091	31	528C3-86012	163
524W3-86011	181	524W3-86701	181	524W5-12091	32	528C3-86021	163
524W3-86021	181	524W3-86711	181	524W5-12091	33	528C3-86022	163
524W3-86031	181	524W3-86721	181	524W5-12091	85	528C3-86031	163
524W3-86041	181	524W3-86731	181	524W5-12091	86	528C3-86032	163
524W3-86051	181	524W3-86741	181	524W5-13051	85	528C3-86041	163
524W3-86061	181	524W3-86751	181	524W5-32091	148	528C3-86042	163
524W3-86071	181	524W3-86761	181	524W5-34121	149	528C3-86051	163
524W3-86081	181	524W3-87001	178	524W5-34221	149	528C3-86052	163
524W3-86091	181	524W3-87002	178	524W5-34231	149	528C3-86061	163
524W3-86101	181	524W3-87011	178	524W5-42061	154	528C3-86062	163
524W3-86111	181	524W3-87012	178	524W5-42061	159	528C3-86071	163
524W3-86121	181	524W3-87021	178	524W5-42061	164	528C3-86072	163
524W3-86131	181	524W3-87022	178	524W5-42061	169	528C3-86081	163
524W3-86141	181	524W3-87031	178	524W5-42061	179	528C3-86082	163

Part No.	Fig.No.	Part No.	Fig.No.	Part No.	Fig.No.	Part No.	Fig.No.
528C3-86091	163	528C3-86561	189	529F3-82161	138	530C5-33071	149
528C3-86092	163	528C3-86562	189	529F3-82171	138	530C5-33081	149
528C3-86101	163	528C6-80001	76	529F3-82201	138	530C5-33091	149
528C3-86102	163	528C6-80011	76	529F3-82221	138	530C5-33131	149
528C3-86111	163	528C6-80021	82	529F3-82241	138	530C5-33141	147
528C3-86112	163	528C6-80031	82	529F3-82251	138	530C5-33181	30
528C3-86121	163	528C6-80041	82	529F3-82381	138	530C5-33211	30
528C3-86122	163	528C6-80051	76	529F5-42041	141	530C5-42041	141
528C3-86131	163	528C6-82001	76	529F5-42061	141	530C6-22171	94
528C3-86132	163	528C6-82011	76	529F7-22001	35	530C6-22181	94
528C3-86141	163	528C6-82021	82	529F7-62401	149	530C6-52181	7
528C3-86142	163	528C6-82031	82	529F7-62421	149	530C6-52181	8
528C3-86151	163	528C6-82041	76	529F7-62431	149	530C6-52191	7
528C3-86152	163	528C7-32001	162	529F7-62701	150	530C6-52191	8
528C3-86161	163	528C7-32001	167	530C0-62011	3	530C7-22051	35
528C3-86162	163	528C7-32011	162	530C0-62021	3	530C7-52001	25
528C3-86201	213	528C7-32011	167	530C1-42001	31	530C7-62901	150
528C3-86211	213	528C7-32021	162	530C1-42001	32	530C8-92001	33
528C3-86221	213	528C7-32021	167	530C1-42051	31	530C8-92001	33
528C3-86231	213	528C7-32101	188	530C1-42051	32	530C9-92001	22
528C3-86241	213	528C7-32111	188	530C1-42201	31	530C9-92001	28
528C3-86251	213	528C7-32121	188	530C1-42201	32	53030-52321	146
528C3-86261	213	528C7-40301	80	530C2-60161	63	53030-52351	146
528C3-86271	213	528C7-52031	59	530C2-60162	63	531A0-50111	142
528C3-86281	213	528F0-52011	145A	530C2-60171	63	531A0-52041	142
528C3-86291	213	528F0-52221	143A	530C2-60172	63	531A0-52041	142
528C3-86301	213	528F0-52221	145A	530C2-60181	63	531A0-52521	22
528C3-86311	213	528F0-52251	143A	530C2-60191	63	531A0-52521	30
528C3-86401	189	528F0-52461	143A	530C2-62151	64	531A0-52641	142
528C3-86402	189	528F0-52501	145A	530C2-72401	138	531A0-52651	142
528C3-86411	189	528F0-52511	145A	530C2-72401	138	532A2-72731	138
528C3-86412	189	528F0-52521	145A	530C2-82201	138	533A0-50351	143
528C3-86421	189	528F0-52531	145A	530C3-02101	138	533A0-50351	143A
528C3-86422	189	528F0-52541	145A	530C3-40501	1	533A0-52002	97
528C3-86431	189	528F0-52551	145A	530C3-82201	100	533A0-52002	143A
528C3-86432	189	528F0-52561	145A	530C3-82361	18	533A0-52121	143
528C3-86441	189	528F0-52571	145A	530C3-82361	19	533A0-52121	143A
528C3-86442	189	528F0-52581	145A	530C3-82361	20	533A0-52141	143
528C3-86451	189	528F0-52591	145A	530C3-82511	138	533A0-52141	143A
528C3-86452	189	528F0-52601	145A	530C3-82521	138	53320-52322	143
528C3-86461	189	528F3-82001	138	530C3-82531	138	53320-52322	143A
528C3-86462	189	528F3-82011	138	530C3-82541	138	53320-52331	143
528C3-86471	189	528F3-82021	138	530C3-82551	138	53320-52331	143A
528C3-86472	189	528F3-82031	138	530C3-82561	138	53320-55001	145A
528C3-86481	189	529F1-42001	85	530C3-82571	138	53320-55071	145A
528C3-86482	189	529F1-42201	33	530C3-82581	138	53320-55131	144
528C3-86491	189	529F3-82001	138	530C3-82591	138	53320-55181	144
528C3-86492	189	529F3-82011	138	530C5-30551	149	53320-55201	145A
528C3-86501	189	529F3-82021	138	530C5-32061	148	53320-55221	145A
528C3-86502	189	529F3-82031	138	530C5-32151	148	53320-55231	145A
528C3-86511	189	529F3-82061	138	530C5-32511	149	53320-55241	145A
528C3-86512	189	529F3-82071	138	530C5-32531	149	53320-55251	145A
528C3-86521	189	529F3-82081	138	530C5-32541	149	53320-55281	145A
528C3-86522	189	529F3-82091	138	530C5-32551	149	53320-55331	145A
528C3-86531	189	529F3-82101	138	530C5-32831	149	53320-55381	145A
528C3-86532	189	529F3-82101	207	530C5-33021	149	53320-55411	144
528C3-86541	189	529F3-82101	213	530C5-33031	149	53320-55421	144
528C3-86542	189	529F3-82111	138	530C5-33041	149	53320-55431	144
528C3-86551	189	529F3-82111	213	530C5-33051	149	53320-55441	144
528C3-86552	189	529F3-82132	138	530C5-33061	149	53320-55451	144

Part No.	Fig.No.	Part No.	Fig.No.	Part No.	Fig.No.	Part No.	Fig.No.
53320-55461	144	534A5-30541	149	535C0-82071	15	535C5-00101	85
53320-55471	144	534A5-30551	149	535C0-82071	16	535C5-00211	85
53320-55481	144	534A5-32061	148	535C0-82081	15	535C5-00311	85
53320-55491	144	534A5-32511	149	535C0-82101	15	535C5-00421	85
53320-55501	144	534A5-32561	24	535C0-82101	16	535C5-00431	85
53320-55511	144	534A5-32561	25	535C0-82151	15	535C5-02401	85
53320-55521	144	534A5-32631	148	535C0-82161	15	535C5-20301	86
53320-55541	144	534A5-32801	149	535C0-82171	15	535C5-20351	86
53320-55551	144	534A5-33001	149	535C0-82201	15	535C5-30001	149
53320-55561	144	534A5-33121	149	535C0-82211	15	535C5-30002	149
53320-55581	144	534A7-22201	35	535C0-92101	85	535C5-30101	149
53320-55591	144	534A7-22211	35	535C0-92301	85	535C5-30102	149
53320-55601	144	534A7-50601	40	535C0-92401	85	535C5-30201	148
53320-55612	144	534A9-22001	174	535C0-92501	85	535C5-30211	148
53320-55621	144	534A9-22001	201	535C1-32101	34	535C5-30241	102
53320-55631	144	534A9-22001	220	535C1-42101	31	535C5-30241	102
53320-55641	144	534A9-22001	154A	535C1-42101	32	535C5-30251	148
53320-55651	144	534A9-22001	164A	535C1-42121	31	535C5-30261	148
53320-55671	144	534A9-22001	179A	535C1-42121	31	535C5-30301	149
53320-55761	144	534A9-22001	190A	535C1-42121	32	535C5-30311	149
534A2-40202	66	534A9-22001	208A	535C1-70101	13	535C5-30431	35
534A2-42001	66	534A9-22001	214A	535C1-70201	13	535C5-30431	36
534A2-42012	66	534A9-22011	174	535C1-92131	101	535C5-30501	149
534A2-42021	66	534A9-22011	201	535C1-92181	101	535C5-30511	149
534A2-42031	66	534A9-22011	220	535C1-92191	101	535C5-30512	149
534A2-72701	138	534A9-22011	154A	535C1-92192	101	535C5-30521	149
534A3-82311	138	534A9-22011	164A	535C2-42001	127	535C5-30531	149
534A3-82331	138	534A9-22011	179A	535C2-42001	127	535C5-30541	149
534A3-82341	138	534A9-22011	190A	535C2-42011	127	535C5-30551	149
534A3-82421	138	534A9-22011	208A	535C2-42011	127	535C5-30601	148
534A3-82441	138	534A9-22011	214A	535C2-60301	64	535C5-32061	148
534A3-82451	138	534A9-22101	174	535C2-60302	64	535C5-32081	148
534A4-22001	174	534A9-22101	201	535C2-60401	100	535C5-32141	149
534A4-22001	201	534A9-22101	220	535C2-62001	64	535C5-32151	149
534A4-22001	220	534A9-22101	154A	535C2-62002	64	535C5-32161	149
534A4-22001	154A	534A9-22101	179A	535C3-22101	9	535C5-32171	149
534A4-22001	164A	534A9-22101	208A	535C3-40251	1	535C5-32301	16
534A4-22001	179A	534A9-22301	174	535C3-40252	1	535C5-32451	148
534A4-22001	190A	534A9-22301	201	535C3-82001	18	535C5-32451	149
534A4-22001	208A	534A9-22301	220	535C3-82001	19	535C5-32561	149
534A4-22001	214A	534A9-22301	154A	535C3-82002	18	535C5-32571	149
534A4-22011	174	534A9-22301	164A	535C3-82002	19	535C5-32801	149
534A4-22011	201	534A9-22301	179A	535C3-82031	7	535C5-32811	149
534A4-22011	220	534A9-22301	190A	535C3-82031	7	535C5-32821	149
534A4-22011	154A	534A9-22301	208A	535C3-83011	7	535C5-33001	149
534A4-22011	164A	534A9-22301	214A	535C3-92101	101	535C5-33011	149
534A4-22011	179A	534A9-92131	29	535C3-92111	101	535C5-33101	149
534A4-22011	190A	534A9-92131	29	535C4-12001	18	535C5-33111	149
534A4-22011	208A	53450-53002	142	535C4-12001	19	535C5-33121	149
534A4-22011	214A	53450-53021	142	535C4-12101	134	535C5-40001	141
534A4-22101	174	53450-53091	142	535C4-12111	134	535C5-40101	141
534A4-22101	201	53450-53101	142	535C4-12151	101	535C5-40191	141
534A4-22101	220	53450-53111	142	535C4-12161	101	535C5-40191	141
534A4-22101	154A	53450-53171	142	535C4-90011	100	535C5-40201	141
534A4-22101	179A	535C0-60001	3	535C4-90101	85	535C5-40201	141
534A4-22101	208A	535C0-82001	15	535C4-90211	85	535C5-40291	141
534A5-15001	85	535C0-82001	16	535C4-90311	85	535C5-40291	141
534A5-15002	85	535C0-82021	15	535C4-90421	85	535C5-40301	141
534A5-15041	85	535C0-82031	15	535C4-90431	85	535C5-40301	141
534A5-15042	85	535C0-82041	15	535C4-92401	85	535C5-40391	141

PARTS NUMBER INDEX

Part No.	Fig.No.	Part No.	Fig.No.	Part No.	Fig.No.	Part No.	Fig.No.
535C5-40401	141	535C7-62081	5	535C9-90111	85	535H2-82071	138
535C5-42131	141	535C7-62091	5	535C9-90111	85	535H2-82081	138
535C5-42131	141	535C7-62121	150	535C9-92001	22	535H2-82081	138
535C5-42131	141	535C7-62131	151	535C9-92001	28	535H3-80301	88
535C5-42141	141	535C7-62161	150	535C9-92011	29	535H3-80401	40
535C5-42151	141	535C7-62171	151	535C9-92011	29	535H3-80501	40
535C5-42161	141	535C7-62191	151	535C9-92051	29	535H3-82011	40
535C5-42231	141	535C7-62241	150	535C9-92051	29	535H3-82141	88
535C5-42231	141	535C7-62251	150	535E1-42001	31	535H3-82171	88
535C5-42431	141	535C7-62261	150	535E1-42001	31	535H3-82201	40
535C5-50131	85	535C7-62271	150	535E1-42001	31	535H3-82211	40
535C5-50141	85	535C7-62281	151	535E1-42001	32	535H3-82261	40
535C5-50311	85	535C7-62301	102	535E2-70101	1	535H3-82301	138
535C5-50361	85	535C7-62331	102	535E2-70102	1	535H3-82311	138
535C6-20101	94	535C7-62441	151	535E2-70171	85	535H3-82321	138
535C6-20201	17	535C7-62451	102	535E2-72001	97	535H3-82361	138
535C6-22051	26	535C7-62461	102	535E2-72031	11	535H3-82371	138
535C6-22051	26	535C7-62481	150	535E2-72051	11	535H3-82381	138
535C6-22101	24	535C7-62491	150	535E2-72071	11	535H3-82391	138
535C6-22101	26	535C7-62551	7	535E2-72071	12	535H3-82401	138
535C6-22101	26	535C8-92051	33	535E2-72151	3	535H3-82411	138
535C6-50101	7	535C8-92101	33	535E2-72201	19	535H3-82421	138
535C6-50101	8	535C8-92101	33	535E2-72203	19	535H3-82431	138
535C6-50111	7	535C8-92101	33	535E2-72211	19	535H3-82441	138
535C6-50111	8	535C8-92101	33	535E2-72211	20	535H3-82451	138
535C6-50121	7	535C8-92111	33	535E2-72421	11	535H3-82461	138
535C6-50121	8	535C8-92111	33	535E3-40251	1	535H3-82471	138
535C6-52001	7	535C9-12001	85	535E3-40252	1	535H3-82481	138
535C6-52002	7	535C9-12011	85	535E3-80001	42	535H3-82491	138
535C6-60101	1	535C9-22101	164A	535E3-80001	46	535H3-82501	138
535C6-60102	1	535C9-22101	190A	535E3-82261	138	535H3-82511	138
535C6-60151	1	535C9-22101	214A	535E3-82271	138	535H3-91001	173
535C6-60152	1	535C9-22111	164A	535E3-82291	138	535H3-91002	173
535C7-21211	35	535C9-22111	190A	535E3-82311	138	535H3-91011	173
535C7-21211	36	535C9-22111	214A	535E6-60101	1	535H3-91012	173
535C7-22002	35	535C9-22301	174	535E6-60151	1	535H3-91021	173
535C7-22002	36	535C9-22301	201	535E6-60201	1	535H3-91022	173
535C7-22041	103	535C9-22301	220	535E6-90201	39	535H3-91031	173
535C7-22051	103	535C9-22301	154A	535E6-92001	39	535H3-91032	173
535C7-22071	103	535C9-22301	164A	535E6-92101	39	535H3-91041	173
535C7-22091	35	535C9-22301	179A	535E7-22051	103	535H3-91042	173
535C7-22091	36	535C9-22301	190A	535G2-72201	19	535H3-91051	173
535C7-22111	150	535C9-22301	208A	535G2-72203	19	535H3-91052	173
535C7-22111	35	535C9-22301	214A	535H0-82101	101	535H3-91061	173
535C7-42001	72	535C9-22401	174	535H0-82101	102	535H3-91062	173
535C7-42011	72	535C9-22401	201	535H1-61301	199	535H3-91071	173
535C7-42021	72	535C9-22401	220	535H1-61311	199	535H3-91072	173
535C7-42031	72	535C9-22401	154A	535H1-70101	13	535H3-91081	173
535C7-42041	72	535C9-22401	164A	535H1-70201	13	535H3-91082	173
535C7-42041	72	535C9-22401	179A	535H1-92151	101	535H3-91091	173
535C7-42051	72	535C9-22401	190A	535H1-92201	101	535H3-91092	173
535C7-42051	72	535C9-22401	208A	535H1-92202	101	535H3-91101	173
535C7-52101	25	535C9-22401	214A	535H2-42001	127	535H3-91102	173
535C7-52111	24	535C9-60001	85	535H2-42011	127	535H3-91111	173
535C7-52111	25	535C9-62001	147	535H2-71001	199	535H3-91112	173
535C7-60411	150	535C9-90111	85	535H2-72101	138	535H3-91121	173
535C7-60421	150	535C9-90111	85	535H2-72111	138	535H3-91122	173
535C7-60431	150	535C9-90111	85	535H2-82011	138	535H3-91131	173
535C7-62001	151	535C9-90111	85	535H2-82041	138	535H3-91132	173
535C7-62021	5	535C9-90111	85	535H2-82071	138	535H3-91141	173

Part No.	Fig.No.	Part No.	Fig.No.	Part No.	Fig.No.	Part No.	Fig.No.
535H3-91142	173	535L0-52001	101	53652-82352	138	53675-55051	129
535H3-91151	173	535L0-52051	143	53652-82372	138	53675-55051	130
535H3-91152	173	535L0-52051	97	53652-82373	138	53911-12011	5
535H3-91161	173	535L0-52111	20	53652-82391	138	53916-80101	75
535H3-91162	173	535L0-52251	143A	53652-82401	138	53916-80201	75
535H3-91201	219	535L0-52261	143A	53652-82541	138	53916-80601	78
535H3-91211	219	535L0-52271	143A	53652-82551	138	53916-80701	78
535H3-91221	219	535L0-52301	142	53653-20201	9	53916-82521	78
535H3-91231	219	535L0-52351	142	53653-22011	9	53916-82531	78
535H3-91241	219	535L0-52401	142	53653-22061	9	53917-40101	77
535H3-91251	219	535L0-52451	142	53653-22071	9	53917-40201	77
535H3-91261	219	535L0-52451	142	53656-82041	79	53917-40301	77
535H3-91271	219	535L0-52461	142	53656-82041	80	53917-40301	77
535H3-91281	219	535L0-52471	142	53656-82041	81	53917-42221	77
535H3-91291	219	535L0-52511	142	53656-82041	82	53917-42221	77
535H3-91301	219	535L0-52521	142	53656-82051	79	54230-52171	146
535H3-91311	219	535L0-52531	142	53656-82051	80	54238-43051	181
535H3-91401	200	535L0-52541	142	53656-82051	81	54238-43051	186
535H3-91402	200	535L2-72021	6	53656-82051	82	54238-43051	192
535H3-91411	200	535L2-72031	6	53656-82061	79	54238-43051	197
535H3-91412	200	535L2-72051	8	53656-82061	80	54238-43051	204
535H3-91421	200	535L2-72111	12	53656-82061	81	54238-43051	210
535H3-91422	200	535L2-72201	20	53656-82061	82	54240-52021	143
535H3-91431	200	535L2-72201	20	53657-12101	18	54240-52021	143A
535H3-91432	200	535L2-72203	20	53657-12101	19	54240-52021	143A
535H3-91441	200	535L2-72203	20	53657-12111	22	54352-72051	6
535H3-91442	200	535L3-40251	2	53657-12301	20	54352-72061	6
535H3-91451	200	535L3-40501	2	53658-43001	181	54356-80201	75
535H3-91452	200	535L3-80001	42	53658-43001	186	54356-80301	75
535H3-91461	200	535L3-80001	46	53658-43001	192	54356-80301	76
535H3-91462	200	535L3-82001	20	53658-43001	197	54356-80401	81
535H3-91471	200	535L3-82002	20	53658-43001	204	54356-80502	73
535H3-91472	200	535L3-82031	8	53658-43001	210	54356-80502	74
535H3-91481	200	535L3-82031	8	53658-43011	181	54356-80502	77
535H3-91482	200	535L3-83011	8	53658-43011	186	54356-80651	79
535H3-91491	200	535L5-30001	149	53658-43011	192	54356-80651	80
535H3-91492	200	535L5-30002	149	53658-43011	197	54356-80651	81
535H3-91501	200	535L5-30101	149	53658-43011	204	54356-80651	82
535H3-91502	200	535L5-30102	149	53658-43011	210	54356-80701	73
535H3-91511	200	535L6-52001	8	53658-43021	181	54356-80701	73
535H3-91512	200	535L6-52002	8	53658-43021	186	54356-80701	74
535H3-91521	200	535L7-22001	36	53658-43021	192	54356-80701	74
535H3-91522	200	535L7-22011	36	53658-43021	197	54356-80801	73
535H3-91531	200	535L7-22051	36	53658-43021	204	54356-80801	73
535H3-91532	200	535L8-80101	17	53658-43021	210	54356-80801	74
535H3-91541	200	535M2-72201	20	53658-43031	181	54356-80801	74
535H3-91542	200	535M2-72203	20	53658-43031	186	54356-80902	77
535H3-91551	200	535M2-72211	19	53658-43031	192	54356-81301	73
535H3-91552	200	535M2-72211	20	53658-43031	197	54356-81301	74
535H3-91561	200	535N3-80301	88	53658-43031	204	54356-81301	77
535H3-91562	200	535N3-80401	40	53658-43031	210	54356-81401	75
535H3-92101	101	535N3-80501	40	53671-92821	141	54356-81401	75
535H3-92111	101	535N3-82011	40	53675-54101	156	54356-81501	75
535H3-92121	101	535N3-82141	88	53675-54101	161	54356-81501	75
535H5-82331	138	53651-12201	143	53675-54101	166	54356-81501	76
535H5-82351	138	53651-12201	143A	53675-54101	171	54356-82011	75
535H7-62081	5	53651-12511	4	53675-54101	176	54356-82011	76
535L0-50101	142	53652-82011	138	53675-54101	211	54356-82021	75
535L0-50111	142	53652-82032	138	53675-54101	217	54356-82021	76
535L0-50201	143	53652-82033	138	53675-54101	223	54356-82041	73

PARTS NUMBER INDEX

Part No.	Fig.No.	Part No.	Fig.No.	Part No.	Fig.No.	Part No.	Fig.No.
54356-82041	73	55787-22231	37	55953-83621	138	89140-00006	66
54356-82041	74	55787-22241	37	55953-83651	138	89140-00006	66
54356-82041	74	55787-22251	37	55953-83821	138	89140-00006	66
54356-82071	79	55787-22261	37	55953-83851	138	89140-00009	114
54356-82071	80	55787-22271	37	55955-42031	141	89140-00009	114
54356-82071	81	55787-22281	37	55955-42031	141	89140-00009	115
54356-82071	82	55787-22291	37	55955-42031	141	89140-00009	115
54356-82101	75	55787-22301	37	55955-42031	141	89140-00010	114
54356-82101	75	55787-22311	37	55955-42052	141	89140-00010	115
54356-82101	76	55787-22321	37	55955-42151	141	97103-35431	181
54356-82111	75	55787-22331	37	55956-80201	76	97103-35431	186
54356-82111	75	55787-22341	37	55956-80211	76	97103-35431	192
54356-82111	76	55787-22351	37	55956-80221	76	97103-35431	197
54357-40601	77	55787-22361	37	55956-80301	78	97103-35431	204
54357-40702	77	55787-22371	37	55956-80311	78		
54357-52001	24	55787-22381	37	55956-80322	78		
54357-52011	24	55787-22391	37	55956-80401	82		
54357-52021	24	55787-22401	37	55956-80411	82		
54458-42011	185	55792-52601	23	55956-80421	82		
54458-42011	196	55792-52601	40	55957-22121	150		
54515-32151	149	55792-52611	23	55957-22121	35		
54515-32171	149	55792-52611	40	56110-63521	150		
54602-42102	84	55792-52621	23	56110-63521	35		
54602-42142	84	55792-52621	40	56601-62451	37		
54602-42161	84	55792-52641	23	57042-72091	40		
54602-42181	71	55792-52641	40	571A2-72201	138		
54602-42271	71	55807-62111	151	571A3-82361	138		
54606-80611	81	55807-62121	151	571A6-82081	82		
55530-52211	142	55807-62231	150	571F6-82181	82		
55530-52221	142	55807-62241	134	571F6-82191	82		
55530-52231	142	55807-62241	150	572E5-52161	148		
55530-52241	142	55807-62281	150	57246-04101	129		
55592-82001	138	55807-62301	150	57246-04101	129		
55595-43632	141	55807-62331	150	57246-04101	130		
55595-43632	149	55807-62341	150	57246-04101	130		
556C9-92091	201	55807-62381	134	57830-13871	149		
556C9-92091	85	55807-62381	151	57830-13891	149		
556C9-92091	85	55811-42001	143	58490-52511	150		
55777-12011	18	55811-42001	143A	62014-12271	95		
55777-12011	19	55815-32271	141	62459-23371	202		
55781-10101	4	55817-12051	18	63110-12061	42		
55781-12011	4	55817-12051	19	63110-18901	137		
55781-12021	4	55952-18021	92	63110-18911	138		
55781-12031	4	55952-18021	93	635H0-10011	202		
55785-12201	85	55952-72051	10	635H0-10051	202		
55785-30281	149	55953-02021	138	63700-13101	115		
55785-32161	149	55953-02032	138	63713-42341	84		
55785-32171	149	55953-80101	79	73452-42181	18		
55785-32181	149	55953-80101	80	73452-42181	19		
55785-32191	149	55953-80101	80	73452-42181	20		
55785-32201	149	55953-80451	81	78467-14911	37		
55785-42051	141	55953-82651	138	80110-00410	143		
55785-42051	141	55953-82851	138	80110-00410	143A		
55785-42101	141	55953-83021	138	80110-00628	66		
55785-42101	148	55953-83021	138	80430-00004	143		
55787-20101	35	55953-83021	138	80430-00004	143A		
55787-20101	37	55953-83051	138	80430-00006	66		
55787-22201	37	55953-83251	138	89140-00006	129		
55787-22211	37	55953-83421	138	89140-00006	129		
55787-22221	37	55953-83451	138	89140-00006	130		

No.PF-35AE

平成10年　7月　発行
平成11年　5月　改訂
平成11年　7月　改訂
平成12年　1月　改訂
平成15年　5月　改訂

TCM株式会社
本　社　大阪市西区京町堀1－15－10
発行　TCMテクノ株式会社

ISSUED:JULY,1998
REVISED:MAY,1999
REVISED:JULY,1999
REVISED:JANUARY,2000
REVISED:MAY,2003

TCM CORPORATION
INTERNATIONAL MARKETING DIVISION : 1-15-5, Nishi－shimbashi, Minato－ku, Tokyo
105－0003, Japan
FAX : Japan +81－3－35918152, 3－35918153

無断で転載・複製を禁ず
All rights reserved.

SA－1505001(H)　Printed in Japan

TCM株式会社